User's Manual

16

RL78/ F13, F14

User's Manual: Hardware

16-Bit Single-Chip Microcontrollers

All information contained in these materials, including products and product specifications, represents information on the product at the time of publication and is subject to change by Renesas Electronics Corp. without notice. Please review the latest information published by Renesas Electronics Corp. through various means, including the Renesas Electronics Corp. website (http://www.renesas.com).

Renesas Electronics
www.renesas.com

Rev.2.20 Sep 2023

Notice

1. Descriptions of circuits, software and other related information in this document are provided only to illustrate the operation of semiconductor products and application examples. You are fully responsible for the incorporation or any other use of the circuits, software, and information in the design of your product or system. Renesas Electronics disclaims any and all liability for any losses and damages incurred by you or third parties arising from the use of these circuits, software, or information.
2. Renesas Electronics hereby expressly disclaims any warranties against and liability for infringement or any other claims involving patents, copyrights, or other intellectual property rights of third parties, by or arising from the use of Renesas Electronics products or technical information described in this document, including but not limited to, the product data, drawings, charts, programs, algorithms, and application examples.
3. No license, express, implied or otherwise, is granted hereby under any patents, copyrights or other intellectual property rights of Renesas Electronics or others.
4. You shall be responsible for determining what licenses are required from any third parties, and obtaining such licenses for the lawful import, export, manufacture, sales, utilization, distribution or other disposal of any products incorporating Renesas Electronics products, if required.
5. You shall not alter, modify, copy, or reverse engineer any Renesas Electronics product, whether in whole or in part. Renesas Electronics disclaims any and all liability for any losses or damages incurred by you or third parties arising from such alteration, modification, copying or reverse engineering.
6. Renesas Electronics products are classified according to the following two quality grades: “Standard” and “High Quality”. The intended applications for each Renesas Electronics product depends on the product’s quality grade, as indicated below.
   "Standard": Computers; office equipment; communications equipment; test and measurement equipment; audio and visual equipment; home electronic appliances; machine tools; personal electronic equipment; industrial robots; etc.
   "High Quality": Transportation equipment (automobiles, trains, ships, etc.); traffic control (traffic lights); large-scale communication equipment; key financial terminal systems; safety control equipment; etc.
   Unless expressly designated as a high reliability product or a product for harsh environments in a Renesas Electronics data sheet or other Renesas Electronics document, Renesas Electronics products are not intended or authorized for use in products or systems that may pose a direct threat to human life or bodily injury (artificial life support devices or systems; surgical implantations; etc.), or may cause serious property damage (space system; undersea repeaters; nuclear power control systems; aircraft control systems; key plant systems; military equipment; etc.). Renesas Electronics disclaims any and all liability for any damages or losses incurred by you or any third parties arising from the use of any Renesas Electronics product that is inconsistent with any Renesas Electronics data sheet, user’s manual or other Renesas Electronics document.
7. No semiconductor product is absolutely secure. Notwithstanding any security measures or features that may be implemented in Renesas Electronics hardware or software products, Renesas Electronics shall have absolutely no liability arising out of any vulnerability or security breach, including but not limited to any unauthorized access to or use of a Renesas Electronics product or a system that uses a Renesas Electronics product. RENESAS ELECTRONICS DOES NOT WARRANT OR GUARANTEE THAT RENESAS ELECTRONICS PRODUCTS, OR ANY SYSTEMS CREATED USING RENESAS ELECTRONICS PRODUCTS WILL BE INVULNERABLE OR FREE FROM CORRUPTION, ATTACK, VIRUSES, INTERFERENCE, HACKING, DATA LOSS OR THEFT, OR OTHER SECURITY INTRUSION (“Vulnerability Issues”). RENESAS ELECTRONICS DISCLAIMS ANY AND ALL RESPONSIBILITY OR LIABILITY ARISING FROM OR RELATED TO ANY VULNERABILITY ISSUES. FURTHERMORE, TO THE EXTENT PERMITTED BY APPLICABLE LAW, RENESAS ELECTRONICS DISCLAIMS ANY AND ALL WARRANTIES, EXPRESS OR IMPLIED, WITH RESPECT TO THIS DOCUMENT AND ANY RELATED OR ACCOMPANYING SOFTWARE OR HARDWARE, INCLUDING BUT NOT LIMITED TO THE IMPLIED WARRANTIES OF MERCHANTABILITY, OR FITNESS FOR A PARTICULAR PURPOSE.
8. When using Renesas Electronics products, refer to the latest product information (data sheets, user’s manuals, application notes, “General Notes for Handling and Using Semiconductor Devices” in the reliability handbook, etc.), and ensure that usage conditions are within the ranges specified by Renesas Electronics with respect to maximum ratings, operating power supply voltage range, heat dissipation characteristics, installation, etc. Renesas Electronics disclaims any and all liability for any malfunctions, failure or accident arising out of the use of Renesas Electronics products outside of such specified ranges.
9. Although Renesas Electronics endeavors to improve the quality and reliability of Renesas Electronics products, semiconductor products have specific characteristics, such as the occurrence of failure at a certain rate and malfunctions under certain use conditions. Unless designated as a high reliability product or a product for harsh environments in a Renesas Electronics data sheet or other Renesas Electronics document, Renesas Electronics products are not subject to radiation resistance design. You are responsible for implementing safety measures to guard against the possibility of bodily injury, injury or damage caused by fire, and/or danger to the public in the event of a failure or malfunction of Renesas Electronics products, such as safety design for hardware and software, including but not limited to redundancy, fire control and malfunction prevention, appropriate treatment for aging degradation or any other appropriate measures. Because the evaluation of microcomputer software alone is very difficult and impractical, you are responsible for evaluating the safety of the final products or systems manufactured by you.
10. Please contact a Renesas Electronics sales office for details as to environmental matters such as the environmental compatibility of each Renesas Electronics product. You are responsible for carefully and sufficiently investigating applicable laws and regulations that regulate the inclusion or use of controlled substances, including without limitation, the EU RoHS Directive, and using Renesas Electronics products in compliance with all these applicable laws and regulations. Renesas Electronics disclaims any and all liability for damages or losses occurring as a result of your noncompliance with applicable laws and regulations.
11. Renesas Electronics products and technologies shall not be used for or incorporated into any products or systems whose manufacture, use, or sale is prohibited under any applicable domestic or foreign laws or regulations. You shall comply with any applicable export control laws and regulations promulgated and administered by the governments of any countries asserting jurisdiction over the parties or transactions.
12. It is the responsibility of the buyer or distributor of Renesas Electronics products, or any other party who distributes, disposes of, or otherwise sells or transfers the product to a third party, to notify such third party in advance of the contents and conditions set forth in this document.
13. This document shall not be reprinted, reproduced or duplicated in any form, in whole or in part, without prior written consent of Renesas Electronics.
14. Please contact a Renesas Electronics sales office if you have any questions regarding the information contained in this document or Renesas Electronics products.

(Note1) “Renesas Electronics” as used in this document means Renesas Electronics Corporation and also includes its directly or indirectly controlled subsidiaries.
(Note2) “Renesas Electronics product(s)” means any product developed or manufactured by or for Renesas Electronics.

(Rev.5.0-1 October 2020)

Corporate Headquarters

TOYOSU FORESIA, 3-2-24 Toyosu,
Koto-ku, Tokyo 135-0061, Japan

www.renesas.com

Trademarks

Renesas and the Renesas logo are trademarks of Renesas Electronics Corporation. All trademarks and registered trademarks are the property of their respective owners.

Contact information

For further information on a product, technology, the most up-to-date version of a document, or your nearest sales office, please visit: www.renesas.com/contact/.

© 2023 Renesas Electronics Corporation. All rights reserved.

General Precautions in the Handling of Microprocessing Unit and Microcontroller Unit Products

The following usage notes are applicable to all Microprocessing unit and Microcontroller unit products from Renesas. For detailed usage notes on the products covered by this document, refer to the relevant sections of the document as well as any technical updates that have been issued for the products.

1. Precaution against Electrostatic Discharge (ESD)

   A strong electrical field, when exposed to a CMOS device, can cause destruction of the gate oxide and ultimately degrade the device operation. Steps must be taken to stop the generation of static electricity as much as possible, and quickly dissipate it when it occurs. Environmental control must be adequate. When it is dry, a humidifier should be used. This is recommended to avoid using insulators that can easily build up static electricity. Semiconductor devices must be stored and transported in an anti-static container, static shielding bag or conductive material. All test and measurement tools including work benches and floors must be grounded. The operator must also be grounded using a wrist strap. Semiconductor devices must not be touched with bare hands. Similar precautions must be taken for printed circuit boards with mounted semiconductor devices.

2. Processing at power-on

   The state of the product is undefined at the time when power is supplied. The states of internal circuits in the LSI are indeterminate and the states of register settings and pins are undefined at the time when power is supplied. In a finished product where the reset signal is applied to the external reset pin, the states of pins are not guaranteed from the time when power is supplied until the reset process is completed. In a similar way, the states of pins in a product that is reset by an on-chip power-on reset function are not guaranteed from the time when power is supplied until the power reaches the level at which resetting is specified.

3. Input of signal during power-off state

   Do not input signals or an I/O pull-up power supply while the device is powered off. The current injection that results from input of such a signal or I/O pull-up power supply may cause malfunction and the abnormal current that passes in the device at this time may cause degradation of internal elements. Follow the guideline for input signal during power-off state as described in your product documentation.

4. Handling of unused pins

   Handle unused pins in accordance with the directions given under handling of unused pins in the manual. The input pins of CMOS products are generally in the high-impedance state. In operation with an unused pin in the open-circuit state, extra electromagnetic noise is induced in the vicinity of the LSI, an associated shoot-through current flows internally, and malfunctions occur due to the false recognition of the pin state as an input signal become possible.

5. Clock signals

   After applying a reset, only release the reset line after the operating clock signal becomes stable. When switching the clock signal during program execution, wait until the target clock signal is stabilized. When the clock signal is generated with an external resonator or from an external oscillator during a reset, ensure that the reset line is only released after full stabilization of the clock signal. Additionally, when switching to a clock signal produced with an external resonator or by an external oscillator while program execution is in progress, wait until the target clock signal is stable.

6. Voltage application waveform at input pin

   Waveform distortion due to input noise or a reflected wave may cause malfunction. If the input of the CMOS device stays in the area between V_{IL} (Max.) and V_{IH} (Min.) due to noise, for example, the device may malfunction. Take care to prevent chattering noise from entering the device when the input level is fixed, and also in the transition period when the input level passes through the area between V_{IL} (Max.) and V_{IH} (Min.).

7. Prohibition of access to reserved addresses

   Access to reserved addresses is prohibited. The reserved addresses are provided for possible future expansion of functions. Do not access these addresses as the correct operation of the LSI is not guaranteed.

8. Differences between products

   Before changing from one product to another, for example to a product with a different part number, confirm that the change will not lead to problems. The characteristics of a microprocessing unit or microcontroller unit products in the same group but having a different part number might differ in terms of internal memory capacity, layout pattern, and other factors, which can affect the ranges of electrical characteristics, such as characteristic values, operating margins, immunity to noise, and amount of radiated noise. When changing to a product with a different part number, implement a system-evaluation test for the given product.

How to Use This Manual

Readers

This manual is intended for user engineers who wish to understand the functions of the RL78/F13, F14 and design and develop application systems and programs for these devices.

Purpose

This manual is intended to give users an understanding of the functions described in the **Organization** below.

Organization

The RL78/F13, F14 manual is separated into two parts: this manual and the software edition (common to the RL78 family).

RL78/F13, F14 **User's Manual** **Hardware**	**RL78 family** **User's Manual** **Software**
• Pin functions • Internal block functions • Interrupts • Other on-chip peripheral functions • Electrical specifications	• CPU functions • Instruction set • Explanation of each instruction

How to Read This Manual

It is assumed that the readers of this manual have general knowledge of electrical engineering, logic circuits, and microcontrollers.

- To gain a general understanding of functions:
  → Read this manual in the order of the **CONTENTS**.
- How to interpret the register format:
  → For a bit number enclosed in angle brackets, the bit name is defined as a reserved word in the assembler, and is defined as an sfr variable using the #pragma sfr directive in the compiler.
- To know details of the RL78/F13, F14 Microcontroller instructions:
  → Refer to the separate document **RL78 Family User's Manual: Software (R01US0015E)**.

Conventions	Data significance:	Higher digits on the left and lower digits on the right
	Active low representations:	$\overline{\times\times\times}$ (overscore over pin and signal name)
	Note:	Footnote for item marked with **Note** in the text
	Caution:	Information requiring particular attention
	Remark:	Supplementary information
	Numerical representations:	Binary ···×××× or ××××B
		Decimal ···××××
		Hexadecimal ···××××H

Related Documents The related documents indicated in this publication may include preliminary versions. However, preliminary versions are not marked as such.

Documents Related to Devices

Document Name	Document No.
RL78/F13, F14 User's Manual: Hardware	R01UH0368E
RL78 Family User's Manual: Software	R01US0015E

Documents Related to Flash Memory Programming

Document Name	Document No.
PG-FP6 Flash Memory Programmer User's Manual	R20UT4469E
E2 Emulator User's Manual	R20UT3538E
E2 Lite Emulator User's Manual	R20UT3240E
Renesas Flash Programmer Flash Memory Programming Software User's Manual	R20UT5190E

Other Documents

Document Name	Document No.
Renesas RL78 Family Microcontrollers	R01CP0003E
Semiconductor Package Mount Manual	R50ZZ0003E
Semiconductor Reliability Handbook	R51ZZ0001E

Caution The related documents listed above are subject to change without notice. Be sure to use the latest version of each document when designing.

All trademarks and registered trademarks are the property of their respective owners.
EEPROM is a trademark of Renesas Electronics Corporation.
Windows, Windows NT and Windows XP are registered trademarks or trademarks of Microsoft Corporation in the United States and/or other countries.
PC/AT is a trademark of International Business Machines Corporation.
SuperFlash is a registered trademark of Silicon Storage Technology, Inc. in several countries including the United States and Japan.

Caution: This product uses SuperFlash® technology licensed from Silicon Storage Technology, Inc.

CONTENTS

CHAPTER 1 OVERVIEW 1

1.1 Features 1

1.1.1 Applications 2

1.2 Product Lineup 3

1.3 Function Overview 5

1.3.1 RL78/F14 Functions List 5

1.3.2 RL78/F13 (CAN and LIN incorporated) Functions List 7

1.3.3 RL78/F13 (LIN incorporated) Functions List 9

1.4 Block Diagram 11

1.4.1 RL78/F14: Block Diagram of R5F10PPn (n = E, F, G, H, J) 100-pin Products 11

1.4.2 RL78/F14: Block Diagram of R5F10PMn (n = G, H, J) 80-pin Products 12

1.4.3 RL78/F14: Block Diagram of R5F10PLn (n = G, H, J) 64-pin Products 13

1.4.4 RL78/F14: Block Diagram of R5F10PGn (n = G, H, J) 48-pin Products 14

1.4.5 RL78/F14: Block Diagram of R5F10PMn (n = E, F) 80-pin Products 15

1.4.6 RL78/F14: Block Diagram of R5F10PLn (n = E, F) 64-pin Products 16

1.4.7 RL78/F14: Block Diagram of R5F10PGn (n = D, E, F) 48-pin Products 17

1.4.8 RL78/F14: Block Diagram of R5F10PBn (n = D, E) 32-pin Products 18

1.4.9 RL78/F14: Block Diagram of R5F10PAn (n = D, E) 30-pin Products 19

1.4.10 RL78/F13: Block Diagram of R5F10BMn (n = E, F, G) (CAN and LIN incorporated) 80-pin Products20

1.4.11 RL78/F13: Block Diagram of R5F10BLn (n = C, D, E, F, G) (CAN and LIN incorporated) 64-pin Products 21

1.4.12 RL78/F13: Block Diagram of R5F10BGn (n = C, D, E, F, G) (CAN and LIN incorporated) 48-pin Products 22

1.4.13 RL78/F13: Block Diagram of R5F10BBn (n = C, D, E, F, G) (CAN and LIN incorporated) 32-pin Products 23

1.4.14 RL78/F13: Block Diagram of R5F10BAn (n = C, D, E, F, G) (CAN and LIN incorporated) 30-pin Products 24

1.4.15 RL78/F13: Block Diagram of R5F10AMn (n = E, F, G) (LIN incorporated) 80-pin Products 25

1.4.16 RL78/F13: Block Diagram of R5F10ALn (n = F, G) (LIN incorporated) 64-pin Products 26

1.4.17 RL78/F13: Block Diagram of R5F10AGn (n = F, G) (LIN incorporated) 48-pin Products 27

1.4.18 RL78/F13: Block Diagram of R5F10ALn (n = C, D, E) (LIN incorporated) 64-pin Products 28

1.4.19 RL78/F13: Block Diagram of R5F10AGn (n = A, C, D, E) (LIN incorporated) 48-pin Products 29

1.4.20 RL78/F13: Block Diagram of R5F10ABn (n = A, C, D, E) (LIN incorporated) 32-pin Products 30

1.4.21 RL78/F13: Block Diagram of R5F10AAn (n = A, C, D, E) (LIN incorporated) 30-pin Products 31

1.4.22 RL78/F13: Block Diagram of R5F10A6n (n = A, C, D, E) (LIN incorporated) 20-pin Products 32

1.5 Pin Configurations 33

1.5.1 RL78/F14 Pin Configuration for 100-pin Products 33
1.5.2 RL78/F14 Pin Configuration for 80-pin Products 34
1.5.3 RL78/F13 Pin Configuration for 80-pin Products 35
1.5.4 RL78/F14 Pin Configuration for 64-pin Products 36
1.5.5 RL78/F13 Pin Configuration for 64-pin Product 37
1.5.6 RL78/F14 Pin Configuration for 48-pin Products 38
1.5.7 RL78/F13 Pin Configuration for 48-pin Products 39
1.5.8 RL78/F14 Pin Configuration for 32-pin Products 40
1.5.9 RL78/F13 Pin Configuration for 32-pin Products 41
1.5.10 RL78/F14 Pin Configuration for 30-pin Products 42
1.5.11 RL78/F13 Pin Configuration for 30-pin Products 43
1.5.12 RL78/F13 Pin Configuration for 20-pin Products 44
1.6 Order Information 45

CHAPTER 2 PIN FUNCTIONS 49

2.1 Pin Function List 49
2.1.1 RL78/F14 100-pin products 51
2.1.2 RL78/F13 (CAN and LIN incorporated) 80-pin products 53
2.1.3 RL78/F13 (LIN incorporated) 80-pin products 55
2.1.4 Pins for each product (pins other than port pins) 57
2.2 Description of Pin Functions 70
2.2.1 P00 to P03 (Port 0) 70
2.2.2 P10 to P17 (Port 1) 70
2.2.3 P30 to P34 (Port 3) 72
2.2.4 P40 to P47 (Port 4) 73
2.2.5 P50 to P57 (Port 5) 74
2.2.6 P60 to P67 (Port 6) 75
2.2.7 P70 to P77 (Port 7) 77
2.2.8 P80 to P87 (Port 8) 78
2.2.9 P90 to P97 (Port 9) 79
2.2.10 P100 to P107 (Port 10) 79
2.2.11 P120 to P127 (Port 12) 80
2.2.12 P130, P137 (Port 13) 81
2.2.13 P140 (Port 14) 81
2.2.14 P150 to P157 (Port 15) 82
2.2.15 VDD, EVDD0, EVDD1, VSS, EVSS0, EVSS1 82
2.2.16 RESET 83
2.2.17 REGC 83
2.3 Recommended Connection of Unused Pins 84

CHAPTER 3 CPU ARCHITECTURE 90

3.1 Memory Space 90
3.1.1 Internal program memory space 116
3.1.2 Mirror area 120
3.1.3 Internal data memory space 122
3.1.4 Special function register (SFR) area 123
3.1.5 Extended special function register (2nd SFR: 2nd Special Function Register) area 123
3.1.6 Data memory addressing 124
3.2 Processor Registers 142
3.2.1 Control registers 142
3.2.2 General-purpose registers 145
3.2.3 ES and CS registers 147
3.2.4 Special function registers (SFRs) 148
3.2.5 Extended special function registers (2nd SFRs: 2nd Special Function Registers) 153
3.3 Instruction Address Addressing 187
3.3.1 Relative addressing 187
3.3.2 Immediate addressing 187
3.3.3 Table indirect addressing 188
3.3.4 Register direct addressing 189
3.4 Addressing for Processing Data Addresses 190
3.4.1 Implied addressing 190
3.4.2 Register addressing 190
3.4.3 Direct addressing 191
3.4.4 Short direct addressing 192
3.4.5 SFR addressing 193
3.4.6 Register indirect addressing 194
3.4.7 Based addressing 195
3.4.8 Based indexed addressing 199
3.4.9 Stack addressing 200

CHAPTER 4 PORT FUNCTIONS 204

4.1 Port Functions 204
4.2 Port Configuration 206
4.2.1 Port 0 207
4.2.2 Port 1 212
4.2.3 Port 3 223
4.2.4 Port 4 229
4.2.5 Port 5 239
4.2.6 Port 6 249
4.2.7 Port 7 259
4.2.8 Port 8 273
4.2.9 Port 9 283

4.2.10 Port 10 286
4.2.11 Port 12 291
4.2.12 Port 13 298
4.2.13 Port 14 301
4.2.14 Port 15 303
4.3 Registers Controlling Port Function 310
4.3.1 Port mode registers (PMxx) 322
4.3.2 Port registers (Pxx) 323
4.3.3 Pull-up resistor option registers (PUxx) 325
4.3.4 Port input mode registers (PIM1, PIM3, PIM5 to PIM7, PIM12) 326
4.3.5 Port output mode registers (POM1, POM6, POM7, POM12) 327
4.3.6 Port mode control registers 7, 9, 12 (PMC7, PMC9, PMC12) 328
4.3.7 A/D port configuration register (ADPC) 329
4.3.8 Port input threshold control registers (PITHL1, PITHL3 to PITHL7, PITHL10, PITHL12, PITHL15) 331
4.3.9 Peripheral I/O redirection register 0 (PIOR0) 333
4.3.10 Peripheral I/O redirection register 1 (PIOR1) 334
4.3.11 Peripheral I/O redirection register 2 (PIOR2) 335
4.3.12 Peripheral I/O redirection register 3 (PIOR3) 336
4.3.13 Peripheral I/O redirection register 4 (PIOR4) 337
4.3.14 Peripheral I/O redirection register 5 (PIOR5) 339
4.3.15 Peripheral I/O redirection register 6 (PIOR6) 340
4.3.16 Peripheral I/O redirection register 7 (PIOR7) 341
4.3.17 Peripheral I/O redirection register 8 (PIOR8) 342
4.3.18 Port output slew rate register (PSRSEL) 343
4.3.19 SNOOZE status output control register 0 (PSNZCNT0) 344
4.3.20 SNOOZE status output control register 1 (PSNZCNT1) 345
4.3.21 SNOOZE status output control register 2 (PSNZCNT2) 346
4.3.22 SNOOZE status output control register 3 (PSNZCNT3) 347
4.3.23 Port mode select register (PMS) 348
4.4 Port Function Operations 349
4.4.1 Writing to I/O port 349
4.4.2 Reading from I/O port 349
4.4.3 Operations on I/O port 349
4.4.4 Connecting to external device with different potential (3 V) 350
4.5 Settings of Port Mode Register and Output Latch When Using Alternate Function 352
4.6 Cautions When Using Port Function 363
4.6.1 Cautions on 1-bit manipulation instruction for port register n (Pn) 363
4.6.2 Notes on specifying the pin settings 364

CHAPTER 5 CLOCK GENERATOR 365

5.1 Functions of Clock Generator 365

5.2 Configuration of Clock Generator 368
5.3 Registers Controlling Clock Generator 372
5.3.1 Clock Operation Mode Control Register (CMC) 372
5.3.2 System Clock Control Register (CKC) 375
5.3.3 Clock Operation Status Control Register (CSC) 377
5.3.4 Oscillation Stabilization Time Counter Status Register (OSTC) 378
5.3.5 Oscillation Stabilization Time Select Register (OSTS) 380
5.3.6 Peripheral Enable Registers 0, 1, 2 (PER0, PER1, PER2) 382
5.3.7 Operation Speed Mode Control Register (OSMC) 388
5.3.8 High-Speed On-Chip Oscillator Frequency Select Register (HOCODIV) 389
5.3.9 High-Speed On-Chip Oscillator Trimming Register (HIOTRM) 390
5.3.10 CAN Clock Select Register (CANCKSEL) 391
5.3.11 LIN Clock Select Register (LINCKSEL) 392
5.3.12 Clock Select Register (CKSEL) 393
5.3.13 PLL Control Register (PLLCTL) 394
5.3.14 PLL Status Register (PLLSTS) 396
5.3.15 fMP Clock Division Register (MDIV) 397
5.4 System Clock Oscillator 398
5.4.1 X1 Oscillator 398
5.4.2 XT1 Oscillator 398
5.4.3 High-Speed On-Chip Oscillator 402
5.4.4 PLL Circuit 402
5.4.5 Low-Speed On-Chip Oscillator 402
5.4.6 WDT-Dedicated Low-Speed On-Chip Oscillator 402
5.5 Clock Generator Operation 403
5.6 Controlling Clock 405
5.6.1 Example of Setting High-Speed On-Chip Oscillator 405
5.6.2 Example of Setting X1 Oscillator 407
5.6.3 Example of Setting XT1 Oscillator 408
5.6.4 Examples of Setting PLL Circuit 409
5.6.5 Example of Setting Low-Speed On-Chip Oscillator 411
5.6.6 CPU Clock Status Transition Diagram 412
5.6.7 Conditions before Changing CPU Clock and Processing after Changing CPU Clock 416
5.6.8 Time Required for Switchover of CPU Clock, Main System/PLL Select Clock, and Main System Clock 423
5.6.9 Conditions Before Clock Oscillation Is Stopped 425
5.7 Usage Notes 426
5.7.1 CPU/Peripheral Hardware Clock 426
5.7.2 High-Speed On-Chip Oscillator 426

CHAPTER 6 TIMER ARRAY UNIT 427

6.1 Functions of Timer Array Unit 429
6.1.1 Independent channel operation function 429
6.1.2 Simultaneous channel operation function 430
6.1.3 8-bit timer operation function (channels 1 and 3 only) 431
6.1.4 LIN-bus supporting function (channel 7 of unit 0 only) 432
6.2 Configuration of Timer Array Unit 433
6.2.1 Timer count register mn (TCRmn) 439
6.2.2 Timer data register mn (TDRmn) 441
6.3 Registers Controlling Timer Array Unit 442
6.3.1 Peripheral enable register 0 (PER0) 443
6.3.2 Timer clock select register m (TPSm) 444
6.3.3 Timer mode register mn (TMRmn) 447
6.3.4 Timer status register mn (TSRmn) 453
6.3.5 Timer channel enable status register m (TEm) 454
6.3.6 Timer channel start register m (TSm) 455
6.3.7 Timer channel stop register m (TTm) 456
6.3.8 Timer input select register 0 (TIS0) 457
6.3.9 Timer input select register 1 (TIS1) 458
6.3.10 Timer input select register 2 (TIS2) 459
6.3.11 Timer output enable register m (TOEm) 460
6.3.12 Timer output register m (TOm) 461
6.3.13 Timer output level register m (TOLm) 462
6.3.14 Timer output mode register m (TOMm) 463
6.3.15 Noise filter enable registers 1, 2 (NFEN1, NFEN2) 464
6.3.16 Port mode registers 1, 3, 4, 7, 12 (PM1, PM3, PM4, PM7, PM12) 467
6.3.17 PWM output delay control register 1 (PWMDLY1) 469
6.3.18 PWM output delay control register 2 (PWMDLY2) 470
6.4 Basic Rules of Timer Array Unit 471
6.4.1 Basic rules of simultaneous channel operation function 471
6.4.2 Basic rules of 8-bit timer operation function (channels 1 and 3 only) 473
6.5 Operation Timing of Counter 474
6.5.1 Count clock (fTCLK) 474
6.5.2 Start timing of counter 476
6.5.3 Operation of counter 477
6.6 Channel Output (TOmn pin) Control 482
6.6.1 TOmn pin output circuit configuration 482
6.6.2 TOmn Pin Output Setting 483
6.6.3 Cautions on Channel Output Operation 484
6.6.4 Collective manipulation of TOmn bit 489
6.6.5 Timer Interrupt and TOmn Pin Output at Operation Start 490
6.7 Independent Channel Operation Function of Timer Array Unit 491

6.7.1 Operation as interval timer/square wave output 491
6.7.2 Operation as external event counter 497
6.7.3 Operation as frequency divider 502
6.7.4 Operation as input pulse interval measurement 506
6.7.5 Operation as input signal high-/low-level width measurement 511
6.7.6 Operation as delay counter 516
6.8 Simultaneous Channel Operation Function of Timer Array Unit 521
6.8.1 Operation as one-shot pulse output function 521
6.8.2 Operation as PWM function 529
6.8.3 Operation as multiple PWM output function 536
6.9 Cautions When Using Timer Array Unit 545
6.9.1 Cautions When Using Timer output 545

CHAPTER 7 TIMER RJ 546

7.1 Overview 546
7.2 I/O Pins 547
7.3 Registers 548
7.3.1 Peripheral enable register 1 (PER1) 549
7.3.2 Operation speed mode control register (OSMC) 550
7.3.3 Clock Select Register (CKSEL) 550
7.3.4 Timer RJ Counter Register 0 (TRJ0), Timer RJ Reload Register 551
7.3.5 Timer RJ Control Register 0 (TRJCR0) 552
7.3.6 Timer RJ I/O Control Register 0 (TRJIOC0) 554
7.3.7 Timer RJ Mode Register 0 (TRJMR0) 556
7.3.8 Timer RJ Event Pin Select Register 0 (TRJISR0) 558
7.3.9 Port mode registers 1, 4 (PM1, PM4) 559
7.4 Operation 560
7.4.1 Reload Register and Counter Rewrite Operation 560
7.4.2 Timer Mode 561
7.4.3 Pulse Output Mode 562
7.4.4 Event Counter Mode 563
7.4.5 Pulse Width Measurement Mode 565
7.4.6 Pulse Period Measurement Mode 566
7.4.7 Coordination with Event Link Controller (ELC) 567
7.4.8 Output Settings for Each Mode 567
7.5 Notes on Timer RJ 568
7.5.1 Count Operation Start and Stop Control 568
7.5.2 Access to Flags (Bits TEDGF and TUNDF in TRJCR0 Register) 568
7.5.3 Access to Counter Register 568
7.5.4 When Changing Mode 568
7.5.5 Procedure for Setting Pins TRJO0 and TRJIO0 569

7.5.6 When Timer RJ is not Used 569
7.5.7 When Timer RJ Operating Clock is Stopped 569
7.5.8 Procedure for Setting STOP Mode (Event Counter Mode) 569
7.5.9 Functional Restriction in STOP Mode (Event Counter Mode Only) 570
7.5.10 When Count is Forcibly Stopped by TSTOP Bit 570
7.5.11 Digital Filter 570
7.5.12 When Selecting fIL as Count Source 570

CHAPTER 8 TIMER RD 571

8.1 Overview 571
8.2 Registers 573
8.2.1 Peripheral enable register 1 (PER1) 574
8.2.2 Clock Select Register (CKSEL) 575
8.2.3 Timer RD ELC Register (TRDELC) 576
8.2.4 Timer RD Start Register (TRDSTR) 577
8.2.5 Timer RD Mode Register (TRDMR) 578
8.2.6 Timer RD PWM Function Select Register (TRDPMR) 579
8.2.7 Timer RD Function Control Register (TRDFCR) 580
8.2.8 Timer RD Output Master Enable Register 1 (TRDOER1) 582
8.2.9 Timer RD Output Master Enable Register 2 (TRDOER2) 583
8.2.10 Timer RD Output Control Register (TRDOCR) 584
8.2.11 Timer RD Digital Filter Function Select Register i (TRDDFi) (i = 0 or 1) 587
8.2.12 Timer RD Control Register i (TRDCRi) (i = 0 or 1) 589
8.2.13 Timer RD I/O Control Register Ai (TRDIORAi) (i = 0 or 1) 594
8.2.14 Timer RD I/O Control Register Ci (TRDIORCi) (i = 0 or 1) 596
8.2.15 Timer RD Status Register i (TRDSRi) (i = 0 or 1) 598
8.2.16 Timer RD Interrupt Enable Register i (TRDIERi) (i = 0 or 1) 602
8.2.17 Timer RD PWM Function Output Level Control Register i (TRDPOCRi) (i = 0 or 1) 603
8.2.18 Timer RD Counter i (TRDi) (i = 0 or 1) 604
8.2.19 Timer RD General Registers Ai, Bi, Ci, and Di (TRDGRAi, TRDGRBi,TRDGRCi, TRDGRDi) (i = 0 or 1) 606
8.2.20 PWM Output Delay Control Register 0 (PWMDLY0) 615
8.2.21 Port mode registers (PM1, PM3, PM12) 616
8.3 Operation 617
8.3.1 Items Common to Multiple Modes 617
8.3.2 Input Capture Function 628
8.3.3 Output Compare Function 632
8.3.4 PWM Function 637
8.3.5 Reset Synchronous PWM Mode 641
8.3.6 Complementary PWM Mode 644
8.3.7 PWM3 Mode 648

8.4 Timer RD Interrupt **651**
8.5 Notes on Timer RD **653**
8.5.1 SFR Read/Write Access 653
8.5.2 Mode Switching 653
8.5.3 Count Source 654
8.5.4 Input Capture Function 654
8.5.5 Procedure for Setting Pins TRDIOAi, TRDIOBi, TRDIOCi, and TRDIODi (i = 0 or 1) 654
8.5.6 External clock TRDCLK0 654
8.5.7 Reset Synchronous PWM Mode 655
8.5.8 Complementary PWM Mode 655

CHAPTER 9 REAL-TIME CLOCK **660**

9.1 Functions of Real-time Clock **660**
9.2 Configuration of Real-time Clock **660**
9.3 Registers Controlling Real-time Clock **662**
9.3.1 Peripheral enable register 0 (PER0) 663
9.3.2 Operation speed mode control register (OSMC) 664
9.3.3 Timer input select register 1 (TIS1) 665
9.3.4 Timer input select register 2 (TIS2) 666
9.3.5 RTC clock select register (RTCCL) 667
9.3.6 Real-time clock control register 0 (RTCC0) 668
9.3.7 Real-time clock control register 1 (RTCC1) 669
9.3.8 Second count register (SEC) 672
9.3.9 Minute count register (MIN) 672
9.3.10 Hour count register (HOUR) 673
9.3.11 Day count register (DAY) 675
9.3.12 Week count register (WEEK) 676
9.3.13 Month count register (MONTH) 677
9.3.14 Year count register (YEAR) 677
9.3.15 Watch error correction register (SUBCUD) 678
9.3.16 16-bit watch error correction register (SUBCUDW) 679
9.3.17 Alarm minute register (ALARMWM) 680
9.3.18 Alarm hour register (ALARMWH) 680
9.3.19 Alarm week register (ALARMWW) 680
9.4 Real-time Clock Operation **682**
9.4.1 Starting operation of real-time clock 682
9.4.2 Shifting to HALT/STOP mode after starting operation 683
9.4.3 Reading/writing real-time clock 684
9.4.4 Setting alarm of real-time clock 688
9.4.5 1 Hz output of real-time clock 689
9.4.6 Example of watch error correction of real-time clock 690

CHAPTER 10 CLOCK OUTPUT/BUZZER OUTPUT CONTROLLER 693

10.1 Functions of Clock Output/Buzzer Output Controller 693

10.2 Configuration of Clock Output/Buzzer Output Controller 695

10.3 Registers Controlling Clock Output/Buzzer Output Controller 695

10.3.1 Clock output select register 0 (CKS0) 695

10.3.2 Clock Select Register (CKSEL) 697

10.3.3 Port mode register 14 (PM14) 698

10.4 Operations of Clock Output/Buzzer Output Controller 699

10.4.1 Operation as output pin 699

10.5 Notes on Clock Output/Buzzer Output Controller 699

CHAPTER 11 WATCHDOG TIMER 700

11.1 Functions of Watchdog Timer 700

11.2 Configuration of Watchdog Timer 701

11.3 Register Controlling Watchdog Timer 702

11.3.1 Watchdog timer enable register (WDTE) 702

11.4 Operation of Watchdog Timer 703

11.4.1 Controlling operation of watchdog timer 703

11.4.2 Setting overflow time of watchdog timer 704

11.4.3 Setting window open period of watchdog timer 705

11.4.4 Setting watchdog timer interval interrupt 706

CHAPTER 12 A/D CONVERTER 707

12.1 Function of A/D Converter 708

12.2 Configuration of A/D Converter 710

12.3 Registers Used in A/D Converter 712

12.3.1 Peripheral enable register 0 (PER0) 713

12.3.2 A/D converter mode register 0 (ADM0) 714

12.3.3 A/D converter mode register 1 (ADM1) 723

12.3.4 A/D converter mode register 2 (ADM2) 724

12.3.5 10-bit A/D conversion result register (ADCR) 727

12.3.6 8-bit A/D conversion result register (ADCRH) 728

12.3.7 Analog input channel specification register (ADS) 729

12.3.8 Conversion result comparison upper limit setting register (ADUL) 732

12.3.9 Conversion result comparison lower limit setting register (ADLL) 732

12.3.10 A/D test register (ADTES) 733

12.3.11 A/D port configuration register (ADPC) 734

12.3.12 A/D converter trigger select register 0 (ADTRGS0) (RL78/F13 only) 735

12.3.13 A/D converter trigger select register 1 (ADTRGS1) (RL78/F13 only) 736

12.3.14 Port mode control registers 7, 9, and 12 (PMC7, PMC9, PMC12) 737

12.3.15 Port mode registers 3, 7 to 10, and 12 (PM3, PM7 to PM10, PM12) 738
12.4 A/D Converter Conversion Operations 740
12.5 Input Voltage and Conversion Results 742
12.6 A/D Converter Operation Modes 743
12.6.1 Software trigger mode (select mode, sequential conversion mode) 743
12.6.2 Software trigger mode (select mode, one-shot conversion mode) 744
12.6.3 Software trigger mode (scan mode, sequential conversion mode) 745
12.6.4 Software trigger mode (scan mode, one-shot conversion mode) 746
12.6.5 Hardware trigger no-wait mode (select mode, sequential conversion mode) 747
12.6.6 Hardware trigger no-wait mode (select mode, one-shot conversion mode) 748
12.6.7 Hardware trigger no-wait mode (scan mode, sequential conversion mode) 749
12.6.8 Hardware trigger no-wait mode (scan mode, one-shot conversion mode) 750
12.6.9 Hardware trigger wait mode (select mode, sequential conversion mode) 751
12.6.10 Hardware trigger wait mode (select mode, one-shot conversion mode) 752
12.6.11 Hardware trigger wait mode (scan mode, sequential conversion mode) 753
12.6.12 Hardware trigger wait mode (scan mode, one-shot conversion mode) 754
12.7 A/D Converter Setup Flowchart 755
12.7.1 Setting up software trigger mode 756
12.7.2 Setting up hardware trigger no-wait mode 757
12.7.3 Setting up hardware trigger wait mode 758
12.7.4 Setup when using temperature sensor (example for software trigger mode and one-shot conversion mode) 759
12.7.5 Setting up test mode 760
12.8 SNOOZE Mode Function 761
12.8.1 If an interrupt is generated after A/D conversion ends 762
12.8.2 If no interrupt is generated after A/D conversion ends 763
12.9 How to Read A/D Converter Characteristics Table 764
12.10 Cautions for A/D Converter 766

CHAPTER 13 D/A CONVERTER (RL78/F14 Only) 770

13.1 Function of D/A Converter 770
13.2 Configuration of D/A Converter 771
13.3 Registers of D/A Converter 772
13.3.1 A/D Port Configuration Register (ADPC) 773
13.3.2 Peripheral Enable Register 1 (PER1) 774
13.3.3 D/A Converter Mode Register (DAM) 775
13.3.4 D/A Converter Mode Register 2 (DAM2) 776
13.3.5 D/A Conversion Value Setting Register 0 (DACS0) 777
13.3.6 Port Mode Register 8 (PM8) 778
13.4 Operations of D/A Converter 780
13.4.1 Operation in Normal Mode 780

13.4.2 Operation in Real-Time Output Mode 781
13.5 Cautions for D/A Converter 782

CHAPTER 14 COMPARATOR (RL78/F14 Only) 783

14.1 Overview 783
14.2 Registers to Control the Comparator 785
14.2.1 Peripheral Enable Register 1 (PER1) 785
14.2.2 Comparator Control Register (CMPCTL) 786
14.2.3 Comparator I/O Select Register (CMPSEL) 788
14.2.4 Comparator Output Monitor Register (CMPMON) 789
14.2.5 A/D port configuration register (ADPC) 790
14.2.6 D/A converter mode register 2 (DAM2) 791
14.2.7 Port mode register 4 (PM4) 792
14.2.8 Port mode register (PM8) 793
14.3 Operation 794
14.3.1 Noise Filter 795
14.3.2 Comparator Interrupts 796
14.3.3 Comparator ELC Event Output 796
14.3.4 Comparator Pin Output 796
14.3.5 Stopping or Supplying Comparator Clock 796
14.3.6 Comparator Setting Flowchart 797

CHAPTER 15 SERIAL ARRAY UNIT 799

15.1 Functions of Serial Array Unit 800
15.1.1 3-wire serial I/O (CSI00, CSI01, CSI10, CSI11) 800
15.1.2 UART (UART0, UART1) 801
15.1.3 Simplified I^2C (IIC00, IIC01, IIC10, IIC11) 802
15.2 Configuration of Serial Array Unit 803
15.3 Registers Controlling Serial Array Unit 809
15.3.1 Peripheral enable register 0 (PER0) 810
15.3.2 Serial clock select register m (SPSm) 811
15.3.3 Serial mode register mn (SMRmn) 812
15.3.4 Serial communication operation setting register mn (SCRmn) 814
15.3.5 Higher 7 bits of the serial data register mn (SDRmn) 817
15.3.6 Serial flag clear trigger register mn (SIRmn) 819
15.3.7 Serial status register mn (SSRmn) 820
15.3.8 Serial channel start register m (SSm) 822
15.3.9 Serial channel stop register m (STm) 823
15.3.10 Serial channel enable status register m (SEm) 824
15.3.11 Serial output enable register m (SOEm) 825
15.3.12 Serial output register m (SOm) 826

15.3.13 Serial output level register m (SOLm) ... 827
15.3.14 Serial slave select enable register m (SSEm) ... 828
15.3.15 Input switch control register (ISC) ... 829
15.3.16 Noise filter enable register 0 (NFEN0) ... 830
15.3.17 Port input mode registers 1, 3, 5 to 7, 12 (PIM1, PIM3, PIM5 to PIM7, PIM12) ... 831
15.3.18 Port output mode registers 1, 6, 7, 12 (POM1, POM6, POM7, POM12) ... 832
15.3.19 Port mode registers 1, 3 to 7, 12 (PM1, PM3 to PM7, PM12) ... 833
15.4 Operation stop mode ... 835
15.4.1 Stopping the operation by units ... 836
15.4.2 Stopping the operation by channels ... 837
15.5 Operation of 3-Wire Serial I/O (CSI00, CSI01, CSI10, CSI11) Communication ... 839
15.5.1 Master transmission ... 841
15.5.2 Master reception ... 851
15.5.3 Master transmission/reception ... 861
15.5.4 Slave transmission ... 871
15.5.5 Slave reception ... 881
15.5.6 Slave transmission/reception ... 888
15.5.7 Calculating transfer clock frequency ... 898
15.5.8 Procedure for processing errors that occurred during 3-wire serial I/O (CSI00, CSI01, CSI10, CSI11) communication ... 900
15.6 Clock Synchronous Serial Communication with SPI Function ... 901
15.6.1 Master transmission ... 905
15.6.2 Master reception ... 915
15.6.3 Master transmission/reception ... 925
15.6.4 Slave transmission ... 935
15.6.5 Slave reception ... 945
15.6.6 Slave transmission/reception ... 952
15.6.7 Calculating transfer clock frequency ... 962
15.6.8 Procedure for processing errors that occurred during clock synchronous serial communication with SPI function ... 964
15.7 Operation of UART (UART0, UART1) Communication ... 965
15.7.1 UART transmission ... 967
15.7.2 UART reception ... 977
15.7.3 Calculating baud rate ... 984
15.7.4 Procedure for processing errors that occurred during UART (UART0, UART1) communication ... 988
15.8 LIN Communication Operation ... 989
15.8.1 LIN transmission ... 989
15.8.2 LIN reception ... 992
15.9 Operation of Simplified I²C (IIC00, IIC01, IIC10, IIC11) Communication ... 998
15.9.1 Address field transmission ... 1001
15.9.2 Data transmission ... 1007

15.9.3 Data reception 1012
15.9.4 Stop condition generation 1017
15.9.5 Calculating transfer rate 1019
15.9.6 Procedure for processing errors that occurred during simplified I²C (IIC00, IIC01, IIC10, IIC11) communication 1022

CHAPTER 16 SERIAL INTERFACE IICA 1023

16.1 Functions of Serial Interface IICA 1023
16.2 Configuration of Serial Interface IICA 1026
16.3 Registers Controlling Serial Interface IICA 1029
16.3.1 Peripheral enable register 0 (PER0) 1029
16.3.2 IICA control register 00 (IICCTL00) 1030
16.3.3 IICA status register 0 (IICS0) 1035
16.3.4 IICA flag register 0 (IICF0) 1037
16.3.5 IICA control register 01 (IICCTL01) 1039
16.3.6 IICA low-level width setting register 0 (IICWL0) 1041
16.3.7 IICA high-level width setting register 0 (IICWH0) 1041
16.3.8 Port mode register 6 (PM6) 1042
16.3.9 Port output mode register (POM6) 1043
16.4 I²C Bus Mode Functions 1044
16.4.1 Pin configuration 1044
16.4.2 Setting transfer clock by using IICWL0 and IICWH0 registers 1045
16.5 I²C Bus Definitions and Control Methods 1047
16.5.1 Start conditions 1047
16.5.2 Addresses 1048
16.5.3 Transfer direction specification 1048
16.5.4 Acknowledge (ACK) 1049
16.5.5 Stop condition 1050
16.5.6 Wait 1051
16.5.7 Canceling wait 1053
16.5.8 Interrupt request (INTIICA0) generation timing and wait control 1054
16.5.9 Address match detection method 1055
16.5.10 Error detection 1055
16.5.11 Extension code 1055
16.5.12 Arbitration 1056
16.5.13 Wakeup function 1058
16.5.14 Communication reservation 1061
16.5.15 Cautions 1065
16.5.16 Communication operations 1066
16.5.17 Timing of I²C interrupt request (INTIICA0) occurrence 1073
16.6 Timing Charts 1094

CHAPTER 17 LIN/UART MODULE (RLIN3) 1109

17.1 Overview 1109

17.2 Register Descriptions 1114

17.2.1 LIN Registers for Master Mode 1116

17.2.2 LIN Registers for Slave Mode 1144

17.2.3 Registers for UART 1172

17.3 Modes 1202

17.3.1 LIN Reset Mode 1204

17.3.2 LIN Mode 1205

17.3.3 UART Mode 1207

17.3.4 LIN Self-Test Mode 1207

17.4 LIN Mode 1208

17.4.1 Operation Overview 1208

17.4.2 Data Transmission/Reception 1216

17.4.3 Transmission/Reception Data Buffering 1218

17.4.4 Wake-up Transmission/Reception 1221

17.4.5 Status 1223

17.4.6 Error Status 1225

17.5 UART Mode 1231

17.5.1 Operation Overview 1231

17.5.2 Data Transmission/Reception 1246

17.5.3 Buffer Processing of Transmission Data 1248

17.5.4 Status 1249

17.5.5 Error Status 1250

17.6 LIN Self-Test Mode 1251

17.6.1 Change to LIN Self-Test Mode 1252

17.6.2 Transmission in LIN Master Self-Test Mode 1253

17.6.3 Reception in LIN Master Self-Test Mode 1254

17.6.4 Transmission in LIN Slave Self-Test Mode 1255

17.6.5 Reception in LIN Slave Self-Test Mode 1256

17.6.6 Terminating LIN Self-Test Mode 1257

17.7 Baud Rate Generator 1258

17.7.1 LIN Master Mode 1258

17.7.2 LIN Slave Mode 1260

17.7.3 UART Mode 1262

17.8 Noise Filter 1263

17.9 Interrupts 1265

CHAPTER 18 CAN INTERFACE (RS-CAN LITE) 1266

18.1 Overview 1266

18.2 Input/Output Pins 1269
18.3 Register Descriptions 1270
18.3.1 CANi Bit Configuration Register L (CiCFGL) (i = 0) 1292
18.3.2 CANi Bit Configuration Register H (CiCFGH) (i = 0) 1293
18.3.3 CANi Control Register L (CiCTRL) (i = 0) 1295
18.3.4 CANi Control Register H (CiCTRH) (i = 0) 1297
18.3.5 CANi Status Register L (CiSTSL) (i = 0) 1299
18.3.6 CANi Status Register H (CiSTSH) (i = 0) 1301
18.3.7 CANi Error Flag Register L (CiERFLL) (i = 0) 1302
18.3.8 CANi Error Flag Register H (CiERFLH) (i = 0) 1305
18.3.9 CAN Global Configuration Register L (GCFGL) 1306
18.3.10 CAN Global Configuration Register H (GCFGH) 1308
18.3.11 CAN Global Control Register L (GCTRL) 1309
18.3.12 CAN Global Control Register H (GCTRH) 1310
18.3.13 CAN Global Status Register (GSTS) 1311
18.3.14 CAN Global Error Flag Register (GERFLL) 1312
18.3.15 CAN Global Transmit Interrupt Status Register (GTINTSTS) 1313
18.3.16 CAN Timestamp Register (GTSC) 1314
18.3.17 CAN Receive Rule Number Configuration Register (GAFLCFG) 1315
18.3.18 CAN Receive Rule Entry Register jAL (GAFLIDLj) (j = 0 to 15) 1316
18.3.19 CAN Receive Rule Entry Register jAH (GAFLIDHj) (j = 0 to 15) 1317
18.3.20 CAN Receive Rule Entry Register jBL (GAFLMLj) (j = 0 to 15) 1318
18.3.21 CAN Receive Rule Entry Register jBH (GAFLMHj) (j = 0 to 15) 1319
18.3.22 CAN Receive Rule Entry Register jCL (GAFLPLj) (j = 0 to 15) 1320
18.3.23 CAN Receive Rule Entry Register jCH (GAFLPHj) (j = 0 to 15) 1321
18.3.24 CAN Receive Buffer Number Configuration Register (RMNB) 1322
18.3.25 CAN Receive Buffer Receive Complete Flag Register (RMND0) 1323
18.3.26 CAN Receive Buffer Register nAL (RMIDLn) (n = 0 to 15) 1324
18.3.27 CAN Receive Buffer Register nAH (RMIDHn) (n = 0 to 15) 1325
18.3.28 CAN Receive Buffer Register nBL (RMTSn) (n = 0 to 15) 1326
18.3.29 CAN Receive Buffer Register nBH (RMPTRn) (n = 0 to 15) 1327
18.3.30 CAN Receive Buffer Register nCL (RMDF0n) (n = 0 to 15) 1328
18.3.31 CAN Receive Buffer Register nCH (RMDF1n) (n = 0 to 15) 1329
18.3.32 CAN Receive Buffer Register nDL (RMDF2n) (n = 0 to 15) 1330
18.3.33 CAN Receive Buffer Register nDH (RMDF3n) (n = 0 to 15) 1331
18.3.34 CAN Receive FIFO Control Register m (RFCCm) (m = 0, 1) 1332
18.3.35 CAN Receive FIFO Status Register m (RFSTSm) (m = 0, 1) 1334
18.3.36 CAN Receive FIFO Pointer Control Register m (RFPCTRm) (m = 0, 1) 1336
18.3.37 CAN Receive FIFO Access Register mAL (RFIDLm) (m = 0, 1) 1337
18.3.38 CAN Receive FIFO Access Register mAH (RFIDHm) (m = 0, 1) 1338
18.3.39 CAN Receive FIFO Access Register mBL (RFTSm) (m = 0, 1) 1339

18.3.40 CAN Receive FIFO Access Register mBH (RFPTRm) (m = 0, 1) 1340
18.3.41 CAN Receive FIFO Access Register mCL (RFDF0m) (m = 0, 1) 1341
18.3.42 CAN Receive FIFO Access Register mCH (RFDF1m) (m = 0, 1)..... 1342
18.3.43 CAN Receive FIFO Access Register mDL (RFDF2m) (m = 0, 1) 1343
18.3.44 CAN Receive FIFO Access Register mDH (RFDF3m) (m = 0, 1)..... 1344
18.3.45 CANi Transmit/Receive FIFO Control Register kL (CFCCLk) (i = 0) (k = 0)..... 1345
18.3.46 CANi Transmit/Receive FIFO Control Register kH (CFCCHk) (i = 0) (k = 0)..... 1347
18.3.47 CANi Transmit/Receive FIFO Status Register k (CFSTSk) (i = 0) (k = 0) 1349
18.3.48 CANi Transmit/Receive FIFO Pointer Control Register k (CFPCTRk) (i = 0) (k = 0)..... 1352
18.3.49 CANi Transmit/Receive FIFO Access Register kAL (CFIDLk) (i = 0) (k = 0) 1353
18.3.50 CANi Transmit/Receive FIFO Access Register kAH (CFIDHk) (i = 0) (k = 0)..... 1354
18.3.51 CANi Transmit/Receive FIFO Access Register kBL (CFTSk) (i = 0) (k = 0) 1355
18.3.52 CANi Transmit/Receive FIFO Access Register kBH (CFPTRk) (i = 0) (k = 0)..... 1356
18.3.53 CANi Transmit/Receive FIFO Access Register kCL (CFDF0k) (i = 0) (k = 0)..... 1357
18.3.54 CANi Transmit/Receive FIFO Access Register kCH (CFDF1k) (i = 0) (k = 0) 1358
18.3.55 CANi Transmit/Receive FIFO Access Register kDL (CFDF2k) (i = 0) (k = 0)..... 1359
18.3.56 CANi Transmit/Receive FIFO Access Register kDH (CFDF3k) (i = 0) (k = 0) 1360
18.3.57 Receive FIFO Message Lost Status Register (RFMSTS)..... 1361
18.3.58 CANi Transmit/Receive FIFO Message Lost Status Register (CFMSTS) (i = 0) 1362
18.3.59 CAN Receive FIFO Interrupt Status Register (RFISTS) 1363
18.3.60 CAN Transmit/Receive FIFO Receive Interrupt Status Register (CFISTS) 1364
18.3.61 CANi Transmit Buffer Control Register p (TMCp) (i = 0) (p = 0 to 3) 1365
18.3.62 CANi Transmit Buffer Status Register p (TMSTSp) (i = 0) (p = 0 to 3) 1367
18.3.63 CANi Transmit Buffer Transmit Request Status Register (TMTRSTS) (i = 0) 1368
18.3.64 CANi Transmit Buffer Transmit Complete Status Register (TMTCSTS) (i = 0) 1369
18.3.65 CANi Transmit Buffer Transmit Abort Status Register (TMTASTS) (i = 0) 1370
18.3.66 CANi Transmit Buffer Interrupt Enable Register (TMIEC) (i = 0) 1371
18.3.67 CANi Transmit Buffer Register pAL (TMIDLp) (i = 0) (p = 0 to 3) 1372
18.3.68 CANi Transmit Buffer Register pAH (TMIDHp) (i = 0) (p = 0 to 3)..... 1373
18.3.69 CANi Transmit Buffer Register pBH (TMPTRp) (i = 0) (p = 0 to 3)..... 1374
18.3.70 CANi Transmit Buffer Register pCL (TMDF0p) (i = 0) (p = 0 to 3)..... 1375
18.3.71 CANi Transmit Buffer Register pCH (TMDF1p) (i = 0) (p = 0 to 3) 1376
18.3.72 CANi Transmit Buffer Register pDL (TMDF2p) (i = 0) (p = 0 to 3)..... 1377
18.3.73 CANi Transmit Buffer Register pDH (TMDF3p) (i = 0) (p = 0 to 3) 1378
18.3.74 CANi Transmit History Buffer Control Register (THLCCi) (i = 0) 1379
18.3.75 CANi Transmit History Buffer Status Register (THLSTSi) (i = 0)..... 1380
18.3.76 CANi Transmit History Buffer Access Register (THLACCi) (i = 0)..... 1382
18.3.77 CANi Transmit History Buffer Pointer Control Register (THLPCTRi) (i = 0) 1383
18.3.78 CAN Global RAM Window Control Register (GRWCR)..... 1384
18.3.79 CAN Global Test Configuration Register (GTSTCFG) 1385
18.3.80 CAN Global Test Control Register (GTSTCTRL) 1386

18.3.81 CAN Global Test Protection Unlock Register (GLOCKK) 1387
18.3.82 CAN RAM Test Register r (RPGACCr) (r = 0 to 127) 1388
18.4 CAN Modes 1389
18.4.1 Global Modes 1389
18.4.2 Channel Modes 1391
18.5 Reception Function 1396
18.5.1 Data Processing Using the Receive Rule Table 1396
18.5.2 Timestamp 1398
18.6 Transmission Functions 1399
18.6.1 Transmit Priority Determination 1399
18.6.2 Transmission Using Transmit Buffers 1400
18.6.3 Transmission Using FIFO Buffers 1401
18.6.4 Transmit History Function 1403
18.7 Test Function 1404
18.7.1 Standard Test Mode 1404
18.7.2 Listen-Only Mode 1404
18.7.3 Self-Test Mode (Loopback Mode) 1405
18.7.4 RAM Test 1405
18.8 Interrupt 1406
18.9 RAM Window 1410
18.10 Initial Settings 1411
18.10.1 Clock Setting 1413
18.10.2 Bit Timing Setting 1413
18.10.3 Communication Speed Setting 1414
18.10.4 Receive Rule Setting 1416
18.10.5 Buffer Setting 1417
18.11 Reception Procedure 1419
18.11.1 Receive Buffer Reading Procedure 1419
18.11.2 FIFO Buffer Reading Procedure 1421
18.12 Transmission Procedure 1424
18.12.1 Procedure for Transmission from Transmit Buffers 1424
18.12.2 Procedure for Transmission from Transmit/Receive FIFO Buffers 1427
18.12.3 Transmit History Buffer Reading Procedure 1430
18.13 Test Settings 1431
18.13.1 Self-Test Mode Setting Procedure 1431
18.13.2 Protection Unlock Procedure 1432
18.13.3 RAM Test Setting Procedure 1433
18.14 Notes on the CAN Module 1434

CHAPTER 19 DTC 1436

19.1 Overview 1436

19.2 Registers 1438
19.2.1 Allocation of DTC Control Data Area and DTC Vector Table Area 1440
19.2.2 DTC Control Data Allocation 1441
19.2.3 DTC Vector Table 1442
19.2.4 Peripheral enable register 1 (PER1) 1446
19.2.5 DTC Activation Enable Register i (DTCENi) (i = 0 to 5) 1447
19.2.6 DTC Base Address Register (DTCBAR) 1450
19.2.7 DTC Control Register j (DTCCRj) (j = 0 to 23) 1451
19.2.8 DTC Block Size Register j (DTBLSj) (j = 0 to 23) 1452
19.2.9 DTC Transfer Count Register j (DTCCTj) (j = 0 to 23) 1452
19.2.10 DTC Transfer Count Reload Register j (DTRLDj) (j = 0 to 23) 1453
19.2.11 DTC Source Address Register j (DTSARj) (j = 0 to 23) 1453
19.2.12 DTC Destination Address Register j (DTDARj) (j = 0 to 23) 1453
19.2.13 High-speed DTC Channel Select Register 0 (SELHS0) 1454
19.2.14 High-speed DTC Channel Select Register 1 (SELHS1) 1455
19.2.15 High-speed DTC Control Register m (HDTCCR0/1) (m = 0, 1) 1456
19.2.16 High-speed DTC Transfer Count Register m (HDTCCT0/1) (m = 0, 1) 1457
19.2.17 DTC Transfer Count Reload Register m (HDTRLD0/1) (m = 0, 1) 1458
19.2.18 High-speed DTC Source Address Register m (HDTSAR0/1) (m = 0, 1) 1458
19.2.19 High-speed DTC Destination Address Register m (HDTDAR0/1) (m = 0, 1) 1458
19.3 Operation 1459
19.3.1 Activation Sources 1459
19.3.2 Normal Mode 1461
19.3.3 Repeat Mode 1463
19.3.4 Chain Transfers 1467
19.3.5 High-Speed Transfer Operation 1469
19.4 Notes on DTC 1470
19.4.1 Setting DTC Registers and Vector Table 1470
19.4.2 Allocation of DTC Control Data Area and DTC Vector Table Area 1470
19.4.3 DTC Pending Instruction 1471
19.4.4 Operations when an Instruction which Accesses an SFR Register that Requires a Wait is Executed 1471
19.4.5 Operation when Accessing Data Flash Memory Space 1471
19.4.6 Number of DTC Execution Clock Cycles 1472
19.4.7 Number of High-speed DTC Execution Clock Cycles 1473
19.4.8 DTC Response Time 1474
19.4.9 DTC Activation Sources 1474
19.4.10 Operation in Standby Mode Status 1475
19.4.11 Notes When the RAM Area Is the Source of the Data for Transfer 1475
19.4.12 Vector Address for High-Speed Transfer 1475

CHAPTER 20 EVENT LINK CONTROLLER (ELC) (RL78/F14 Only) 1476

20.1 Overview 1476

20.2 Registers 1477

20.2.1 Event Output Destination Select Register n (ELSELRn) (n = 00 to 25) 1478

20.2.2 Timer input select register 0 1481

20.2.3 A/D converter mode register 1 (ADM1) 1481

20.2.4 D/A converter mode register (DAM) 1481

20.3 Operation 1482

CHAPTER 21 INTERRUPT FUNCTIONS 1483

21.1 Interrupt Function Types 1483

21.2 Interrupt Sources and Configuration 1484

21.3 Registers Controlling Interrupt Functions 1494

21.3.1 Interrupt request flag registers (IF0L, IF0H, IF1L, IF1H, IF2L, IF2H, IF3L) 1500

21.3.2 Interrupt mask flag registers (MK0L, MK0H, MK1L, MK1H, MK2L, MK2H, MK3L) 1502

21.3.3 Priority specification flag registers (PR00L, PR00H, PR01L, PR01H, PR02L, PR02H, PR03L, PR10L, PR10H, PR11L, PR11H, PR12L, PR12H, PR13L) 1504

21.3.4 External interrupt rising edge enable registers (EGP0, EGP1), external interrupt falling edge enable registers (EGN0, EGN1) 1507

21.3.5 Interrupt source determination flag register 0 (INTFLG0) 1509

21.3.6 Interrupt mask register (INTMSK) 1512

21.3.7 Input switch control register (ISC) 1513

21.3.8 Program status word (PSW) 1514

21.4 Interrupt Servicing Operations 1515

21.4.1 Maskable interrupt request acknowledgment 1515

21.4.2 Software interrupt request acknowledgment 1518

21.4.3 Multiple interrupt servicing 1518

21.4.4 Interrupt servicing during division instruction 1522

21.4.5 Interrupt request hold 1524

CHAPTER 22 KEY INTERRUPT FUNCTION 1525

22.1 Functions of Key Interrupt 1525

22.2 Configuration of Key Interrupt 1526

22.3 Register Controlling Key Interrupt 1527

22.3.1 Key return mode register (KRM) 1527

CHAPTER 23 STANDBY FUNCTION 1528

23.1 Standby Function and Configuration 1528

23.1.1 Standby function 1528

23.2 Registers controlling standby function 1529

23.2.1 Oscillation stabilization time counter status register (OSTC) ... 1530
23.2.2 Oscillation stabilization time select register (OSTS) ... 1531
23.2.3 STOP status output control register (STPSTC) ... 1532
23.3 Standby Function Operation ... 1533
23.3.1 HALT mode ... 1533
23.3.2 STOP mode ... 1540
23.3.3 SNOOZE mode ... 1546

CHAPTER 24 RESET FUNCTION ... 1551

24.1 Register for Confirming Reset Source ... 1562
24.1.1 Reset control flag register (RESF) ... 1562
24.1.2 POR/CLM reset confirmation register (POCRES) ... 1563

CHAPTER 25 POWER-ON-RESET CIRCUIT ... 1565

25.1 Functions of Power-on-reset Circuit ... 1565
25.2 Configuration of Power-on-reset Circuit ... 1566
25.3 Operation of Power-on-reset Circuit ... 1566
25.4 Cautions for Power-on-reset Circuit ... 1570

CHAPTER 26 VOLTAGE DETECTOR ... 1572

26.1 Functions of Voltage Detector ... 1572
26.2 Configuration of Voltage Detector ... 1573
26.3 Registers Controlling Voltage Detector ... 1573
26.3.1 Voltage detection register (LVIM) ... 1574
26.3.2 Voltage detection level register (LVIS) ... 1575
26.4 Operation of Voltage Detector ... 1578
26.4.1 When used as reset mode ... 1578
26.4.2 When used as interrupt mode ... 1580
26.4.3 When used as interrupt and reset mode ... 1582
26.5 Cautions for Voltage Detector ... 1588
26.5.1 Checking reset source ... 1588
26.5.2 Delay from the time LVD reset source is generated until the time LVD reset has been generated or released ... 1589

CHAPTER 27 SAFETY FUNCTIONS ... 1590

27.1 Overview of Safety Functions ... 1590
27.2 Registers Used by Safety Functions ... 1592
27.3 Operation of Safety Functions ... 1593
27.3.1 Flash memory CRC operation function (high-speed CRC) ... 1593
27.3.2 CRC operation function (general-purpose CRC) ... 1597

27.3.3 RAM-ECC function 1601
27.3.4 CPU stack pointer monitor function 1607
27.3.5 Clock monitor 1610
27.3.6 RAM guard function 1611
27.3.7 SFR guard function 1612
27.3.8 Invalid memory access detection function 1613
27.3.9 Frequency detection function 1616
27.3.10 A/D test function 1619
27.3.11 Digital output signal level detection function for I/O ports 1624

CHAPTER 28 REGULATOR 1625

28.1 Regulator Overview 1625

CHAPTER 29 OPTION BYTE 1626

29.1 Functions of Option Bytes 1626
29.1.1 User option byte (000C0H to 000C2H/020C0H to 020C2H) 1626
29.1.2 On-chip debug option byte (000C3H/ 020C3H) 1627
29.2 Format of User Option Byte 1628
29.3 Format of On-chip Debug Option Byte 1632
29.4 Setting of Option Byte 1633

CHAPTER 30 FLASH MEMORY 1634

30.1 Serial Programming Using Flash Memory Programmer 1636
30.1.1 Programming Environment 1638
30.1.2 Communication Mode 1638
30.2 Serial Programming Using External Device (that Incorporates UART) 1640
30.2.1 Programming Environment 1640
30.2.2 Communication Mode 1641
30.3 Connection of Pins on Board 1642
30.3.1 P40/TOOL0 pin 1642
30.3.2 RESET pin 1642
30.3.3 Port pins 1643
30.3.4 REGC pin 1643
30.3.5 X1 and X2 pins 1643
30.3.6 Power supply 1643
30.4 Serial Programming Method 1644
30.4.1 Serial programming procedure 1644
30.4.2 Flash memory programming mode 1645
30.4.3 Selecting communication mode 1646
30.4.4 Communication commands 1647

30.5 Processing Time for Each Command when PG-FP5 Is in Use (Reference Value)..... 1648
30.6 Self-Programming 1649
30.6.1 Self-programming procedure 1650
30.6.2 Boot swap function 1651
30.6.3 Flash shield window function 1653
30.7 Security Settings 1654
30.8 Data Flash 1656
30.8.1 Data flash overview 1656
30.8.2 Register controlling data flash memory 1657
30.8.3 Procedure for accessing data flash memory 1658

CHAPTER 31 ON-CHIP DEBUG FUNCTION 1659

31.1 Overview of On-chip Debug Function 1659
31.1.1 Hot Plug-in 1659
31.1.2 Real-time RAM Monitor (RRM) and Dynamic Memory Modification (DMM) by DTC 1659
31.1.3 On-chip Trace 1660
31.2 Connecting E1 On-chip Debugging Emulator to RL78/F13 or RL78/F14 1661
31.3 On-Chip Debug Security ID 1662
31.4 Securing of User Resources 1662
31.4.1 Securement of memory space 1662

CHAPTER 32 BCD CORRECTION CIRCUIT 1665

32.1 BCD Correction Circuit Function 1665
32.2 Registers Used by BCD Correction Circuit 1665
32.3 BCD Correction Circuit Operation 1666

CHAPTER 33 INSTRUCTION SET 1668

33.1 Conventions Used in Operation List 1669
33.1.1 Operand identifiers and specification methods 1669
33.1.2 Description of operation column 1670
33.1.3 Description of flag operation column 1671
33.1.4 PREFIX instruction 1671
33.2 Operation List 1672

CHAPTER 34 ELECTRICAL SPECIFICATIONS (GRADE L) 1690

34.1 Absolute Maximum Ratings 1691
34.2 Oscillator Characteristics 1693
34.2.1 Main System Clock Oscillator Characteristics 1693
34.2.2 On-chip Oscillator Characteristics 1694
34.2.3 Subsystem Clock Oscillator Characteristics 1695

34.2.4 PLL Circuit Characteristics 1696
34.3 DC Characteristics 1697
34.3.1 Pin Characteristics 1697
34.3.2 Supply Current Characteristics 1703
34.4 AC Characteristics 1708
34.4.1 Basic Operation 1708
34.5 Peripheral Functions Characteristics 1711
34.5.1 Serial Array Unit 1711
34.5.2 Serial Interface IICA 1730
34.5.3 On-chip Debug (UART) 1731
34.5.4 LIN/UART Module (RLIN3) UART Mode 1731
34.6 Analog Characteristics 1732
34.6.1 A/D Converter Characteristics 1732
34.6.2 Temperatures Sensor Characteristics 1736
34.6.3 D/A Converter Characteristics 1736
34.6.4 Comparator Characteristics 1736
34.6.5 POR Circuit Characteristics 1737
34.6.6 LVD Circuit Characteristics 1738
34.7 Power Supply Voltage Rising Time 1739
34.8 RAM Data Retention Characteristics 1739
34.9 Flash Memory Programming Characteristics 1740

CHAPTER 35 ELECTRICAL SPECIFICATIONS (GRADE K) 1741

35.1 Absolute Maximum Ratings 1742
35.2 Oscillator Characteristics 1744
35.2.1 Main System Clock Oscillator Characteristics 1744
35.2.2 On-chip Oscillator Characteristics 1745
35.2.3 Subsystem Clock Oscillator Characteristics 1746
35.2.4 PLL Circuit Characteristics 1747
35.3 DC Characteristics 1748
35.3.1 Pin Characteristics 1748
35.3.2 Supply Current Characteristics 1754
35.4 AC Characteristics 1759
35.4.1 Basic Operation 1759
35.5 Peripheral Functions Characteristics 1762
35.5.1 Serial Array Unit 1762
35.5.2 Serial Interface IICA 1781
35.5.3 On-chip Debug (UART) 1782
35.5.4 LIN/UART Module (RLIN3) UART Mode 1782
35.6 Analog Characteristics 1783
35.6.1 A/D Converter Characteristics 1783

35.6.2 Temperatures Sensor Characteristics 1787
35.6.3 D/A Converter Characteristics 1787
35.6.4 Comparator Characteristics 1787
35.6.5 POR Circuit Characteristics 1788
35.6.6 LVD Circuit Characteristics 1789
35.7 Power Supply Voltage Rising Time 1790
35.8 RAM Data Retention Characteristics 1790
35.9 Flash Memory Programming Characteristics 1791

CHAPTER 36 ELECTRICAL SPECIFICATIONS (GRADE Y) 1792

36.1 Absolute Maximum Ratings 1793
36.2 Oscillator Characteristics 1795
36.2.1 Main System Clock Oscillator Characteristics 1795
36.2.2 On-chip Oscillator Characteristics 1796
36.2.3 Subsystem Clock Oscillator Characteristics 1797
36.2.4 PLL Circuit Characteristics 1798
36.3 DC Characteristics 1799
36.3.1 Pin Characteristics 1799
36.3.2 Supply Current Characteristics 1805
36.4 AC Characteristics 1810
36.4.1 Basic Operation 1810
36.5 Peripheral Functions Characteristics 1813
36.5.1 Serial Array Unit 1813
36.5.2 Serial Interface IICA 1831
36.5.3 On-chip Debug (UART) 1832
36.5.4 LIN/UART Module (RLIN3) UART Mode 1832
36.6 Analog Characteristics 1833
36.6.1 A/D Converter Characteristics 1833
36.6.2 Temperatures Sensor Characteristics 1837
36.6.3 D/A Converter Characteristics 1837
36.6.4 Comparator Characteristics 1837
36.6.5 POR Circuit Characteristics 1838
36.6.6 LVD Circuit Characteristics 1839
36.7 Power Supply Voltage Rising Time 1840
36.8 RAM Data Retention Characteristics 1840
36.9 Flash Memory Programming Characteristics 1841

CHAPTER 37 PACKAGE DRAWING 1842

37.1 20-pin products 1842
37.2 30-pin products 1843
37.3 32-pin products 1844

37.4 48-pin products **1845**
37.4.1 48-pin LQFP 1845
37.4.2 48-pin VQFN 1846
37.5 64-pin products **1847**
37.6 80-pin products **1848**
37.7 100-pin products **1849**

APPENDIX A REVISION HISTORY **1850**

Major Revisions in This Edition **1850**

CHAPTER 1 OVERVIEW

1.1 Features

- Minimum instruction execution time can be changed from high speed (0.03125 μs: @ 32 MHz operation with high-speed on-chip oscillator clock or PLL clock) to ultra low-speed (66.6 μs: @ 15 kHz operation with low-speed on-chip oscillator clock)
- General-purpose register: 8 bits × 32 registers (8 bits × 8 registers × 4 banks)
- ROM: 16 to 256 KB
- RAM: 1 to 20 KB
- Data flash memory: 4 KB/8 KB
- High-speed on-chip oscillator clock
  - Selectable from 32 MHz (Typ.), 24 MHz (Typ.), 16 MHz (Typ.), 12 MHz (Typ.), 8 MHz (Typ.), 4 MHz (Typ.), and 1 MHz (Typ.) (Selectable from 64 MHz (Typ.) and 48 MHz (Typ.) when using Timer RD)
- Low-speed on-chip oscillator clock: 15 kHz × 2 channels (one for WWDT and one for CPU and peripherals other than WWDT)
- On-chip PLL (×3, ×4, ×6, ×8)
- On-chip single-power-supply flash memory (with prohibition of block erase/writing function)
- Self-programming (with boot swap function/flash shield window function)
- On-chip debug function
- On-chip power-on-reset (POR) circuit and voltage detector (LVD)
- On-chip watchdog timer (operable with the dedicated low-speed on-chip oscillator clock)
- Multiply/divide/multiply & accumulate instructions are supported
  - 16 bits × 16 bits = 32 bits (Unsigned or signed)
  - 32 bits ÷ 32 bits = 32 bits (Unsigned)
  - 16 bits × 16 bits + 32 bits = 32 bits (Unsigned or signed)
- On-chip key interrupt function
- On-chip clock output/buzzer output controller
- On-chip BCD adjustment
- I/O ports: 16 to 92 (including one input-only pin)
- Timer
  - 16-bit timer array unit: 8 to 16 channels
  - 16-bit timer RD: 2 channels (six triangle-wave outputs; sawtooth wave/triangle-wave modulation)
  - 16-bit timer RJ: 1 channel
  - Watchdog timer: 1 channel
  - Real-time clock: 1 channel
- Serial interface
  - CSI
  - UART/UART (LIN-bus supported)
  - LIN module (master/slave supported)
  - I^2C/simplified I^2C
  - CAN interface (RS-CAN lite)
- 8/10-bit resolution A/D converter (V_{DD} = 2.7 to 5.5 V): 4 to 31 channels
- <R> DTC (Max. 44 sources)
- ELC (Max. 26 channels for event link source, Max. 9 channels for event link destination) Note
- <R> Safety functions (CRC calculation, Clock monitor, AD test, SFR guard, etc.)

- 8-bit D/A converter Note
- On-chip comparator: 1 channel (input pin: 4 channels) Note
- Power supply voltage: V_{DD} = 2.7 to 5.5 V
- Operating ambient temperature: T_A = -40 to +105ºC (grade L)/T_A = -40 to +125°C (grade K)/T_A = -40 to +150ºC (grade Y)

Note Only available in the RL78/F14.

1.1.1 Applications

General automotive electrical applications (motor control, door control, headlight control, etc.), motorcycle engine control

1.2 Product Lineup

Table 1-1. RL78/F14 Lineup

Code Flash	Data Flash	RAM	Pin Count						
			100 pins	80 pins	64 pins	48 pins (QFN)	48 pins (QFP)	32 pins	30 pins
48 KB	4 KB	4 KB	—	—	—	R5F10PGD	R5F10PGD R5F10PGDC	R5F10PBD	R5F10PAD
64 KB		6 KB	R5F10PPE R5F10PPEC	R5F10PME R5F10PMEC	R5F10PLE R5F10PLEC	R5F10PGE	R5F10PGE R5F10PGEC	R5F10PBE	R5F10PAE
96 KB		8 KB	R5F10PPF R5F10PPFC	R5F10PMF R5F10PMFC	R5F10PLF R5F10PLFC	R5F10PGF	R5F10PGF R5F10PGF	—	—
128 KB	8 KB	10 KB	R5F10PPG R5F10PPGC	R5F10PMG R5F10PMGC	R5F10PLG R5F10PLGC	R5F10PGG	R5F10PGG R5F10PGGC	—	—
192 KB		16 KB	R5F10PPH R5F10PPHC	R5F10PMH R5F10PMHC	R5F10PLH R5F10PLHC	R5F10PGH	R5F10PGH R5F10PGHC	—	—
256 KB		20 KB	R5F10PPJ R5F10PPJC	R5F10PMJ R5F10PMJC	R5F10PLJ R5F10PLJC	R5F10PGJ	R5F10PGJ R5F10PGJC	—	—

Table 1-2. RL78/F13 (CAN and LIN incorporated) Lineup

Code Flash	Data Flash	RAM	Pin Count					
			80 pins	64 pins	48 pins (QFN)	48 pins (QFP)	32 pins	30 pins
32 KB	4 KB	2 KB	—	R5F10BLC R5F10BLCC	R5F10BGC	R5F10BGC R5F10BGCC	R5F10BBC	R5F10BAC
48 KB		3 KB	—	R5F10BLD R5F10BLDC	R5F10BGD	R5F10BGD R5F10BGDC	R5F10BBD	R5F10BAD
64 KB		4 KB	R5F10BME R5F10BMEC	R5F10BLE R5F10BLEC	R5F10BGE	R5F10BGE R5F10BGEC	R5F10BBE	R5F10BAE
96 KB		6 KB	R5F10BMF R5F10BMFC	R5F10BLF R5F10BLFC	R5F10BGF	R5F10BGF R5F10BGFC	R5F10BBF	R5F10BAF
128 KB		8 KB	R5F10BMG R5F10BMGC	R5F10BLG R5F10BLGC	R5F10BGG	R5F10BGG R5F10BGGC	R5F10BBG	R5F10BAG

Table 1-3. RL78/F13 (LIN incorporated) Lineup

Code Flash	Data Flash	RAM	Pin Count						
			80 pins	64 pins	48 pins (QFN)	48 pins (QFP)	32 pins	30 pins	20 pins
16 KB	4 KB	1 KB	—	—	R5F10AGA	R5F10AGA R5F10AGAC	R5F10ABA	R5F10AAA	R5F10A6A
32 KB		2 KB	—	R5F10ALC R5F10ALCC	R5F10AGC	R5F10AGC R5F10AGCC	R5F10ABC	R5F10AAC	R5F10A6C
48 KB		3 KB	—	R5F10ALD R5F10ALDC	R5F10AGD	R5F10AGD R5F10AGDC	R5F10ABD	R5F10AAD	R5F10A6D
64 KB		4 KB	R5F10AME R5F10AMEC	R5F10ALE R5F10ALEC	R5F10AGE	R5F10AGE R5F10AGEC	R5F10ABE	R5F10AAE	R5F10A6E
96 KB		6 KB	R5F10AMF R5F10AMFC	R5F10ALF R5F10ALFC	R5F10AGF	R5F10AGF R5F10AGFC	—	—	—
128 KB		8 KB	R5F10AMG R5F10AMGC	R5F10ALG R5F10ALGC	R5F10AGG	R5F10AGG R5F10AGGC	—	—	—

1.3 Function Overview

1.3.1 RL78/F14 Functions List

Table 1-4. RL78/F14 Functions List (1/2)

Series Name			R5F10PP	R5F10PM	R5F10PL	R5F10PG	R5F10PB	R5F10PA
		Pin Count	100 pins	80 pins	64 pins	48 pins	32 pins	30 pins
Code flash			64 to 256KB			48 to 256KB	48KB, 64KB	
Data flash			8KB/4KB				4KB	
RAM			6 to 20KB			4 to 20KB	48KB, 64KB	
Supply voltage range			2.7 V to 5.5 V					
Maximum operation frequency			32 MHz (grade L), 24 MHz (grade K, grade Y)					
System clock	Main system clock oscillator	Crystal/ceramic/ square wave	1 to 20 MHz (operating at 2.7 V to 5.5 V)					
	High-speed on-chip oscillator	Normal high accuracy	32 MHz (typ.)					
	Low-speed on-chip oscillator	For low-speed operation	15 kHz (typ.)					
	Subsystem clock oscillator		32.768 kHz[Note 7]				None	
	PLL		PLL multiplication factor: ×3/×4/×6/×8					
Clock for peripherals	Low-speed on-chip oscillator	For peripherals other than WDT	15 kHz (typ.)					
		For WDT	15 kHz (typ.)					
POR		When power supply is rising	1.56 V (typ.)					
		When power supply is falling	1.55 V (typ.)					
LVD	V_{DD} voltage detection	When power supply is rising	2.81 V (typ.) to 4.74 V (typ.) (in 6 steps)					
		When power supply is falling	2.75 V (typ.) to 4.64 V (typ.) (in 6 steps)					
Safety functions	WWDT (window watchdog timer)		Yes					
	Illegal instruction execution detection function		Yes					
	Flash memory CRC operation function		Yes					
	RAM1 bit error correction function		Yes					
	RAM2 bit error detection function		Yes					
	Invalid memory access detection function		Yes					
	Frequency detection function		Yes					
	Clock monitor function		Yes					
	Stack pointer monitor function		Yes					
	I/O port output signal level detection function		Yes					
	A/D test function		Yes					
I/O ports	Input/Output	CMOS	86ch	68ch	52ch	38ch	25ch	23ch
	Output	CMOS	1ch				None	
	Input	Shared with oscillator pins	4ch[Note 7]				2ch	
		Input only	1ch					
Power supply pins	For internal circuits		V_{DD}, V_{SS}, REGC					
	For I/O ports		EV_{DD0}, EV_{SS0} EV_{DD1}, EV_{SS1}	EV_{DD0}, EV_{SS0}		None		
	For analog circuits (AD, DA, COMP)		V_{DD}, V_{SS} (AV_{REFP}, AV_{REFM}: For AD)					
Multiply/divide and multiply-accumulate functions	Multiply		16 bits × 16 bits (signed)					
			16 bits × 16 bits (unsigned)					
	Divide		32 bits ÷ 32 bits (unsigned)					
	Multiply-accumulate		16 bits × 16 bits + 32 bits (signed)					
			16 bits × 16 bits + 32 bits (unsigned)					
	Arithmetic instructions (extended instruction set)		Yes					
Vectored interrupt sources	External	Products with at least 128 Kbytes of code flash memory	16ch [Notes 4, 6]	16ch [Notes 4, 6]	15ch [Notes 3, 6]	14ch [Note 2]	9ch [Note 1]	
		Products with up to 96 Kbytes of code flash memory		14ch [Notes 3, 5]	14ch [Notes 3, 5]	13ch [Note 2]		
	Internal	Products with at least 128 Kbytes of code flash memory	48ch [Note 4]	48ch [Note 4]	48ch [Note 3]	48ch [Note 2]	41ch [Note 1]	40ch [Note 1]
		Products with up to 96 Kbytes of code flash memory		41ch [Note 3]	41ch [Note 3]	41ch [Note 2]		
Key return detection			8ch				6ch	8ch
DTC			44 sources	44 sources/38 sources			37 sources	
Timer	TAU		16 bits (8ch × 2)	16 bits (8ch × 2/8ch + 4ch)			16 bits (8ch + 4ch)	
	RTC		1ch					
	Timer RJ		16 bits × 1					
	Timer RD		16 bits × 2					
Serial I/F	CSI/simplified I^2C /UART		4ch/4ch/2ch				3ch/3ch/2ch	
		SPI	Yes					
	Multimaster I^2C		1ch					None
	LIN/UART module (RLIN3)		2ch	2ch/1ch			1ch	
	CAN interface (RS-CAN lite)		1ch					

(**Notes** and **Caution** are listed on the next page.)

Table 1-4. RL78/F14 Functions List (2/2)

Series Name		R5F10PP	R5F10PM	R5F10PL	R5F10PG	R5F10PB	R5F10PA
	Pin Count	100 pins	80 pins	64 pins	48 pins	32 pins	30 pins
A/D converter 10-bit SAR	V_{DD}	24ch	18ch/16ch	17ch/16ch	13ch	8ch	10ch
	EV_{DD}	7ch	7ch/4ch	3ch	5ch/2ch	2ch	
	Internal	2ch					
D/A converter	8-bit	1ch					
Comparator		1ch					
ELC		Link source: 26ch Link destination: 9ch	Link source: 26ch/20ch Link destination: 9ch/7ch			Link source: 20ch Link destination: 7ch	
PCLBUZ		1ch				None	
Self-programming		Yes					
On-chip debug	Trace	Yes					
	Hot plug-in	Yes					
Option byte		Yes					

Notes 1. The following pairs of internal and external sources are each counted as a single source in this number: INTP4 and INTSPM, INTP5 and INTCMP0.

2. The following pairs of internal and external sources are each counted as a single source in this number: INTP4 and INTSPM, INTP5 and INTCMP0, INTP6 and INTTM11H, INTP7 and INTTM13H, INTP8 and INTRTC, INTP9 and INTTM01H.

3. The following pairs of internal and external sources are each counted as a single source in this number: INTP4 and INTSPM, INTP5 and INTCMP0, INTP6 and INTTM11H, INTP7 and INTTM13H, INTP8 and INTRTC, INTP9 and INTTM01H, INTP10 and INTTM03H.

4. The following pairs of internal and external sources are each counted as a single source in this number: INTP4 and INTSPM, INTP5 and INTCMP0, INTP6 and INTTM11H, INTP7 and INTTM13H, INTP8 and INTRTC, INTP9 and INTTM01H, INTP10 and INTTM03H, INTP13 and INTCLM.

5. INTP11 and INTLIN0WUP are counted as a single source because using them at the same time is not possible.

6. Both sources in the following pairs are counted as a single source in this number: INTP11 and INTLIN0WUP, INTP12 and INTLIN1WUP.

7. Do not use the XT1 and XT2 pin functions in grade-Y products.

Caution For details, see 1.5 Pin Configurations.

1.3.2 RL78/F13 (CAN and LIN incorporated) Functions List

Table 1-5. RL78/F13 (CAN and LIN incorporated) Functions List

Series Name			R5F10BM	R5F10BL	R5F10BG	R5F10BB	R5F10BA
		Pin Count	80 pins	64 pins	48 pins	32 pins	30 pins
Code flash			64 to 128KB	32 to 128KB			
Data flash			4KB				
RAM			4 to 8KB	2 to 8KB			
Supply voltage range			2.7 V to 5.5 V				
Maximum operation frequency			32 MHz (grade L), 24 MHz (grade K, grade Y)				
System clock	Main system clock oscillator	Crystal/ceramic/ square wave	1 to 20 MHz (operating at 2.7 V to 5.5 V)				
	High-speed on-chip oscillator	Normal high accuracy	32 MHz (typ.)				
	Low-speed on-chip oscillator	For low-speed operation	15 kHz (typ.)				
	Subsystem clock oscillator		32.768 kHz Note 5			None	
	PLL		PLL multiplication factor: ×3/×4/×6/×8				
Clock for peripherals	Low-speed on-chip oscillator	For peripherals other than WDT	15 kHz (typ.)				
		For WDT	15 kHz (typ.)				
POR		When power supply is rising	1.56 V (typ.)				
		When power supply is falling	1.55 V (typ.)				
LVD	V_{DD} voltage detection	When power supply is rising	2.81 V (typ.) to 4.74 V (typ.) (in 6 steps)				
		When power supply is falling	2.75 V (typ.) to 4.64 V (typ.) (in 6 steps)				
Safety functions	WWDT (window watchdog timer)		Yes				
	Illegal instruction execution detection function		Yes				
	Flash memory CRC operation function		Yes				
	RAM1 bit error correction function		Yes				
	RAM2 bit error detection function		Yes				
	Invalid memory access detection function		Yes				
	Frequency detection function		Yes				
	Clock monitor function		Yes				
	Stack pointer monitor function		Yes				
	I/O port output signal level detection function		Yes				
	A/D test function		Yes				
I/O ports	Input/Output	CMOS	68ch	52ch	38ch	25ch	23ch
	Output	CMOS	1ch			None	
	Input	Shared with oscillator pins	4ch Note 5			2ch	
		Input only	1ch				
Power supply pins	For internal circuits		V_{DD}, V_{SS}, REGC				
	For I/O ports		EV_{DD0}, EV_{SS0}		None		
	For analog circuits (AD, DA, COMP)		V_{DD}, V_{SS} (AV_{REFP}, AV_{REFM}: For AD)				
Multiply/divide and multiply-accumulate functions	Multiply		16 bits × 16 bits (signed)				
			16 bits × 16 bits (unsigned)				
	Divide		32 bits ÷ 32 bits (unsigned)				
	Multiply-accumulate		16 bits × 16 bits + 32 bits (signed)				
			16 bits × 16 bits + 32 bits (unsigned)				
	Arithmetic instructions (extended instruction set)		Yes				
Vectored interrupt sources	External		14ch Notes 3, 4		13ch Note 2	9ch Note 1	
	Internal		40ch Note 3		40ch Note 2	40ch Note 1	39ch Note 1
Key return detection			8ch			6ch	8ch
DTC			37 sources			36 sources	
Timer	TAU		16 bits (8ch + 4ch)				
	RTC		1ch				
	Timer RJ		16 bits × 1				
	Timer RD		16 bits × 2				
Serial I/F	CSI/simplified I^2C /UART		4ch/4ch/2ch			3ch/3ch/2ch	
		SPI	Yes				
	Multimaster I^2C		1ch				None
	LIN/UART module (RLIN3)		1ch				
	CAN interface (RS-CAN lite)		1ch				
A/D converter 10-bit SAR	V_{DD}		16ch	16ch	13ch	8ch	10ch
	EV_{DD}		4ch	3ch	2ch		
	Internal		2ch				
D/A converter	8-bit		None				
Comparator			None				
ELC			None				
PCLBUZ			1ch			None	
Self-programming			Yes				
On-chip debug	Trace		Yes				
	Hot plug-in		Yes				
Option byte			Yes				

(**Notes** and **Caution** are listed on the next page.)

Notes 1. The following pairs of internal and external sources are each counted as a single source in this number: INTP4 and INTSPM.

2. The following pairs of internal and external sources are each counted as a single source in this number: INTP4 and INTSPM, INTP6 and INTTM11H, INTP7 and INTTM13H, INTP8 and INTRTC, INTP9 and INTTM01H.

3. The following pairs of internal and external sources are each counted as a single source in this number: INTP4 and INTSPM, INTP6 and INTTM11H, INTP7 and INTTM13H, INTP8 and INTRTC, INTP9 and INTTM01H, INTP10 and INTTM03H.

4. INTP11 and INTLIN0WUP are counted as a single source because using them at the same time is not possible.

5. Do not use the XT1 and XT2 pin functions in grade-Y products.

Caution For details, see 1.5 Pin Configurations.

1.3.3 RL78/F13 (LIN incorporated) Functions List

Table 1-6. RL78/F13 (LIN incorporated) Functions List (1/2)

Series Name			R5F10AM	R5F10AL	R5F10AG	R5F10AB	R5F10AA	R5F10A6
		Pin Count	80 pins	64 pins	48 pins	32 pins	30 pins	20 pins
Code flash			64 to 128KB	32 to 128KB	16 to 128KB	16 to 64KB		
Data flash			4KB					
RAM			4 to 8KB	2 to 8KB	1 to 8KB	1 to 4KB		
Supply voltage range			2.7 V to 5.5 V					
Maximum operation frequency			32 MHz (grade L), 24 MHz (grade K, grade Y)					
System clock	Main system clock oscillator	Crystal/ceramic/ square wave	1 to 20 MHz (operating at 2.7 V to 5.5 V)					
	High-speed on-chip oscillator	Normal high accuracy	32 MHz (typ.)					
	Low-speed on-chip oscillator	For low-speed operation	15 kHz (typ.)					
	Subsystem clock oscillator		32.768 kHz Note 6			None		
	PLL		PLL multiplication factor: ×3/×4/×6/×8					
Clock for peripherals	Low-speed on-chip oscillator	For peripherals other than WDT	15 kHz (typ.)					
		For WDT	15 kHz (typ.)					
POR		When power supply is rising	1.56 V (typ.)					
		When power supply is falling	1.55 V (typ.)					
LVD	V_{DD} voltage detection	When power supply is rising	2.81 V (typ.) to 4.74 V (typ.) (in 6 steps)					
		When power supply is falling	2.75 V (typ.) to 4.64 V (typ.) (in 6 steps)					
Safety functions	WWDT (window watchdog timer)		Yes					
	Illegal instruction execution detection function		Yes					
	Flash memory CRC operation function		Yes					
	RAM1 bit error correction function		Yes					
	RAM2 bit error detection function		Yes					
	Invalid memory access detection function		Yes					
	Frequency detection function		Yes					
	Clock monitor function		Yes					
	Stack pointer monitor function		Yes					
	I/O port output signal level detection function		Yes					
	A/D test function		Yes					
I/O ports	Input/Output	CMOS	68ch	52ch	38ch	25ch	23ch	13ch
	Output	CMOS	1ch			None		
	Input	Shared with oscillator pins	4ch Note 6			2ch		
		Input only	1ch					
Power supply pins	For internal circuits		V_{DD}, V_{SS}, REGC					
	For I/O ports		EV_{DD0}, EV_{SS0}		None			
	For analog circuits (AD, DA, COMP)		V_{DD}, V_{SS} (AV_{REFP}, AV_{REFM}: For AD)					
Multiply/divide and multiply-accumulate functions	Multiply		16 bits × 16 bits (signed)					
			16 bits × 16 bits (unsigned)					
	Divide		32 bits ÷ 32 bits (unsigned)					
	Multiply-accumulate		16 bits × 16 bits + 32 bits (signed)					
			16 bits × 16 bits + 32 bits (unsigned)					
	Arithmetic instructions (extended instruction set)		Yes					
Vectored interrupt sources	External	Products with at least 96 Kbytes of code flash memory	13ch Note 4, 5		12ch Note 3	—		
		Products with up to 64 Kbytes of code flash memory	13ch Note 4, 5	10ch Note 2		8ch Note 2		7ch Note 2
	Internal	Products with at least 96 Kbytes of code flash memory	35ch Note 4		35ch Note 3	—		
		Products with up to 64 Kbytes of code flash memory	35ch Note 4	26ch Note 2				
Key return detection			8ch			6ch	8ch	2ch
DTC	Products with at least 96 Kbytes of code flash memory		36 sources			—		
	Products with up to 64 Kbytes of code flash memory		36 sources	30 sources		29 sources		28 sources

(**Notes** and **Caution** are listed on the next page.)

Table 1-6. RL78/F13 (LIN incorporated) Functions List (2/2)

Series Name			R5F10AM	R5F10AL	R5F10AG	R5F10AB	R5F10AA	R5F10A6
		Pin Count	80 pins	64 pins	48 pins	32 pins	30 pins	20 pins
TAU	Products with at least 96 Kbytes of code flash memory		16 bits (8ch + 4ch)			—		
	Products with up to 64 Kbytes of code flash memory		16 bits (8ch + 4ch)	16 bits (8ch)				
Timer	RTC		1ch					
	Timer RJ		16 bits × 1 Note 1					
	Timer RD		16 bits × 2					
Serial I/F	CSI/simplified I²C /UART	Products with at least 96 Kbytes of code flash memory	4ch/4ch/2ch			—		
		Products with up to 64 Kbytes of code flash memory	4ch/4ch/2ch	2ch/2ch/1ch				
	SPI		Yes					
	Multimaster I²C	Products with at least 96 Kbytes of code flash memory	1ch			—		
		Products with up to 64 Kbytes of code flash memory	1ch	None				
	LIN/UART module (RLIN3)		1ch					
	CAN interface (RS-CAN lite)		None					
A/D converter 10-bit SAR	V_{DD}	Products with at least 96 Kbytes of code flash memory	16ch	16ch	13ch	—		
		Products with up to 64 Kbytes of code flash memory	16ch	12ch	12ch	8ch	10ch	4ch
	EV_{DD}	Products with at least 96 Kbytes of code flash memory	4ch	3ch	2ch	—		
		Products with up to 64 Kbytes of code flash memory	4ch	None				
	Internal		2ch					
D/A converter	8-bit		None					
Comparator			None					
ELC			None					
PCLBUZ			1ch			None		
Self-programming			Yes					
On-chip debug	Trace		Yes					
	Hot plug-in		Yes					
Option byte			Yes					

Notes 1. The 20-pin products do not have TRJIO0 and TRJO0 pins.

2. The following pairs of internal and external sources are each counted as a single source in this number: INTP4 and INTSPM.

3. The following pairs of internal and external sources are each counted as a single source in this number: INTP4 and INTSPM, INTP6 and INTTM11H, INTP7 and INTTM13H, INTP8 and INTRTC, INTP9 and INTTM01H.

4. The following pairs of internal and external sources are each counted as a single source in this number: INTP4 and INTSPM, INTP6 and INTTM11H, INTP7 and INTTM13H, INTP8 and INTRTC, INTP9 and INTTM01H, INTP10 and INTTM03H.

<R> **5.** INTP11 and INTLIN0WUP are counted as a single source because using them at the same time is not possible.

6. Do not use the XT1 and XT2 pin functions in grade-Y products.

Caution For details, see 1.5 Pin Configurations.

1.4 Block Diagram

1.4.1 RL78/F14: Block Diagram of R5F10PPn (n = E, F, G, H, J) 100-pin Products

Figure 1-1. Block Diagram

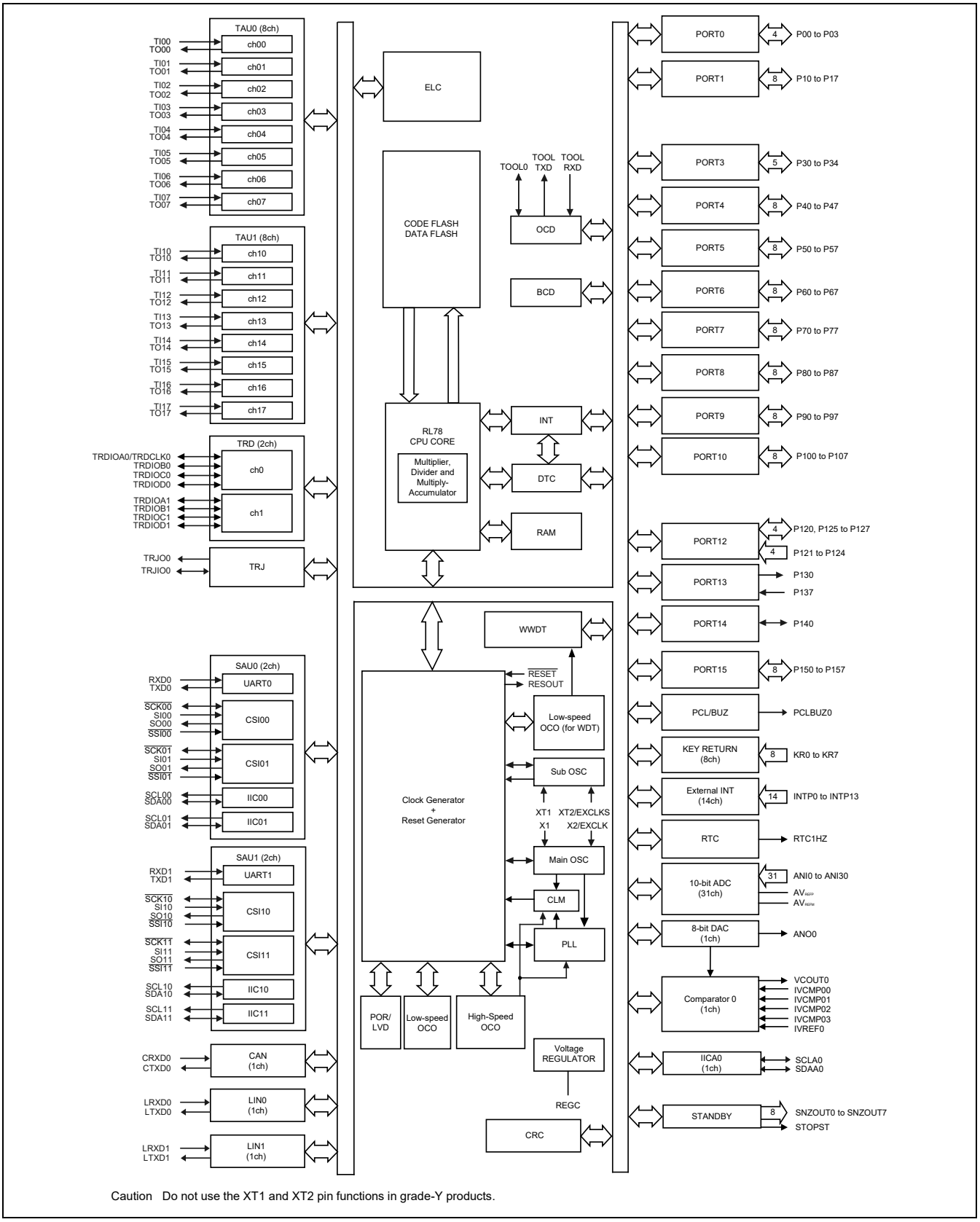

Caution Do not use the XT1 and XT2 pin functions in grade-Y products.

1.4.2 RL78/F14: Block Diagram of R5F10PMn (n = G, H, J) 80-pin Products

Figure 1-2. Block Diagram

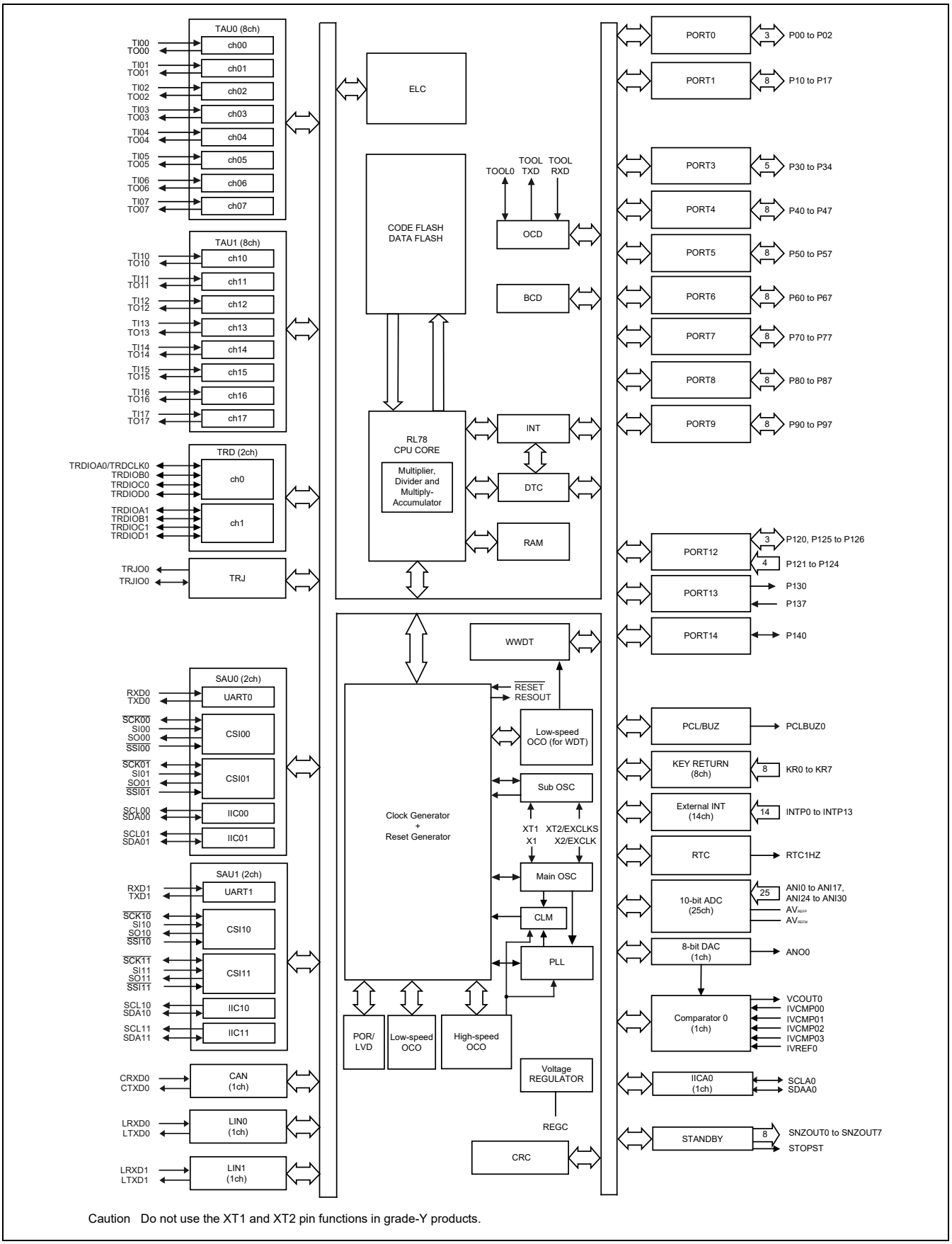

Caution Do not use the XT1 and XT2 pin functions in grade-Y products.

1.4.3 RL78/F14: Block Diagram of R5F10PLn (n = G, H, J) 64-pin Products

Figure 1-3. Block Diagram

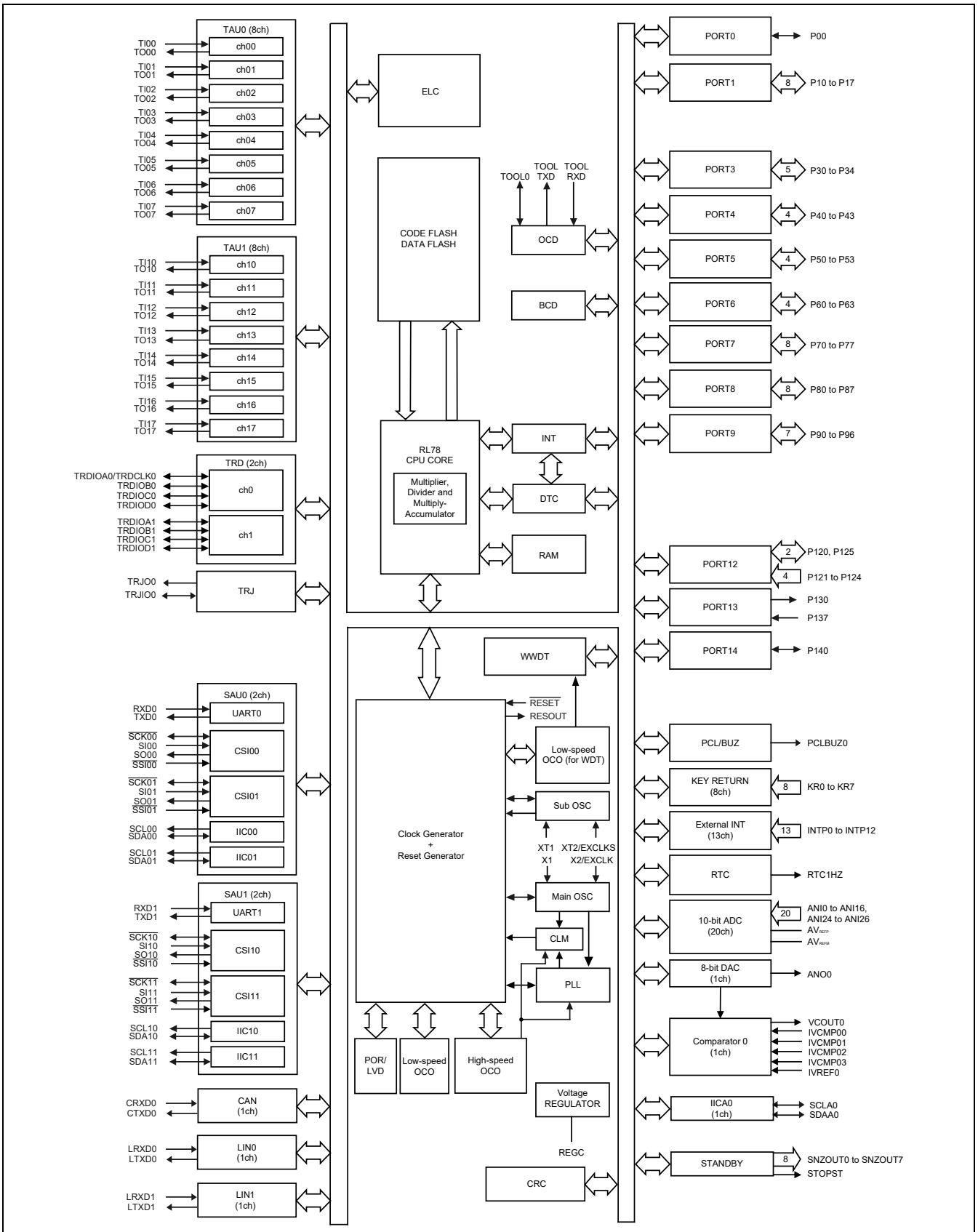

Cautions 1. Do not use the XT1 and XT2 pin functions in grade-Y products.

1.4.4 RL78/F14: Block Diagram of R5F10PGn (n = G, H, J) 48-pin Products

Figure 1-4. Block Diagram

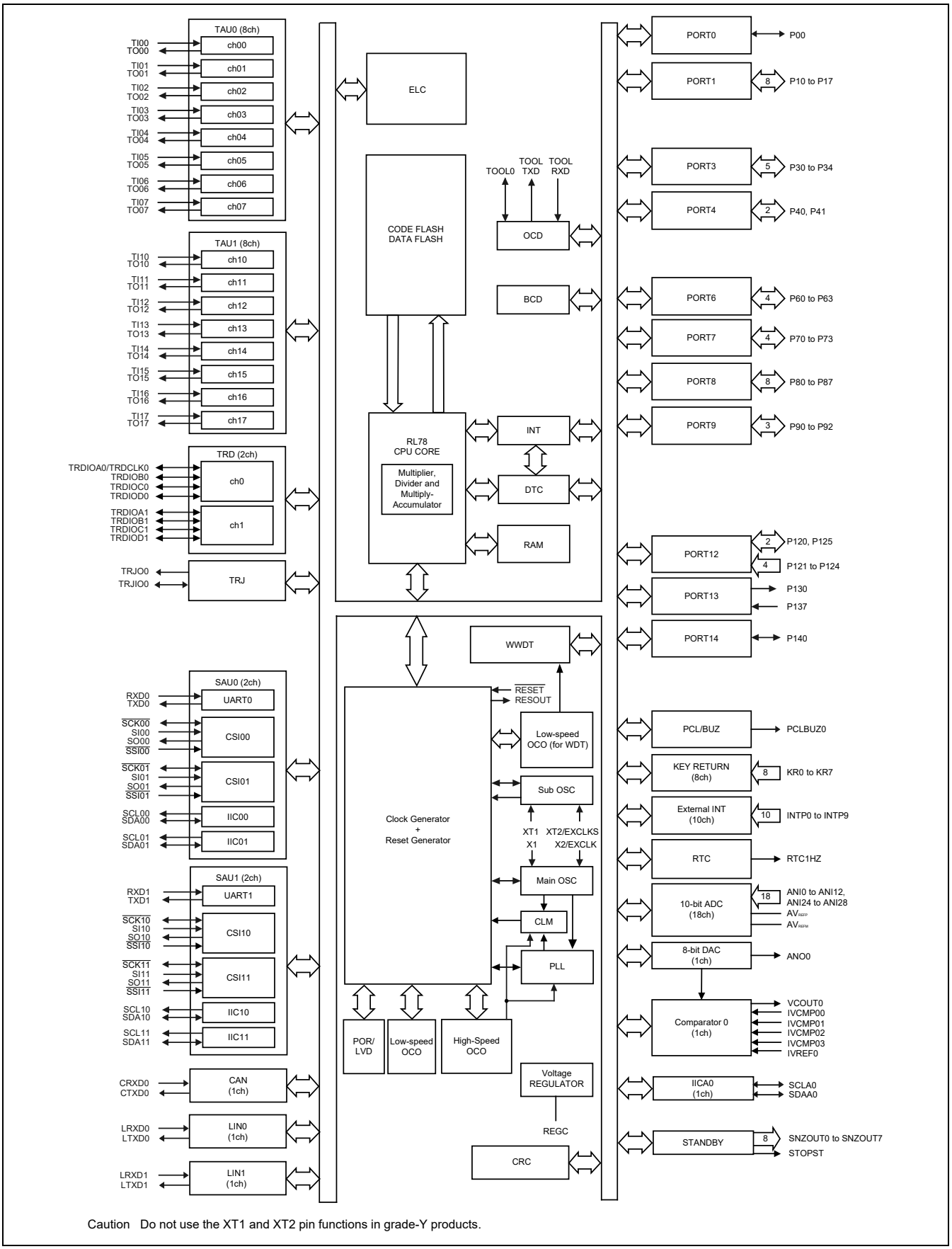

Caution Do not use the XT1 and XT2 pin functions in grade-Y products.

1.4.5 RL78/F14: Block Diagram of R5F10PMn (n = E, F) 80-pin Products

<R> **Figure 1-5. Block Diagram**

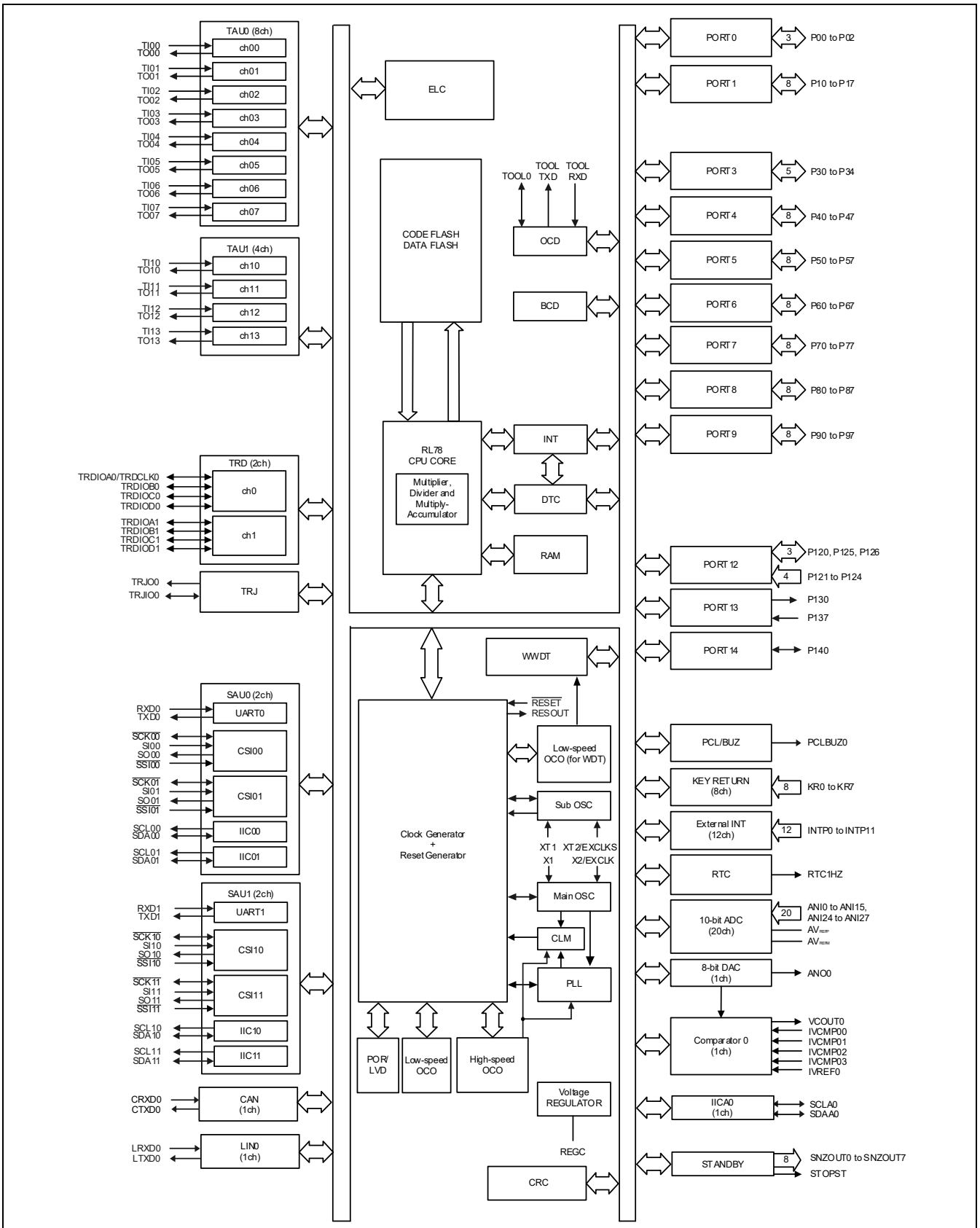

Caution Do not use the XT1 and XT2 pin functions in grade-Y products.

1.4.6 RL78/F14: Block Diagram of R5F10PLn (n = E, F) 64-pin Products

Figure 1-6. Block Diagram

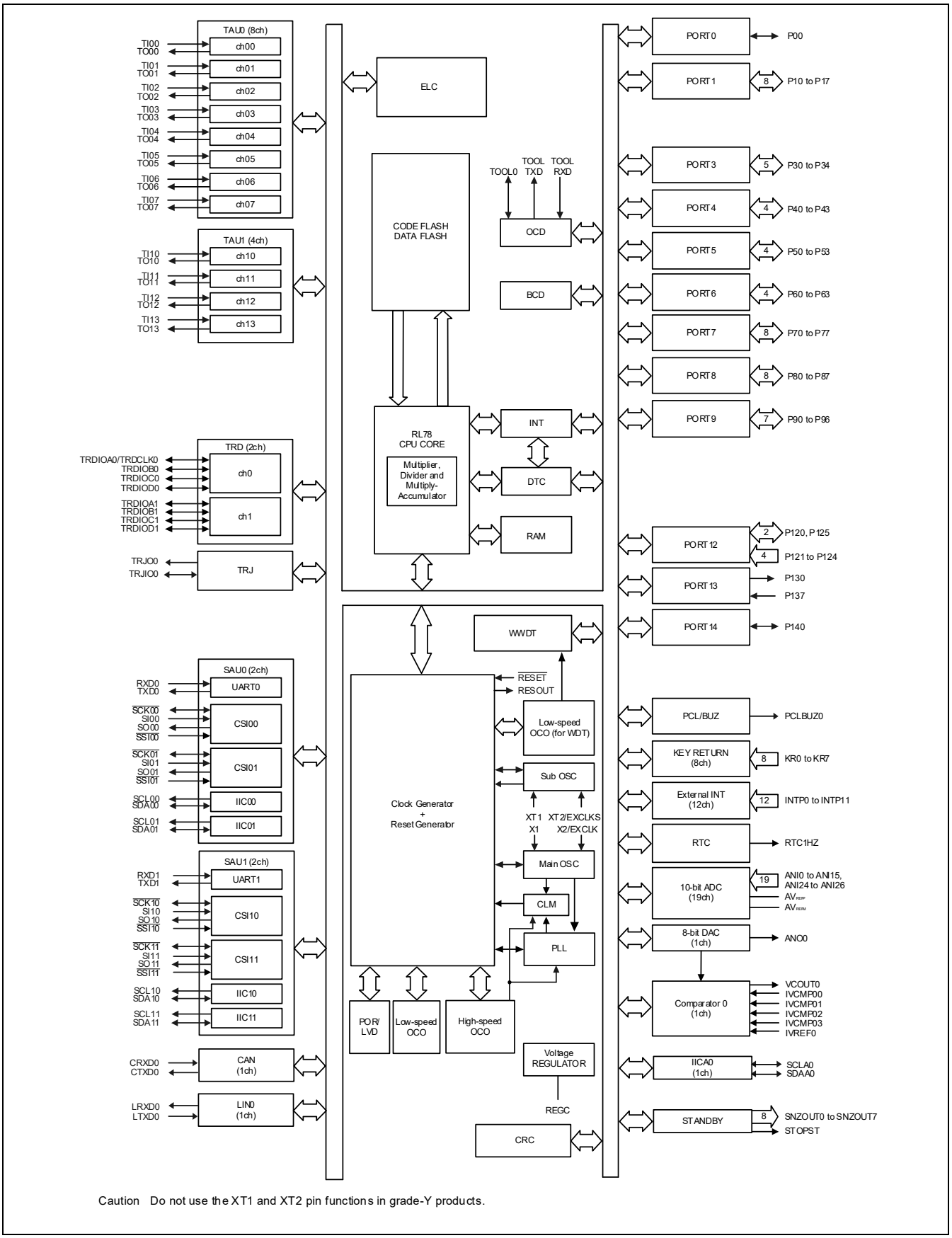

Caution Do not use the XT1 and XT2 pin functions in grade-Y products.

1.4.7 RL78/F14: Block Diagram of R5F10PGn (n = D, E, F) 48-pin Products

Figure 1-7. Block Diagram

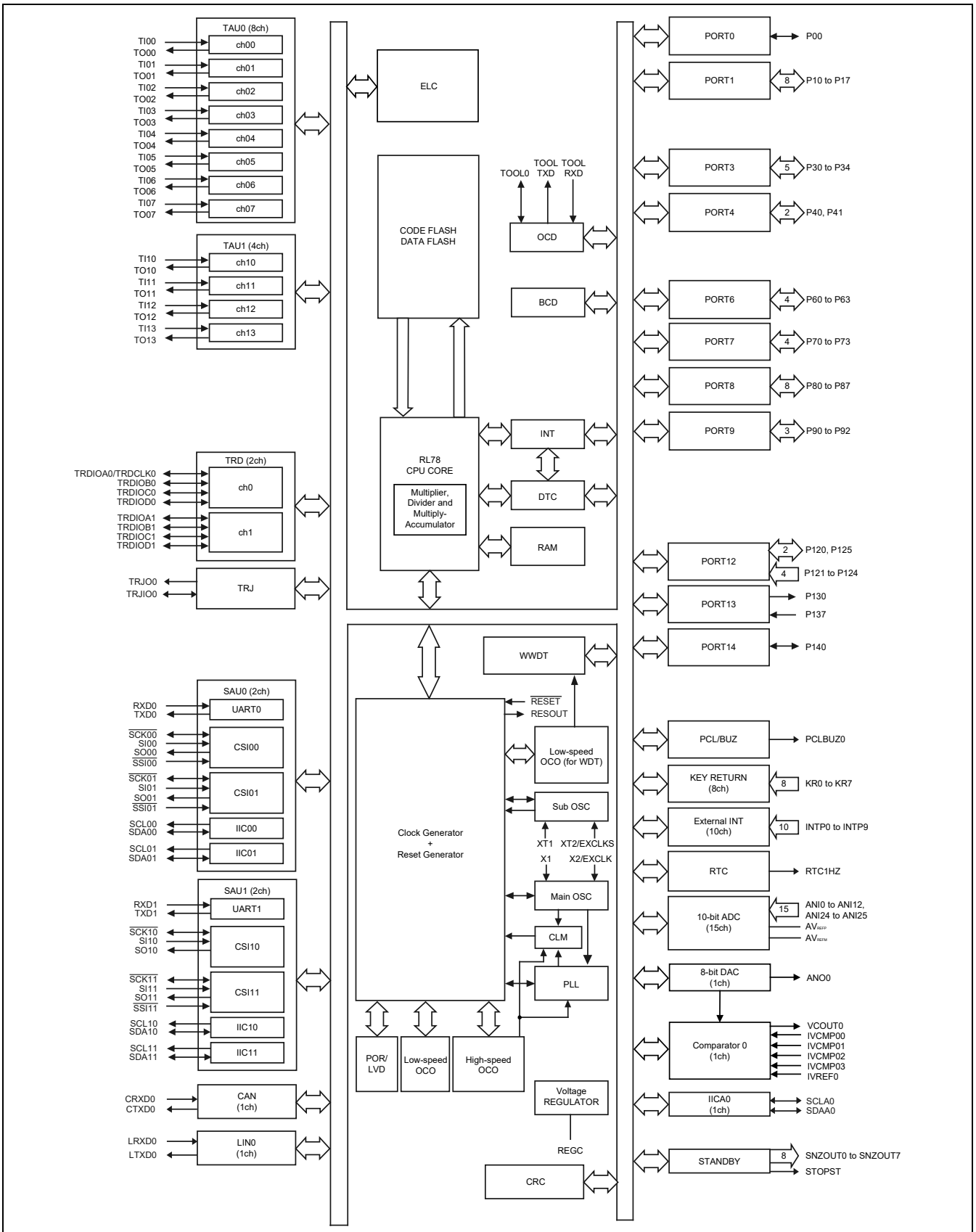

Caution Do not use the XT1 and XT2 pin functions in grade-Y products.

1.4.8 RL78/F14: Block Diagram of R5F10PBn (n = D, E) 32-pin Products

Figure 1-8. Block Diagram

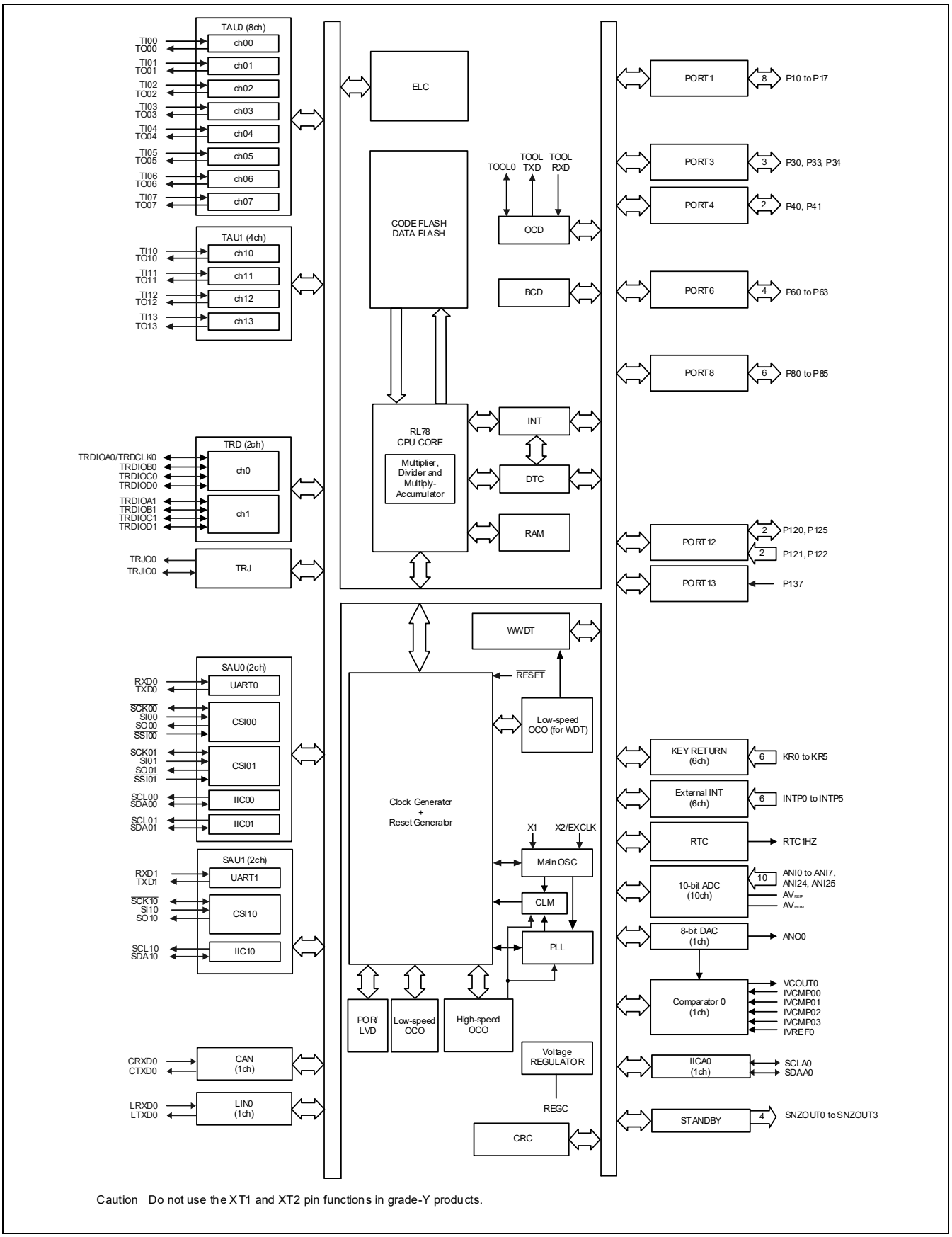

Caution Do not use the XT1 and XT2 pin functions in grade-Y products.

1.4.9 RL78/F14: Block Diagram of R5F10PAn (n = D, E) 30-pin Products

Figure 1-9. Block Diagram

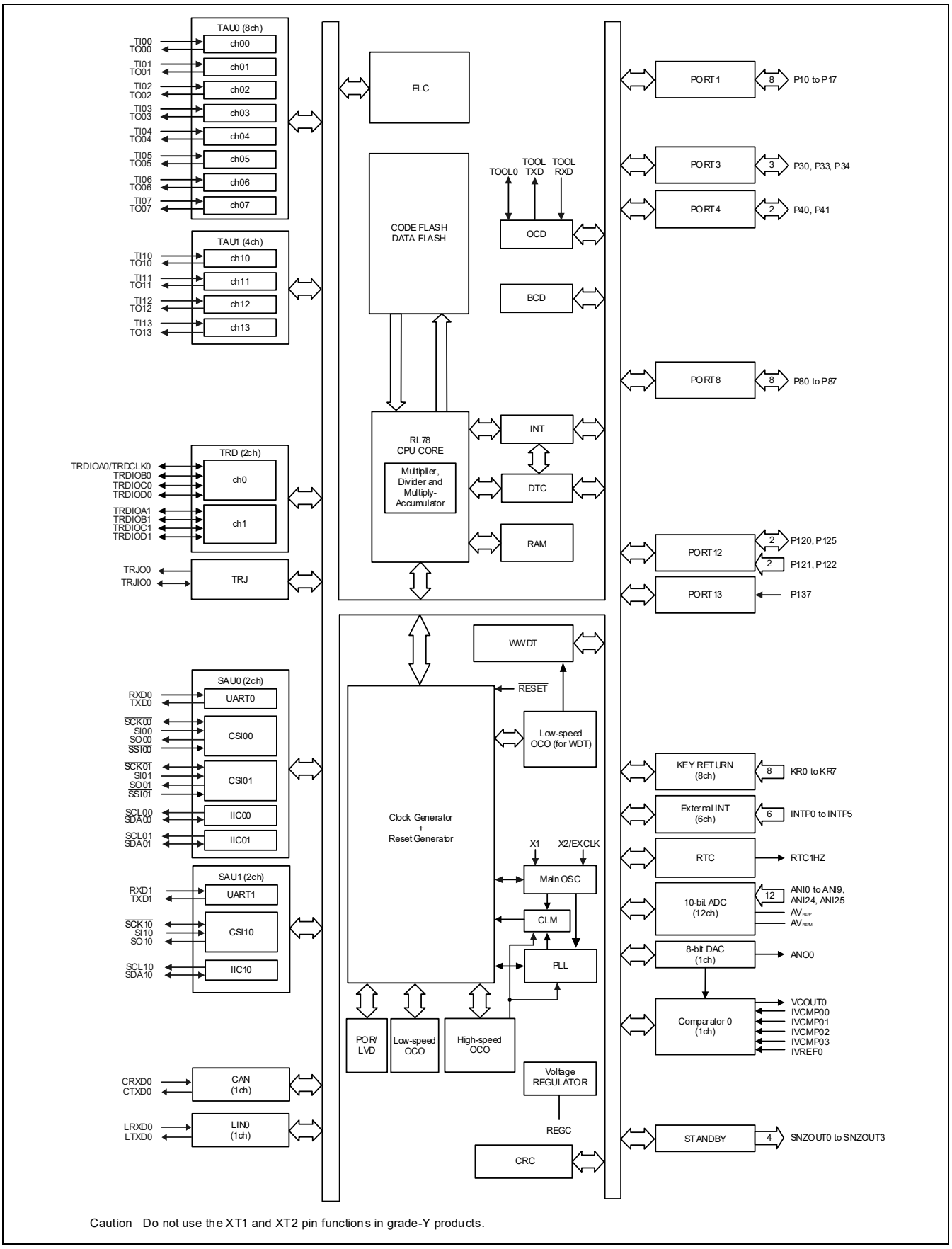

Caution Do not use the XT1 and XT2 pin functions in grade-Y products.

1.4.10 RL78/F13: Block Diagram of R5F10BMn (n = E, F, G) (CAN and LIN incorporated) 80-pin Products

<R>

Figure 1-10. Block Diagram

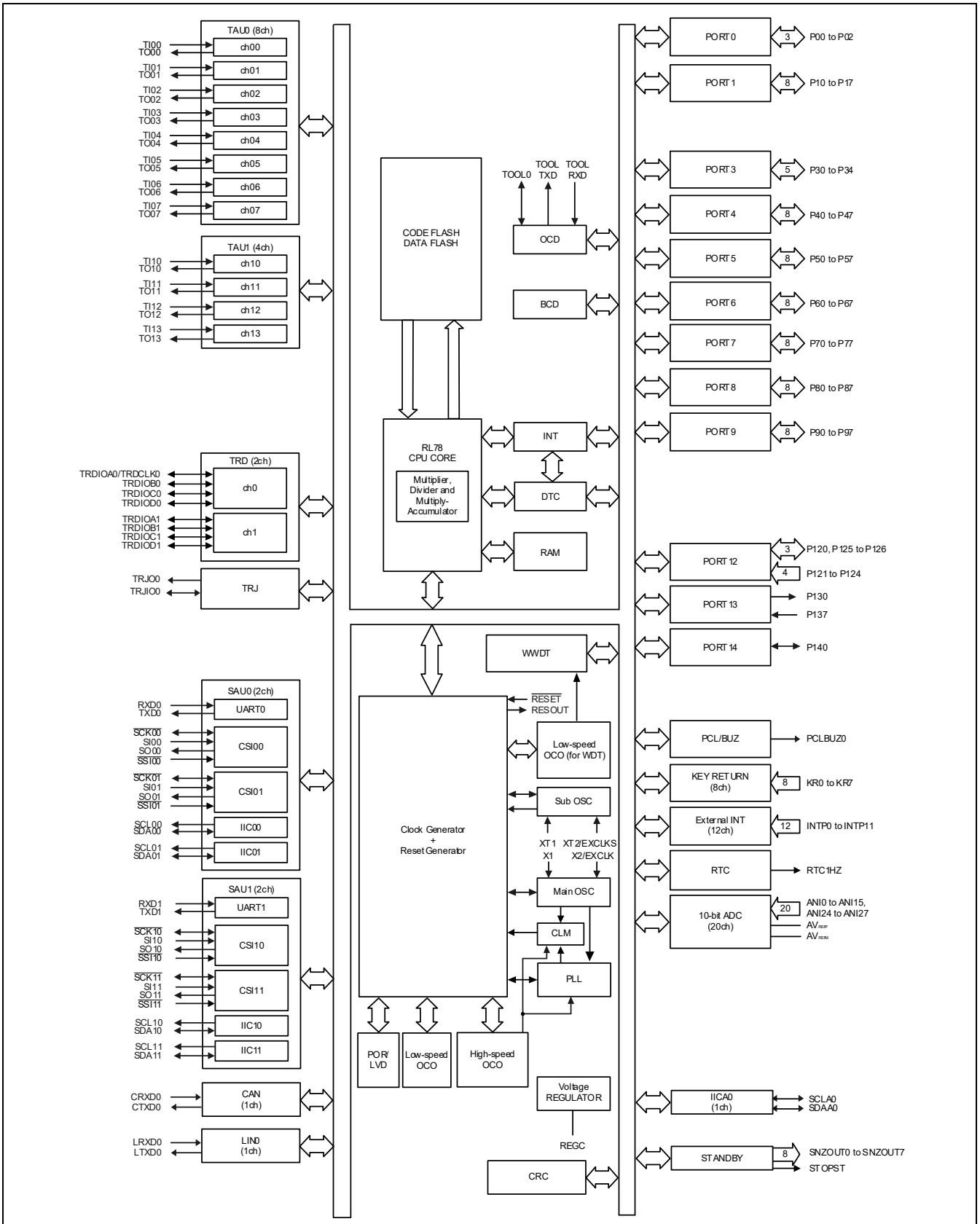

Caution Do not use the XT1 and XT2 pin functions in grade-Y products.

1.4.11 RL78/F13: Block Diagram of R5F10BLn (n = C, D, E, F, G) (CAN and LIN incorporated) 64-pin Products

Figure 1-11. Block Diagram

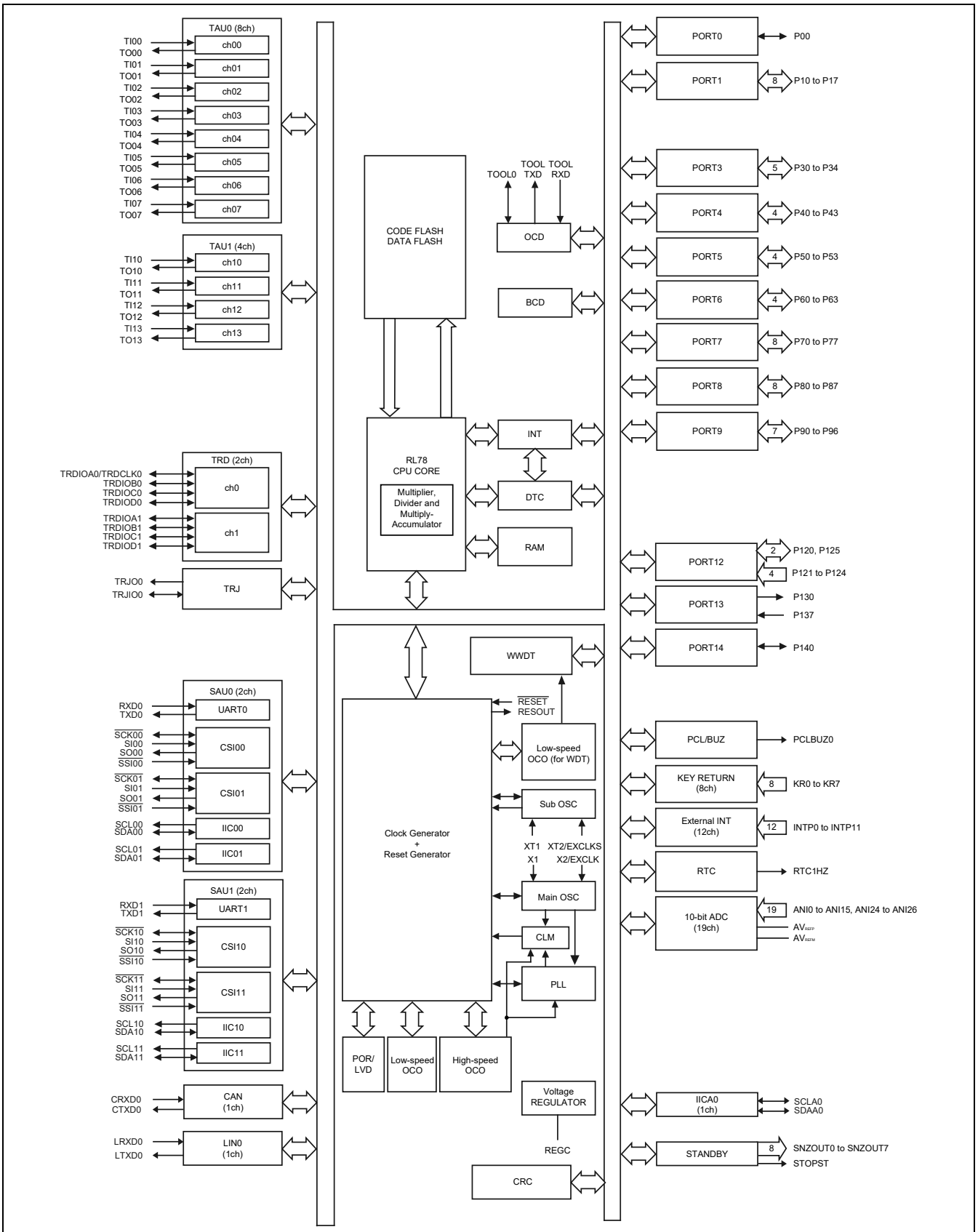

Caution Do not use the XT1 and XT2 pin functions in grade-Y products.

1.4.12 RL78/F13: Block Diagram of R5F10BGn (n = C, D, E, F, G) (CAN and LIN incorporated) 48-pin Products

Figure 1-12. Block Diagram

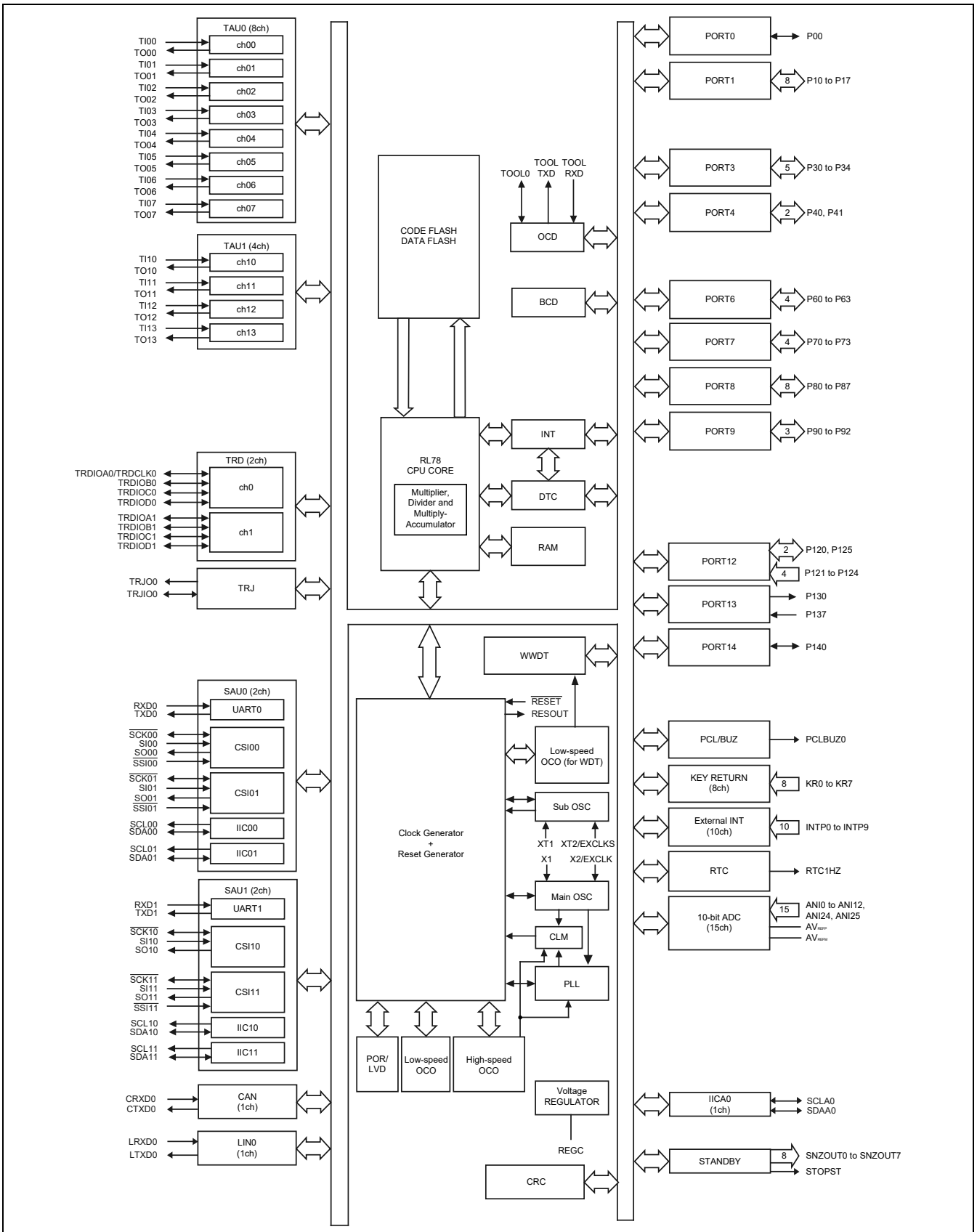

Caution Do not use the XT1 and XT2 pin functions in grade-Y products.

1.4.13 RL78/F13: Block Diagram of R5F10BBn (n = C, D, E, F, G) (CAN and LIN incorporated) 32-pin Products

Figure 1-13. Block Diagram

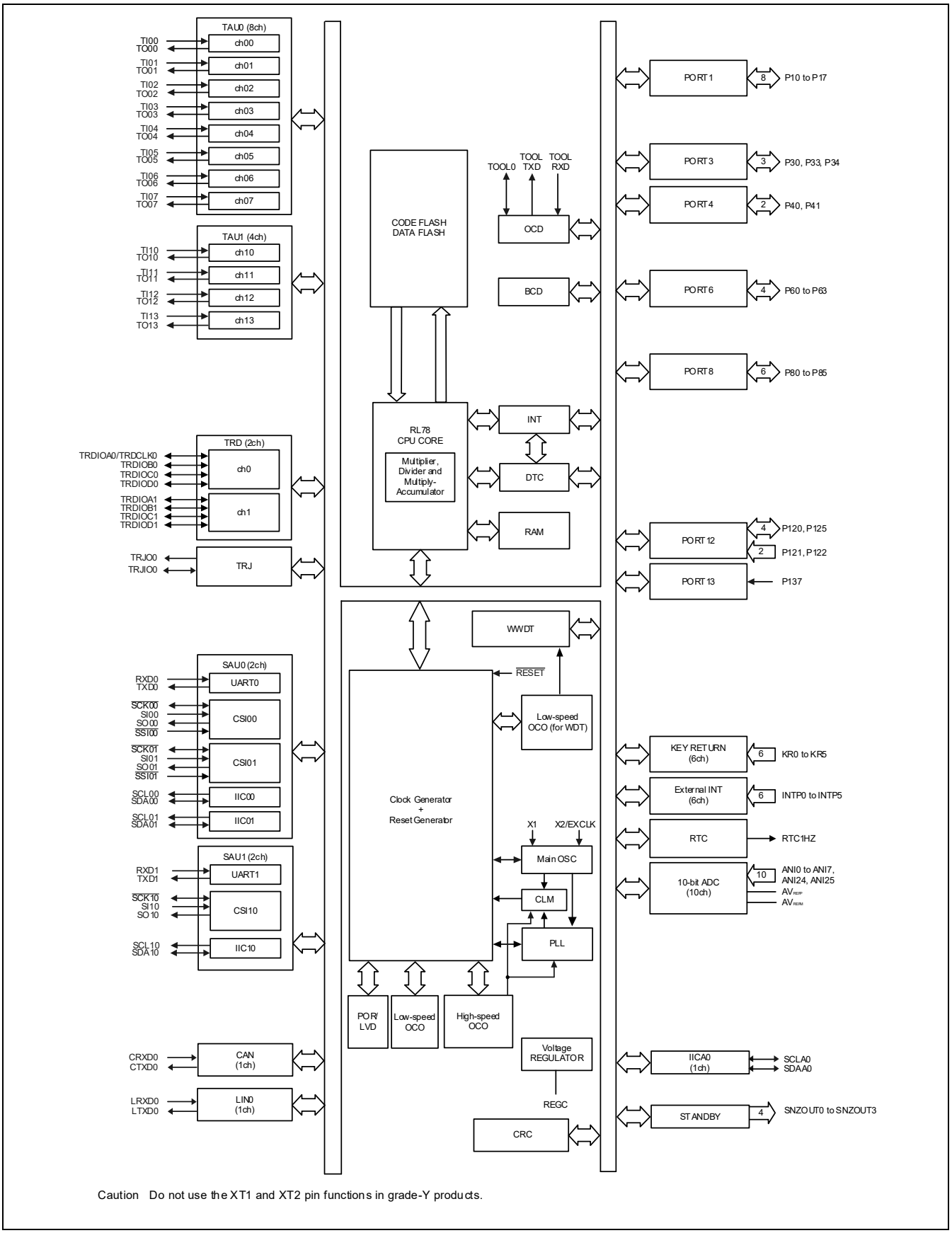

Caution Do not use the XT1 and XT2 pin functions in grade-Y products.

1.4.14 RL78/F13: Block Diagram of R5F10BAn (n = C, D, E, F, G) (CAN and LIN incorporated) 30-pin Products

Figure 1-14. Block Diagram

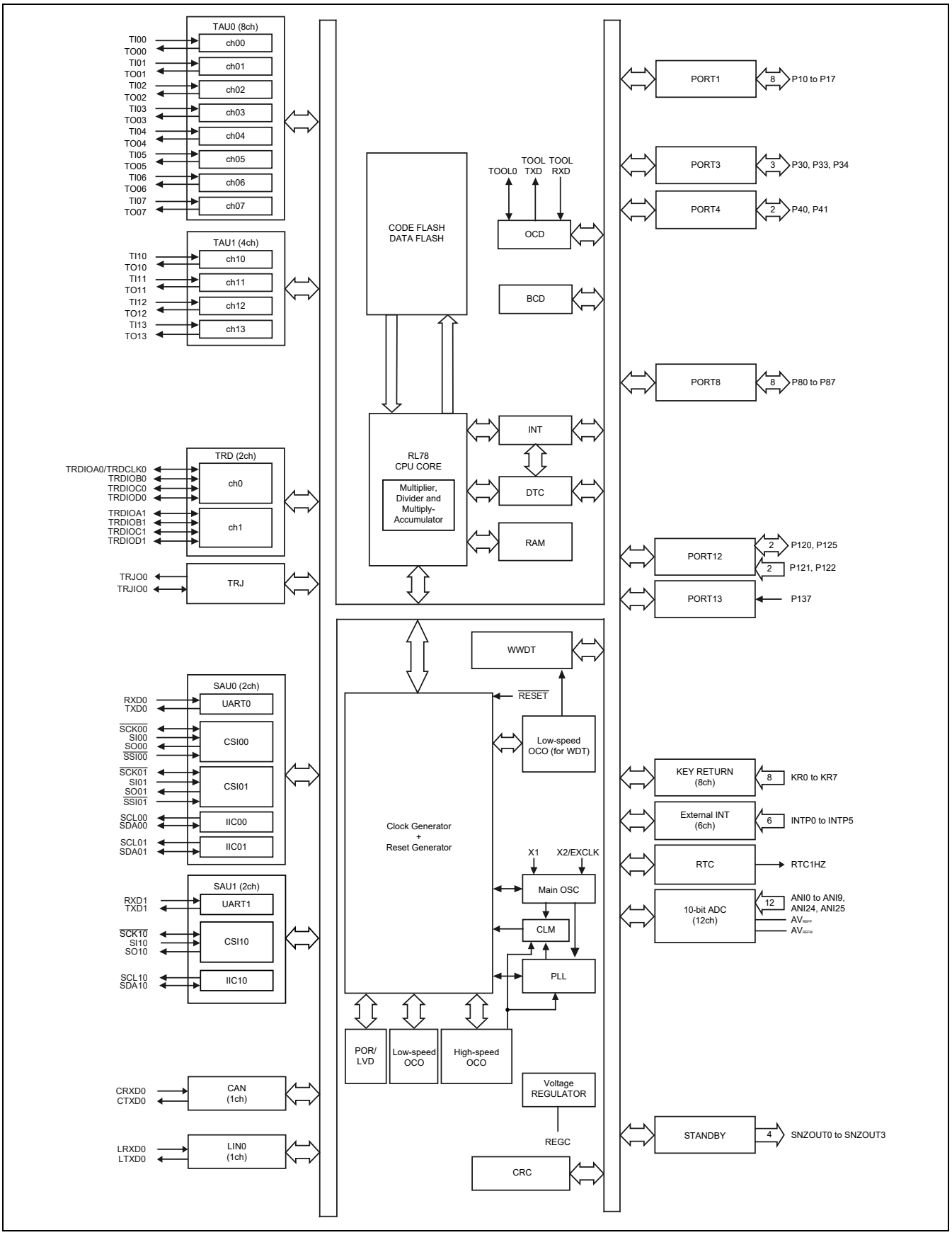

1.4.15 RL78/F13: Block Diagram of R5F10AMn (n = E, F, G) (LIN incorporated) 80-pin Products

Figure 1-15. Block Diagram

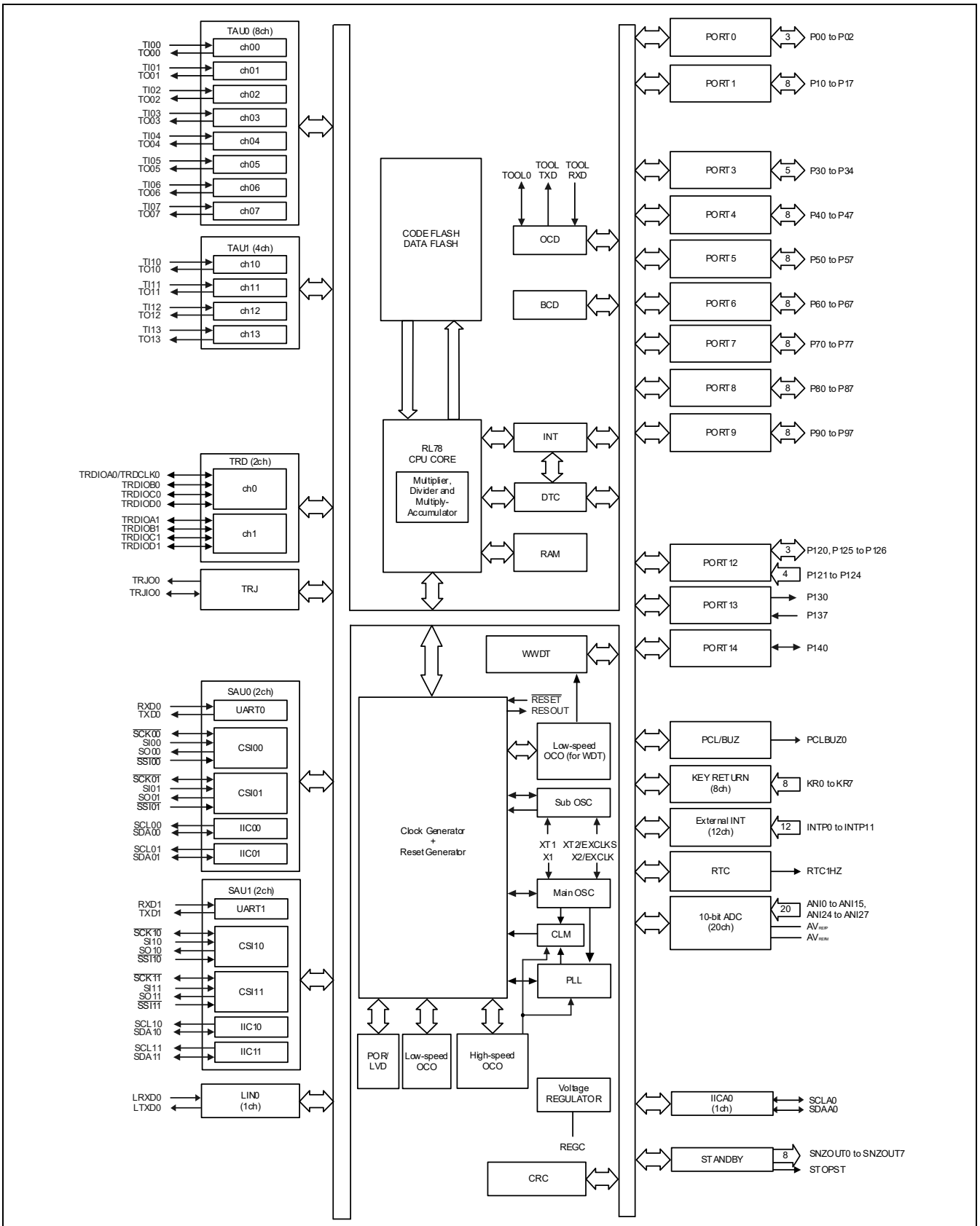

Caution Do not use the XT1 and XT2 pin functions in grade-Y products.

1.4.16 RL78/F13: Block Diagram of R5F10ALn (n = F, G) (LIN incorporated) 64-pin Products

Figure 1-16. Block Diagram

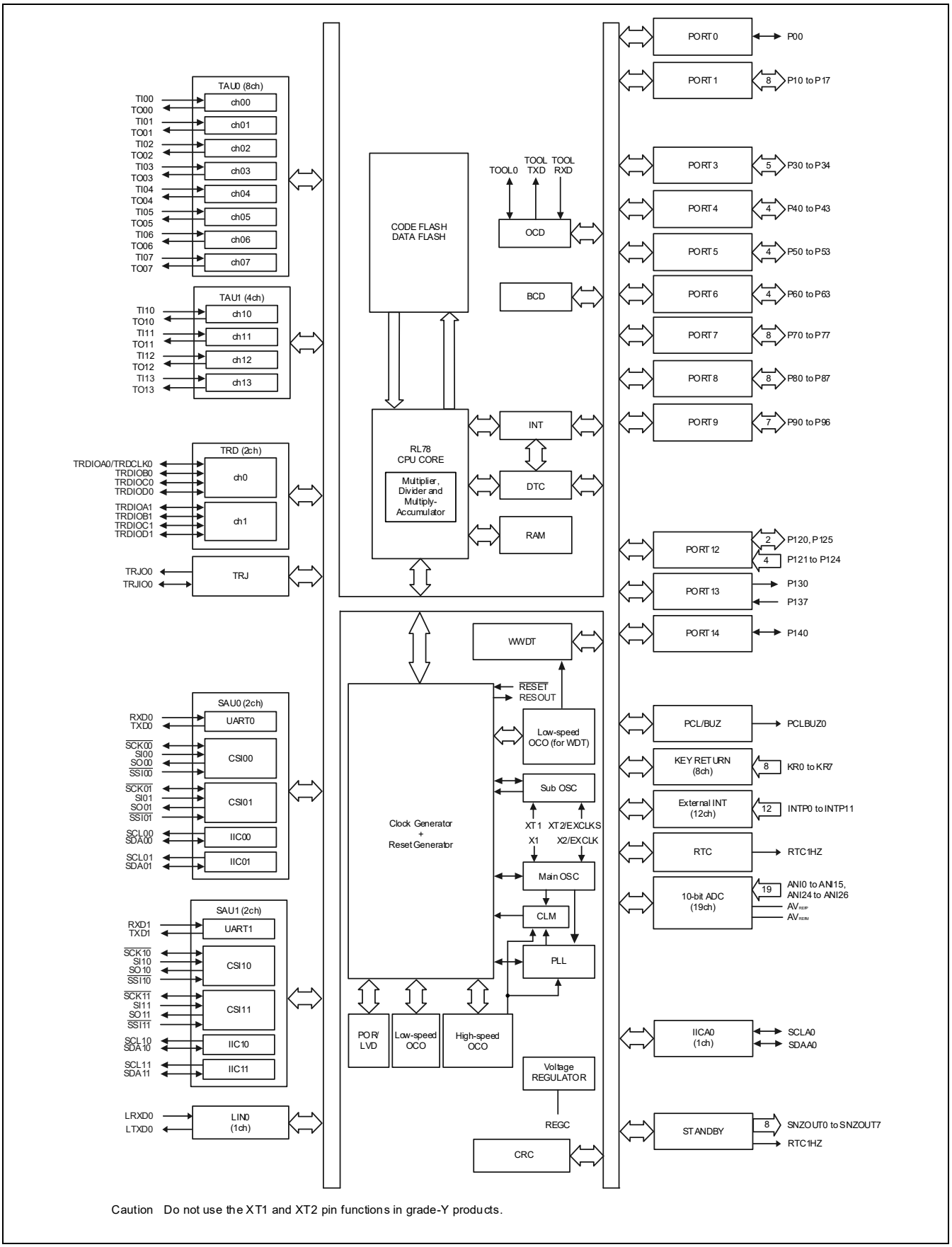

Caution Do not use the XT1 and XT2 pin functions in grade-Y products.

1.4.17 RL78/F13: Block Diagram of R5F10AGn (n = F, G) (LIN incorporated) 48-pin Products

Figure 1-17. Block Diagram

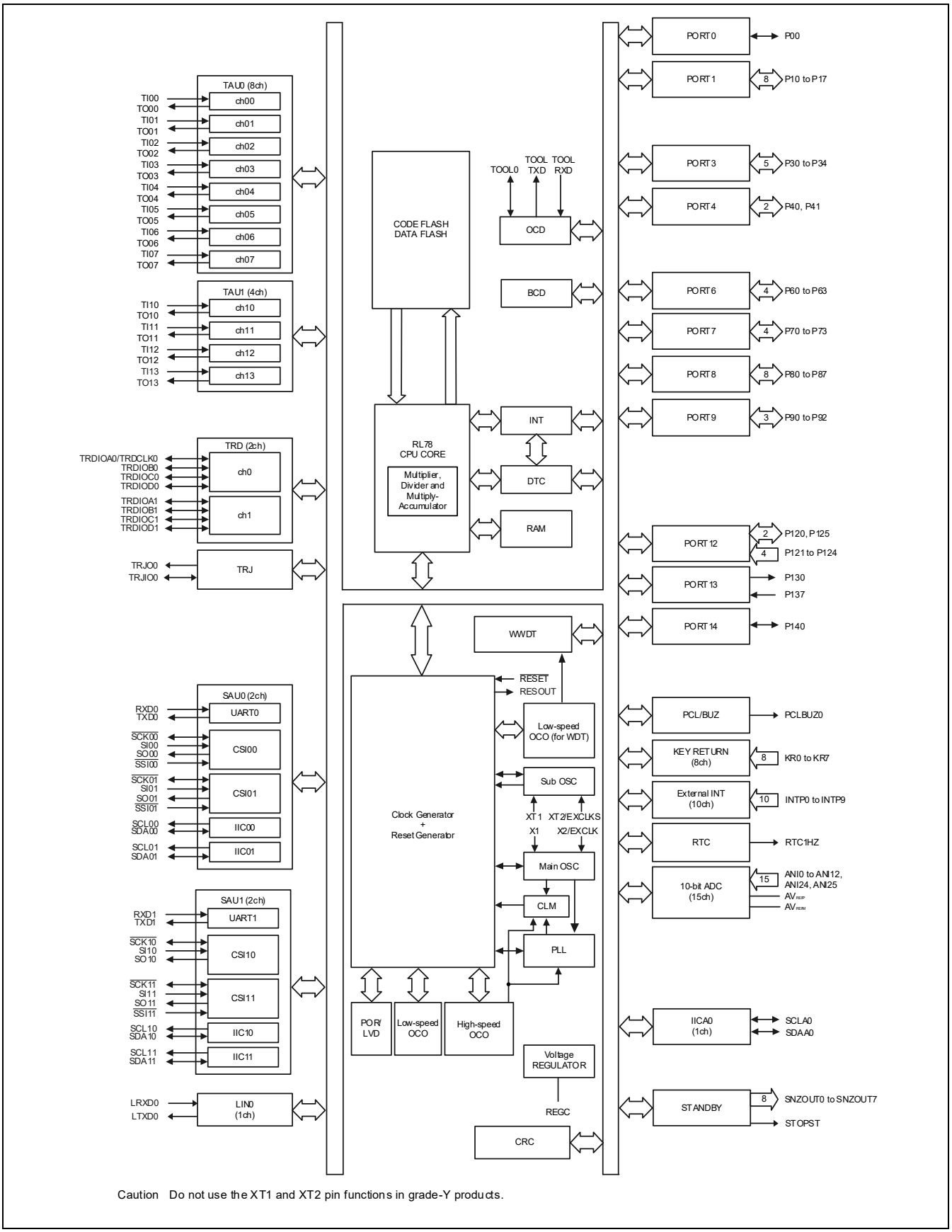

Caution Do not use the XT1 and XT2 pin functions in grade-Y products.

1.4.18 RL78/F13: Block Diagram of R5F10ALn (n = C, D, E) (LIN incorporated) 64-pin Products

Figure 1-18. Block Diagram

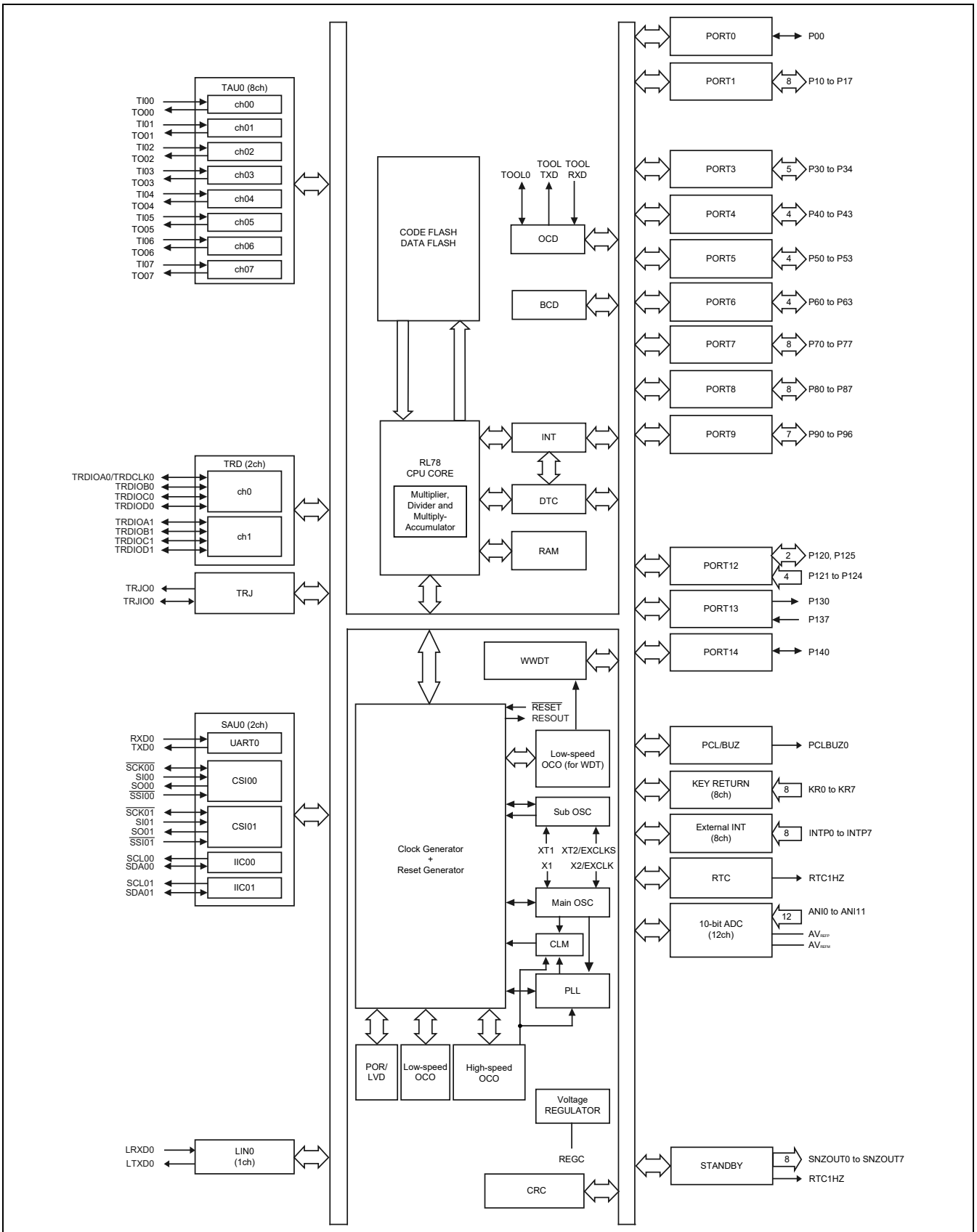

Caution Do not use the XT1 and XT2 pin functions in grade-Y products.

1.4.19 RL78/F13: Block Diagram of R5F10AGn (n = A, C, D, E) (LIN incorporated) 48-pin Products

Figure 1-19. Block Diagram

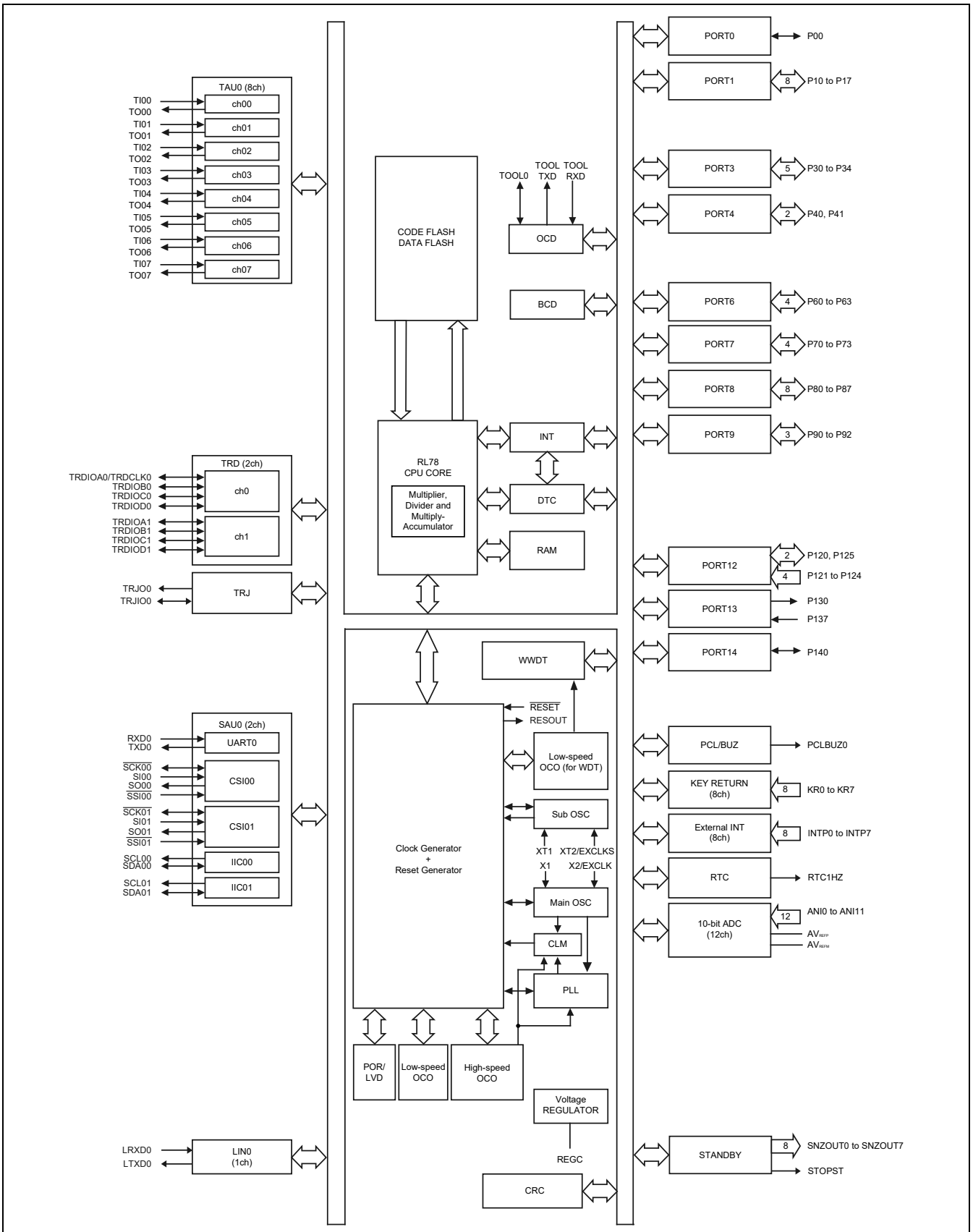

Caution Do not use the XT1 and XT2 pin functions in grade-Y products.

1.4.20 RL78/F13: Block Diagram of R5F10ABn (n = A, C, D, E) (LIN incorporated) 32-pin Products

Figure 1-20. Block Diagram

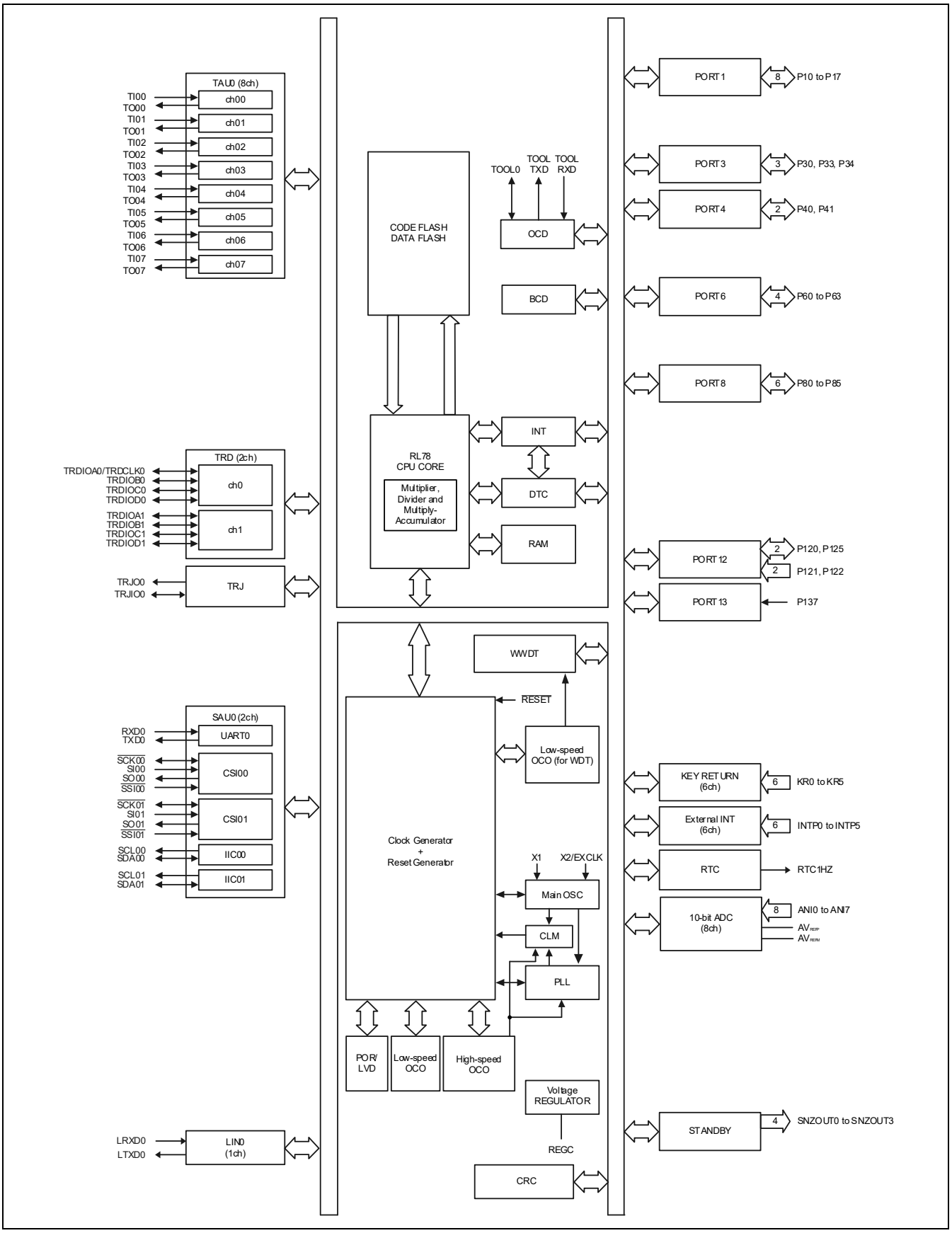

<R>

1.4.21 RL78/F13: Block Diagram of R5F10AAn (n = A, C, D, E) (LIN incorporated) 30-pin Products

Figure 1-21. Block Diagram

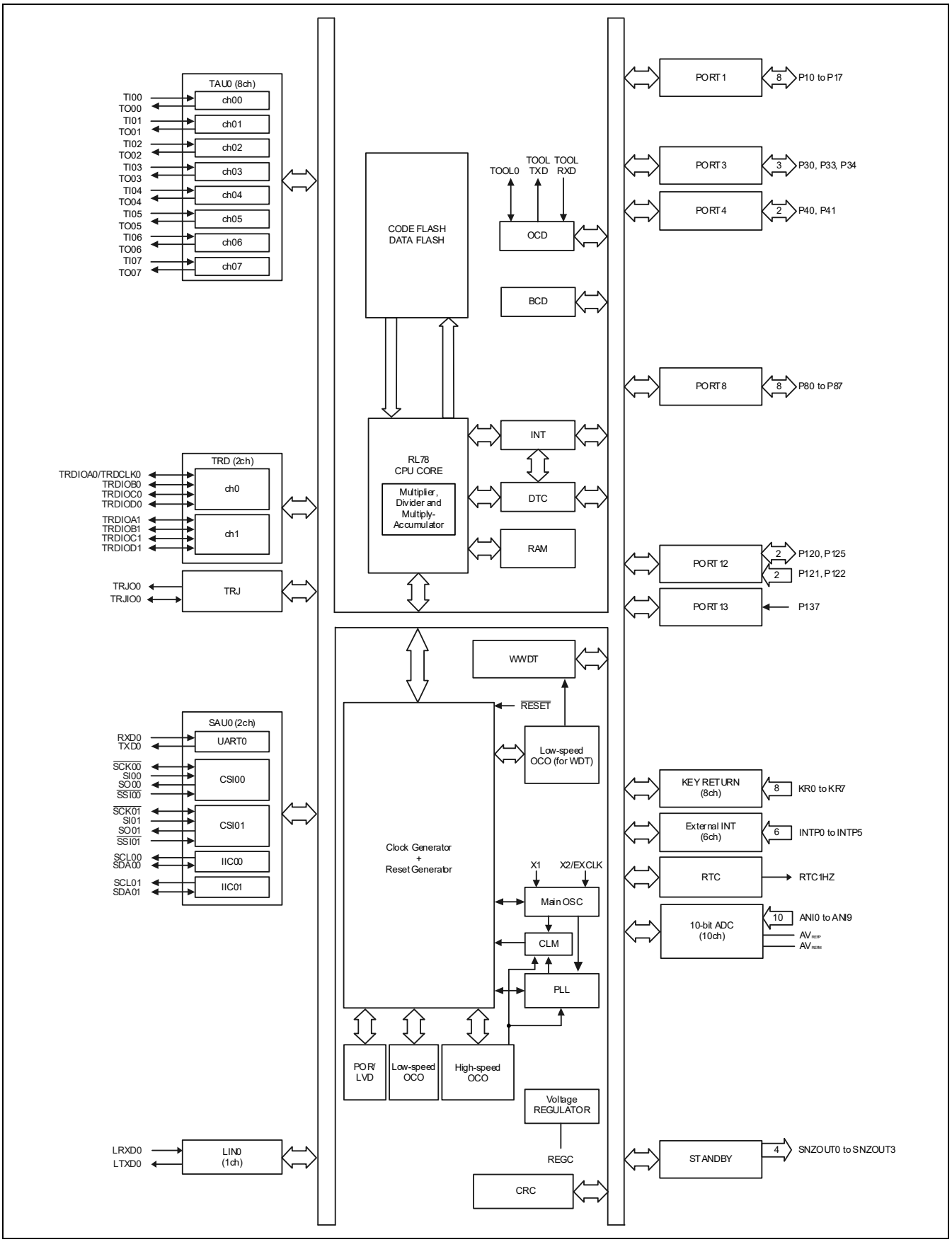

<R>

1.4.22 RL78/F13: Block Diagram of R5F10A6n (n = A, C, D, E) (LIN incorporated) 20-pin Products

Figure 1-22. Block Diagram

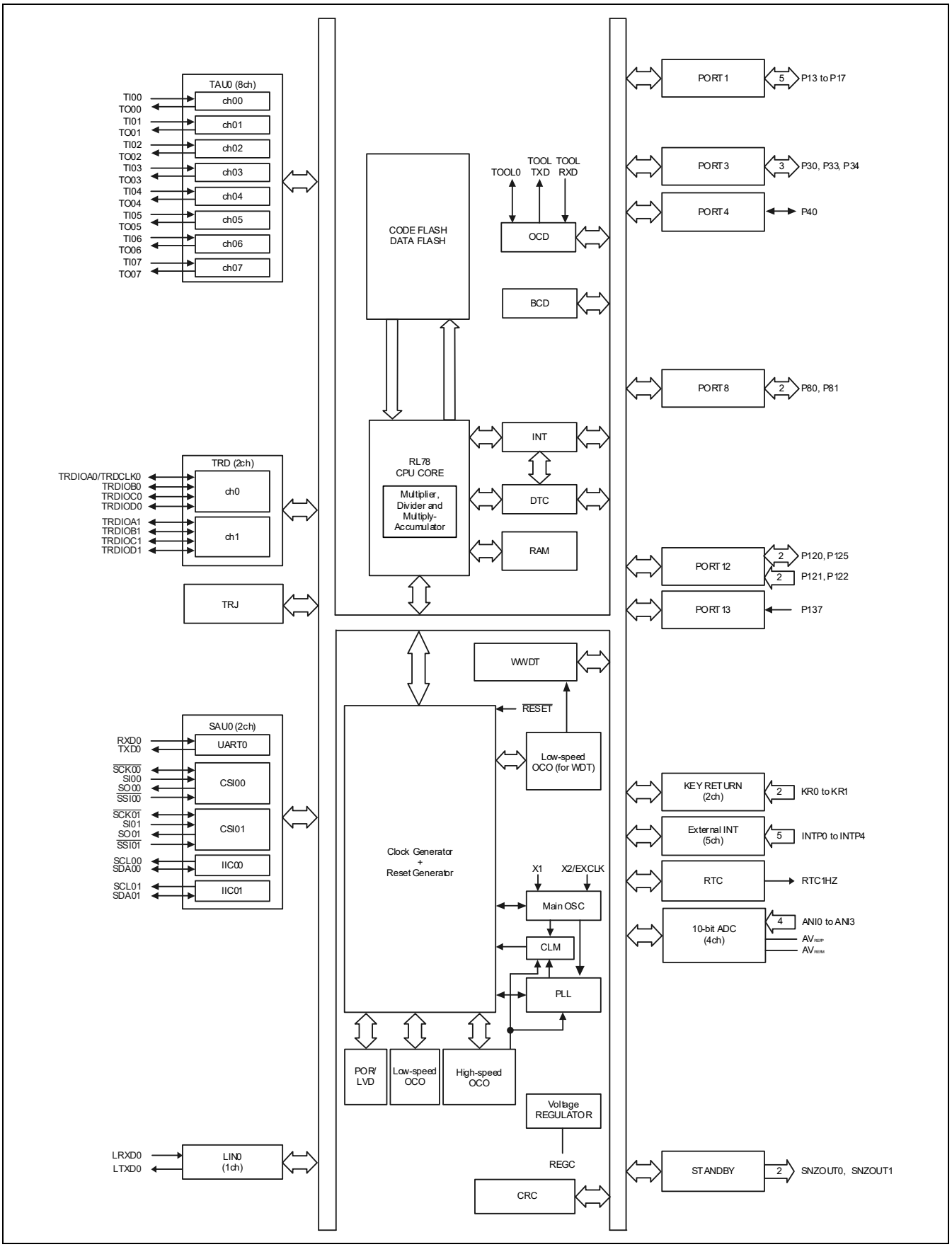

1.5 Pin Configurations

1.5.1 RL78/F14 Pin Configuration for 100-pin Products

- RL78/F14: 100-pin Plastic QFP (Fine Pitch) (14 x 14)

Figure 1-23. RL78/F14 Pin Configuration for 100-pin Products

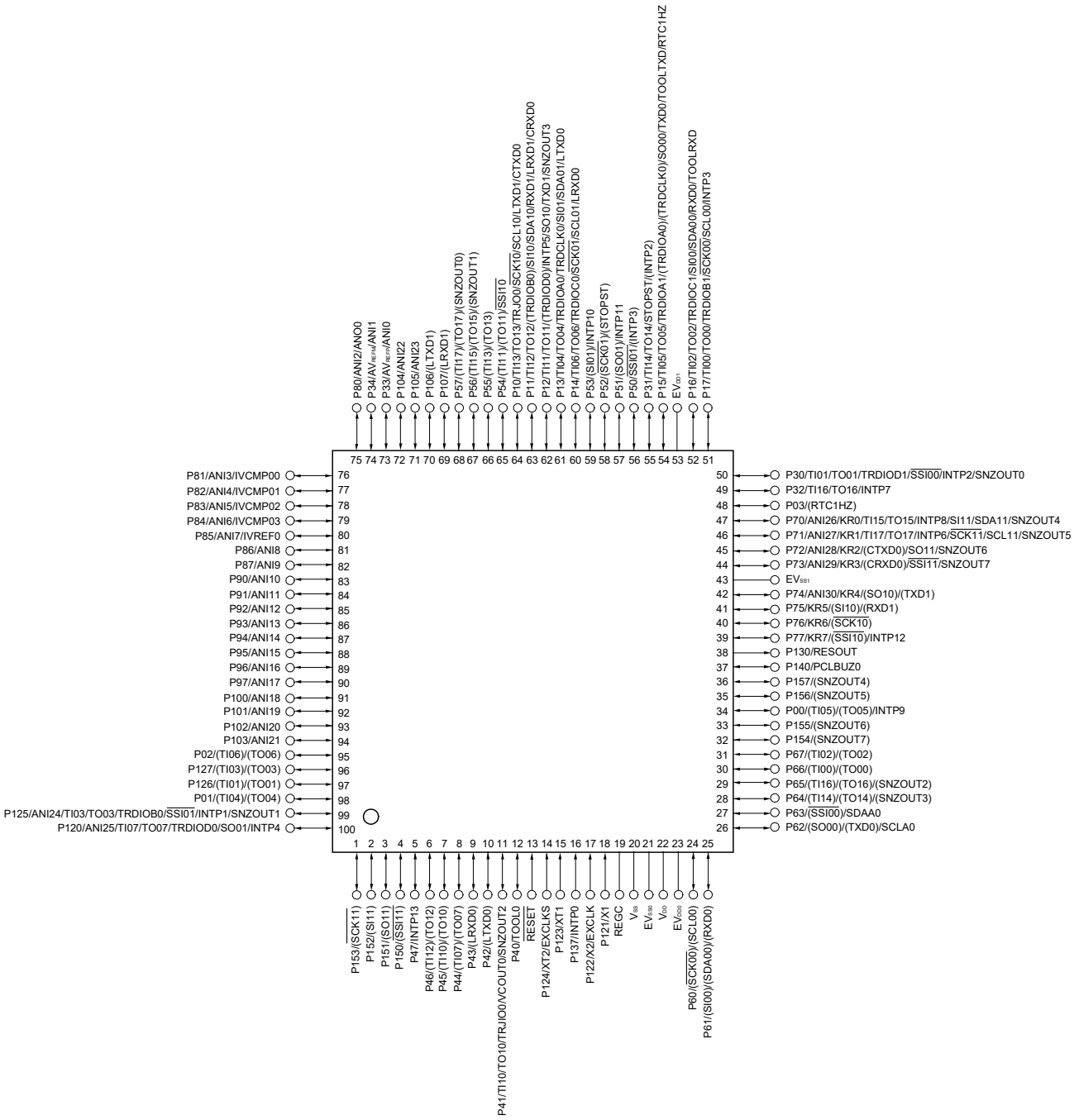

Caution Do not use the XT1 and XT2 pin functions in grade-Y products.

1.5.2 RL78/F14 Pin Configuration for 80-pin Products

- RL78/F14: 80-pin Plastic QFP (Fine Pitch) (12 x 12)

Figure 1-24. RL78/F14 Pin Configuration for 80-pin Products

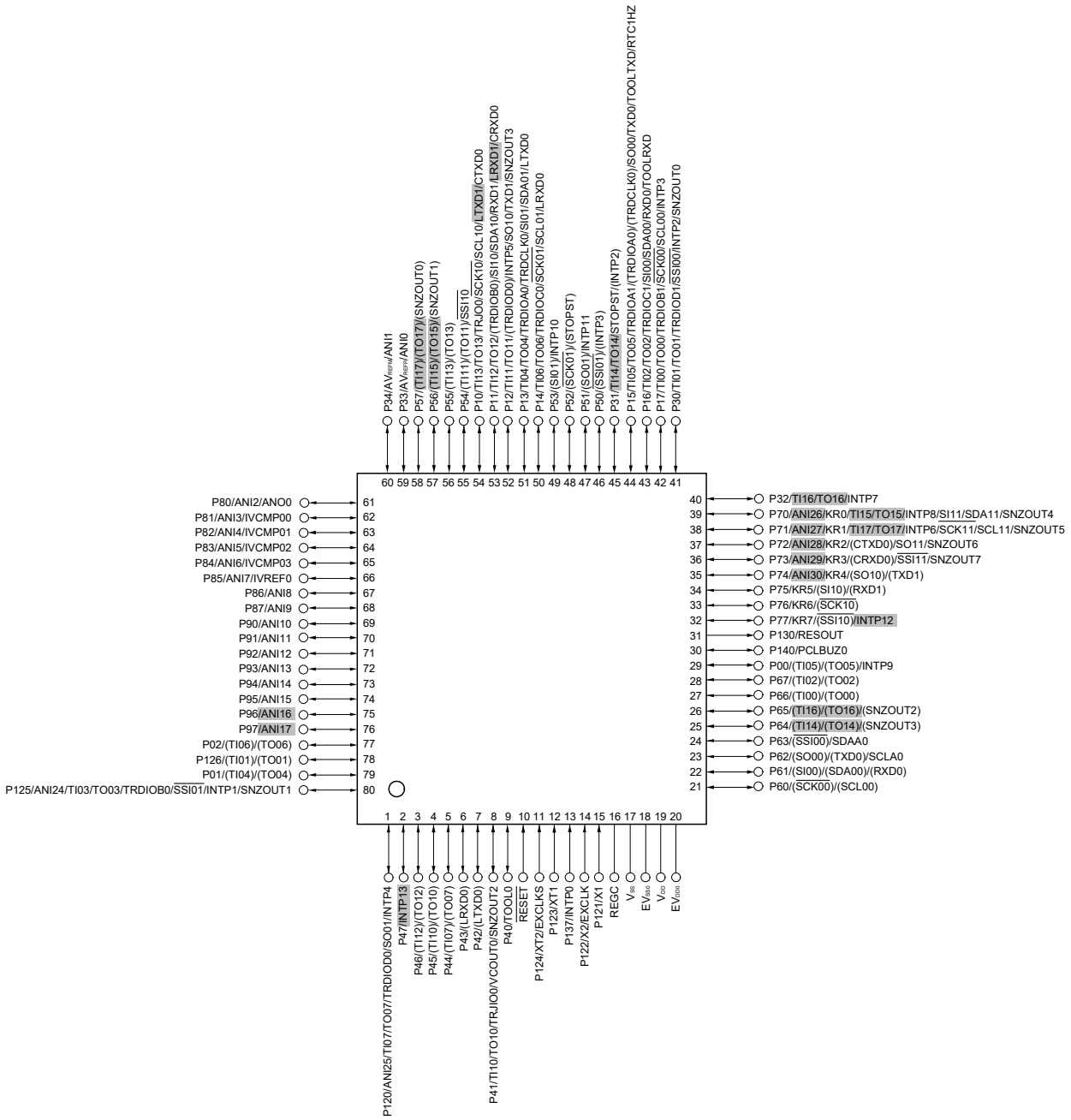

Cautions 1. ▒: Shaded pins are not available in the R5F10PME or R5F10PMF.
Note, however, that the functions of pins 75 and 76, to which ANI16 and ANI17 are assigned, differ depending on the product, as follows:
- R5F10PMG, R5F10PMH, R5F10PMJ: P96/ANI16 (pin 75)
  P97/ANI17 (pin 76)
- R5F10PME, R5F10PMF: P96/ANI26 (pin 75)
  P97/ANI27 (pin 76)

2. The available pins and functions differ depending on the product. Refer to **CHAPTER 2 PIN FUNCTIONS** for details.
3. Do not use the XT1 and XT2 pin functions in grade-Y products.

1.5.3 RL78/F13 Pin Configuration for 80-pin Products

- RL78/F13: 80-pin Plastic QFP (Fine Pitch) (12 x 12)

Figure 1-25. RL78/F13 Pin Configuration for 80-pin Products

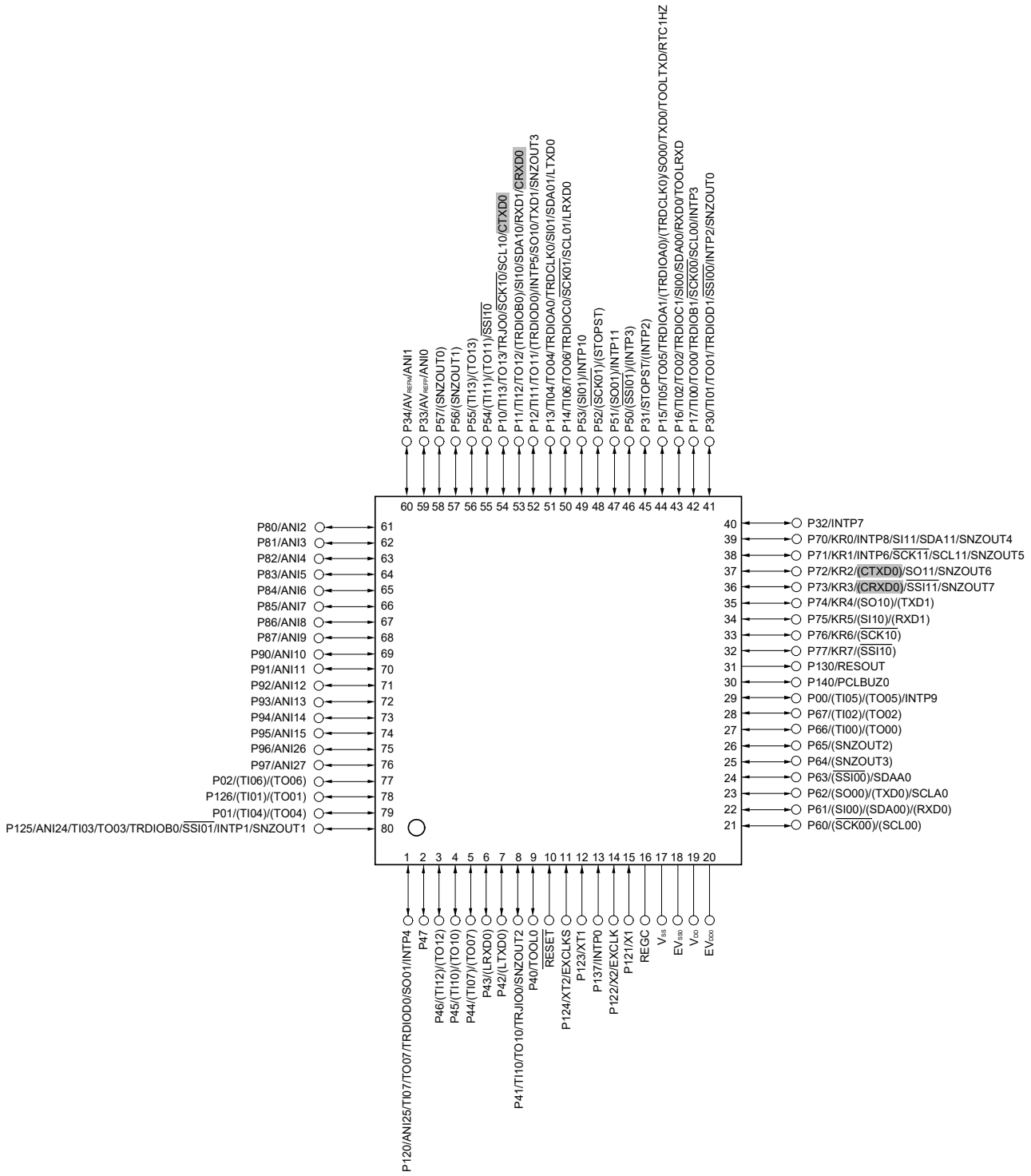

Cautions 1. ▒: Shaded pins are not available in the RL78/F13 (LIN incorporated) products (R5F10AME, R5F10AMF, R5F10AMG).
2. The available pins and functions differ depending on the product. Refer to **CHAPTER 2 PIN FUNCTIONS** for details.
3. Do not use the XT1 and XT2 pin functions in grade-Y products.

1.5.4 RL78/F14 Pin Configuration for 64-pin Products

- RL78/F14: 64-pin Plastic QFP (Fine Pitch) (10 x 10)

Figure 1-26. RL78/F14 Pin Configuration for 64-pin Products

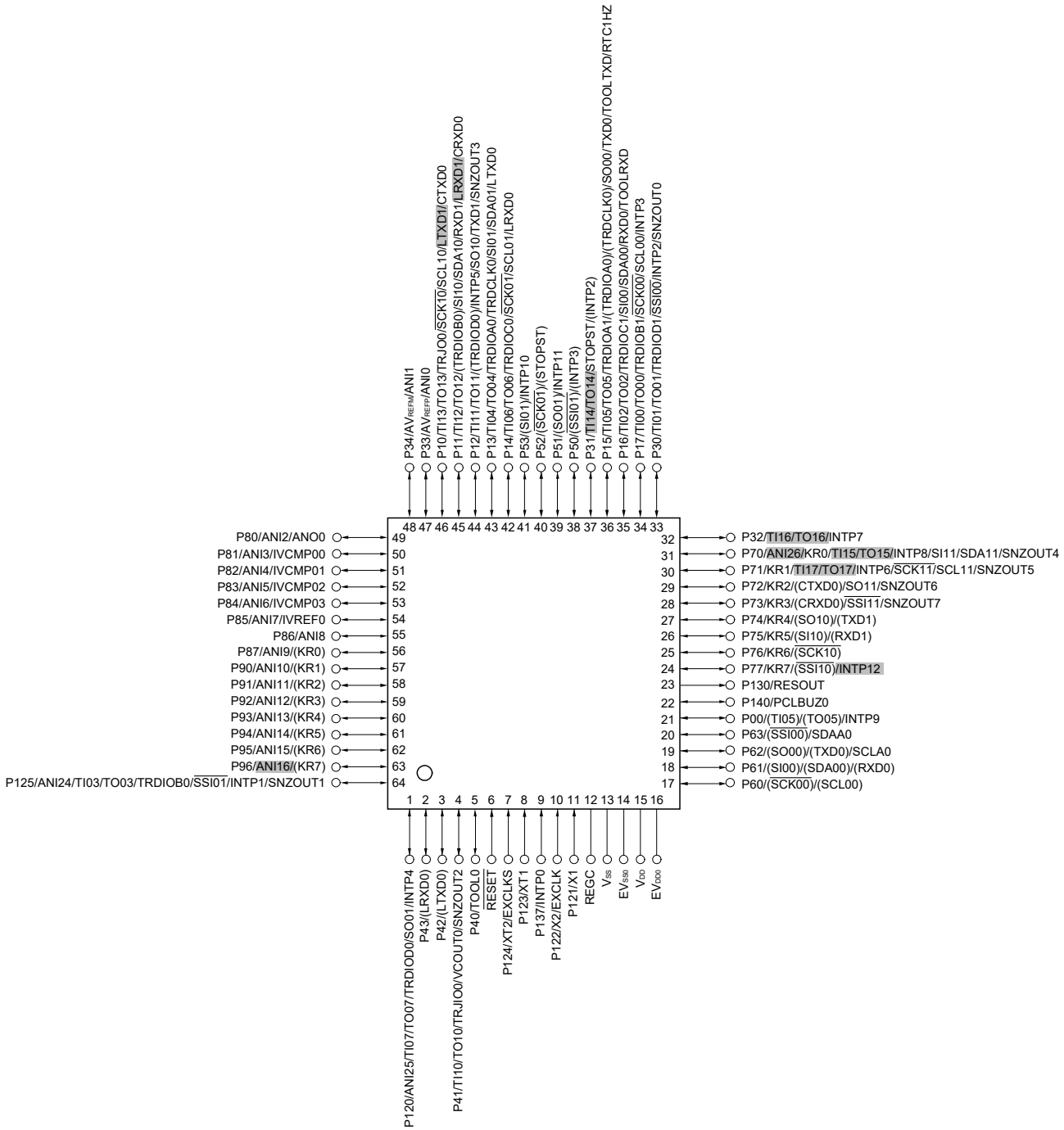

Cautions 1. : Shaded pins are not available in the R5F10PLE or R5F10PLF.
Note, however, that the functions of pin 63 to which ANI16 is assigned, differ depending on the product, as follows:
• R5F10PLG, R5F10PLH, R5F10PLJ: P96/ANI16/(KR7)
• R5F10PLE, R5F10PLF: P96/ANI26/(KR7)
2. The available pins and functions differ depending on the product. Refer to **CHAPTER 2 PIN FUNCTIONS** for details.
3. Do not use the XT1 and XT2 pin functions in grade-Y products.

1.5.5 RL78/F13 Pin Configuration for 64-pin Product

- RL78/F13: 64-pin Plastic QFP (Fine Pitch) (10 x 10)

Figure 1-27. RL78/F13 Pin Configuration for 64-pin Products

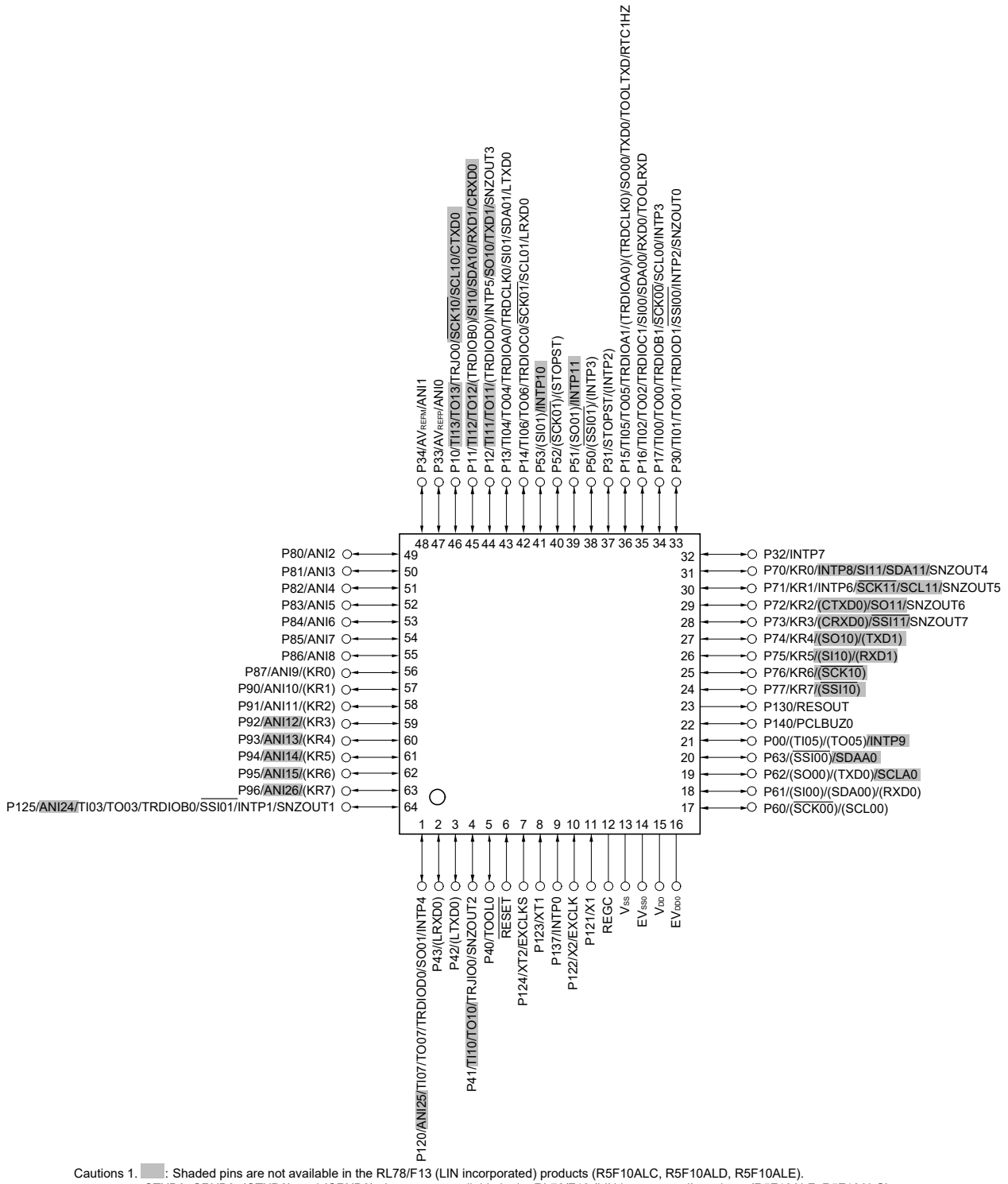

Cautions 1. ▒: Shaded pins are not available in the RL78/F13 (LIN incorporated) products (R5F10ALC, R5F10ALD, R5F10ALE).
CTXD0, CRXD0, (CTXD0), and (CRXD0) pins are not available in the RL78/F13 (LIN incorporated) products (R5F10ALF, R5F10ALG).
2. The available pins and functions differ depending on the product. Refer to **CHAPTER 2 PIN FUNCTIONS** for details.
3. Do not use the XT1 and XT2 pin functions in grade-Y products.

1.5.6 RL78/F14 Pin Configuration for 48-pin Products

- RL78/F14: 48-pin Plastic QFP and QFN

Figure 1-28. RL78/F14 Pin Configuration for 48-pin Products

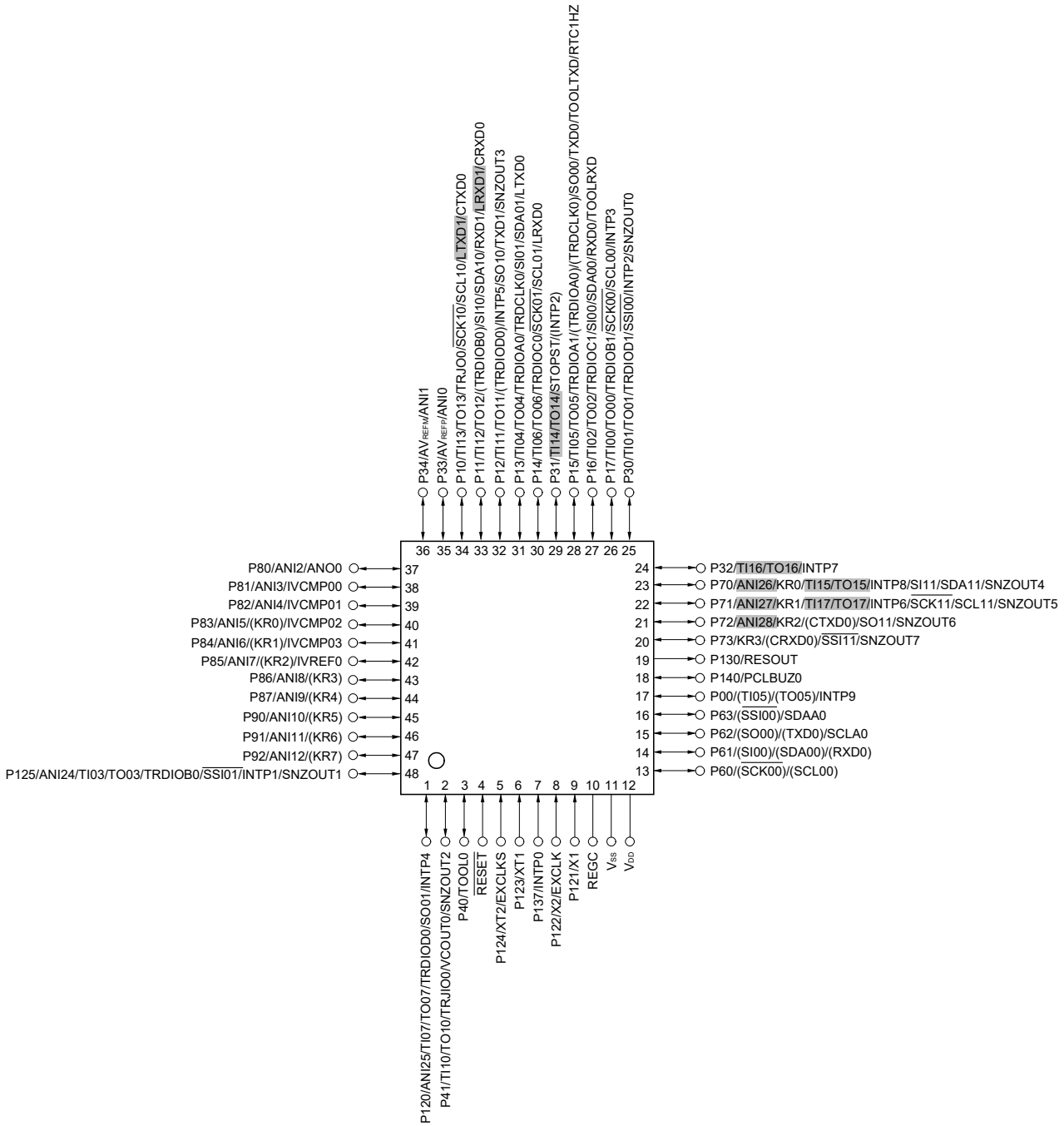

Cautions 1. ▒: Shaded pins are not available in the R5F10PGD, R5F10PGE, or R5F10PGF.
2. The available pins and functions differ depending on the product. Refer to **CHAPTER 2 PIN FUNCTIONS** for details.
3. Do not use the XT1 and XT2 pin functions in grade-Y products.

1.5.7 RL78/F13 Pin Configuration for 48-pin Products

- RL78/F13: 48-pin Plastic QFP and QFN

Figure 1-29. RL78/F13 Pin Configuration for 48-pin Products

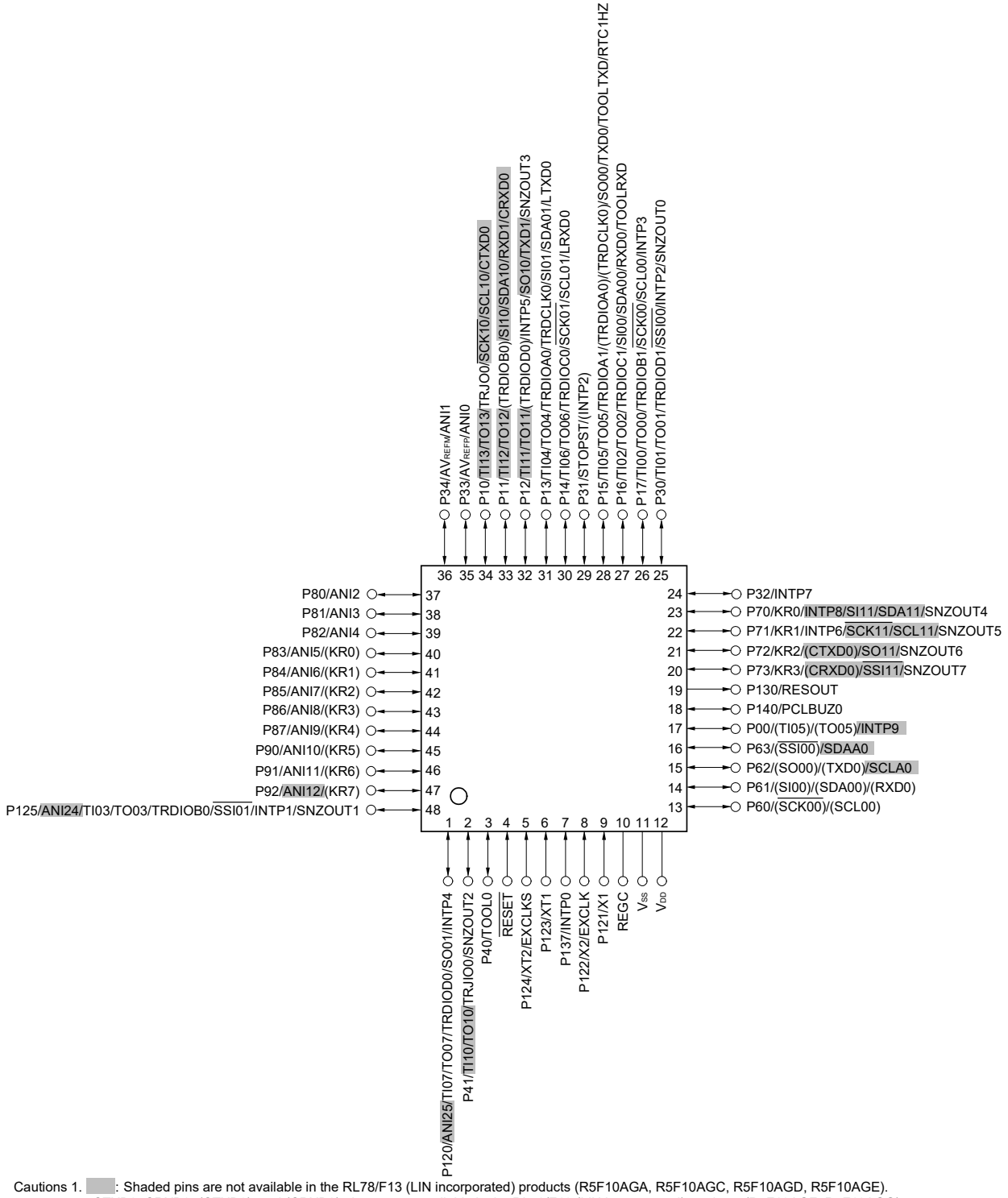

Cautions 1. ▒: Shaded pins are not available in the RL78/F13 (LIN incorporated) products (R5F10AGA, R5F10AGC, R5F10AGD, R5F10AGE).
CTXD0, CRXD0, (CTXD0), and (CRXD0) pins are not available in the RL78/F13 (LIN incorporated) products (R5F10AGF, R5F10AGG).
2. The available pins and functions differ depending on the product. Refer to **CHAPTER 2 PIN FUNCTIONS** for details.
3. Do not use the XT1 and XT2 pin functions in grade-Y products.

1.5.8 RL78/F14 Pin Configuration for 32-pin Products

- RL78/F14: 32-pin Plastic QFN

Figure 1-30. RL78/F14 Pin Configuration for 32-pin Product

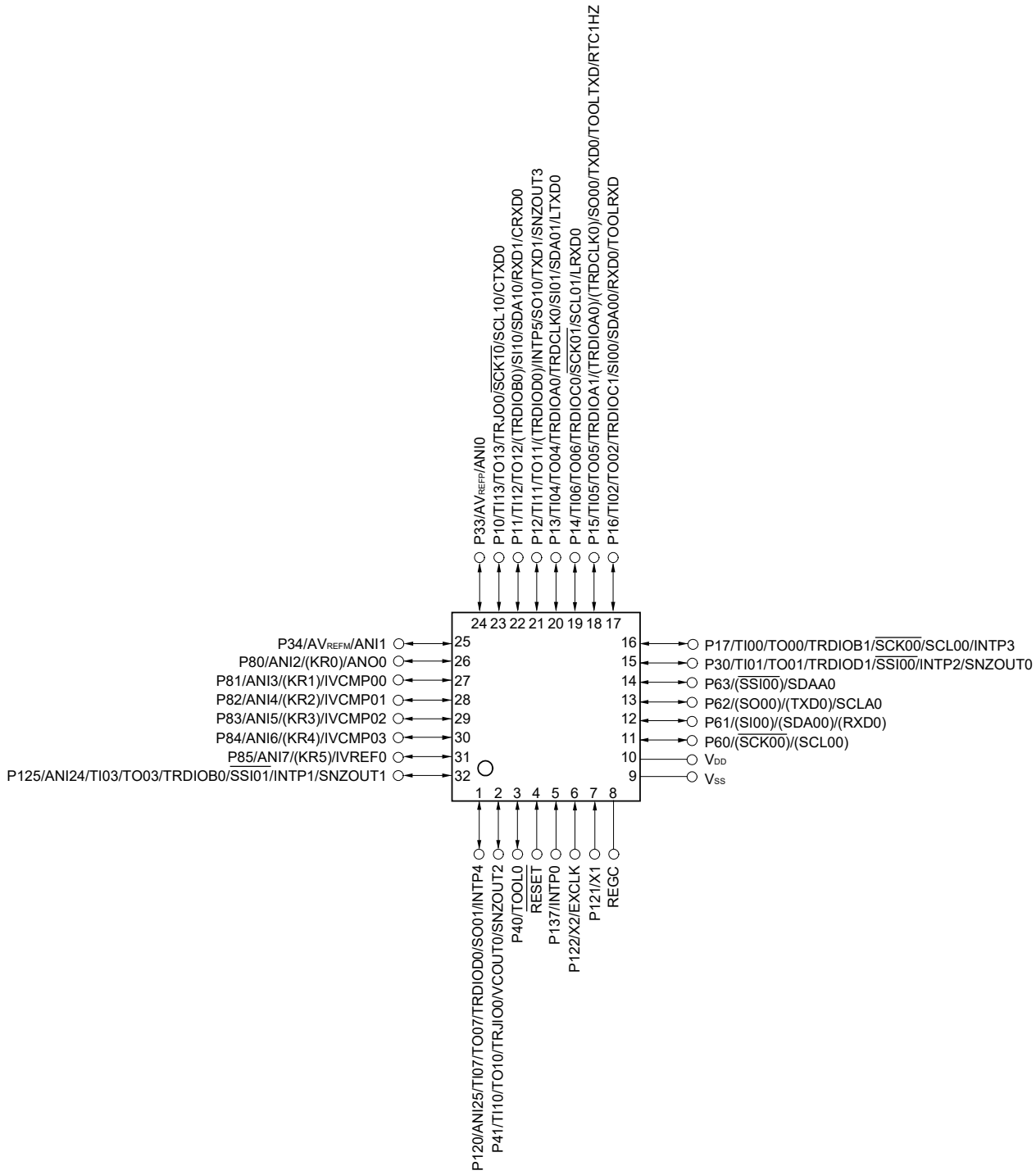

Caution Do not use the XT1 and XT2 pin functions in grade-Y products.

1.5.9 RL78/F13 Pin Configuration for 32-pin Products

- RL78/F13: 32-pin Plastic QFN

Figure 1-31. RL78/F13 Pin Configuration for 32-pin Products

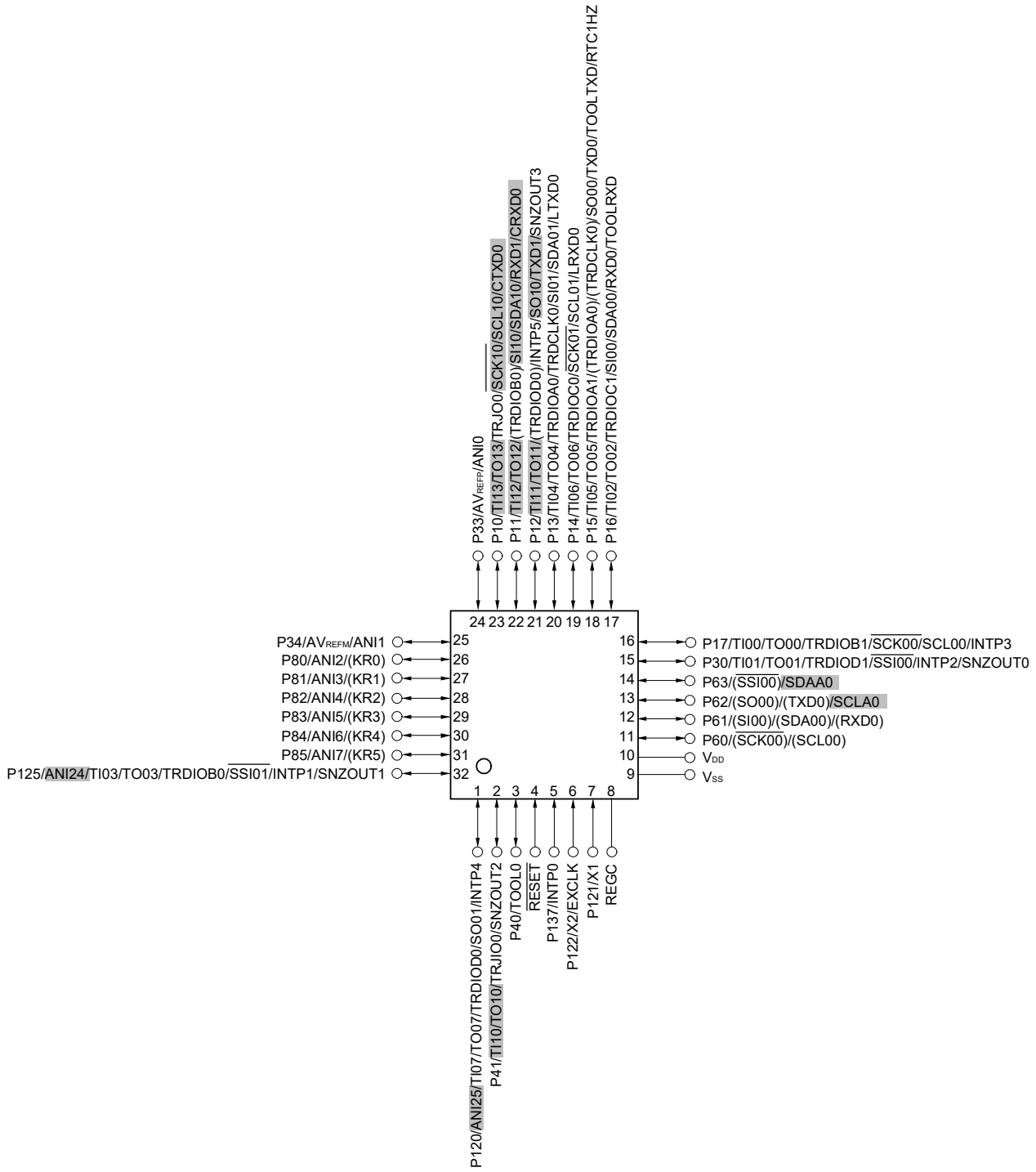

Cautions 1. ▒ : Shaded pins are not available in the RL78/F13 (LIN incorporated) products (R5F10ABA, R5F10ABC, R5F10ABD, R5F10ABE).
2. The available pins and functions differ depending on the product. Refer to **CHAPTER 2 PIN FUNCTIONS** for details.
3. Do not use the XT1 and XT2 pin functions in grade-Y products.

1.5.10 RL78/F14 Pin Configuration for 30-pin Products

- RL78/F14: 30-pin Plastic SSOP

Figure 1-32. RL78/F14 Pin Configuration for 30-pin Products

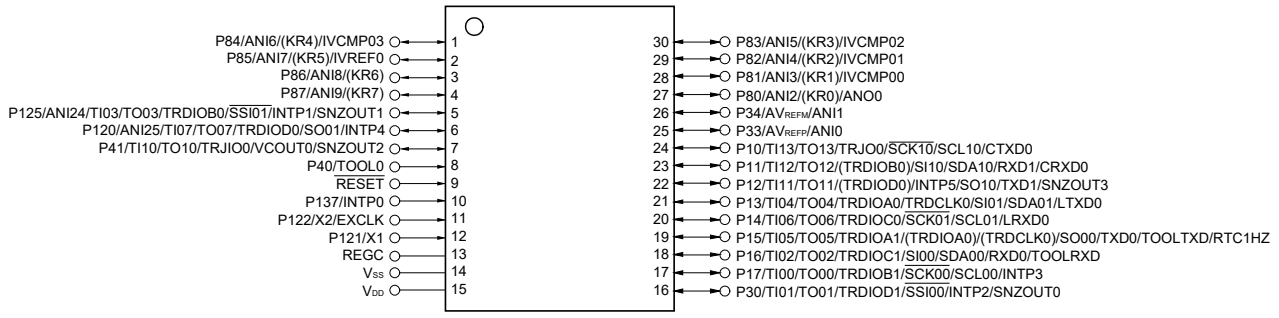

Caution Do not use the XT1 and XT2 pin functions in grade-Y products.

1.5.11 RL78/F13 Pin Configuration for 30-pin Products

- RL78/F13: 30-pin Plastic SSOP

Figure 1-33. RL78/F13 Pin Configuration for 30-pin Products

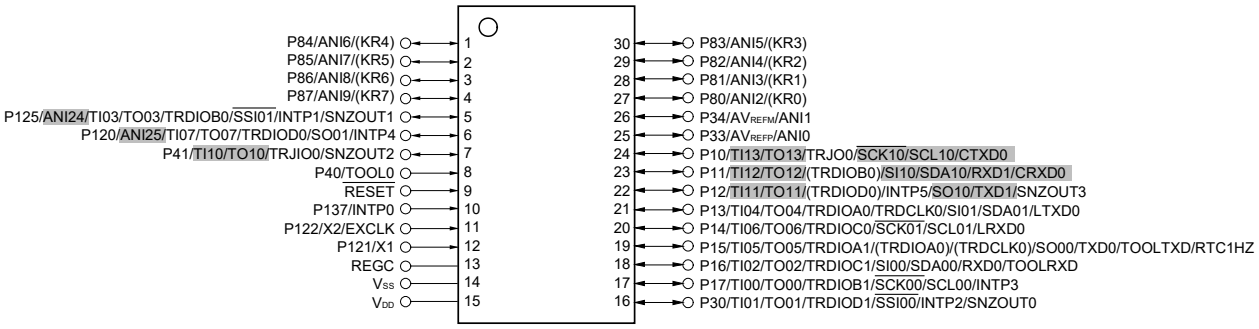

Cautions 1. : Shaded pins are not available in the RL78/F13 (LIN incorporated) products (R5F10AAA, R5F10AAC, R5F10AAD, R5F10AAE).
2. The available pins and functions differ depending on the product. Refer to **CHAPTER 2 PIN FUNCTIONS** for details.
3. Do not use the XT1 and XT2 pin functions in grade-Y products.

1.5.12 RL78/F13 Pin Configuration for 20-pin Products

- RL78/F13: 20-pin Plastic SSOP

Figure 1-34. RL78/F13 Pin Configuration for 20-pin Products

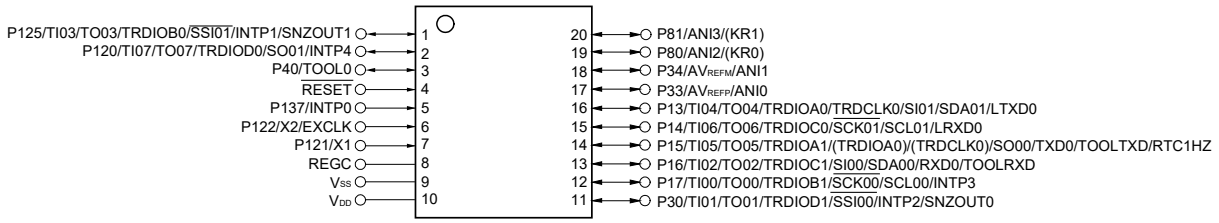

Caution Do not use the XT1 and XT2 pin functions in grade-Y products.

1.6 Order Information

Tables 1-7 to 1-9 show the order information for RL78/F14, RL78/F13 (CAN and LIN incorporated), and RL78/F13 (LIN incorporated).

<R>

Table 1-7. Order Information for RL78/F14

Package	Device	Order Name
30-pin plastic SSOP	Grade L	R5F10PADLSP, R5F10PAELSP
	Grade K	R5F10PADKSP, R5F10PAEKSP
	Grade Y	R5F10PADYSP, R5F10PAEYSP
32-pin plastic VQFN	Grade L	R5F10PBDLNA, R5F10PBELNA
	Grade K	R5F10PBDKNA, R5F10PBEKNA
	Grade Y	R5F10PBDYNA, R5F10PBEYNA
48-pin plastic LQFP	Grade L	R5F10PGDCLFB, R5F10PGECLFB, R5F10PGFCLFB, R5F10PGGCLFB, R5F10PGHCLFB, R5F10PGJCLFB
	Grade K	R5F10PGDCKFB, R5F10PGECKFB, R5F10PGFCKFB, R5F10PGGCKFB, R5F10PGHCKFB, R5F10PGJCKFB
	Grade Y	R5F10PGDYFB, R5F10PGEYFB, R5F10PGFYFB, R5F10PGGYFB, R5F10PGHYFB, R5F10PGJYFB
48-pin plastic VQFN	Grade L	R5F10PGDLNA, R5F10PGELNA, R5F10PGFLNA, R5F10PGGLNA, R5F10PGHLNA, R5F10PGJLNA
	Grade K	R5F10PGDKNA, R5F10PGEKNA, R5F10PGFKNA, R5F10PGGKNA, R5F10PGHKNA, R5F10PGJKNA
	Grade Y	R5F10PGDYNA, R5F10PGEYNA, R5F10PGFYNA, R5F10PGGYNA, R5F10PGHYNA, R5F10PGJYNA
64-pin plastic LQFP	Grade L	R5F10PLECLFB, R5F10PLFCLFB, R5F10PLGCLFB, R5F10PLHCLFB, R5F10PLJCLFB
	Grade K	R5F10PLECKFB, R5F10PLFCKFB, R5F10PLGCKFB, R5F10PLHCKFB, R5F10PLJCKFB
	Grade Y	R5F10PLEYFB, R5F10PLFYFB, R5F10PLGYFB, R5F10PLHYFB, R5F10PLJYFB
80-pin plastic LQFP	Grade L	R5F10PMECLFB, R5F10PMFCLFB, R5F10PMGCLFB, R5F10PMHCLFB, R5F10PMJCLFB
	Grade K	R5F10PMECKFB, R5F10PMFCKFB, R5F10PMGCKFB, R5F10PMHCKFB, R5F10PMJCKFB
	Grade Y	R5F10PMEYFB, R5F10PMFYFB, R5F10PMGYFB, R5F10PMHYFB,

		R5F10PMJYFB
100-pin plastic LQFP	Grade L	R5F10PPECLFB, R5F10PPFCLFB, R5F10PPGCLFB, R5F10PPHCLFB, R5F10PPJCLFB
	Grade K	R5F10PPECKFB, R5F10PPFCKFB, R5F10PPGCKFB, R5F10PPHCKFB, R5F10PPJCKFB
	Grade Y	R5F10PPEYFB, R5F10PPFYFB, R5F10PPGYFB, R5F10PPHYFB, R5F10PPJYFB

Table 1-8. Order Information for RL78/F13 (CAN and LIN incorporated)

Package	Device	Order Name
30-pin plastic SSOP	Grade L	R5F10BACLSP, R5F10BADLSP, R5F10BAELSP, R5F10BAFLSP, R5F10BAGLSP
	Grade K	R5F10BACKSP, R5F10BADKSP, R5F10BAEKSP, R5F10BAFKSP, R5F10BAGKSP
	Grade Y	R5F10BACYSP, R5F10BADYSP, R5F10BAEYSP, R5F10BAFYSP, R5F10BAGYSP
32-pin plastic VQFN	Grade L	R5F10BBCLNA, R5F10BBDLNA, R5F10BBELNA, R5F10BBFLNA, R5F10BBGLNA
	Grade K	R5F10BBCKNA, R5F10BBDKNA, R5F10BBEKNA, R5F10BBFKNA, R5F10BBGKNA
	Grade Y	R5F10BBCYNA, R5F10BBDYNA, R5F10BBEYNA, R5F10BBFYNA, R5F10BBGYNA
48-pin plastic LQFP	Grade L	R5F10BGCCLFB, R5F10BGDCLFB, R5F10BGECLFB, R5F10BGFCLFB, R5F10BGGCLFB
	Grade K	R5F10BGCCKFB, R5F10BGDCKFB, R5F10BGECKFB, R5F10BGFCKFB, R5F10BGGCKFB
	Grade Y	R5F10BGCYFB, R5F10BGDYFB, R5F10BGEYFB, R5F10BGFYFB, R5F10BGGYFB
48-pin plastic VQFN	Grade L	R5F10BGCLNA, R5F10BGDLNA, R5F10BGELNA, R5F10BGFLNA, R5F10BGGLNA
	Grade K	R5F10BGCKNA, R5F10BGDKNA, R5F10BGEKNA, R5F10BGFKNA, R5F10BGGKNA
	Grade Y	R5F10BGCYNA, R5F10BGDYNA, R5F10BGEYNA, R5F10BGFYNA, R5F10BGGYNA
64-pin plastic LQFP	Grade L	R5F10BLCCLFB, R5F10BLDCLFB, R5F10BLECLFB, R5F10BLFCLFB, R5F10BLGCLFB
	Grade K	R5F10BLCCKFB, R5F10BLDCKFB, R5F10BLECKFB, R5F10BLFCKFB, R5F10BLGCKFB
	Grade Y	R5F10BLCYFB, R5F10BLDYFB, R5F10BLEYFB, R5F10BLFYFB, R5F10BLGYFB
80-pin plastic LQFP	Grade L	R5F10BMECLFB, R5F10BMFCLFB, R5F10BMGCLFB
	Grade K	R5F10BMECKFB, R5F10BMFCKFB, R5F10BMGCKFB
	Grade Y	R5F10BMEYFB, R5F10BMFYFB, R5F10BMGYFB

Table 1-9. Order Information for RL78/F13 (LIN incorporated)

Package	Device	Order Name
20-pin plastic SSOP	Grade L	R5F10A6ALSP, R5F10A6CLSP, R5F10A6DLSP, R5F10A6ELSP
	Grade K	R5F10A6AKSP, R5F10A6CKSP, R5F10A6DKSP, R5F10A6EKSP
	Grade Y	R5F10A6AYSP, R5F10A6CYSP, R5F10A6DYSP, R5F10A6EYSP
30-pin plastic SSOP	Grade L	R5F10AAALSP, R5F10AACLSP, R5F10AADLSP, R5F10AAELSP
	Grade K	R5F10AAAKSP, R5F10AACKSP, R5F10AADKSP, R5F10AAEKSP
	Grade Y	R5F10AAAYSP, R5F10AACYSP, R5F10AADYSP, R5F10AAEYSP
32-pin plastic VQFN	Grade L	R5F10ABALNA, R5F10ABCLNA, R5F10ABDLNA, R5F10ABELNA
	Grade K	R5F10ABAKNA, R5F10ABCKNA, R5F10ABDKNA, R5F10ABEKNA
	Grade Y	R5F10ABAYNA, R5F10ABCYNA, R5F10ABDYNA, R5F10ABEYNA
48-pin plastic LQFP	Grade L	R5F10AGACLFB, R5F10AGCCLFB, R5F10AGDCLFB, R5F10AGECLFB, R5F10AGFCLFB, R5F10AGGCLFB
	Grade K	R5F10AGACKFB, R5F10AGCCKFB, R5F10AGDCKFB, R5F10AGECKFB, R5F10AGFCKFB, R5F10AGGCKFB
	Grade Y	R5F10AGAYFB, R5F10AGCYFB, R5F10AGDYFB, R5F10AGEYFB, R5F10AGFYFB, R5F10AGGYFB
48-pin plastic VQFN	Grade L	R5F10AGALNA, R5F10AGCLNA, R5F10AGDLNA, R5F10AGELNA, R5F10AGFLNA, R5F10AGGLNA
	Grade K	R5F10AGAKNA, R5F10AGCKNA, R5F10AGDKNA, R5F10AGEKNA, R5F10AGFKNA, R5F10AGGKNA
	Grade Y	R5F10AGAYNA, R5F10AGCYNA, R5F10AGDYNA, R5F10AGEYNA, R5F10AGFYNA, R5F10AGGYNA
64-pin plastic LQFP	Grade L	R5F10ALCCLFB, R5F10ALDCLFB, R5F10ALECLFB, R5F10ALFCLFB, R5F10ALGCLFB
	Grade K	R5F10ALCCKFB, R5F10ALDCKFB, R5F10ALECKFB, R5F10ALFCKFB, R5F10ALGCKFB
	Grade Y	R5F10ALCYFB, R5F10ALDYFB, R5F10ALEYFB, R5F10ALFYFB, R5F10ALGYFB
80-pin plastic LQFP	Grade L	R5F10AMECLFB, R5F10AMFCLFB, R5F10AMGCLFB
	Grade K	R5F10AMECKFB, R5F10AMFCKFB, R5F10AMGCKFB
	Grade Y	R5F10AMEYFB, R5F10AMFYFB, R5F10AMGYFB

CHAPTER 2 PIN FUNCTIONS

2.1 Pin Function List

Pin I/O buffer power supplies depend on the product. Table 2-1 shows the relationship between these power supplies and the pins. EV_{DD} indicates EV_{DD0} and EV_{DD1}.

Table 2-1. Pin I/O Buffer Power Supplies

(1) 20-pin, 30-pin, 32-pin, and 48-pin products

Power Supply	Corresponding Pins
V_{DD}	All pins

(2) 64-pin products

Power Supply	Corresponding Pins
EV_{DD0}	• Port pins other than P33, P34, P80 to P87, P90 to P96 **Note**, P121 to P124, and P137
V_{DD}	• P33, P34, P80 to P87, P90 to P96 **Note**, P121 to P124, and P137 • Pins other than port pins

Note In R5F10PLE, R5F10PLF, R5F10BLC, R5F10BLD, R5F10BLE, R5F10BLF, R5F10BLG, R5F10ALF, and R5F10ALG, the power supply for P96 is EV_{DD0}. In R5F10ALC, R5F10ALD, and R5F10ALE, the power supply for P92 to P97 is EV_{DD0}.

(3) 80-pin products

Power Supply	Corresponding Pins
EV_{DD0}	• Port pins other than P33, P34, P80 to P87, P90 to P97 **Note**, P121 to P124, and P137
V_{DD}	• P33, P34, P80 to P87, P90 to P97 **Note**, P121 to P124, and P137 • Pins other than port pins

Note In R5F10PME, R5F10PMF, R5F10BME, R5F10BMF, R5F10BMG, R5F10AME, R5F10AMF, and R5F10AMG, the power supply for P96 and P97 is EV_{DD0}.

(4) 100-pin products

Power Supply	Corresponding Pins
EV_{DD0}, EV_{DD1}	• Port pins other than P33, P34, P80 to P87, P90 to P97, P100 to P105, P121 to P124, and P137
V_{DD}	• P33, P34, P80 to P87, P90 to P97, P100 to P105, P121 to P124, and P137 • Pins other than port pins

The products are classified into the following five groups according to the product type, pin count, and code flash memory size.

Group A: RL78/F13 (LIN incorporated) products with 20, 30, 32, 48, or 64 pins and 16 Kbytes to 64 Kbytes of code flash memory

Group B: RL78/F13 (LIN incorporated) products with 48 or 64 pins and 96 Kbytes to 128 Kbytes of code flash memory or with 80 pins and 64 Kbytes to 128 Kbytes of code flash memory

Group C: RL78/F13 (CAN and LIN incorporated) products with 30, 32, 48, 64, or 80 pins and 32 Kbytes to 128 Kbytes of code flash memory

Group D: RL78/F14 products with 30, 32, 48, 64, or 80 pins and 48 Kbytes to 96 Kbytes of code flash memory

Group E: RL78/F14 products with 48, 64, or 80 pins and 128 Kbytes to 256 Kbytes of code flash memory or with 100 pins and 64 Kbytes to 256 Kbytes of code flash memory

This subchapter describes the 100-pin products of RL78/F14 and the 80-pin products of RL78/F13 (CAN and LIN incorporated) as examples.

2.1.1 RL78/F14 100-pin products

(1/2)

Function Name	I/O	Function	After Reset	Alternate Function
P00	I/O	Port 0 Use of an on-chip pull-up resistor can be specified by a software setting.	Input port	(TI05)/(TO05)/INTP9
P01				(TI04)/(TO04)
P02				(TI06)/(TO06)
P03				(RTC1HZ)
P10	I/O	Port 1 Input of P10, P11, P13, P14, P16, and P17 can be set to TTL input buffer. Use of an on-chip pull-up resistor can be specified by a software setting. Output from P10 to P17 can be set to N-ch open-drain output. For input to P10, P11, P13, P14, P16, and P17, the threshold level can be specified.	Input port	TI13/TO13/TRJO0/$\overline{\text{SCK10}}$/SCL10/LTXD1/CTXD0
P11				TI12/TO12/(TRDIOB0)/SI10/SDA10/RXD1/LRXD1/CRXD0
P12				TI11/TO11/(TRDIOD0)/INTP5/SO10/TXD1/SNZOUT3
P13				TI04/TO04/TRDIOA0/TRDCLK0/SI01/SDA01/LTXD0
P14				TI06/TO06/TRDIOC0/$\overline{\text{SCK01}}$/SCL01/LRXD0
P15				TI05/TO05/TRDIOA1/(TRDIOA0)/(TRDCLK0)/SO00/TXD0/TOOLTXD/RTC1HZ
P16				TI02/TO02/TRDIOC1/SI00/SDA00/RXD0/TOOLRXD
P17				TI00/TO00/TRDIOB1/$\overline{\text{SCK00}}$/SCL00/INTP3
P30	I/O	Port 3 Input of P30 can be set to TTL input buffer. P33 and P34 can be set to analog input. For input to P30 to P32, use of an on-chip pull-up resistor can be specified by a software setting. For input to P30, the threshold level can be specified.	Input port	TI01/TO01/TRDIOD1/$\overline{\text{SSI00}}$/INTP2/SNZOUT0
P31				TI14/TO14/STOPST/(INTP2)
P32				TI16/TO16/INTP7
P33			Analog input port	AV_{REFP}/ANI0
P34				AV_{REFM}/ANI1
P40	I/O	Port 4 Use of an on-chip pull-up resistor can be specified by a software setting. For input to P43, the threshold level can be specified.	Input port	TOOL0
P41				TI10/TO10/TRJIO0/VCOUT0/SNZOUT2
P42				(LTXD0)
P43				(LRXD0)
P44				(TI07)/(TO07)
P45				(TI10)/(TO10)
P46				(TI12)/(TO12)
P47				INTP13
P50	I/O	Port 5 Input of P54 can be set to TTL input buffer. Use of an on-chip pull-up resistor can be specified by a software setting. For input to P50 and P52 to P54, the threshold level can be specified.	Input port	($\overline{\text{SSI01}}$)/(INTP3)
P51				(SO01)/INTP11
P52				($\overline{\text{SCK01}}$)/(STOPST)
P53				(SI01)/INTP10
P54				(TI11)/(TO11)/$\overline{\text{SSI10}}$
P55				(TI13)/(TO13)
P56				(TI15)/(TO15)/(SNZOUT1)
P57				(TI17)/(TO17)/(SNZOUT0)
P60	I/O	Port 6 Input of P62 and P63 can be set to TTL input buffer. Use of an on-chip pull-up resistor can be specified by a software setting. Output from P60 to P63 can be set to N-ch open-drain output. For input to P60 to P63, the threshold level can be specified.	Input port	($\overline{\text{SCK00}}$)/(SCL00)
P61				(SI00)/(SDA00)/(RXD0)
P62				(SO00)/(TXD0)/SCLA0
P63				($\overline{\text{SSI00}}$)/SDAA0
P64				(TI14)/(TO14)/(SNZOUT3)
P65				(TI16)/(TO16)/(SNZOUT2)
P66				(TI00)/(TO00)
P67				(TI02)/(TO02)

Remark Functions in parentheses in the above table can be assigned via settings in the peripheral I/O redirection registers (PIOR). Only the STOPST function of P52 can be assigned via settings in the STOP status output control register (STPSTC).

(2/2)

Function Name	I/O	Function	After Reset	Alternate Function
P70	I/O	Port 7 Input of P70, P71, and P73 can be set to TTL input buffer. P70 to P74 can be set to analog input. Use of an on-chip pull-up resistor can be specified by a software setting. Output from P70 to P72 can be set to N-ch open-drain output. For input to P70, P71, P73, and P75 to P77, the threshold level can be specified.	Analog input port	ANI26/KR0/TI15/TO15/INTP8/SI11/SDA11/SNZOUT4
P71				ANI27/KR1/TI17/TO17/INTP6/SCK11/SCL11/SNZOUT5
P72				ANI28/KR2/(CTXD0)/SO11/SNZOUT6
P73				ANI29/KR3/(CRXD0)/$\overline{\text{SSI11}}$/SNZOUT7
P74				ANI30/KR4/(SO10)/(TXD1)
P75			Input port	KR5/(SI10)/(RXD1)
P76				KR6/($\overline{\text{SCK10}}$)
P77				KR7/($\overline{\text{SSI10}}$)/INTP12
P80	I/O	Port 8 P80 to P87 can be set to analog input.	Analog input port	ANI2/ANO0
P81				ANI3/IVCMP00
P82				ANI4/IVCMP01
P83				ANI5/IVCMP02
P84				ANI6/IVCMP03
P85				ANI7/IVREF0
P86				ANI8
P87				ANI9
P90	I/O	Port 9 P90 to P97 can be set to analog input.	Analog input port	ANI10
P91				ANI11
P92				ANI12
P93				ANI13
P94				ANI14
P95				ANI15
P96				ANI16
P97				ANI17
P100	I/O	Port 10 P100 to P105 can be set to analog input. For P106 and P107, use of an on-chip pull-up resistor can be specified by a software setting. For input to P107, the threshold level can be specified.	Analog input port	ANI18
P101				ANI19
P102				ANI20
P103				ANI21
P104				ANI22
P105				ANI23
P106			Input port	(LTXD1)
P107				(LRXD1)
P120	I/O	Port 12 Input of P125 can be set to TTL input buffer. P120 and P125 can be set to analog input. For P120 and P125 to P127, use of an on-chip pull-up resistor can be specified by a software setting. Output from P120 can be set to N-ch open-drain output. For input to P125, the threshold level can be specified.	Analog input port	ANI25/TI07/TO07/TRDIOD0/SO01/INTP4
P121	Input		Input port	X1
P122				X2/EXCLK
P123				XT1
P124				XT2/EXCLKS
P125	I/O		Analog input port	ANI24/TI03/TO03/TRDIOB0/SSI01/INTP1/SNZOUT1
P126			Input port	(TI01)/(TO01)
P127				(TI03)/(TO03)
P130	Output	Port 13	Output port	RESOUT
P137	Input		Input port	INTP0
P140	I/O	Port 14 Use of an on-chip pull-up resistor can be specified by a software setting.	Input port	PCLBUZ0
P150	I/O	Port 15 Use of an on-chip pull-up resistor can be specified by a software setting. For input to P150, P152, and P153, the threshold level can be specified.	Input port	($\overline{\text{SSI11}}$)
P151				(SO11)
P152				(SI11)
P153				($\overline{\text{SCK11}}$)
P154				(SNZOUT7)
P155				(SNZOUT6)
P156				(SNZOUT5)
P157				(SNZOUT4)

Remark Functions in parentheses in the above table can be assigned via settings in the peripheral I/O redirection registers (PIOR).

2.1.2 RL78/F13 (CAN and LIN incorporated) 80-pin products

(1/2)

Function Name	I/O	Function	After Reset	Alternate Function
P00	I/O	Port 0 Use of an on-chip pull-up resistor can be specified by a software setting.	Input port	(TI05)/(TO05)/INTP9
P01				(TI04)/(TO04)
P02				(TI06)/(TO06)
P10	I/O	Port 1 Input of P10, P11, P13, P14, P16, and P17 can be set to TTL input buffer. Use of an on-chip pull-up resistor can be specified by a software setting. Output from P10 to P17 can be set to N-ch open-drain output. For input to P10, P11, P13, P14, P16, and P17, the threshold level can be specified.	Input port	TI13/TO13/TRJO0/$\overline{\text{SCK10}}$/SCL10/CTXD0
P11				TI12/TO12/(TRDIOB0)/SI10/SDA10/RXD1/CRXD0
P12				TI11/TO11/(TRDIOD0)/INTP5/SO10/TXD1/SNZOUT3
P13				TI04/TO04/TRDIOA0/TRDCLK0/SI01/SDA01/LTXD0
P14				TI06/TO06/TRDIOC0/$\overline{\text{SCK01}}$/SCL01/LRXD0
P15				TI05/TO05/TRDIOA1/(TRDIOA0)/(TRDCLK0)/SO00/TXD0/TOOLTXD/RTC1HZ
P16				TI02/TO02/TRDIOC1/SI00/SDA00/RXD0/TOOLRXD
P17				TI00/TO00/TRDIOB1/$\overline{\text{SCK00}}$/SCL00/INTP3
P30	I/O	Port 3 Input of P30 can be set to TTL input buffer. P33 and P34 can be set to analog input. For input to P30 to P32, use of an on-chip pull-up resistor can be specified by a software setting. For input to P30, the threshold level can be specified.	Input port	TI01/TO01/TRDIOD1/$\overline{\text{SSI00}}$/INTP2/SNZOUT0
P31				STOPST/(INTP2)
P32				INTP7
P33			Analog input port	AV_{REFP}/ANI0
P34				AV_{REFM}/ANI1
P40	I/O	Port 4 Use of an on-chip pull-up resistor can be specified by a software setting. For input to P43, the threshold level can be specified.	Input port	TOOL0
P41				TI10/TO10/TRJIO0/SNZOUT2
P42				(LTXD0)
P43				(LRXD0)
P44				(TI07)/(TO07)
P45				(TI10)/(TO10)
P46				(TI12)/(TO12)
P47				—
P50	I/O	Port 5 Use of an on-chip pull-up resistor can be specified by a software setting. For input to P50 and P52 to P54, the threshold level can be specified. Input of P54 can be set to TTL input buffer.	Input port	($\overline{\text{SSI01}}$)/(INTP3)
P51				(SO01)/INTP11
P52				($\overline{\text{SCK01}}$)/(STOPST)
P53				(SI01)/INTP10
P54				(TI11)/(TO11)/$\overline{\text{SSI10}}$
P55				(TI13)/(TO13)
P56				(SNZOUT1)
P57				(SNZOUT0)
P60	I/O	Port 6 Input of P62 and P63 can be set to TTL input buffer. Use of an on-chip pull-up resistor can be specified by a software setting. Output from P60 to P63 can be set to N-ch open-drain output. For input to P60 to P63, the threshold level can be specified.	Input port	($\overline{\text{SCK00}}$)/(SCL00)
P61				(SI00)/(SDA00)/(RXD0)
P62				(SO00)/(TXD0)/SCLA0
P63				($\overline{\text{SSI00}}$)/SDAA0
P64				(SNZOUT3)
P65				(SNZOUT2)
P66				(TI00)/(TO00)
P67				(TI02)/(TO02)

Remark Functions in parentheses in the above table can be assigned via settings in the peripheral I/O redirection registers (PIOR). Only the STOPST function of P52 can be assigned via settings in the STOP status output control register (STPSTC).

(2/2)

Function Name	I/O	Function	After Reset	Alternate Function
P70	I/O	Port 7 Input of P70, P71, and P73 can be set to TTL input buffer. Use of an on-chip pull-up resistor can be specified by a software setting. Output from P70 to P72 can be set to N-ch open-drain output. For input to P70, P71, P73, and P75 to P77, the threshold level can be specified.	Input port	KR0/INTP8/SI11/SDA11/SNZOUT4
P71				KR1/INTP6/$\overline{\text{SCK11}}$/SCL11/SNZOUT5
P72				KR2/(CTXD0)/SO11/SNZOUT6
P73				KR3/(CRXD0)/$\overline{\text{SSI11}}$/SNZOUT7
P74				KR4/(SO10)/(TXD1)
P75				KR5/(SI10)/(RXD1)
P76				KR6/($\overline{\text{SCK10}}$)
P77				KR7/($\overline{\text{SSI10}}$)
P80	I/O	Port 8 P80 to P87 can be set to analog input.	Analog input port	ANI2
P81				ANI3
P82				ANI4
P83				ANI5
P84				ANI6
P85				ANI7
P86				ANI8
P87				ANI9
P90	I/O	Port 9 P90 to P97 can be set to analog input. For P96 and P97, use of an on-chip pull-up resistor can be specified by a software setting.	Analog input port	ANI10
P91				ANI11
P92				ANI12
P93				ANI13
P94				ANI14
P95				ANI15
P96				ANI26
P97				ANI27
P120	I/O	Port 12 Input of P125 can be set to TTL input buffer. P120 and P125 can be set to analog input. For P120, P125, and P126, use of an on-chip pull-up resistor can be specified by a software setting. Output from P120 can be set to N-ch open-drain output. For input to P125, the threshold level can be specified.	Analog input port	ANI25/TI07/TO07/TRDIOD0/SO01/INTP4
P121	Input		Input port	X1
P122				X2/EXCLK
P123				XT1
P124				XT2/EXCLKS
P125	I/O		Analog input port	ANI24/TI03/TO03/TRDIOB0/$\overline{\text{SSI01}}$/INTP1/SNZOUT1
P126			Input port	(TI01)/(TO01)
P130	Output	Port 13	Output port	RESOUT
P137	Input		Input port	INTP0
P140	I/O	Port 14 Use of an on-chip pull-up resistor can be specified by a software setting.	Input port	PCLBUZ0

Remark Functions in parentheses in the above table can be assigned via settings in the peripheral I/O redirection registers (PIOR).

2.1.3 RL78/F13 (LIN incorporated) 80-pin products

(1/2)

Function Name	I/O	Function	After Reset	Alternate Function
P00	I/O	Port 0 Use of an on-chip pull-up resistor can be specified by a software setting.	Input port	(TI05)/(TO05)/INTP9
P01				(TI04)/(TO04)
P02				(TI06)/(TO06)
P10	I/O	Port 1 Input of P10, P11, P13, P14, P16, and P17 can be set to TTL input buffer. Use of an on-chip pull-up resistor can be specified by a software setting. Output from P10 to P17 can be set to N-ch open-drain output. For input to P10, P11, P13, P14, P16, and P17, the threshold level can be specified.	Input port	TI13/TO13/TRJO0/$\overline{\text{SCK10}}$/SCL10
P11				TI12/TO12/(TRDIOB0)/SI10/SDA10/RXD1
P12				TI11/TO11/(TRDIOD0)/INTP5/SO10/TXD1/SNZOUT3
P13				TI04/TO04/TRDIOA0/TRDCLK0/SI01/SDA01/LTXD0
P14				TI06/TO06/TRDIOC0/$\overline{\text{SCK01}}$/SCL01/LRXD0
P15				TI05/TO05/TRDIOA1/(TRDIOA0)/(TRDCLK0)/SO00/TXD0/TOOLTXD/RTC1HZ
P16				TI02/TO02/TRDIOC1/SI00/SDA00/RXD0/TOOLRXD
P17				TI00/TO00/TRDIOB1/$\overline{\text{SCK00}}$/SCL00/INTP3
P30	I/O	Port 3 Input of P30 can be set to TTL input buffer. P33 and P34 can be set to analog input. For input to P30 to P32, use of an on-chip pull-up resistor can be specified by a software setting. For input to P30, the threshold level can be specified.	Input port	TI01/TO01/TRDIOD1/$\overline{\text{SSI00}}$/INTP2/SNZOUT0
P31				STOPST/(INTP2)
P32				INTP7
P33			Analog input port	AVREFP/ANI0
P34				AVREFM/ANI1
P40	I/O	Port 4 Use of an on-chip pull-up resistor can be specified by a software setting. For input to P43, the threshold level can be specified.	Input port	TOOL0
P41				TI10/TO10/TRJIO0/SNZOUT2
P42				(LTXD0)
P43				(LRXD0)
P44				(TI07)/(TO07)
P45				(TI10)/(TO10)
P46				(TI12)/(TO12)
P47				—
P50	I/O	Port 5 Use of an on-chip pull-up resistor can be specified by a software setting. For input to P50 and P52 to P54, the threshold level can be specified. Input of P54 can be set to TTL input buffer.	Input port	($\overline{\text{SSI01}}$)/(INTP3)
P51				(SO01)/INTP11
P52				($\overline{\text{SCK01}}$)/(STOPST)
P53				(SI01)/INTP10
P54				(TI11)/(TO11)/$\overline{\text{SSI10}}$
P55				(TI13)/(TO13)
P56				(SNZOUT1)
P57				(SNZOUT0)
P60	I/O	Port 6 Input of P62 and P63 can be set to TTL input buffer. Use of an on-chip pull-up resistor can be specified by a software setting. Output from P60 to P63 can be set to N-ch open-drain output. For input to P60 to P63, the threshold level can be specified.	Input port	($\overline{\text{SCK00}}$)/(SCL00)
P61				(SI00)/(SDA00)/(RXD0)
P62				(SO00)/(TXD0)/SCLA0
P63				($\overline{\text{SSI00}}$)/SDAA0
P64				(SNZOUT3)
P65				(SNZOUT2)
P66				(TI00)/(TO00)
P67				(TI02)/(TO02)

Remark Functions in parentheses in the above table can be assigned via settings in the peripheral I/O redirection registers (PIOR). Only the STOPST function of P52 can be assigned via settings in the STOP status output control register (STPSTC).

(2/2)

Function Name	I/O	Function	After Reset	Alternate Function
P70	I/O	Port 7 Input of P70, P71, and P73 can be set to TTL input buffer. Use of an on-chip pull-up resistor can be specified by a software setting. Output from P70 to P72 can be set to N-ch open-drain output. For input to P70, P71, P73, and P75 to P77, the threshold level can be specified.	Input port	KR0/INTP8/SI11/SDA11/SNZOUT4
P71				KR1/INTP6/$\overline{\text{SCK11}}$/SCL11/SNZOUT5
P72				KR2/SO11/SNZOUT6
P73				KR3/$\overline{\text{SSI11}}$/SNZOUT7
P74				KR4/(SO10)/(TXD1)
P75				KR5/(SI10)/(RXD1)
P76				KR6/($\overline{\text{SCK10}}$)
P77				KR7/($\overline{\text{SSI10}}$)
P80	I/O	Port 8 P80 to P87 can be set to analog input.	Analog input port	ANI2
P81				ANI3
P82				ANI4
P83				ANI5
P84				ANI6
P85				ANI7
P86				ANI8
P87				ANI9
P90	I/O	Port 9 P90 to P97 can be set to analog input. For P96 and P97, use of an on-chip pull-up resistor can be specified by a software setting.	Analog input port	ANI10
P91				ANI11
P92				ANI12
P93				ANI13
P94				ANI14
P95				ANI15
P96				ANI26
P97				ANI27
P120	I/O	Port 12 Input of P125 can be set to TTL input buffer. P120 and P125 can be set to analog input. For P120, P125, and P126, use of an on-chip pull-up resistor can be specified by a software setting. Output from P120 can be set to N-ch open-drain output. For input to P125, the threshold level can be specified.	Analog input port	ANI25/TI07/TO07/TRDIOD0/SO01/INTP4
P121	Input		Input port	X1
P122				X2/EXCLK
P123				XT1
P124				XT2/EXCLKS
P125	I/O		Analog input port	ANI24/TI03/TO03/TRDIOB0/$\overline{\text{SSI01}}$/INTP1/SNZOUT1
P126			Input port	(TI01)/(TO01)
P130	Output	Port 13	Output port	RESOUT
P137	Input		Input port	INTP0
P140	I/O	Port 14 Use of an on-chip pull-up resistor can be specified by a software setting.	Input port	PCLBUZ0

Remark Functions in parentheses in the above table can be assigned via settings in the peripheral I/O redirection registers (PIOR).

2.1.4 Pins for each product (pins other than port pins)

This subchapter shows the pins other than the ports shown in tables 2-2 to 2-4 for each product.
√ indicates the pin that is provided in the product and — indicates the pin that is not provided.

Table 2-2. List of RL78/F14 Pins Other than Port Pins (1/5)

Pin Function	I/O	Function	Pin Count					
			100-pin	80-pin	64-pin	48-pin	32-pin	30-pin
ANI0	Input	A/D converter analog input (V_{DD} connection)	√	√	√	√	√	√
ANI1	Input		√	√	√	√	√	√
ANI2	Input		√	√	√	√	√	√
ANI3	Input		√	√	√	√	√	√
ANI4	Input		√	√	√	√	√	√
ANI5	Input		√	√	√	√	√	√
ANI6	Input		√	√	√	√	√	√
ANI7	Input		√	√	√	√	√	√
ANI8	Input		√	√	√	√	—	√
ANI9	Input		√	√	√	√	—	√
ANI10	Input		√	√	√	√	—	—
ANI11	Input		√	√	√	√	—	—
ANI12	Input		√	√	√	√	—	—
ANI13	Input		√	√	√	—	—	—
ANI14	Input		√	√	√	—	—	—
ANI15	Input		√	√	√	—	—	—
ANI16	Input		√	√ Note 1	√ Note 1	—	—	—
ANI17	Input		√	√ Note 1	—	—	—	—
ANI18	Input		√	—	—	—	—	—
ANI19	Input		√	—	—	—	—	—
ANI20	Input		√	—	—	—	—	—
ANI21	Input		√	—	—	—	—	—
ANI22	Input		√	—	—	—	—	—
ANI23	Input		√	—	—	—	—	—
ANI24	Input	A/D converter analog input (EV_{DD} connection)	√	√	√	√	√	√
ANI25	Input		√	√	√	√	√	√
ANI26	Input		√	√	√	√ Note 1	—	—
ANI27	Input		√	√	—	√ Note 1	—	—
ANI28	Input		√	√ Note 1	—	√ Note 1	—	—
ANI29	Input		√	√ Note 1	—	—	—	—
ANI30	Input		√	√ Note 1	—	—	—	—
IVCMP00	Input	Comparator analog voltage input	√	√	√	√	√	√
IVCMP01	Input		√	√	√	√	√	√
IVCMP02	Input		√	√	√	√	√	√
IVCMP03	Input		√	√	√	√	√	√
IVREF0	Input	Comparator reference voltage input	√	√	√	√	√	√

Note 1. Provided only in Group E products.

Table 2-2. List of RL78/F14 Pins Other than Port Pins (2/5)

Pin Function	I/O	Function	Pin Count					
			100-pin	80-pin	64-pin	48-pin	32-pin	30-pin
KR0	Input	Key interrupt input	√	√	√	√	√	√
KR1	Input		√	√	√	√	√	√
KR2	Input		√	√	√	√	√	√
KR3	Input		√	√	√	√	√	√
KR4	Input		√	√	√	√	√	√
KR5	Input		√	√	√	√	√	√
KR6	Input		√	√	√	√	—	√
KR7	Input		√	√	√	√	—	√
ANO0	Output	D/A converter output	√	√	√	√	√	√
VCOUT0	Output	Comparator output	√	√	√	√	√	√
TI00	Input	16-bit timer 00 input	√	√	√	√	√	√
TI01	Input	16-bit timer 01 input (8-bit mode available)	√	√	√	√	√	√
TI02	Input	16-bit timer 02 input	√	√	√	√	√	√
TI03	Input	16-bit timer 03 input (8-bit mode available)	√	√	√	√	√	√
TI04	Input	16-bit timer 04 input	√	√	√	√	√	√
TI05	Input	16-bit timer 05 input	√	√	√	√	√	√
TI06	Input	16-bit timer 06 input	√	√	√	√	√	√
TI07	Input	16-bit timer 07 input	√	√	√	√	√	√
TI10	Input	16-bit timer 10 input	√	√	√	√	√	√
TI11	Input	16-bit timer 11 input (8-bit mode available)	√	√	√	√	√	√
TI12	Input	16-bit timer 12 input	√	√	√	√	√	√
TI13	Input	16-bit timer 13 input (8-bit mode available)	√	√	√	√	√	√
TI14	Input	16-bit timer 14 input	√	√ Note 1	√ Note 1	√ Note 1	—	—
TI15	Input	16-bit timer 15 input	√	√ Note 1	√ Note 1	√ Note 1	—	—
TI16	Input	16-bit timer 16 input	√	√ Note 1	√ Note 1	√ Note 1	—	—
TI17	Input	16-bit timer 17 input	√	√ Note 1	√ Note 1	√ Note 1	—	—
TO00	Output	16-bit timer 00 output	√	√	√	√	√	√
TO01	Output	16-bit timer 01 output (8-bit mode available)	√	√	√	√	√	√
TO02	Output	16-bit timer 02 output	√	√	√	√	√	√
TO03	Output	16-bit timer 03 output (8-bit mode available)	√	√	√	√	√	√
TO04	Output	16-bit timer 04 output	√	√	√	√	√	√
TO05	Output	16-bit timer 05 output	√	√	√	√	√	√
TO06	Output	16-bit timer 06 output	√	√	√	√	√	√
TO07	Output	16-bit timer 07 output	√	√	√	√	√	√
TO10	Output	16-bit timer 10 output	√	√	√	√	√	√
TO11	Output	16-bit timer 11 output (8-bit mode available)	√	√	√	√	√	√
TO12	Output	16-bit timer 12 output	√	√	√	√	√	√
TO13	Output	16-bit timer 13 output (8-bit mode available)	√	√	√	√	√	√
TO14	Output	16-bit timer 14 output	√	√ Note 1	√ Note 1	√ Note 1	—	—
TO15	Output	16-bit timer 15 output	√	√ Note 1	√ Note 1	√ Note 1	—	—
TO16	Output	16-bit timer 16 output	√	√ Note 1	√ Note 1	√ Note 1	—	—
TO17	Output	16-bit timer 17 output	√	√ Note 1	√ Note 1	√ Note 1	—	—

Note 1. Provided only in Group E products.

Table 2-2. List of RL78/F14 Pins Other than Port Pins (3/5)

Pin Function	I/O	Function	Pin Count					
			100-pin	80-pin	64-pin	48-pin	32-pin	30-pin
TRJIO0	I/O	Timer RJ input/output	√	√	√	√	√	√
TRJO0	Output	Timer RJ output	√	√	√	√	√	√
TRDCLK0	Input	Timer RD external clock input	√	√	√	√	√	√
TRDIOA0	I/O	Timer RD0 input/output	√	√	√	√	√	√
TRDIOB0	I/O		√	√	√	√	√	√
TRDIOC0	I/O		√	√	√	√	√	√
TRDIOD0	I/O		√	√	√	√	√	√
TRDIOA1	I/O	Timer RD1 input/output	√	√	√	√	√	√
TRDIOB1	I/O		√	√	√	√	√	√
TRDIOC1	I/O		√	√	√	√	√	√
TRDIOD1	I/O		√	√	√	√	√	√
RXD0	Input	Serial data input to UART0	√	√	√	√	√	√
RXD1	Input	Serial data input to UART1	√	√	√	√	√	√
TXD0	Output	Serial data output from UART0	√	√	√	√	√	√
TXD1	Output	Serial data output from UART1	√	√	√	√	√	√
SCLA0	I/O	Clock input/output for IICA0	√	√	√	√	√	—
SCL00	Output	Clock output from simplified I^2C	√	√	√	√	√	√
SCL01	Output		√	√	√	√	√	√
SCL10	Output		√	√	√	√	√	√
SCL11	Output		√	√	√	√	—	—
SDAA0	I/O	Serial data input/output for IICA0	√	√	√	√	√	—
SDA00	I/O	Serial data input/output for simplified I^2C	√	√	√	√	√	√
SDA01	I/O		√	√	√	√	√	√
SDA10	I/O		√	√	√	√	√	√
SDA11	I/O		√	√	√	√	—	—
$\overline{SCK00}$	I/O	Clock input/output for CSI00	√	√	√	√	√	√
$\overline{SCK01}$	I/O	Clock input/output for CSI01	√	√	√	√	√	√
$\overline{SCK10}$	I/O	Clock input/output for CSI10	√	√	√	√	√	√
$\overline{SCK11}$	I/O	Clock input/output for CSI11	√	√	√	√	—	—
SI00	Input	Serial data input to CSI00	√	√	√	√	√	√
SI01	Input	Serial data input to CSI01	√	√	√	√	√	√
SI10	Input	Serial data input to CSI10	√	√	√	√	√	√
SI11	Input	Serial data input to CSI11	√	√	√	√	—	—
SO00	Output	Serial data output from CSI00	√	√	√	√	√	√
SO01	Output	Serial data output from CSI01	√	√	√	√	√	√
SO10	Output	Serial data output from CSI10	√	√	√	√	√	√
SO11	Output	Serial data output from CSI11	√	√	√	√	—	—
$\overline{SSI00}$	Input	Slave select input to CSI00 (SPI00)	√	√	√	√	√	√
$\overline{SSI01}$	Input	Slave select input to CSI01 (SPI01)	√	√	√	√	√	√
$\overline{SSI10}$	Input	Slave select input to CSI10 (SPI10)	√	√	√	—	—	—
$\overline{SSI11}$	Input	Slave select input to CSI11 (SPI11)	√	√	√	√	—	—
CRXD0	Input	Serial data input to CAN	√	√	√	√	√	√
CTXD0	Output	Serial data output from CAN	√	√	√	√	√	√

<R> **Table 2-2. List of RL78/F14 Pins Other than Port Pins (4/5)**

Pin Function	I/O	Function	Pin Count					
			100-pin	80-pin	64-pin	48-pin	32-pin	30-pin
LRXD0	Input	Serial data input to LIN	√	√	√	√	√	√
LRXD1	Input		√	√ Note 1	√ Note 1	√ Note 1	—	—
LTXD0	Output	Serial data output from LIN	√	√	√	√	√	√
LTXD1	Output		√	√ Note 1	√ Note 1	√ Note 1	—	—
INTP0	Input	External interrupt input	√	√	√	√	√	√
INTP1	Input		√	√	√	√	√	√
INTP2	Input		√	√	√	√	√	√
INTP3	Input		√	√	√	√	√	√
INTP4	Input		√	√	√	√	√	√
INTP5	Input		√	√	√	√	√	√
INTP6	Input		√	√	√	√	—	—
INTP7	Input		√	√	√	√	—	—
INTP8	Input		√	√	√	√	—	—
INTP9	Input		√	√	√	√	—	—
INTP10	Input		√	√	√	—	—	—
INTP11	Input		√	√	√	—	—	—
INTP12	Input		√	√ Note 1	√ Note 1	—	—	—
INTP13	Input		√	√ Note 1	—	—	—	—
PCLBUZ0	Output	Clock output/buzzer output 0	√	√	√	√	—	—
RESOUT	Output	Reset output	√	√	√	√	—	—
STOPST	Output	STOP status output	√	√	√	√	—	—
SNZOUT0	Output	SNOOZE status output	√	√	√	√	√	√
SNZOUT1	Output		√	√	√	√	√	√
SNZOUT2	Output		√	√	√	√	√	√
SNZOUT3	Output		√	√	√	√	√	√
SNZOUT4	Output		√	√	√	√	—	—
SNZOUT5	Output		√	√	√	√	—	—
SNZOUT6	Output		√	√	√	√	—	—
SNZOUT7	Output		√	√	√	√	—	—
RTC1HZ	Output	Real-time clock correction clock (1 Hz) output	√	√	√	√	√	√
EXCLK	Input	External clock input for main system clock	√	√	√	√	√	√
EXCLKS	Input	External clock input for subsystem clock	√	√	√	√	—	—
X1	—	Resonator connection for main system clock	√	√	√	√	√	√
X2	—		√	√	√	√	√	√
XT1 Note 3	—	Resonator connection for subsystem clock	√	√	√	√	—	—
XT2 Note 3	—		√	√	√	√	—	—
$\overline{\text{RESET}}$	Input	External reset input	√	√	√	√	√	√
REGC	—	Regulator output stabilization capacitance connection for internal operation. Connect to Vss via the capacitor (0.47 to 1 μF).	√	√	√	√	√	√
<R> V_{DD}	—	Positive power supply for the P33, P34, P80 to P87, P90 to P97 Note 2, P100 to P105, P121 to P124, P137, and $\overline{\text{RESET}}$ pins	√	√	√	√	√	√

Notes 1. Provided only in Group E products.

2. In products of Groups A to D, the positive power supply for P96 and P97 is EV_{DD0}.

3. Do not use the XT1 and XT2 pin functions in grade-Y products.

Table 2-2. List of RL78/F14 Pins Other than Port Pins (5/5)

Pin Function	I/O	Function	Pin Count					
			100-pin	80-pin	64-pin	48-pin	32-pin	30-pin
EV_{DD0}	—	Positive power supply for the pins that are not connected to V_{DD}	√	√	√	—	—	—
EV_{DD1}	—		√	—	—	—	—	—
AV_{REFP}	Input	A/D converter reference voltage (+ side) input	√	√	√	√	√	√
AV_{REFM}	Input	A/D converter reference voltage (- side) input	√	√	√	√	√	√
V_{SS}	—	Ground potential for the P33, P34, P80 to P87, P90 to P97, P100 to P105, P121 to P124, P137, and $\overline{RESET}$ pins	√	√	√	√	√	√
EV_{SS0}	—	Ground potential for the pins that are not connected to V_{SS}	√	√	√	—	—	—
EV_{SS1}	—		√	—	—	—	—	—
TOOLRXD	Input	UART reception pin for the external device connection used during flash memory programming	√	√	√	√	√	√
TOOLTXD	Output	UART transmission pin for the external device connection used during flash memory programming	√	√	√	√	√	√
TOOL0	I/O	Data input/output for flash memory programmer/debugger	√	√	√	√	√	√

Table 2-3. List of RL78/F13 (CAN and LIN incorporated) Pins Other than Port Pins (1/4)

Pin Function	I/O	Function	Pin Count				
			80-pin	64-pin	48-pin	32-pin	30-pin
ANI0	Input	A/D converter analog input (V_{DD} connection)	√	√	√	√	√
ANI1	Input		√	√	√	√	√
ANI2	Input		√	√	√	√	√
ANI3	Input		√	√	√	√	√
ANI4	Input		√	√	√	√	√
ANI5	Input		√	√	√	√	√
ANI6	Input		√	√	√	√	√
ANI7	Input		√	√	√	√	√
ANI8	Input		√	√	√	—	√
ANI9	Input		√	√	√	—	√
ANI10	Input		√	√	√	—	—
ANI11	Input		√	√	√	—	—
ANI12	Input		√	√	√	—	—
ANI13	Input		√	√	—	—	—
ANI14	Input		√	√	—	—	—
ANI15	Input		√	√	—	—	—
ANI24	Input	A/D converter analog input (EV_{DD} connection)	√	√	√	√	√
ANI25	Input		√	√	√	√	√
ANI26	Input		√	√	—	—	—
ANI27	Input		√	—	—	—	—
KR0	Input	Key interrupt input	√	√	√	√	√
KR1	Input		√	√	√	√	√
KR2	Input		√	√	√	√	√
KR3	Input		√	√	√	√	√
KR4	Input		√	√	√	√	√
KR5	Input		√	√	√	√	√
KR6	Input		√	√	√	—	√
KR7	Input		√	√	√	—	√
TI00	Input	16-bit timer 00 input	√	√	√	√	√
TI01	Input	16-bit timer 01 input (8-bit mode available)	√	√	√	√	√
TI02	Input	16-bit timer 02 input	√	√	√	√	√
TI03	Input	16-bit timer 03 input (8-bit mode available)	√	√	√	√	√
TI04	Input	16-bit timer 04 input	√	√	√	√	√
TI05	Input	16-bit timer 05 input	√	√	√	√	√
TI06	Input	16-bit timer 06 input	√	√	√	√	√
TI07	Input	16-bit timer 07 input	√	√	√	√	√
TI10	Input	16-bit timer 10 input	√	√	√	√	√
TI11	Input	16-bit timer 11 input (8-bit mode available)	√	√	√	√	√
TI12	Input	16-bit timer 12 input	√	√	√	√	√
TI13	Input	16-bit timer 13 input (8-bit mode available)	√	√	√	√	√
TO00	Output	16-bit timer 00 output	√	√	√	√	√
TO01	Output	16-bit timer 01 output (8-bit mode available)	√	√	√	√	√

Table 2-3. List of RL78/F13 (CAN and LIN incorporated) Pins Other than Port Pins (2/4)

Pin Function	I/O	Function	Pin Count				
			80-pin	64-pin	48-pin	32-pin	30-pin
TO02	Output	16-bit timer 02 output	√	√	√	√	√
TO03	Output	16-bit timer 03 output (8-bit mode available)	√	√	√	√	√
TO04	Output	16-bit timer 04 output	√	√	√	√	√
TO05	Output	16-bit timer 05 output	√	√	√	√	√
TO06	Output	16-bit timer 06 output	√	√	√	√	√
TO07	Output	16-bit timer 07 output	√	√	√	√	√
TO10	Output	16-bit timer 10 output	√	√	√	√	√
TO11	Output	16-bit timer 11 output (8-bit mode available)	√	√	√	√	√
TO12	Output	16-bit timer 12 output	√	√	√	√	√
TO13	Output	16-bit timer 13 output (8-bit mode available)	√	√	√	√	√
TRJIO0	I/O	Timer RJ input/output	√	√	√	√	√
TRJO0	Output	Timer RJ output	√	√	√	√	√
TRDCLK0	Input	Timer RD external clock input	√	√	√	√	√
TRDIOA0	I/O	Timer RD0 input/output	√	√	√	√	√
TRDIOB0	I/O		√	√	√	√	√
TRDIOC0	I/O		√	√	√	√	√
TRDIOD0	I/O		√	√	√	√	√
TRDIOA1	I/O	Timer RD1 input/output	√	√	√	√	√
TRDIOB1	I/O		√	√	√	√	√
TRDIOC1	I/O		√	√	√	√	√
TRDIOD1	I/O		√	√	√	√	√
RXD0	Input	Serial data input to UART0	√	√	√	√	√
RXD1	Input	Serial data input to UART1	√	√	√	√	√
TXD0	Output	Serial data output from UART0	√	√	√	√	√
TXD1	Output	Serial data output from UART1	√	√	√	√	√
SCLA0	I/O	Clock input/output for IICA0	√	√	√	√	—
SCL00	Output	Clock output from simplified I^2C	√	√	√	√	√
SCL01	Output		√	√	√	√	√
SCL10	Output		√	√	√	√	√
SCL11	Output		√	√	√	—	—
SDAA0	I/O	Serial data input/output for IICA0	√	√	√	√	—
SDA00	I/O	Serial data input/output for simplified I^2C	√	√	√	√	√
SDA01	I/O		√	√	√	√	√
SDA10	I/O		√	√	√	√	√
SDA11	I/O		√	√	√	—	—
$\overline{SCK00}$	I/O	Clock input/output for CSI00	√	√	√	√	√
$\overline{SCK01}$	I/O	Clock input/output for CSI01	√	√	√	√	√
$\overline{SCK10}$	I/O	Clock input/output for CSI10	√	√	√	√	√
$\overline{SCK11}$	I/O	Clock input/output for CSI11	√	√	√	—	—
SI00	Input	Serial data input to CSI00	√	√	√	√	√
SI01	Input	Serial data input to CSI01	√	√	√	√	√
SI10	Input	Serial data input to CSI10	√	√	√	√	√

Table 2-3. List of RL78/F13 (CAN and LIN incorporated) Pins Other than Port Pins (3/4)

Pin Function	I/O	Function	Pin Count				
			80-pin	64-pin	48-pin	32-pin	30-pin
SI11	Input	Serial data input to CSI11	√	√	√	—	—
SO00	Output	Serial data output from CSI00	√	√	√	√	√
SO01	Output	Serial data output from CSI01	√	√	√	√	√
SO10	Output	Serial data output from CSI10	√	√	√	√	√
SO11	Output	Serial data output from CSI11	√	√	√	—	—
$\overline{\text{SSI00}}$	Input	Slave select input to CSI00 (SPI00)	√	√	√	√	√
$\overline{\text{SSI01}}$	Input	Slave select input to CSI01 (SPI01)	√	√	√	√	√
$\overline{\text{SSI10}}$	Input	Slave select input to CSI10 (SPI10)	√	√	—	—	—
$\overline{\text{SSI11}}$	Input	Slave select input to CSI11 (SPI11)	√	√	√	—	—
CRXD0	Input	Serial data input to CAN	√	√	√	√	√
CTXD0	Output	Serial data output from CAN	√	√	√	√	√
LRXD0	Input	Serial data input to LIN	√	√	√	√	√
LTXD0	Output	Serial data output from LIN	√	√	√	√	√
INTP0	Input	External interrupt input	√	√	√	√	√
INTP1	Input		√	√	√	√	√
INTP2	Input		√	√	√	√	√
INTP3	Input		√	√	√	√	√
INTP4	Input		√	√	√	√	√
INTP5	Input		√	√	√	√	√
INTP6	Input		√	√	√	—	—
INTP7	Input		√	√	√	—	—
INTP8	Input		√	√	√	—	—
INTP9	Input		√	√	√	—	—
INTP10	Input		√	√	—	—	—
INTP11	Input		√	√	—	—	—
PCLBUZ0	Output	Clock output/buzzer output 0	√	√	√	—	—
RESOUT	Output	Reset output	√	√	√	—	—
STOPST	Output	STOP status output	√	√	√	—	—
SNZOUT0	Output	SNOOZE status output	√	√	√	√	√
SNZOUT1	Output		√	√	√	√	√
SNZOUT2	Output		√	√	√	√	√
SNZOUT3	Output		√	√	√	√	√
SNZOUT4	Output		√	√	√	—	—
SNZOUT5	Output		√	√	√	—	—
SNZOUT6	Output		√	√	√	—	—
SNZOUT7	Output		√	√	√	—	—
RTC1HZ	Output	Real-time clock correction clock (1 Hz) output	√	√	√	√	√
EXCLK	Input	External clock input for main system clock	√	√	√	√	√
EXCLKS	Input	External clock input for subsystem clock	√	√	√	—	—
X1	—	Resonator connection for main system clock	√	√	√	√	√
X2	—		√	√	√	√	√

Table 2-3. List of RL78/F13 (CAN and LIN incorporated) Pins Other than Port Pins (4/4)

Pin Function	I/O	Function	Pin Count				
			80-pin	64-pin	48-pin	32-pin	30-pin
XT1[Note]	—	Resonator connection for subsystem clock	√	√	√	—	—
XT2[Note]	—		√	√	√	—	—
$\overline{\text{RESET}}$	Input	External reset input	√	√	√	√	√
REGC	—	Regulator output stabilization capacitance connection for internal operation. Connect to Vss via the capacitor (0.47 to 1 μF).	√	√	√	√	√
V_{DD}	—	Positive power supply for the P33, P34, P80 to P87, P90 to P95, P121 to P124, P137, and $\overline{\text{RESET}}$ pins	√	√	√	√	√
EV_{DD0}	—	Positive power supply for the pins that are not connected to V_{DD}	√	√	—	—	—
AV_{REFP}	Input	A/D converter reference voltage (+ side) input	√	√	√	√	√
AV_{REFM}	Input	A/D converter reference voltage (- side) input	√	√	√	√	√
V_{SS}	—	Ground potential for the P33, P34, P80 to P87, P90 to P95, P121 to P124, P137, and $\overline{\text{RESET}}$ pins	√	√	√	√	√
EV_{SS0}	—	Ground potential for the pins that are not connected to V_{SS}	√	√	—	—	—
TOOLRXD	Input	UART reception pin for the external device connection used during flash memory programming	√	√	√	√	√
TOOLTXD	Output	UART transmission pin for the external device connection used during flash memory programming	√	√	√	√	√
TOOL0	I/O	Data input/output for flash memory programmer/debugger	√	√	√	√	√

Note Do not use the XT1 and XT2 pin functions in grade-Y products.

Table 2-4. List of RL78/F13 (LIN incorporated) Pins Other than Port Pins (1/4)

Pin Function	I/O	Function	Pin Count					
			80-pin	64-pin	48-pin	32-pin	30-pin	20-pin
ANI0	Input	A/D converter analog input (V_{DD} connection)	√	√	√	√	√	√
ANI1	Input		√	√	√	√	√	√
ANI2	Input		√	√	√	√	√	√
ANI3	Input		√	√	√	√	√	√
ANI4	Input		√	√	√	√	√	—
ANI5	Input		√	√	√	√	√	—
ANI6	Input		√	√	√	√	√	—
ANI7	Input		√	√	√	√	√	—
ANI8	Input		√	√	√	—	√	—
ANI9	Input		√	√	√	—	√	—
ANI10	Input		√	√	√	—	—	—
ANI11	Input		√	√	√	—	—	—
ANI12	Input		√	√ Note 1	√ Note 1	—	—	—
ANI13	Input		√	√ Note 1	—	—	—	—
ANI14	Input		√	√ Note 1	—	—	—	—
ANI15	Input		√	√ Note 1	—	—	—	—
ANI24	Input	A/D converter analog input (EV_{DD} connection)	√	√ Note 1	√ Note 1	—	—	—
ANI25	Input		√	√ Note 1	√ Note 1	—	—	—
ANI26	Input		√	√ Note 1	—	—	—	—
ANI27	Input		√	—	—	—	—	—
KR0	Input	Key interrupt input	√	√	√	√	√	√
KR1	Input		√	√	√	√	√	√
KR2	Input		√	√	√	√	√	—
KR3	Input		√	√	√	√	√	—
KR4	Input		√	√	√	√	√	—
KR5	Input		√	√	√	√	√	—
KR6	Input		√	√	√	—	√	—
KR7	Input		√	√	√	—	√	—
TI00	Input	16-bit timer 00 input	√	√	√	√	√	√
TI01	Input	16-bit timer 01 input (8-bit mode available)	√	√	√	√	√	√
TI02	Input	16-bit timer 02 input	√	√	√	√	√	√
TI03	Input	16-bit timer 03 input (8-bit mode available)	√	√	√	√	√	√
TI04	Input	16-bit timer 04 input	√	√	√	√	√	√
TI05	Input	16-bit timer 05 input	√	√	√	√	√	√
TI06	Input	16-bit timer 06 input	√	√	√	√	√	√
TI07	Input	16-bit timer 07 input	√	√	√	√	√	√
TI10	Input	16-bit timer 10 input	√	√ Note 1	√ Note 1	—	—	—
<R> TI11	Input	16-bit timer 11 input (8-bit mode available)	√	√ Note 1	√ Note 1	—	—	—
TI12	Input	16-bit timer 12 input	√	√ Note 1	√ Note 1	—	—	—
<R> TI13	Input	16-bit timer 13 input (8-bit mode available)	√	√ Note 1	√ Note 1	—	—	—

Note 1. Provided only in the products with 96 Kbytes or 128 Kbytes of ROM.

Table 2-4. List of RL78/F13 (LIN incorporated) Pins Other than Port Pins (2/4)

Pin Function	I/O	Function	Pin Count					
			80-pin	64-pin	48-pin	32-pin	30-pin	20-pin
TO00	Output	16-bit timer 00 output	√	√	√	√	√	√
TO01	Output	16-bit timer 01 output (8-bit mode available)	√	√	√	√	√	√
TO02	Output	16-bit timer 02 output	√	√	√	√	√	√
TO03	Output	16-bit timer 03 output (8-bit mode available)	√	√	√	√	√	√
TO04	Output	16-bit timer 04 output	√	√	√	√	√	√
TO05	Output	16-bit timer 05 output	√	√	√	√	√	√
TO06	Output	16-bit timer 06 output	√	√	√	√	√	√
TO07	Output	16-bit timer 07 output	√	√	√	√	√	√
TO10	Output	16-bit timer 10 output	√	√ Note 1	√ Note 1	—	—	—
TO11	Output	16-bit timer 11 output (8-bit mode available)	√	√ Note 1	√ Note 1	—	—	—
TO12	Output	16-bit timer 12 output	√	√ Note 1	√ Note 1	—	—	—
TO13	Output	16-bit timer 13 output (8-bit mode available)	√	√ Note 1	√ Note 1	—	—	—
TRJIO0	I/O	Timer RJ input/output	√	√	√	√	√	—
TRJO0	Output	Timer RJ output	√	√	√	√	√	—
TRDCLK0	Input	Timer RD external clock input	√	√	√	√	√	√
TRDIOA0	I/O	Timer RD0 input/output	√	√	√	√	√	√
TRDIOB0	I/O		√	√	√	√	√	√
TRDIOC0	I/O		√	√	√	√	√	√
TRDIOD0	I/O		√	√	√	√	√	√
TRDIOA1	I/O	Timer RD1 input/output	√	√	√	√	√	√
TRDIOB1	I/O		√	√	√	√	√	√
TRDIOC1	I/O		√	√	√	√	√	√
TRDIOD1	I/O		√	√	√	√	√	√
RXD0	Input	Serial data input to UART0	√	√	√	√	√	√
RXD1	Input	Serial data input to UART1	√	√ Note 1	√ Note 1	—	—	—
TXD0	Output	Serial data output from UART0	√	√	√	√	√	√
TXD1	Output	Serial data output from UART1	√	√ Note 1	√ Note 1	—	—	—
SCLA0	I/O	Clock input/output for IICA0	√	√ Note 1	√ Note 1	—	—	—
SCL00	Output	Clock output from simplified I^2C	√	√	√	√	√	√
SCL01	Output		√	√	√	√	√	√
SCL10	Output		√	√ Note 1	√ Note 1	—	—	—
SCL11	Output		√	√ Note 1	√ Note 1	—	—	—
SDAA0	I/O	Serial data input/output for IICA0	√	√ Note 1	√ Note 1	—	—	—
SDA00	I/O	Serial data input/output for simplified I^2C	√	√	√	√	√	√
SDA01	I/O		√	√	√	√	√	√
SDA10	I/O		√	√ Note 1	√ Note 1	—	—	—
SDA11	I/O		√	√ Note 1	√ Note 1	—	—	—
$\overline{SCK00}$	I/O	Clock input/output for CSI00	√	√	√	√	√	√
$\overline{SCK01}$	I/O	Clock input/output for CSI01	√	√	√	√	√	√

Note 1. Provided only in the products with 96 Kbytes or 128 Kbytes of ROM.

Table 2-4. List of RL78/F13 (LIN incorporated) Pins Other than Port Pins (3/4)

Pin Function	I/O	Function	Pin Count					
			80-pin	64-pin	48-pin	32-pin	30-pin	20-pin
$\overline{\text{SCK10}}$	I/O	Clock input/output for CSI10	√	√ Note 1	√ Note 1	—	—	—
$\overline{\text{SCK11}}$	I/O	Clock input/output for CSI11	√	√ Note 1	√ Note 1	—	—	—
SI00	Input	Serial data input to CSI00	√	√	√	√	√	√
SI01	Input	Serial data input to CSI01	√	√	√	√	√	√
SI10	Input	Serial data input to CSI10	√	√ Note 1	√ Note 1	—	—	—
SI11	Input	Serial data input to CSI11	√	√ Note 1	√ Note 1	—	—	—
SO00	Output	Serial data output from CSI00	√	√	√	√	√	√
SO01	Output	Serial data output from CSI01	√	√	√	√	√	√
SO10	Output	Serial data output from CSI10	√	√ Note 1	√ Note 1	—	—	—
SO11	Output	Serial data output from CSI11	√	√ Note 1	√ Note 1	—	—	—
$\overline{\text{SSI00}}$	Input	Slave select input to CSI00 (SPI00)	√	√	√	√	√	√
$\overline{\text{SSI01}}$	Input	Slave select input to CSI01 (SPI01)	√	√	√	√	√	√
<R> $\overline{\text{SSI10}}$	Input	Slave select input to CSI10 (SPI10)	√	√ Note 1	—	—	—	—
$\overline{\text{SSI11}}$	Input	Slave select input to CSI11 (SPI11)	√	√ Note 1	√ Note 1	—	—	—
LRXD0	Input	Serial data input to LIN	√	√	√	√	√	√
LTXD0	Output	Serial data output from LIN	√	√	√	√	√	√
INTP0	Input	External interrupt input	√	√	√	√	√	√
INTP1	Input		√	√	√	√	√	√
INTP2	Input		√	√	√	√	√	√
INTP3	Input		√	√	√	√	√	√
INTP4	Input		√	√	√	√	√	√
INTP5	Input		√	√	√	√	√	—
INTP6	Input		√	√	√	—	—	—
INTP7	Input		√	√	√	—	—	—
INTP8	Input		√	√ Note 1	√ Note 1	—	—	—
INTP9	Input		√	√ Note 1	√ Note 1	—	—	—
INTP10	Input		√	√ Note 1	—	—	—	—
INTP11	Input		√	√ Note 1	—	—	—	—
PCLBUZ0	Output	Clock output/buzzer output 0	√	√	√	—	—	—
RESOUT	Output	Reset output	√	√	√	—	—	—
STOPST	Output	STOP status output	√	√	√	—	—	—
SNZOUT0	Output	SNOOZE status output	√	√	√	√	√	√
SNZOUT1	Output		√	√	√	√	√	√
SNZOUT2	Output		√	√	√	√	√	—
SNZOUT3	Output		√	√	√	√	√	—
SNZOUT4	Output		√	√	√	—	—	—
SNZOUT5	Output		√	√	√	—	—	—
SNZOUT6	Output		√	√	√	—	—	—
SNZOUT7	Output		√	√	√	—	—	—
RTC1HZ	Output	Real-time clock correction clock (1 Hz) output	√	√	√	√	√	√

Note 1. Provided only in the products with 96 Kbytes or 128 Kbytes of ROM.

Table 2-4. List of RL78/F13 (LIN incorporated) Pins Other than Port Pins (4/4)

Pin Function	I/O	Function	Pin Count					
			80-pin	64-pin	48-pin	32-pin	30-pin	20-pin
EXCLK	Input	External clock input for main system clock	√	√	√	√	√	√
EXCLKS	Input	External clock input for subsystem clock	√	√	√	—	—	—
X1	—	Resonator connection for main system clock	√	√	√	√	√	√
X2	—		√	√	√	√	√	√
XT1[Note]	—	Resonator connection for subsystem clock	√	√	√	—	—	—
XT2[Note]	—		√	√	√	—	—	—
$\overline{\text{RESET}}$	Input	External reset input	√	√	√	√	√	√
REGC	—	Regulator output stabilization capacitance connection for internal operation. Connect to Vss via the capacitor (0.47 to 1 μF).	√	√	√	√	√	√
V_{DD}	—	Positive power supply for the P33, P34, P80 to P87, P90 to P97, P100 to P105, P121 to P124, P137, and $\overline{\text{RESET}}$ pins	√	√	√	√	√	√
EV_{DD0}	—	Positive power supply for the pins that are not connected to V_{DD}	√	√	—	—	—	—
AV_{REFP}	Input	A/D converter reference voltage (+ side) input	√	√	√	√	√	√
AV_{REFM}	Input	A/D converter reference voltage (- side) input	√	√	√	√	√	√
V_{SS}	—	Ground potential for the P33, P34, P80 to P87, P90 to P97, P100 to P105, P121 to P124, P137, and $\overline{\text{RESET}}$ pins	√	√	√	√	√	√
EV_{SS0}	—	Ground potential for the pins that are not connected to V_{SS}	√	√	—	—	—	—
TOOLRXD	Input	UART reception pin for the external device connection used during flash memory programming	√	√	√	√	√	√
TOOLTXD	Output	UART transmission pin for the external device connection used during flash memory programming	√	√	√	√	√	√
TOOL0	I/O	Data input/output for flash memory programmer/debugger	√	√	√	√	√	√

Note Do not use the XT1 and XT2 pin functions in grade-Y products.

2.2 Description of Pin Functions

The pins provided depend on the product. See **1.5 Pin Configurations**, for details. This subchapter describes the pin functions of the 100-pin products of RL78/F14 and the 80-pin products of RL78/F13 (CAN and LIN incorporated) as examples.

2.2.1 P00 to P03 (Port 0)

P00 to P03 function as an I/O port. These pins also function as external interrupt request input, timer I/O, and real-time clock correction clock output. P03 is provided only in the 100-pin products of RL78/F14.

Use of an on-chip pull-up resistor can be specified by pull-up resistor option register 0 (PU0).

The following operation modes can be specified in 1-bit units.

(1) Port mode

P00 to P03 function as an I/O port. These pins can be set to input or output port in 1-bit units using port mode register 0 (PM0).

(2) Control mode

P00 to P03 function as external interrupt request input, real-time clock correction clock output, and timer I/O.

(a) INTP9

This is an external interrupt request input pin for which the valid edge (rising edge, falling edge, or both rising and falling edges) can be specified.

(b) RTC1HZ

This is a real-time clock correction clock (1 Hz) output pin.

(c) TI04 to TI06

These are pins for inputting an external count clock/capture trigger to 16-bit timers.

(d) TO04 to TO06

These are timer output pins of 16-bit timers.

2.2.2 P10 to P17 (Port 1)

P10 to P17 function as an I/O port. These pins also function as external interrupt request input, real-time clock correction clock output, serial interface data I/O, clock I/O, timer I/O, programming UART I/O, SNOOZE status output, LIN serial data I/O, and CAN serial data I/O.

Use of an on-chip pull-up resistor can be specified by pull-up resistor option register 1 (PU1).

For input to the P10, P11, P13, P14, P16, and P17 pins, a CMOS input buffer or a TTL input buffer can be selected using the port input mode register 1 (PIM1).

For output from the P10 to P17 pins, CMOS output or N-ch open-drain output can be selected using the port output mode register 1 (POM1).

For the P10, P11, P13, P14, P16, and P17 pins, the input threshold level can be specified using the port input threshold control register 1 (PITHL1).

The following operation modes can be specified in 1-bit units.

(1) Port mode

P10 to P17 function as an I/O port. These pins can be set to input or output port in 1-bit units using port mode register 1 (PM1).

(2) Control mode

P10 to P17 function as external interrupt request input, real-time clock correction clock output, serial interface data I/O, clock I/O, timer I/O, programming UART I/O, SNOOZE status output, LIN serial data I/O, and CAN serial data I/O.

(a) INTP3, INTP5

These are external interrupt request input pins for which the valid edge (rising edge, falling edge, or both rising and falling edges) can be specified.

(b) RTC1HZ

This is a real-time clock correction clock (1 Hz) output pin.

(c) TXD0, TXD1

These are serial data output pins of the UART0 and UART1 serial interface.

(d) RXD0, RXD1

These are serial data input pins of the UART0 and UART1 serial interface.

(e) $\overline{\text{SCK00}}$, $\overline{\text{SCK01}}$, $\overline{\text{SCK10}}$

These are serial clock I/O pins of the CSI00, CSI01, and CSI10 serial interface.

(f) SI00, SI01, SI10

These are serial data input pins of the CSI00, CSI01, and CSI10 serial interface.

(g) SO00, SO10

These are serial data output pins of the CSI00 and CSI10 serial interface.

(h) TI00, TI02, TI04 to TI06, TI11 to TI13

These are pins for inputting an external count clock/capture trigger to 16-bit timers.

(i) TO00, TO02, TO04 to TO06, TO11 to TO13

These are timer output pins of 16-bit timers.

(j) SDA00, SDA01, SDA10

These are serial data I/O pins of the simplified I^2C serial interface.

(k) SCL00, SCL01, SCL10

These are serial clock I/O pins of the simplified I^2C serial interface.

(l) TRDIOA0, TRDIOB0, TRDIOC0, TRDIOD0, TRDIOA1, TRDIOB1, TRDIOC1

These are timer I/O pins of timer RD.

(m) TRDCLK0

This is an external clock input pin of timer RD.

(n) TRJO0

This is a timer output pin of timer RJ.

(o) LTXD0, LTXD1

These are serial data output pins for the LIN. LTXD1 is provided only in the 100-pin products of RL78/F14.

(p) LRXD0, LRXD1

These are serial data input pins for the LIN. LRXD1 is provided only in the 100-pin products of RL78/F14.

(q) CTXD0

This is a serial data output pins for the CAN.

(r) CRXD0

This is a serial data input pins for the CAN.

(s) TOOLTXD

This is a UART serial data output pin for the external device connection used during flash memory programming.

(t) TOOLRXD

This is a UART serial data input pin for the external device connection used during flash memory programming.

(u) SNZOUT3

This is a SNOOZE status output pin.

2.2.3 P30 to P34 (Port 3)

P30 to P34 function as an I/O port. These pins also function as A/D converter analog input, A/D converter reference voltage input, external interrupt request input, serial interface slave select input, timer I/O, SNOOZE status output, and STOP status output.

Only for P30 to P32, use of an on-chip pull-up resistor can be specified by pull-up resistor option register 3 (PU3).

For input to the P30 pin, a CMOS input buffer or a TTL input buffer can be selected using the port input mode register 3 (PIM3).

For the P30 pin, the input threshold level can be specified using the port input threshold control register 3 (PITHL3).

The following operation modes can be specified in 1-bit units.

(1) Port mode

P30 to P34 function as an I/O port. These pins can be set to input or output port in 1-bit units using port mode register 3 (PM3).

(2) Control mode

P30 to P34 function as A/D converter analog input, A/D converter reference voltage input, external interrupt request input, serial interface slave select input, timer I/O, SNOOZE status output, and STOP status output.

(a) ANI0, ANI1

These are analog input pins of the A/D converter. For details, see **12.10 (5) Analog input (ANIn) pins**.

(b) AVREFP

This is a reference voltage (+ side) input pin of the A/D converter.

(c) AVREFM

This is a reference voltage (- side) input pin of the A/D converter.

(d) INTP2, INTP7

These are external interrupt request input pins for which the valid edge (rising edge, falling edge, or both rising and falling edges) can be specified.

(e) $\overline{\text{SSI00}}$

This is a slave select input pin of the CSI00 (SPI00) serial interface.

(f) TI01, TI14, TI16

These are pins for inputting an external count clock/capture trigger to 16-bit timers. TI14 and TI16 are provided only in the 100-pin products of RL78/F14.

(g) TO01, TO14, TO16

These are timer output pins of 16-bit timers. TO14 and TO16 are provided only in the 100-pin products of RL78/F14.

(h) SNZOUT0

This is a SNOOZE status output pin.

(i) TRDIOD1

This is a timer output pin of timer RD.

(j) STOPST

This is a STOP status output pin.

2.2.4 P40 to P47 (Port 4)

P40 to P47 function as an I/O port. These pins also function as data I/O for a flash memory programmer/debugger, timer I/O, comparator output, external interrupt request input, SNOOZE status output, and LIN serial data I/O.

Use of an on-chip pull-up resistor can be specified by pull-up resistor option register 4 (PU4).

For the P43 pin, the input threshold level can be specified using the port input threshold control register 4 (PITHL4).

The following operation modes can be specified in 1-bit units.

(1) Port mode

P40 to P47 function as an I/O port. These pins can be set to input or output port in 1-bit units using port mode register 4 (PM4).

(2) Control mode

P40 to P47 function as data I/O for a flash memory programmer/debugger, timer I/O, comparator output, external interrupt request input, SNOOZE status output, and LIN serial data I/O.

(a) TOOL0

This is a data I/O pin for a flash memory programmer/debugger.

Be sure to pull up this pin externally when on-chip debugging is enabled (pulling it down is prohibited).

(b) TI07, TI10, TI12

These are pins for inputting an external count clock/capture trigger to 16-bit timers.

(c) TO07, TO10, TO12

These are timer output pins of 16-bit timers.

(d) TRJIO0

This is a timer I/O pin of timer RJ.

(e) VCOUT0

This is a comparator output pin. This pin is provided only in the 100-pin products of RL78/F14.

(f) INTP13

This is an external interrupt request input pin for which the valid edge (rising edge, falling edge, or both rising and falling edges) can be specified. This pin is provided only in the 100-pin products of RL78/F14.

(g) SNZOUT2

This is a SNOOZE status output pin.

(h) LTXD0

This is a serial data output pin for the LIN.

(i) LRXD0

This is a serial data input pin for the LIN.

<R> **Caution After reset release, the relationships between P40/TOOL0 and the operating mode are as follows.**

Table 2-5. Relationships Between P40/TOOL0 and Operation Mode After Reset Release

P40/TOOL0	Operating Mode
EV_{DD}	Normal operation mode
0 V	Flash memory programming mode

<R> For details, see 30.4 Serial Programming Method.

2.2.5 P50 to P57 (Port 5)

P50 to P57 function as an I/O port. These pins also function as external interrupt request input, serial interface slave select input, serial interface data I/O, clock I/O, timer I/O, SNOOZE status output, and STOP status output.

Use of an on-chip pull-up resistor can be specified by pull-up resistor option register 5 (PU5).

For input to the P54 pin, a CMOS input buffer or a TTL input buffer can be selected using the port input mode register 5 (PIM5).

For the P50 and P52 to P54 pins, the input threshold level can be specified using the port input threshold control register 5 (PITHL5).

The following operation modes can be specified in 1-bit units.

(1) Port mode

P50 to P57 function as an I/O port. These pins can be set to input or output port in 1-bit units using port mode register 5 (PM5).

(2) Control mode

P50 to P57 function as external interrupt request input, serial interface slave select input, serial interface data I/O, clock I/O, timer I/O, SNOOZE status output, and STOP status output.

(a) INTP3, INTP10, INTP11

These are external interrupt request input pins for which the valid edge (rising edge, falling edge, or both rising and falling edges) can be specified.

<R> **(b) $\overline{\text{SSI01}}$**

This is a slave select pin of the CSI01 (SPI01) serial interface.

(c) $\overline{\text{SSI10}}$

This is a slave select pin of the CSI10 (SPI10) serial interface.

<R> **(d) $\overline{\text{SCK01}}$**

This is a serial clock I/O pin of the CSI01 serial interface.

(e) SI01

This is a serial data input pin of the CSI01 serial interface.

(f) SO01

This is a serial data output pin of the CSI01 serial interface.

(g) TI11, TI13, TI15, TI17

These are pins for inputting an external count clock/capture trigger to 16-bit timers.

<R> TI15 and TI17 are provided only in the 100-pin products of RL78/F14.

(h) TO11, TO13, TO15, TO17

<R> These are timer output pins of 16-bit timers. TO15 and TO17 are provided only in the Group E products of RL78/F14.

(i) SNZOUT0, SNZOUT1

These are SNOOZE status output pins.

(j) STOPST

This is a STOP status output pin.

2.2.6 P60 to P67 (Port 6)

P60 to P67 function as an I/O port. These pins also function as serial interface data I/O, clock I/O, slave select input, timer I/O, and SNOOZE status output.

Use of an on-chip pull-up resistor can be specified by pull-up resistor option register 6 (PU6).

For input to the P62 and P63 pins, a CMOS input buffer or a TTL input buffer can be selected using the port input mode register 6 (PIM6).

For output from the P60 to P63 pins, CMOS output or N-ch open-drain output can be selected using the port output mode register 6 (POM6).

For the P60 to P63 pins, the input threshold level can be specified using the port input threshold control register 6 (PITHL6).

The following operation modes can be specified in 1-bit units.

(1) Port mode

P60 to P67 function as an I/O port. These pins can be set to input or output port in 1-bit units using port mode register 6 (PM6).

(2) Control mode

P60 to P67 function as serial interface data I/O, clock I/O, slave select input, timer I/O, and SNOOZE status output.

(a) SCLA0

This is a serial clock I/O pin of the IICA0 serial interface.

(b) SDAA0

This is a serial data I/O pin of the IICA0 serial interface.

<R> **(C) $\overline{\text{SSI00}}$**

This is a slave select input pin of the CSI00 (SPI00) serial interface.

<R> **(d) $\overline{\text{SCK00}}$**

This is a serial clock I/O pin of the CSI00 serial interface.

(e) SI00

This is a serial data input pin of the CSI00 serial interface.

(f) SO00

This is a serial data output pin of the CSI00 serial interface.

(g) TXD0

This is a serial data output pin of the UART0 serial interface.

(h) RXD0

This is a serial data input pin of the UART0 serial interface.

(i) SCL00

This is a serial clock I/O pin of the simplified I^2C serial interface.

(j) SDA00

This is a serial data I/O pin of the simplified I^2C serial interface.

(k) TI00, TI02, TI14, TI16

These are pins for inputting an external count clock/capture trigger to 16-bit timers. TI14 and TI16 are provided only in 100-pin products of RL78/F14.

(l) TO00, TO02, TO14, TO16

These are timer output pins of 16-bit timers. TO14 and TO16 are provided only in 100-pin products of RL78/F14.

(m) SNZOUT2, SNZOUT3

These are SNOOZE status output pins.

2.2.7 P70 to P77 (Port 7)

P70 to P77 function as an I/O port. These pins also function as A/D converter analog input, external interrupt request input, key interrupt input, serial interface slave select input, data I/O, clock I/O, timer I/O, SNOOZE status output, and CAN serial data I/O.

Use of an on-chip pull-up resistor can be specified by pull-up resistor option register 7 (PU7).

For input to the P70, P71, and P73 pins, a CMOS input buffer or a TTL input buffer can be selected using the port input mode register 7 (PIM7).

For output from the P70 to P72 pins, CMOS output or N-ch open-drain output can be selected using the port output mode register 7 (POM7).

For the P70, P71, P73, and P75 to P77 pins, the input threshold level can be specified using the port input threshold control register 7 (PITHL7).

Input to the P70 to P74 pins can be specified as digital input or analog input in 1-bit units, using the port mode control register 7 (PMC7).

The following operation modes can be specified in 1-bit units.

(1) Port mode

P70 to P77 function as an I/O port. These pins can be set to input or output port in 1-bit units using port mode register 7 (PM7).

(2) Control mode

P70 to P77 function as A/D converter analog input, external interrupt request input, key interrupt input, serial interface slave select input, data I/O, clock I/O, timer I/O, SNOOZE status output, and CAN serial data I/O.

(a) ANI26 to ANI30

These are analog input pins of the A/D converter. These pins are provided only in the 100-pin products of RL78/F14. For details, see **12.10 (5) Analog input (ANIn) pins**.

(b) INTP6, INTP8, INTP12

These are external interrupt request input pins for which the valid edge (rising edge, falling edge, or both rising and falling edges) can be specified. INTP12 is provided only in the 100-pin products of RL78/F14.

(c) KR0 to KR7

These are key interrupt input pins.

(d) SSI10, SSI11

These are slave select input pins of the CSI10 (SPI10) and CSI11 (SPI11) serial interface.

(e) SI10, SI11

These are serial data input pins of the CSI10 and CSI11 serial interface.

(f) SO10, SO11

These are serial data output pins of the CSI10 and CSI11 serial interface.

(g) TXD1

This is a serial data output pin of the UART1 serial interface.

(h) RXD1

This is a serial data input pin of the UART1 serial interface.

<R> **(i) $\overline{\text{SCK10}}$, $\overline{\text{SCK11}}$**

These are serial clock I/O pins of the CSI10 and CSI11 serial interface.

(j) SCL11

This is a serial clock I/O pin of the simplified I^2C serial interface.

(k) SDA11

This is a serial data I/O pin of the simplified I^2C serial interface.

(l) TI15, TI17

These are pins for inputting an external count clock/capture trigger to 16-bit timers. They are provided only in the 100-pin products of RL78/F14.

(m) TO15, TO17

<R> These are timer output pins of 16-bit timers. They are provided only in the Group E products of RL78/F14.

(n) CTXD0

This is a serial data output pin for the CAN.

(o) CRXD0

This is a serial data input pin for the CAN.

(p) SNZOUT4 to SNZOUT7

These are SNOOZE status output pins.

2.2.8 P80 to P87 (Port 8)

P80 to P87 function as an I/O port. These pins also function as A/D converter analog input, D/A converter output, comparator reference voltage input, and comparator analog voltage input.

(1) Port mode

P80 to P87 function as an I/O port. These pins can be set to input or output port in 1-bit units using port mode register 8 (PM8).

(2) Control mode

P80 to P87 function as A/D converter analog input, D/A converter output, comparator reference voltage input, and comparator analog voltage input.

(a) ANI2 to ANI9

These are analog input pins of the A/D converter. For details, see **12.10 (5) Analog input (ANIn) pins**.

(b) ANO0

This is a D/A converter output pin. It is provided only in the 100-pin products of RL78/F14.

(c) IVCMP00 to IVCMP03

These are analog voltage input pins of the comparator. It is provided only in the 100-pin products of RL78/F14.

(d) IVREF0

This is a reference voltage input pin of the comparator. It is provided only in the 100-pin products of RL78/F14.

2.2.9 P90 to P97 (Port 9)

P90 to P97 function as an I/O port. These pins also function as A/D converter analog input.

The following operation modes can be specified in 1-bit units.

(1) Port mode

P90 to P97 function as an I/O port. These pins can be set to input or output port in 1-bit units using port mode register 9 (PM9).

(2) Control mode

P90 to P97 function as A/D converter analog input.

(a) ANI10 to ANI17 (100-pin products of RL78/F14)

These are analog input pins of the A/D converter. For details, see **12.10 (5) Analog input (ANIn) pins**.

(b) ANI10 to ANI15, ANI26, ANI27 (80-pin products of RL78/F13 (CAN and LIN incorporated))

These are analog input pins of the A/D converter. For details, see **12.10 (5) Analog input (ANIn) pins**.

2.2.10 P100 to P107 (Port 10)

P100 to P107 function as an I/O port. These pins are provided only in the 100-pin products of RL78/F14. These pins also function as A/D converter analog input and LIN serial data I/O.

For P106 and P107, use of an on-chip pull-up resistor can be specified by pull-up resistor option register 10 (PU10).

For the P107 pin, the input threshold level can be specified using the port input threshold control register 10 (PITHL10).

The following operation modes can be specified in 1-bit units.

(1) Port mode

P100 to P107 function as an I/O port. These pins can be set to input or output port in 1-bit units using port mode register 10 (PM10).

(2) Control mode

P100 to P107 function as A/D converter analog input and LIN serial data I/O.

(a) ANI18 to ANI23

These are analog input pins of the A/D converter. For details, see **12.10 (5) Analog input (ANIn) pins**.

(b) LTXD1

<R> This is a serial data output pin for the LIN. LTXD1 is provided only in the 100-pin products of RL78/F14.

(c) LRXD1

<R> This is a serial data input pin for the LIN. LRXD1 is provided only in the 100-pin products of RL78/F14.

2.2.11 P120 to P127 (Port 12)

The 100-pin products of RL78/F14 has P120 and P125 to P127 I/O port pins, and the 80-pin products of RL78/F13 (CAN and LIN incorporated) has P120, P125, and P126 I/O port pins. P121 to P124 are input port pins and provided in both products. These pins also function as A/D converter analog input, external interrupt request input, resonator connection for the main system clock, resonator connection for the subsystem clock, external clock input for the main system clock, external clock input for the subsystem clock, serial interface slave select input, serial interface data output, timer I/O, and SNOOZE status output.

Only for the P120 and P125 to P127 pins, use of an on-chip pull-up resistor can be specified by pull-up resistor option register 12 (PU12).

For input to the P125 pin, a CMOS input buffer or a TTL input buffer can be selected using the port input mode register 12 (PIM12).

For output from the P120 pin, CMOS output or N-ch open-drain output can be selected using the port output mode register 12 (POM12).

For the P125 pin, the input threshold level can be specified using the port input threshold control register 12 (PITHL12).

Input to the P120 and P125 pins can be specified as digital I/O or analog input in 1-bit units, using port mode control register 12 (PMC12).

The following operation modes can be specified in 1-bit units.

(1) Port mode

P120 and P125 to P127 function as I/O port pins. These pins can be set to input or output port using port mode register 12 (PM12).

P121 to P124 function as input port pins.

(2) Control mode

P120 to P127 function as A/D converter analog input, external interrupt request input, resonator connection for the main system clock, resonator connection for the subsystem clock, external clock input for the main system clock, external clock input for the subsystem clock, serial interface slave select input, serial interface data output, timer I/O, and SNOOZE status output.

(a) ANI24, ANI25

These are analog input pins of the A/D converter. For details, see **12.10 (5) Analog input (ANIn) pins**.

(b) INTP1, INTP4

These are external interrupt request input pins for which the valid edge (rising edge, falling edge, or both rising and falling edges) can be specified.

(c) X1, X2

These are resonator connection pins for the main system clock.

(d) EXCLK

This is an external clock input pin for the main system clock.

(e) XT1, XT2

These are resonator connection pins for the subsystem clock.

(f) EXCLKS

This is an external clock input pin for the subsystem clock.

(g) $\overline{\text{SSI01}}$

This is a slave select input pin of the CSI01 (SPI01) serial interface.

(h) SO01

This is a serial data output pin of the CSI01 serial interface.

(i) TI01, TI03, TI07

These are pins for inputting an external count clock/capture trigger to 16-bit timers.

(j) TO01, TO03, TO07

These are timer output pins of 16-bit timers.

(k) SNZOUT1

This is a SNOOZE status output pin.

(l) TRDIOB0, TRDIOD0

These are timer I/O pins of timer RD.

2.2.12 P130, P137 (Port 13)

P130 functions as an output port. P137 functions as an input port. These pins also function as external interrupt request input and reset output.

(1) Port mode

P130 functions as an output port. P137 functions as an input port.

(2) Control mode

P130 and P137 function as external interrupt request input and reset output.

(a) INTP0

This is an external interrupt request input pin for which the valid edge (rising edge, falling edge, or both rising and falling edges) can be specified.

(b) RESOUT

This is a reset output pin.

2.2.13 P140 (Port 14)

P140 functions as an I/O port. This pin also functions as clock/buzzer output.

Use of an on-chip pull-up resistor can be specified by pull-up resistor option register 14 (PU14).

The following operation modes can be specified in 1-bit units.

(1) Port mode

P140 functions as an I/O port. This pin can be set to input or output port in 1-bit units using port mode register 14 (PM14).

(2) Control mode

P140 functions as clock/buzzer output.

(a) PCLBUZ0

This is a clock/buzzer output pin.

2.2.14 P150 to P157 (Port 15)

P150 to P157 function as an I/O port. These pins also function as serial interface data I/O, clock I/O, timer I/O, slave select input, and SNOOZE status output. These pins are provided only in the 100-pin products of RL78/F14.

Use of an on-chip pull-up resistor can be specified by pull-up resistor option register 15 (PU15).

For the P150, P152, and P153 pins, the input threshold level can be specified using the port input threshold control register 15 (PITHL15).

(1) Port mode

P150 to P157 function as an I/O port. These pins can be set to input or output port in 1-bit units using port mode register 15 (PM15).

(2) Control mode

P150 to P157 function as serial interface slave select input, data I/O, clock I/O, and SNOOZE status output.

<R> **(a) $\overline{\text{SSI11}}$**

This is a slave select input pin of the CSI11 (SPI11) serial interface.

(b) SI11

This is a serial data input pin of the CSI11 serial interface.

(c) SO11

This is a serial data output pin of the CSI11 serial interface.

<R> **(d) $\overline{\text{SCK11}}$**

This is a serial clock I/O pin of the CSI11 serial interface.

(e) SNZOUT4 to SNZOUT7

These are SNOOZE status output pins.

2.2.15 V_{DD}, EV_{DD0}, EV_{DD1}, V_{SS}, EV_{SS0}, EV_{SS1}

(1) V_{DD}, EV_{DD0}, EV_{DD1}

V_{DD} is a positive power supply pin for the P33, P34, P80 to P87, P90 to P97 Note, P100 to P105, P121 to P124, P137 and the pins other than ports.

EV_{DD0} and EV_{DD1} are positive power supply pins for ports other than P33, P34, P80 to P87, P90 to P97 Note, P100 to P105, P121 to P124, and P137. EV_{DD1} is provided only in the 100-pin products of RL78/F14.

Note In products with 48 or fewer pins, V_{DD} is the positive power supply pin for all port pins.
In products with 64 or more pins, V_{DD} and EV_{DD0} are the positive power supply pins for P92 to P95 of products of groups B to E and of group A, respectively.
In products with 64 or more pins, V_{DD} and EV_{DD0} are the positive power supply pins for P96 and P97 of products of group E and of groups A to D, respectively.

(2) V_{SS}, EV_{SS0}, EV_{SS1}

V_{SS} is a ground potential pin for P33, P34, P80 to P87, P90 to P97 Note, P100 to P105, P121 to P124, P137 and the pins other than ports.

EV_{SS0} and EV_{SS1} are ground potential pins for ports other than P33, P34, P80 to P87, P90 to P97 Note, P100 to P105, P121 to P124, and P137. EV_{SS1} is provided only in the 100-pin products of RL78/F14.

Note In products with 48 or fewer pins, V_{SS} is the ground potential pin for all port pins.
In products with 64 or more pins, Vss and $EVss_0$ are the ground potential pins for P92 to P95 of products of groups B to E and of group A, respectively.
In products with 64 or more pins, Vss and $EVss_0$ are the ground potential pins for P96 and P97 of products of group E and of groups A to D, respectively.

Remark Use bypass capacitors (about 0.1 μF) as noise and latch-up countermeasures with relatively thick wires at the shortest distance to V_{DD} to V_{SS}, EV_{DD0} to EV_{SS0} and EV_{DD1} to EV_{SS1} lines.

2.2.16 $\overline{\text{RESET}}$

This is an active-low system reset input pin.
When the external reset pin is not used, connect this pin directly or via a resistor to V_{DD}.
When the external reset pin is used, design the circuit based on V_{DD}.

2.2.17 REGC

This is the pin for connecting regulator output stabilization capacitance for internal operation. Connect this pin to V_{SS} via a capacitor (0.47 to 1 μF).

Use a capacitor with good characteristics because it is used to stabilize internal voltage.

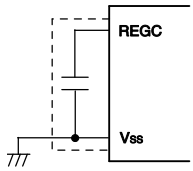

Caution Keep the wiring length as short as possible for the broken-line part in the above figure.

2.3 Recommended Connection of Unused Pins

Tables 2-6 and 2-7 show the recommended connections of unused pins taking the 100-pin products of RL78/F14 and the 80-pin products of RL78/F13 (CAN and LIN incorporated) as examples.

Table 2-6. Connection of Unused Pins (100-Pin Products of RL78/F14) (1/3)

Pin Name	I/O	Recommended Connection of Unused Pins
P00/(TI05)/(TO05)/INTP9	I/O	Input: Independently connect to EV_{DD0} and EV_{DD1}, or EV_{SS0} and EV_{SS1} via a resistor. Output: Leave open.
P01/(TI04)/(TO04)		
P02/(TI06)/(TO06)		
P03/(RTC1HZ)		
P10/TI13/TO13/TRJO0/$\overline{\text{SCK10}}$/SCL10/LTXD1/CTXD0		
P11/TI12/TO12/(TRDIOB0)/SI10/SDA10/RXD1/LRXD1/CRXD0		
P12/TI11/TO11/(TRDIOD0)/INTP5/SO10/TXD1/SNZOUT3		
P13/TI04/TO04/TRDIOA0/TRDCLK0/SI01/SDA01/LTXD0		
P14/TI06/TO06/TRDIOC0/$\overline{\text{SCK01}}$/SCL01/LRXD0		
P15/TI05/TO05/TRDIOA1/(TRDIOA0)/(TRDCLK0)/SO00/TXD0/TOOLTXD/RTC1HZ		
P16/TI02/TO02/TRDIOC1/SI00/SDA00/RXD0/TOOLRXD		
P17/TI00/TO00/TRDIOB1/$\overline{\text{SCK00}}$/SCL00/INTP3		
P30/TI01/TO01/TRDIOD1/$\overline{\text{SSI00}}$/INTP2/SNZOUT0		
P31/TI14/TO14/STOPST/(INTP2)		
P32/TI16/TO16/INTP7		
P33/AV_{REFP}/ANI0		Input: Independently connect to V_{DD} or V_{SS} via a resistor. Output: Leave open.
P34/AV_{REFM}/ANI1		
<R> P40/TOOL0		Input: Independently connect to EV_{DD0} and EV_{DD1} via a resistor or leave open. Output: Leave open.
P41/TI10/TO10/TRJIO0/VCOUT0/SNZOUT2		Input: Independently connect to EV_{DD0} and EV_{DD1}, or EV_{SS0} and EV_{SS1} via a resistor. Output: Leave open.
P42/(LTXD0)		
P43/(LRXD0)		
P44/(TI07)/(TO07)		
P45/(TI10)/(TO10)		
P46/(TI12)/(TO12)		
P47/INTP13		

Remark Functions in parentheses in the above table can be assigned via settings in the peripheral I/O redirection registers (PIOR).

Table 2-6. Connection of Unused Pins (100-Pin Products of RL78/F14) (2/3)

Pin Name	I/O	Recommended Connection of Unused Pins
P50/($\overline{\text{SSI01}}$)/(INTP3)	I/O	Input: Independently connect to EV_{DD0} and EV_{DD1}, or EV_{SS0} and EV_{SS1} via a resistor. Output: Leave open.
P51/(SO01)/INTP11		
P52/($\overline{\text{SCK01}}$)/(STOPST)		
P53/(SI01)/INTP10		
P54/(TI11)/(TO11)/$\overline{\text{SSI10}}$		
P55/(TI13)/(TO13)		
P56/(TI15)/(TO15)/(SNZOUT1)		
P57/(TI17)/(TO17)/(SNZOUT0)		
P60/($\overline{\text{SCK00}}$)/(SCL00)		
P61/(SI00)/(SDA00)/(RXD0)		
P62/(SO00)/(TXD0)/SCLA0		
P63/($\overline{\text{SSI00}}$)/SDAA0		
P64/(TI14)/(TO14)/(SNZOUT3)		
P65/(TI16)/(TO16)/(SNZOUT2)		
P66/(TI00)/(TO00)		
P67/(TI02)/(TO02)		
P70/ANI26/KR0/TI15/TO15/INTP8/ SI11/SDA11/SNZOUT4		
P71/ANI27/KR1/TI17/TO17/INTP6/ $\overline{\text{SCK11}}$/SCL11/SNZOUT5		
P72/ANI28/KR2/(CTXD0)/SO11/SNZOUT6		
P73/ANI29/KR3/(CRXD0)/$\overline{\text{SSI11}}$/ SNZOUT7		
P74/ANI30/KR4/(SO10)/(TXD1)		
P75/KR5/(SI10)/(RXD1)		
P76/KR6/($\overline{\text{SCK10}}$)		
P77/KR7/($\overline{\text{SSI10}}$)/INTP12		
P80/ANI2/ANO0		Input: Independently connect to V_{DD} or V_{SS} via a resistor. Output: Leave open.
P81/ANI3/IVCMP00		
P82/ANI4/IVCMP01		
P83/ANI5/IVCMP02		
P84/ANI6/IVCMP03		
P85/ANI7/IVREF0		
P86/ANI8		
P87/ANI9		
P90/ANI10		
P91/ANI11		
P92/ANI12		
P93/ANI13		
P94/ANI14		
P95/ANI15		
P96/ANI16		
P97/ANI17		

Remark Functions in parentheses in the above table can be assigned via settings in the peripheral I/O redirection registers (PIOR).

Table 2-6. Connection of Unused Pins (100-Pin Products of RL78/F14) (3/3)

Pin Name	I/O	Recommended Connection of Unused Pins
P100/ANI18	I/O	Input: Independently connect to V_{DD} or V_{SS} via a resistor. Output: Leave open.
P101/ANI19		
P102/ANI20		
P103/ANI21		
P104/ANI22		
P105/ANI23		
P106/(LTXD1)		Input: Independently connect to EV_{DD0} and EV_{DD1}, or EV_{SS0} and EV_{SS1} via a resistor. Output: Leave open.
P107/(LRXD1)		
P120/ANI25/TI07/TO07/TRDIOD0/SO01/INTP4		
P121/X1	Input	Independently connect to V_{DD} or V_{SS} via a resistor.
P122/X2/EXCLK		
P123/XT1		
P124/XT2/EXCLKS		
P125/ANI24/TI03/TO03/TRDIOB0/$\overline{\text{SSI01}}$/INTP1/SNZOUT1	I/O	Input: Independently connect to EV_{DD0} and EV_{DD1}, or EV_{SS0} and EV_{SS1} via a resistor. Output: Leave open.
P126/(TI01)/(TO01)		
P127/(TI03)/(TO03)		
P130/RESOUT	Output	Leave open.
P137/INTP0	Input	Independently connect to V_{DD} or V_{SS} via a resistor.
P140/PCLBUZ0	I/O	Input: Independently connect to EV_{DD0} and EV_{DD1}, or EV_{SS0} and EV_{SS1} via a resistor. Output: Leave open.
P150/($\overline{\text{SSI11}}$)		
P151/(SO11)		
P152/(SI11)		
P153/($\overline{\text{SCK11}}$)		
P154/(SNZOUT7)		
P155/(SNZOUT6)		
P156/(SNZOUT5)		
P157/(SNZOUT4)		
$\overline{\text{RESET}}$	Input	Connect to V_{DD} directly or via a resistor.
REGC	—	Connect to V_{SS} via a capacitor (0.47 to 1 μF).

Remark Functions in parentheses in the above table can be assigned via settings in the peripheral I/O redirection registers (PIOR).

Table 2-7. Connection of Unused Pins (80-Pin Products of RL78/F13 (CAN and LIN incorporated)) (1/3)

Pin Name	I/O	Recommended Connection of Unused Pins
P00/(TI05)/(TO05)/INTP9	I/O	Input: Independently connect to EV_{DD0} or EV_{SS0} via a resistor. Output: Leave open.
P01/(TI04)/(TO04)		
P02/(TI06)/(TO06)		
P10/TI13/TO13/TRJO0/$\overline{SCK10}$/SCL10/ CTXD0		
P11/TI12/TO12/(TRDIOB0)/SI10/SDA10/ RXD1/CRXD0		
P12/TI11/TO11/(TRDIOD0)/INTP5/SO10/ TXD1/SNZOUT3		
P13/TI04/TO04/TRDIOA0/TRDCLK0/SI01/ SDA01/LTXD0		
P14/TI06/TO06/TRDIOC0/$\overline{SCK01}$/SCL01/ LRXD0		
P15/TI05/TO05/TRDIOA1/(TRDIOA0)/ (TRDCLK0)/SO00/TXD0/TOOLTXD/ RTC1HZ		
P16/TI02/TO02/TRDIOC1/SI00/SDA00/ RXD0/TOOLRXD		
P17/TI00/TO00/TRDIOB1/$\overline{SCK00}$/SCL00/ INTP3		
P30/TI01/TO01/TRDIOD1/$\overline{SSI00}$/INTP2/ SNZOUT0		
P31/STOPST/(INTP2)		
P32/INTP7		
P33/AV_{REFP}/ANI0		Input: Independently connect to V_{DD} or V_{SS} via a resistor. Output: Leave open.
P34/AV_{REFM}/ANI1		
<R> P40/TOOL0		Input: Independently connect to EV_{DD0} via a resistor or leave open. Output: Leave open.
P41/TI10/TO10/TRJIO0/SNZOUT2		Input: Independently connect to EV_{DD0} or EV_{SS0} via a resistor. Output: Leave open.
P42/(LTXD0)		
P43/(LRXD0)		
P44/(TI07)/(TO07)		
P45/(TI10)/(TO10)		
P46/(TI12)/(TO12)		
P47		

Remark Functions in parentheses in the above table can be assigned via settings in the peripheral I/O redirection registers (PIOR).

Table 2-7. Connection of Unused Pins (80-Pin Products of RL78/F13 (CAN and LIN incorporated)) (2/3)

Pin Name	I/O	Recommended Connection of Unused Pins
P50/($\overline{\text{SSI01}}$)/(INTP3)	I/O	Input: Independently connect to EV_{DD0} or EV_{SS0} via a resistor. Output: Leave open.
P51/(SO01)/INTP11		
P52/($\overline{\text{SCK01}}$)/(STOPST)		
P53/(SI01)/INTP10		
P54/(TI11)/(TO11)/$\overline{\text{SSI10}}$		
P55/(TI13)/(TO13)		
P56/(SNZOUT1)		
P57/(SNZOUT0)		
P60/($\overline{\text{SCK00}}$)/(SCL00)		
P61/(SI00)/(SDA00)/(RXD0)		
P62/(SO00)/(TXD0)/SCLA0		
P63/($\overline{\text{SSI00}}$)/SDAA0		
P64/(SNZOUT3)		
P65/(SNZOUT2)		
P66/(TI00)/(TO00)		
P67/(TI02)/(TO02)		
P70/KR0/INTP8/SI11/SDA11/SNZOUT4		
P71/KR1/INTP6/$\overline{\text{SCK11}}$/SCL11/SNZOUT5		
P72/KR2/(CTXD0)/SO11/SNZOUT6		
P73/KR3/(CRXD0)/$\overline{\text{SSI11}}$/SNZOUT7		
P74/KR4/(SO10)/(TXD1)		
P75/KR5/(SI10)/(RXD1)		
P76/KR6/($\overline{\text{SCK10}}$)		
P77/KR7/($\overline{\text{SSI10}}$)		
P80/ANI2		Input: Independently connect to V_{DD} or V_{SS} via a resistor. Output: Leave open.
P81/ANI3		
P82/ANI4		
P83/ANI5		
P84/ANI6		
P85/ANI7		
P86/ANI8		
P87/ANI9		
P90/ANI10		
P91/ANI11		
P92/ANI12		
P93/ANI13		
P94/ANI14		
P95/ANI15		
P96/ANI26		Input: Independently connect to EV_{DD0} or EV_{SS0} via a resistor. Output: Leave open.
P97/ANI27		
P120/ANI25/TI07/TO07/TRDIOD0/SO01/INTP4		

Remark Functions in parentheses in the above table can be assigned via settings in the peripheral I/O redirection registers (PIOR).

<R> **Table 2-7. Connection of Unused Pins (80-Pin Products of RL78/F13 (CAN and LIN incorporated)) (3/3)**

Pin Name	I/O	Recommended Connection of Unused Pins
P121/X1	Input	Independently connect to V_{DD} or V_{SS} via a resistor.
P122/X2/EXCLK		
P123/XT1		
P124/XT2/EXCLKS		
P125/ANI24/TI03/TO03/TRDIOB0/$\overline{\text{SSI01}}$/INTP1/SNZOUT1	I/O	Input: Independently connect to EV_{DD0} or EV_{SS0} via a resistor. Output: Leave open.
P126/(TI01)/(TO01)		
P130/RESOUT	Output	Leave open.
P137/INTP0	Input	Independently connect to V_{DD} or V_{SS} via a resistor.
P140/PCLBUZ0	I/O	Input: Independently connect to EV_{DD0} or EV_{SS0} via a resistor. Output: Leave open.
$\overline{\text{RESET}}$	Input	Connect to V_{DD} directly or via a resistor.
REGC	—	Connect to V_{SS} via a capacitor (0.47 to 1 μF).

Remark Functions in parentheses in the above table can be assigned via settings in the peripheral I/O redirection registers (PIOR).

<R>

CHAPTER 3 CPU ARCHITECTURE

3.1 Memory Space

Products in the RL78/F13 and RL78/F14 can access a 1 MB memory space. Figures 3-1 to 3-17 show the memory maps.

Figure 3-1. Memory Map (R5F10AmA (m = 6, A, B, G))

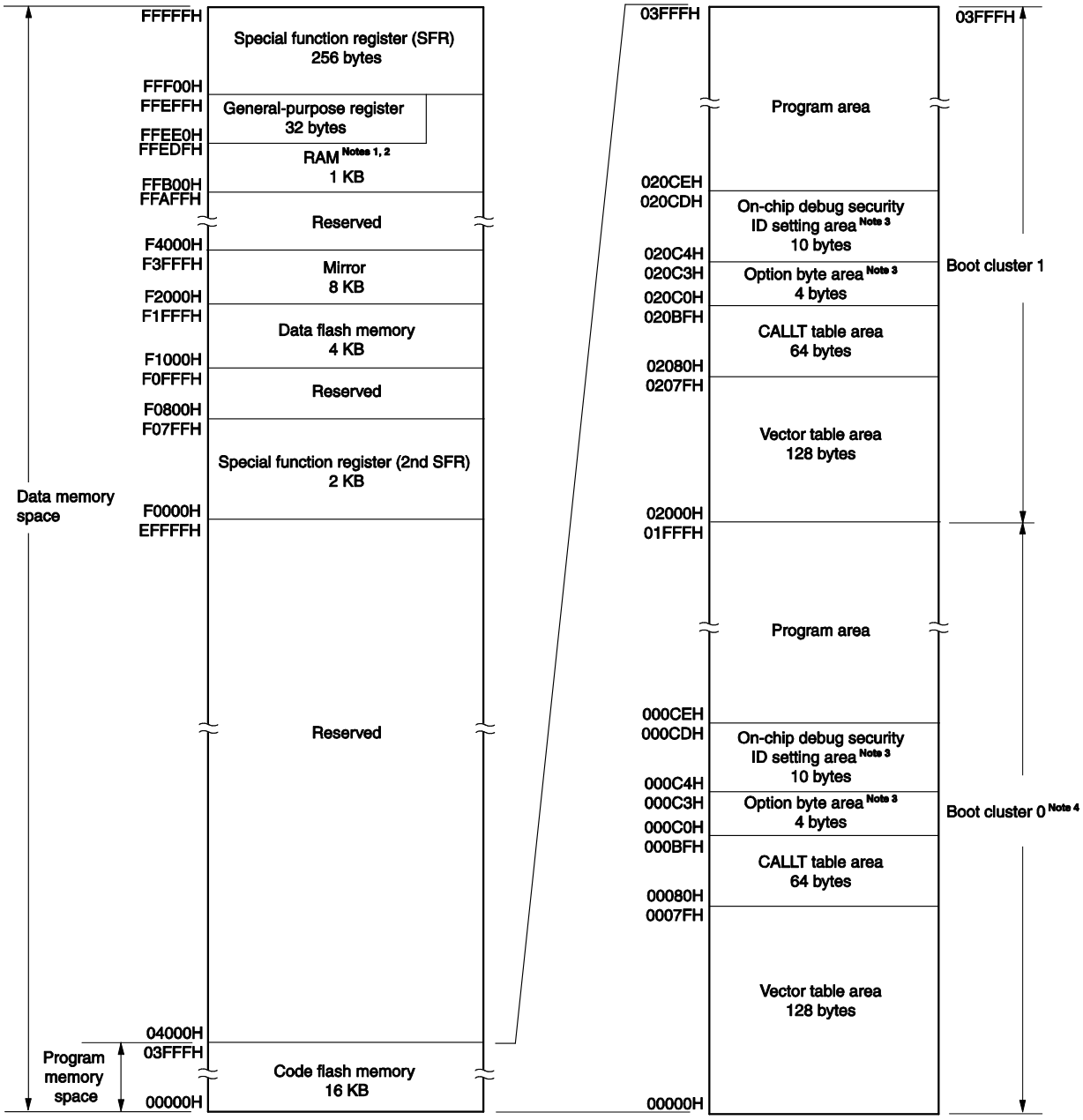

Notes 1. Do not allocate RAM addresses which are used as stack area, data buffers used by the libraries, branch destinations for vectored interrupt servicing, or DTC transfer destinations/transfer sources to the area FFE20H to FFEDFH when performing self-programming and rewriting the data flash memory.

2. Instructions can be executed from the RAM area excluding the general-purpose register area.

3. When boot swap is not used: Set the option bytes to 000C0H to 000C3H, and the on-chip debug security IDs to 000C4H to 000CDH.

When boot swap is used: Set the option bytes to 000C0H to 000C3H and 020C0H to 020C3H, and the on-chip debug security IDs to 000C4H to 000CDH and 020C4H to 020CDH.

<R> **4.** Writing boot cluster 0 can be prohibited depending on the setting of security (see **30.7 Security Settings**).

Caution When executing instructions from the RAM area, be sure to initialize the used RAM area + 10 bytes with any desired value.

Figure 3-2. Memory Map (R5F10AmC (m = 6, A, B, G, L))

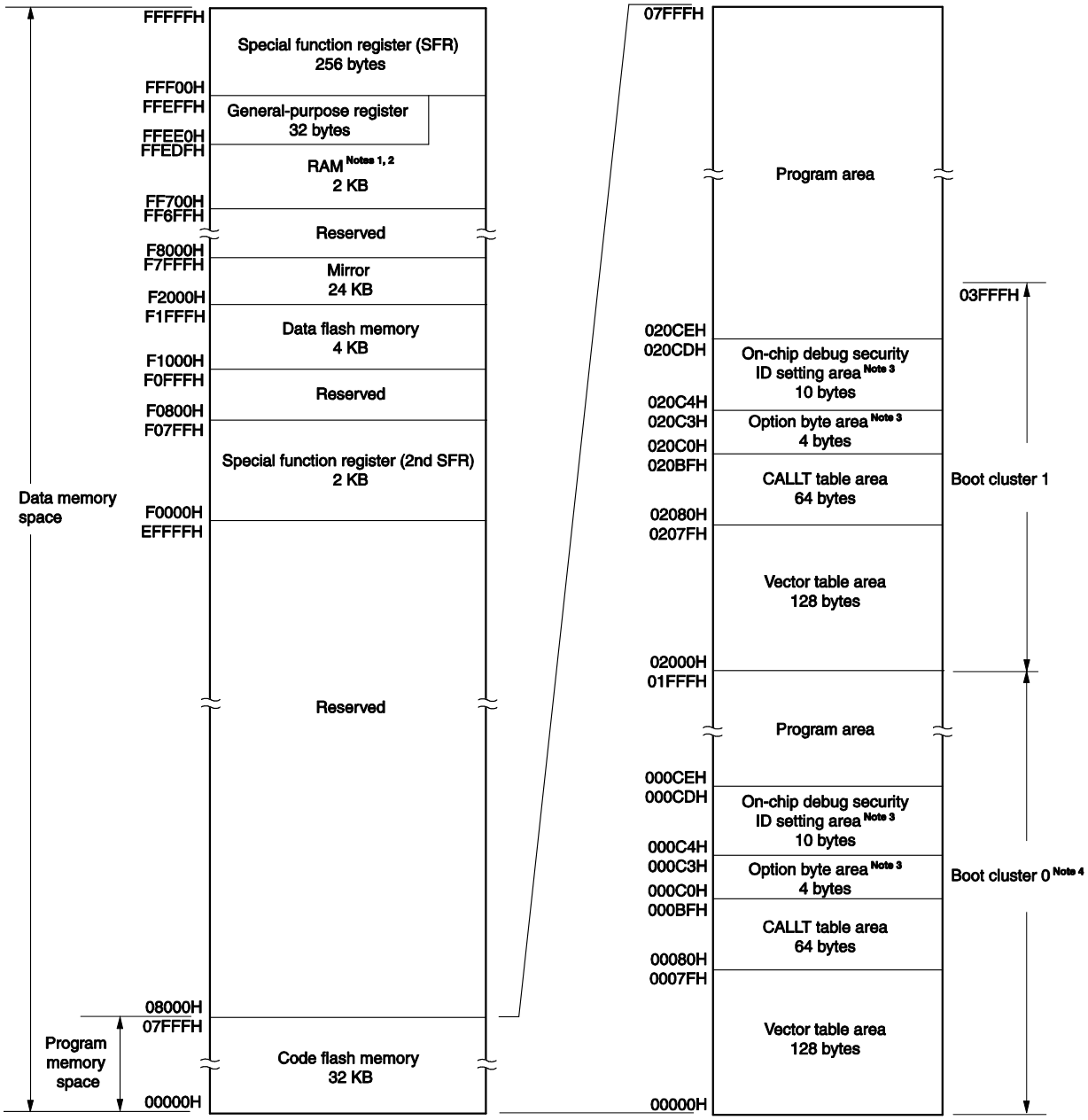

Notes 1. Do not allocate RAM addresses which are used as stack area, data buffers used by the libraries, branch destinations for vectored interrupt servicing, or DTC transfer destinations/transfer sources to the area FFE20H to FFEDFH when performing self-programming and rewriting the data flash memory.

2. Instructions can be executed from the RAM area excluding the general-purpose register area.

3. When boot swap is not used: Set the option bytes to 000C0H to 000C3H, and the on-chip debug security IDs to 000C4H to 000CDH.

When boot swap is used: Set the option bytes to 000C0H to 000C3H and 020C0H to 020C3H, and the on-chip debug security IDs to 000C4H to 000CDH and 020C4H to 020CDH.

<R> **4.** Writing boot cluster 0 can be prohibited depending on the setting of security (see **30.7 Security Settings**).

Caution When executing instructions from the RAM area, be sure to initialize the used RAM area + 10 bytes with any desired value.

Figure 3-3. Memory Map (R5F10BmC (m = A, B, G, L))

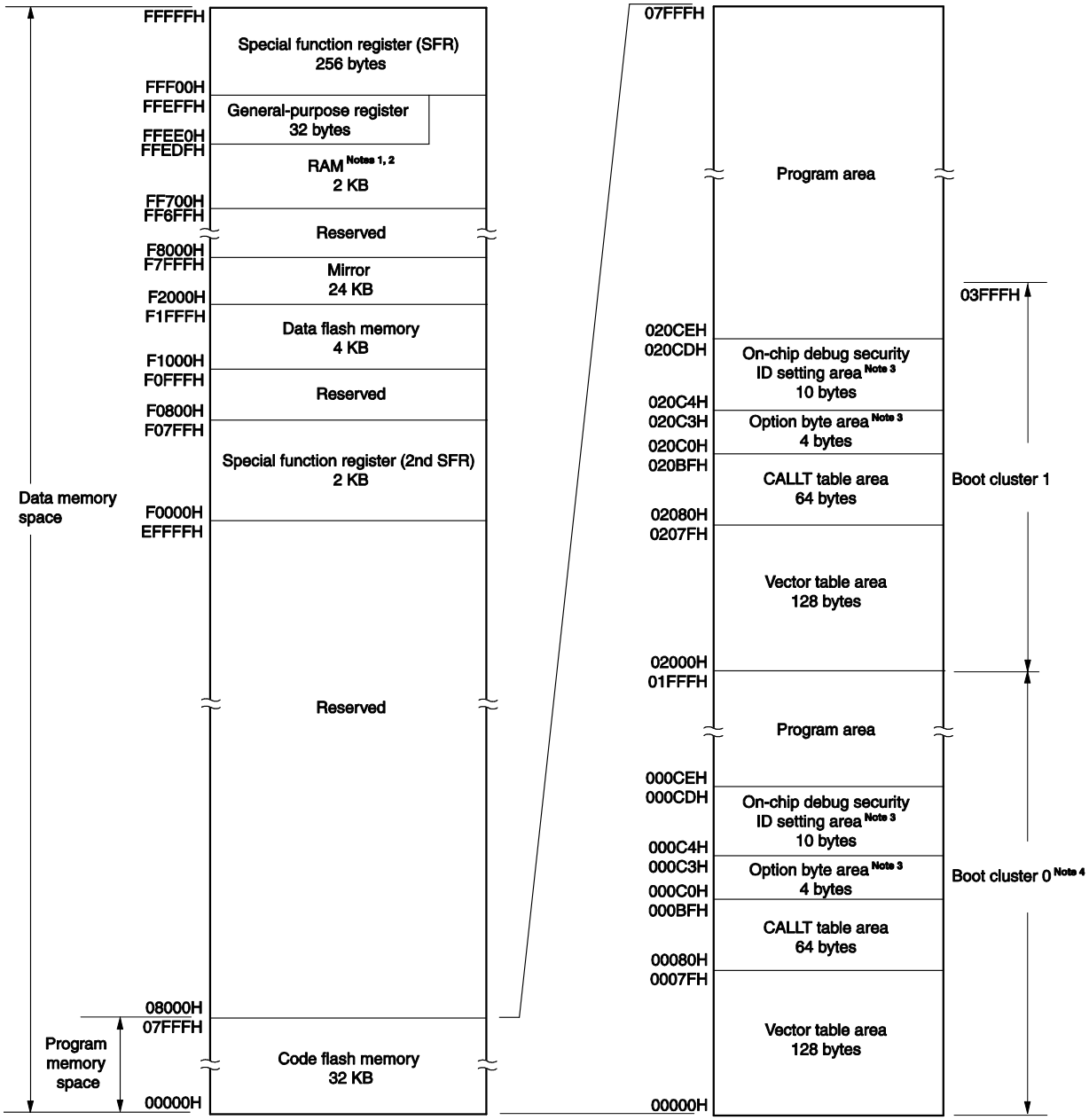

Notes 1. Do not allocate RAM addresses which are used as stack area, data buffers used by the libraries, branch destinations for vectored interrupt servicing, or DTC transfer destinations/transfer sources to the area FFE20H to FFEDFH when performing self-programming and rewriting the data flash memory.

2. Instructions can be executed from the RAM area excluding the general-purpose register area.

3. When boot swap is not used: Set the option bytes to 000C0H to 000C3H, and the on-chip debug security IDs to 000C4H to 000CDH.

When boot swap is used: Set the option bytes to 000C0H to 000C3H and 020C0H to 020C3H, and the on-chip debug security IDs to 000C4H to 000CDH and 020C4H to 020CDH.

<R> **4.** Writing boot cluster 0 can be prohibited depending on the setting of security (**see 30.7 Security Settings**).

Caution When executing instructions from the RAM area, be sure to initialize the used RAM area + 10 bytes with any desired value.

Figure 3-4. Memory Map (R5F10AmD (m = 6, A, B, G, L))

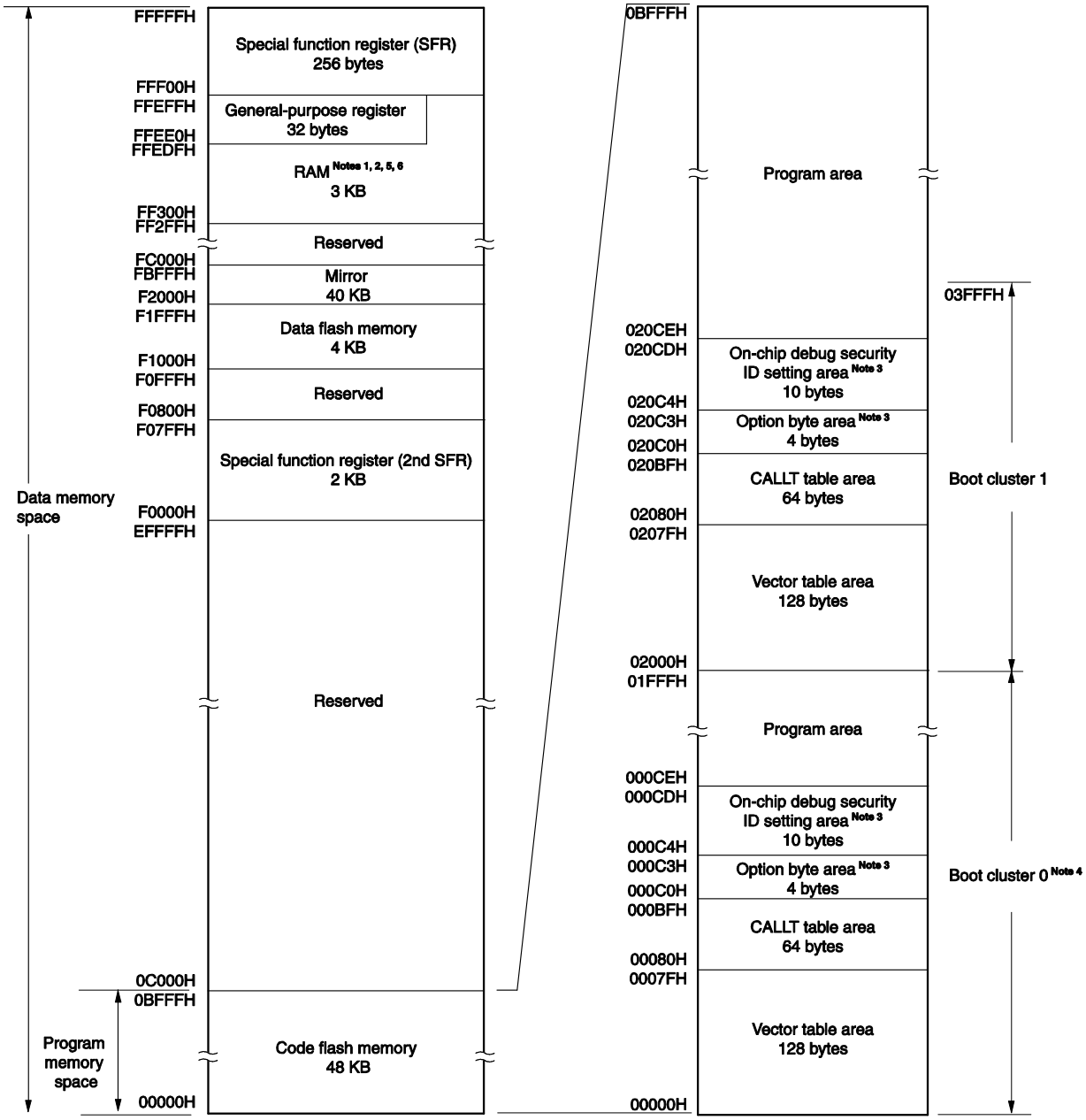

Notes 1. Do not allocate RAM addresses which are used as stack area, data buffers used by the libraries, branch destinations for vectored interrupt servicing, or DTC transfer destinations/transfer sources to the area FFE20H to FFEDFH when performing self-programming and rewriting the data flash memory.

2. Instructions can be executed from the RAM area excluding the general-purpose register area.

3. When boot swap is not used: Set the option bytes to 000C0H to 000C3H, and the on-chip debug security IDs to 000C4H to 000CDH.

When boot swap is used: Set the option bytes to 000C0H to 000C3H and 020C0H to 020C3H, and the on-chip debug security IDs to 000C4H to 000CDH and 020C4H to 020CDH.

<R> **4.** Writing boot cluster 0 can be prohibited depending on the setting of security (see **30.7 Security Settings**).

5. The debugger uses the area FF300H to FF37FH to store the result of tracing when the tracing function for on-chip debugging is in use. Accordingly, use of this area is prohibited while the tracing function is in use.

6. The debugger uses the area FF400H to FF42FH as a working area when the hot plug-in function is in use or when the DTC is in use for the real-time RAM monitor (RRM) or dynamic memory modification (DMM) function. Accordingly, use of this area is prohibited while the hot plug-in function is in use or the DTC is in use for the RRM or DMM function.

Caution When executing instructions from the RAM area, be sure to initialize the used RAM area + 10 bytes with any desired value.

Figure 3-5. Memory Map (R5F10BmD (m = A, B, G, L))

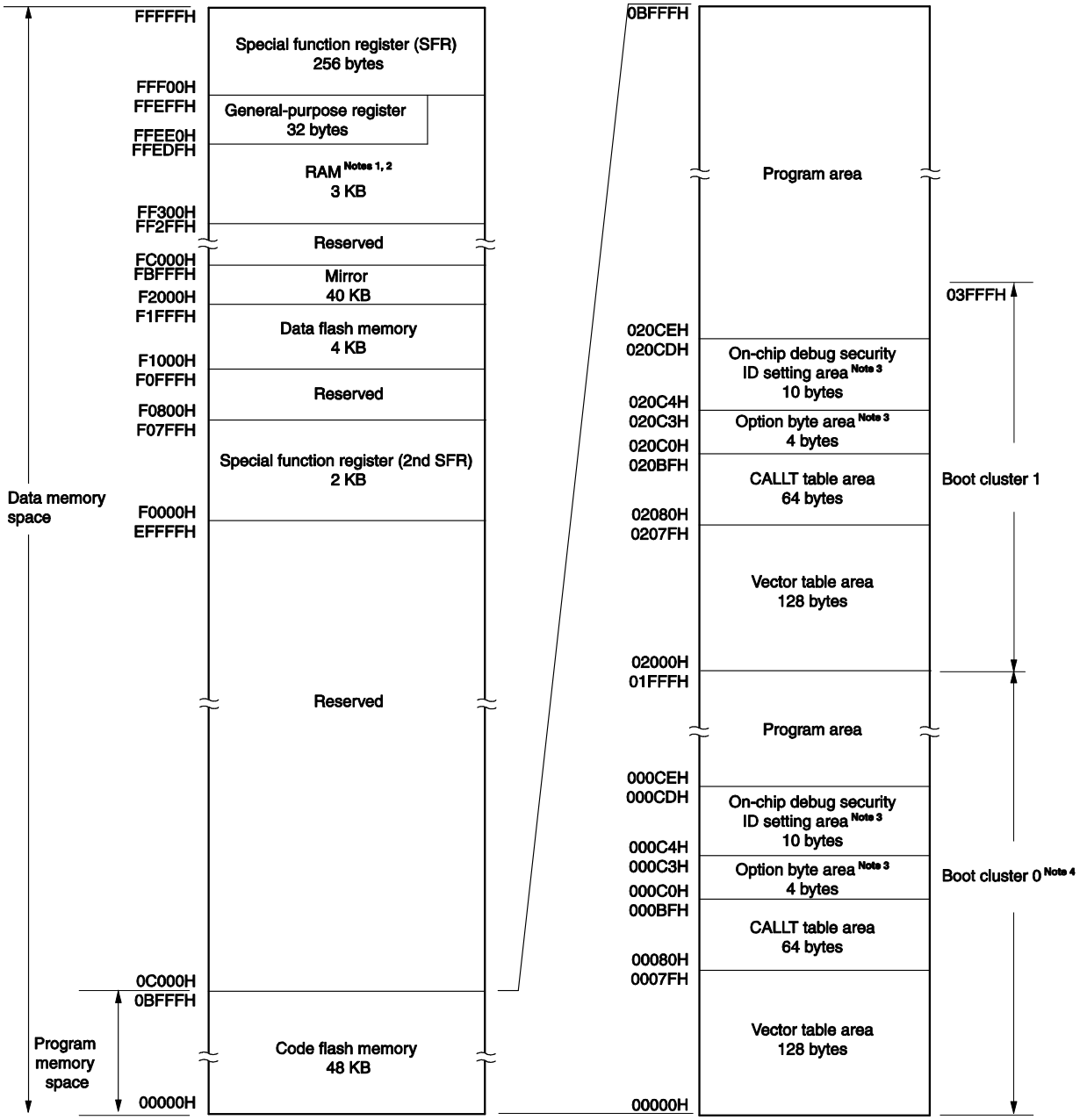

Notes 1. Do not allocate RAM addresses which are used as stack area, data buffers used by the libraries, branch destinations for vectored interrupt servicing, or DTC transfer destinations/transfer sources to the area FFE20H to FFEDFH when performing self-programming and rewriting the data flash memory.

2. Instructions can be executed from the RAM area excluding the general-purpose register area.

3. When boot swap is not used: Set the option bytes to 000C0H to 000C3H, and the on-chip debug security IDs to 000C4H to 000CDH.

When boot swap is used: Set the option bytes to 000C0H to 000C3H and 020C0H to 020C3H, and the on-chip debug security IDs to 000C4H to 000CDH and 020C4H to 020CDH.

<R> **4.** Writing boot cluster 0 can be prohibited depending on the setting of security (see **30.7 Security Settings**).

Caution When executing instructions from the RAM area, be sure to initialize the used RAM area + 10 bytes with any desired value.

Figure 3-6. Memory Map (R5F10PmD (m = A, B, G))

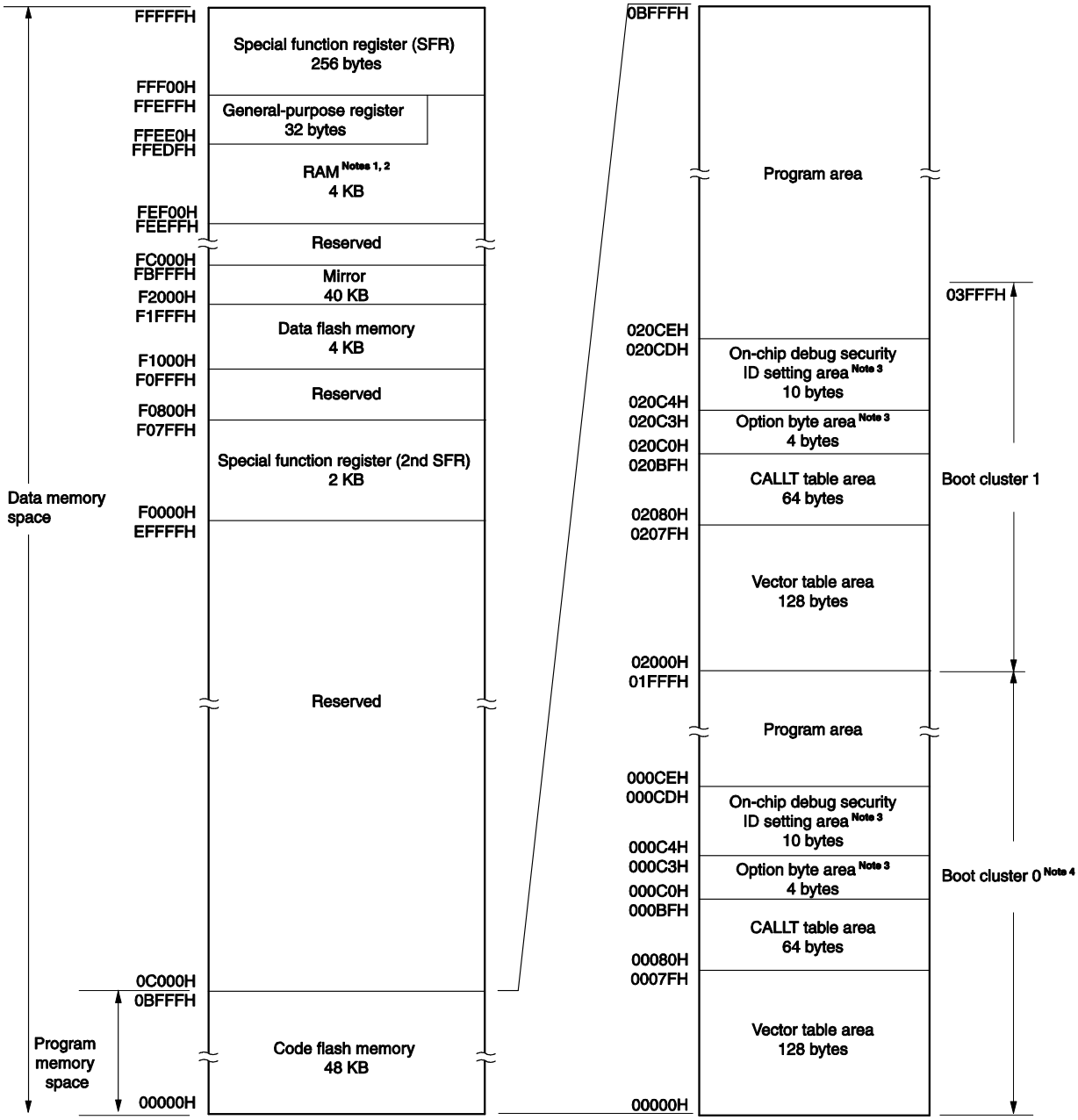

Notes 1. Do not allocate RAM addresses which are used as stack area, data buffers used by the libraries, branch destinations for vectored interrupt servicing, or DTC transfer destinations/transfer sources to the area FFE20H to FFEDFH when performing self-programming and rewriting the data flash memory.

2. Instructions can be executed from the RAM area excluding the general-purpose register area.

3. When boot swap is not used: Set the option bytes to 000C0H to 000C3H, and the on-chip debug security IDs to 000C4H to 000CDH.

When boot swap is used: Set the option bytes to 000C0H to 000C3H and 020C0H to 020C3H, and the on-chip debug security IDs to 000C4H to 000CDH and 020C4H to 020CDH.

<R> **4.** Writing boot cluster 0 can be prohibited depending on the setting of security (see **30.7 Security Settings**).

Caution When executing instructions from the RAM area, be sure to initialize the used RAM area + 10 bytes with any desired value.

Figure 3-7. Memory Map (R5F10AmE (m = 6, A, B, G, L))

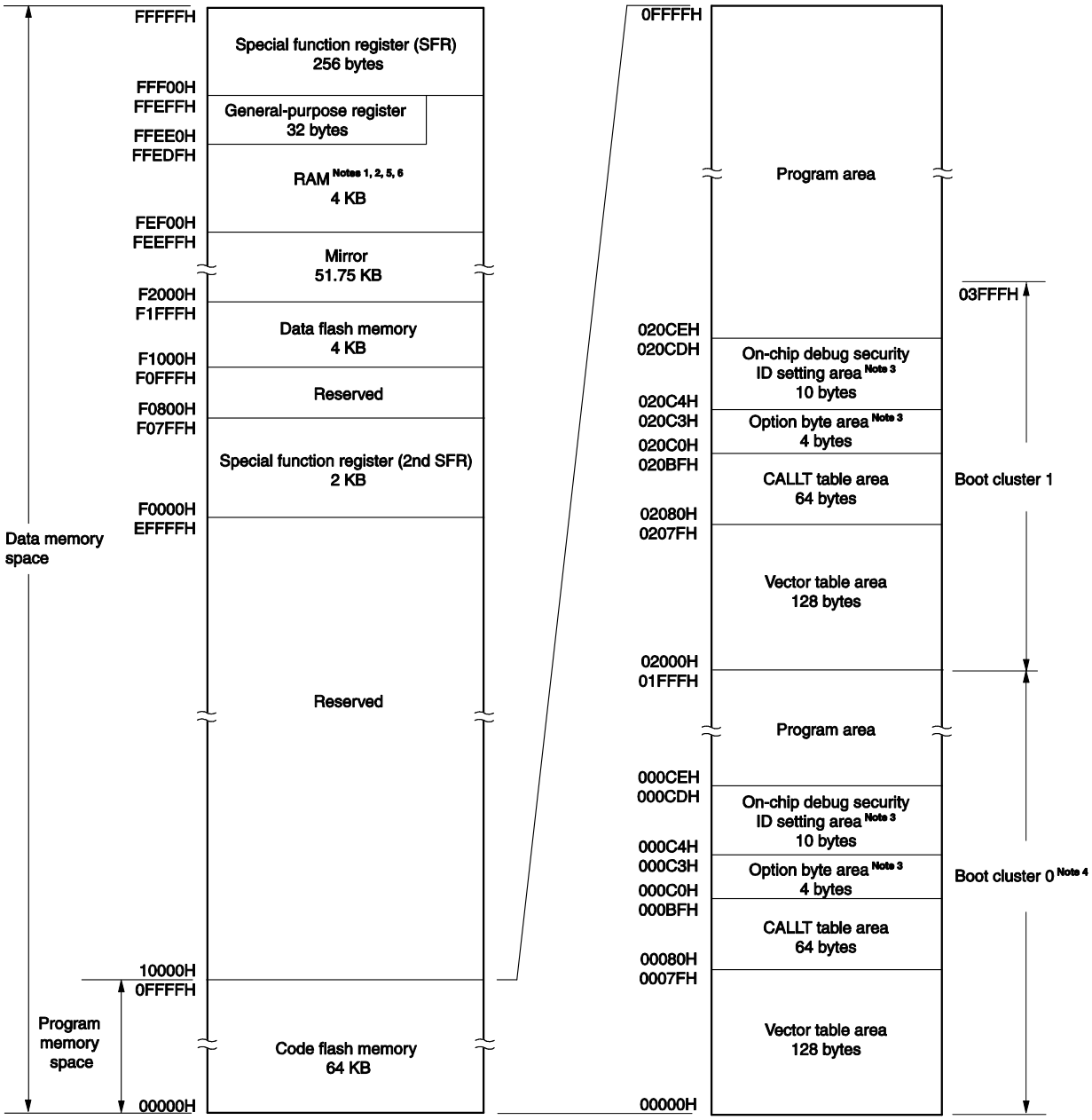

Notes 1. Do not allocate RAM addresses which are used as stack area, data buffers used by the libraries, branch destinations for vectored interrupt servicing, or DTC transfer destinations/transfer sources to the area FFE20H to FFEDFH when performing self-programming and rewriting the data flash memory. Also, use of the area FEF00H to FF2FFH is prohibited, because this area is used for each library. However, the area to which this prohibition applies may vary with the version of the library. For details, refer to the manual for the individual library.

2. Instructions can be executed from the RAM area excluding the general-purpose register area.

3. When boot swap is not used: Set the option bytes to 000C0H to 000C3H, and the on-chip debug security IDs to 000C4H to 000CDH.

When boot swap is used: Set the option bytes to 000C0H to 000C3H and 020C0H to 020C3H, and the on-chip debug security IDs to 000C4H to 000CDH and 020C4H to 020CDH.

<R>

4. Writing boot cluster 0 can be prohibited depending on the setting of security (see **30.7 Security Settings**).
5. The debugger uses the area FF300H to FF37FH to store the result of tracing when the tracing function for on-chip debugging is in use. Accordingly, use of this area is prohibited while the tracing function is in use.
6. The debugger uses the area FF400H to FF42FH as a working area when the hot plug-in function is in use or when the DTC is in use for the real-time RAM monitor (RRM) or dynamic memory modification (DMM) function. Accordingly, use of this area is prohibited while the hot plug-in function is in use or the DTC is in use for the RRM or DMM function.

Caution When executing instructions from the RAM area, be sure to initialize the used RAM area + 10 bytes with any desired value.

Figure 3-8. Memory Map (R5F10AME, R5F10BmE (m = A, B, G, L, M))

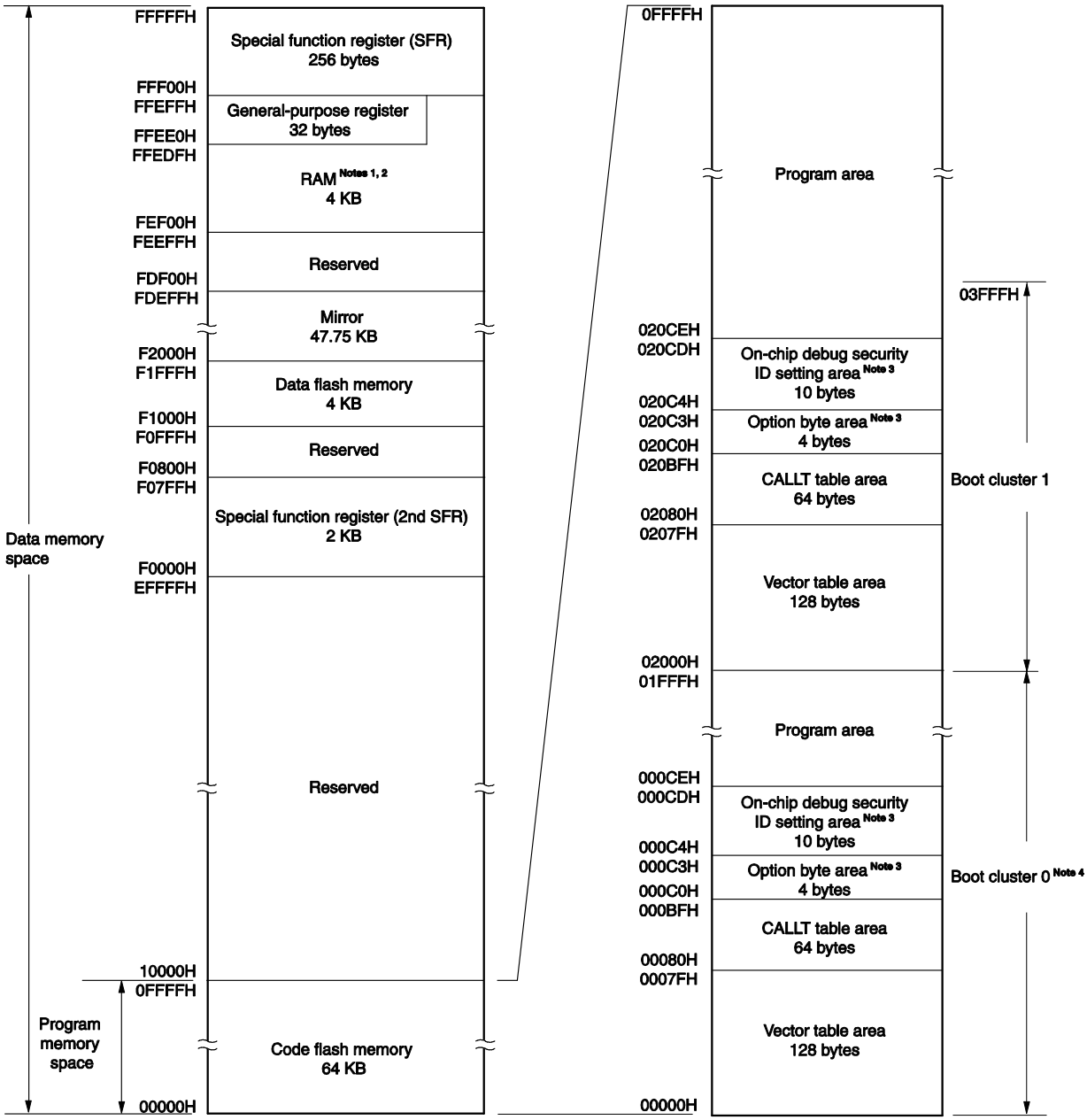

Notes 1. Do not allocate RAM addresses which are used as stack area, data buffers used by the libraries, branch destinations for vectored interrupt servicing, or DTC transfer destinations/transfer sources to the area FFE20H to FFEDFH when performing self-programming and rewriting the data flash memory.

2. Instructions can be executed from the RAM area excluding the general-purpose register area.

3. When boot swap is not used: Set the option bytes to 000C0H to 000C3H, and the on-chip debug security IDs to 000C4H to 000CDH.

When boot swap is used: Set the option bytes to 000C0H to 000C3H and 020C0H to 020C3H, and the on-chip debug security IDs to 000C4H to 000CDH and 020C4H to 020CDH.

<R> **4.** Writing boot cluster 0 can be prohibited depending on the setting of security (see **30.7 Security Settings**).

Caution When executing instructions from the RAM area, be sure to initialize the used RAM area + 10 bytes with any desired value.

Figure 3-9. Memory Map (R5F10PmE (m = A, B, G, L, M))

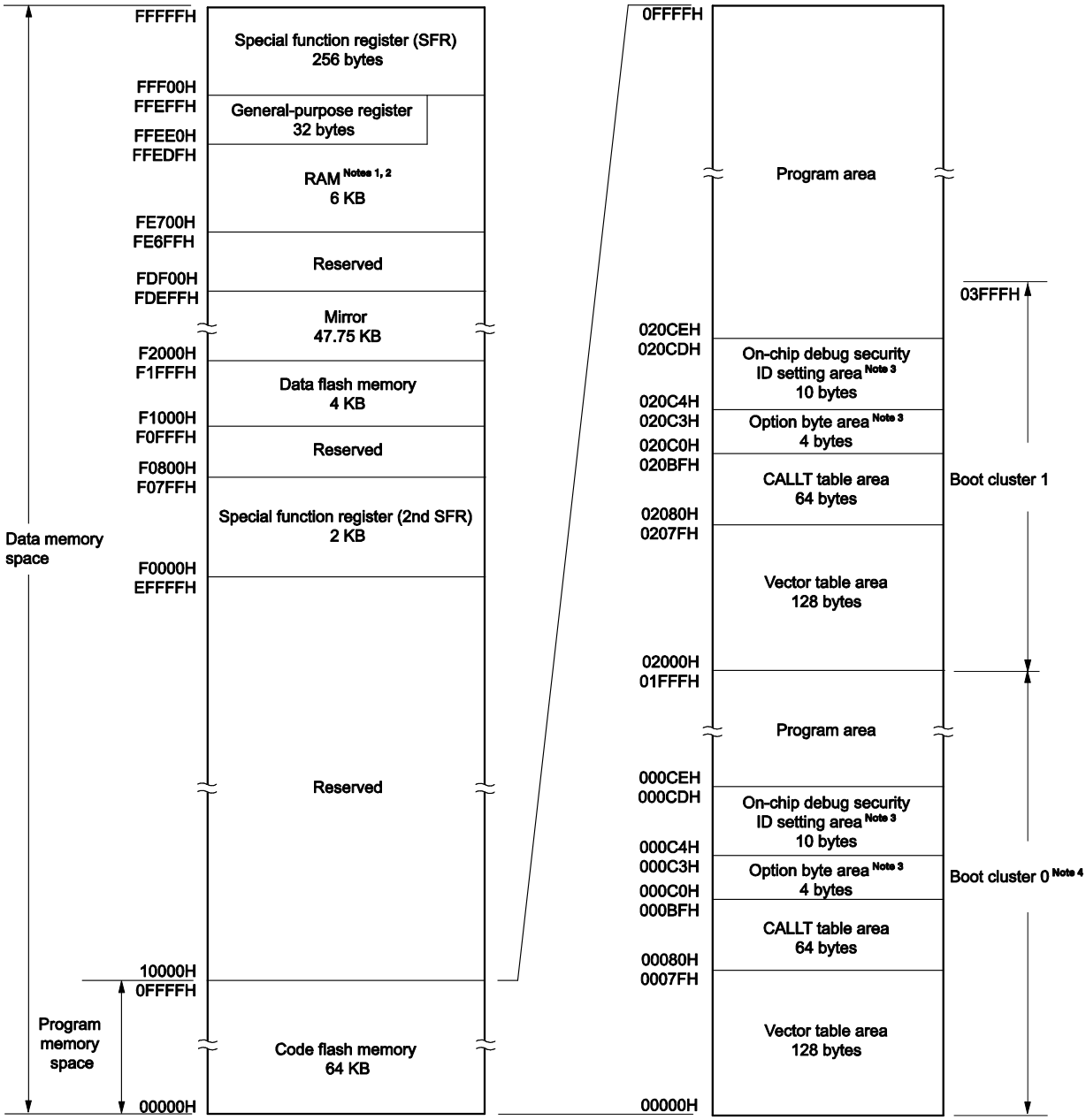

Notes 1. Do not allocate RAM addresses which are used as stack area, data buffers used by the libraries, branch destinations for vectored interrupt servicing, or DTC transfer destinations/transfer sources to the area FFE20H to FFEDFH when performing self-programming and rewriting the data flash memory.

2. Instructions can be executed from the RAM area excluding the general-purpose register area.

3. When boot swap is not used: Set the option bytes to 000C0H to 000C3H, and the on-chip debug security IDs to 000C4H to 000CDH.

When boot swap is used: Set the option bytes to 000C0H to 000C3H and 020C0H to 020C3H, and the on-chip debug security IDs to 000C4H to 000CDH and 020C4H to 020CDH.

<R> **4.** Writing boot cluster 0 can be prohibited depending on the setting of security (see **30.7 Security Settings**).

Caution When executing instructions from the RAM area, be sure to initialize the used RAM area + 10 bytes with any desired value.

Figure 3-10. Memory Map (R5F10PPE)

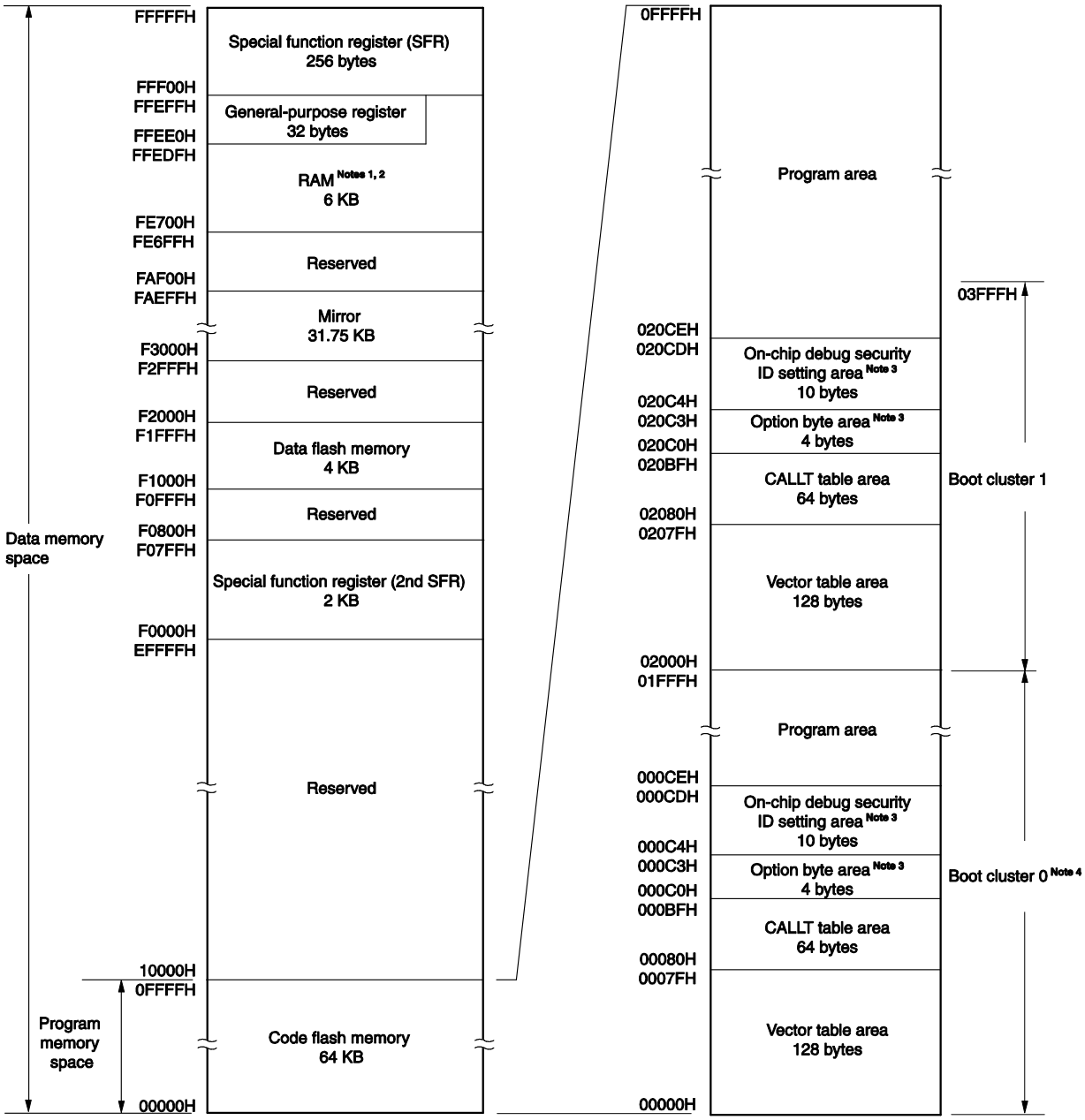

Notes 1. Do not allocate RAM addresses which are used as stack area, data buffers used by the libraries, branch destinations for vectored interrupt servicing, or DTC transfer destinations/transfer sources to the area FFE20H to FFEDFH when performing self-programming and rewriting the data flash memory.

2. Instructions can be executed from the RAM area excluding the general-purpose register area.

3. When boot swap is not used: Set the option bytes to 000C0H to 000C3H, and the on-chip debug security IDs to 000C4H to 000CDH.

When boot swap is used: Set the option bytes to 000C0H to 000C3H and 020C0H to 020C3H, and the on-chip debug security IDs to 000C4H to 000CDH and 020C4H to 020CDH.

<R> **4.** Writing boot cluster 0 can be prohibited depending on the setting of security (see **30.7 Security Settings**).

Caution When executing instructions from the RAM area, be sure to initialize the used RAM area + 10 bytes with any desired value.

Figure 3-11. Memory Map (R5F10AmF (m = G, L, M), R5F10BmF (m = A, B, G, L, M))

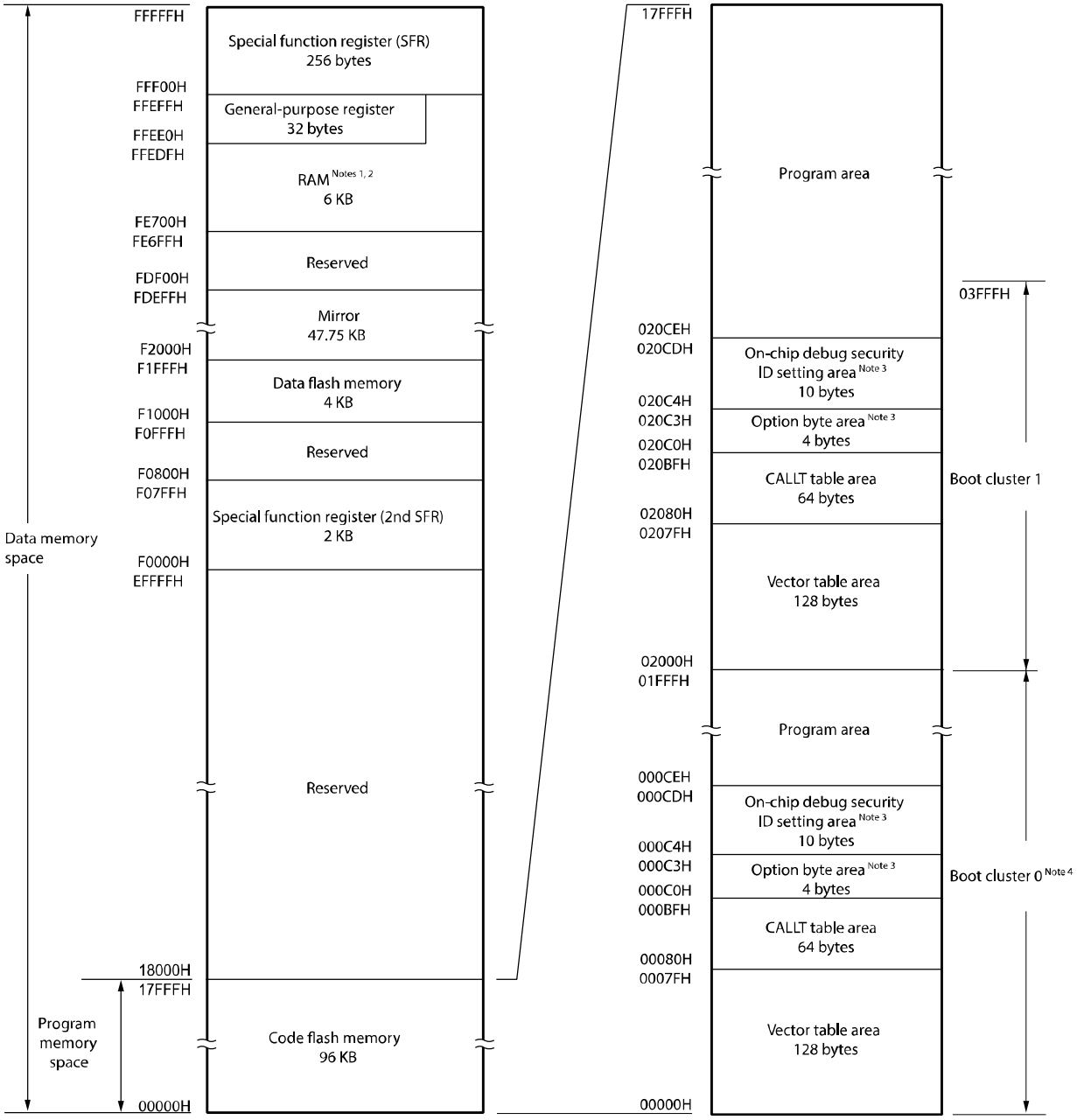

Notes 1. Do not allocate RAM addresses which are used as stack area, data buffers used by the libraries, branch destinations for vectored interrupt servicing, or DTC transfer destinations/transfer sources to the area FFE20H to FFEDFH when performing self-programming and rewriting the data flash memory.

2. Instructions can be executed from the RAM area excluding the general-purpose register area.

3. When boot swap is not used: Set the option bytes to 000C0H to 000C3H, and the on-chip debug security IDs to 000C4H to 000CDH.

When boot swap is used: Set the option bytes to 000C0H to 000C3H and 020C0H to 020C3H, and the on-chip debug security IDs to 000C4H to 000CDH and 020C4H to 020CDH.

<R> **4.** Writing boot cluster 0 can be prohibited depending on the setting of security (see **30.7 Security Settings**).

Caution When executing instructions from the RAM area, be sure to initialize the used RAM area + 10 bytes with any desired value.

Figure 3-12. Memory Map (R5F10PmF (m = G, L, M))

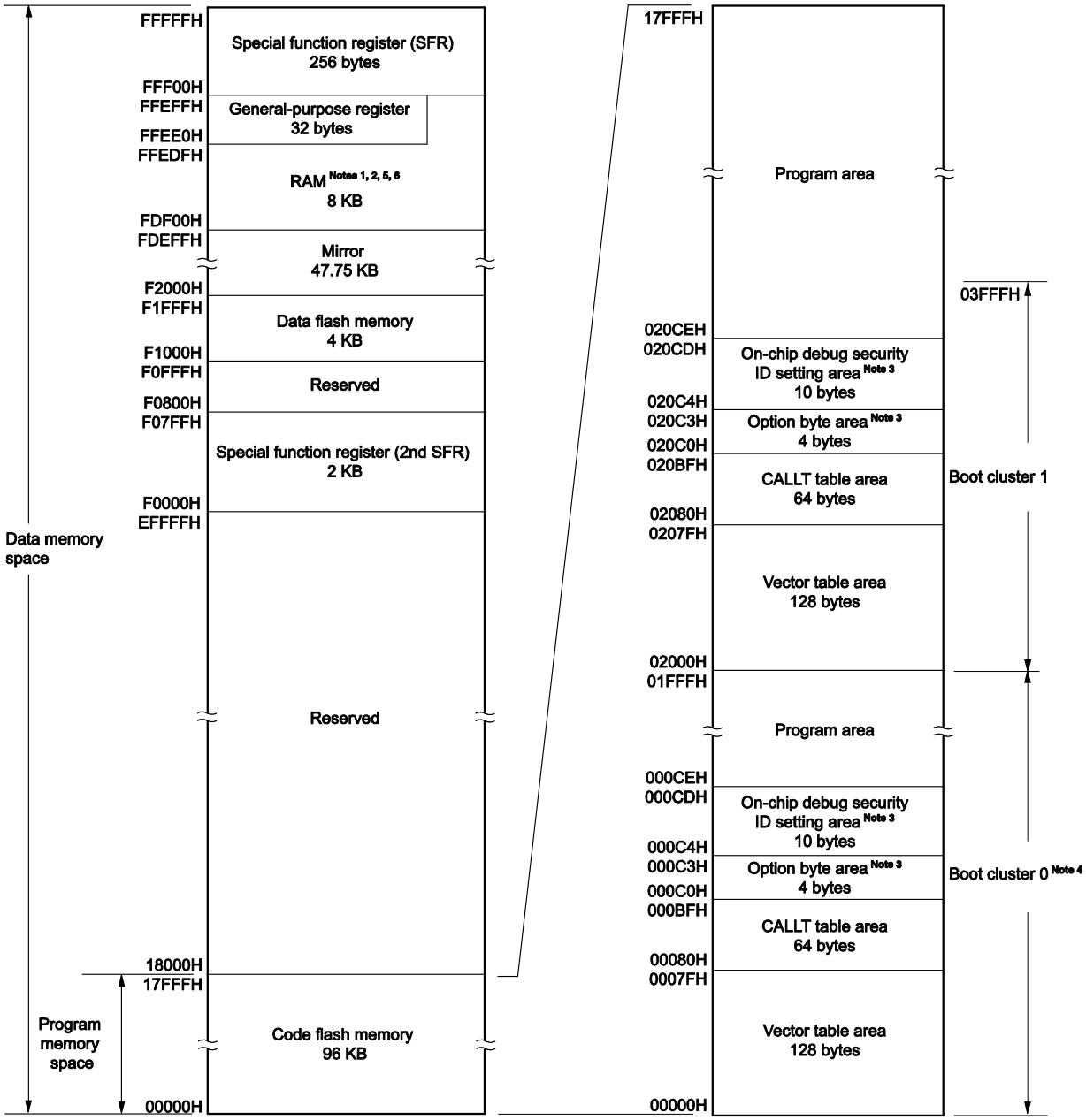

Notes 1. Do not allocate RAM addresses which are used as stack area, data buffers used by the libraries, branch destinations for vectored interrupt servicing, or DTC transfer destinations/transfer sources to the area FFE20H to FFEDFH when performing self-programming and rewriting the data flash memory. Also, use of the area FDF00H to FE2FFH is prohibited, because this area is used for each library. However, the area to which this prohibition applies may vary with the version of the library. For details, refer to the manual for the individual library.

2. Instructions can be executed from the RAM area excluding the general-purpose register area.

3. When boot swap is not used: Set the option bytes to 000C0H to 000C3H, and the on-chip debug security IDs to 000C4H to 000CDH.

When boot swap is used: Set the option bytes to 000C0H to 000C3H and 020C0H to 020C3H, and the on-chip debug security IDs to 000C4H to 000CDH and 020C4H to 020CDH.

<R> **4.** Writing boot cluster 0 can be prohibited depending on the setting of security (see **30.7 Security Settings**).

5. The debugger uses the area FE300H to FE4FFH to store the result of tracing when the tracing function for on-chip debugging is in use. Accordingly, use of this area is prohibited while the tracing function is in use.
6. The debugger uses the area FE500H to FE52FH as a working area when the hot plug-in function is in use or when the DTC is in use for the real-time RAM monitor (RRM) or dynamic memory modification (DMM) function. Accordingly, use of this area is prohibited while the hot plug-in function is in use or the DTC is in use for the RRM or DMM function.

Caution When executing instructions from the RAM area, be sure to initialize the used RAM area + 10 bytes with any desired value.

Figure 3-13. Memory Map (R5F10PPF)

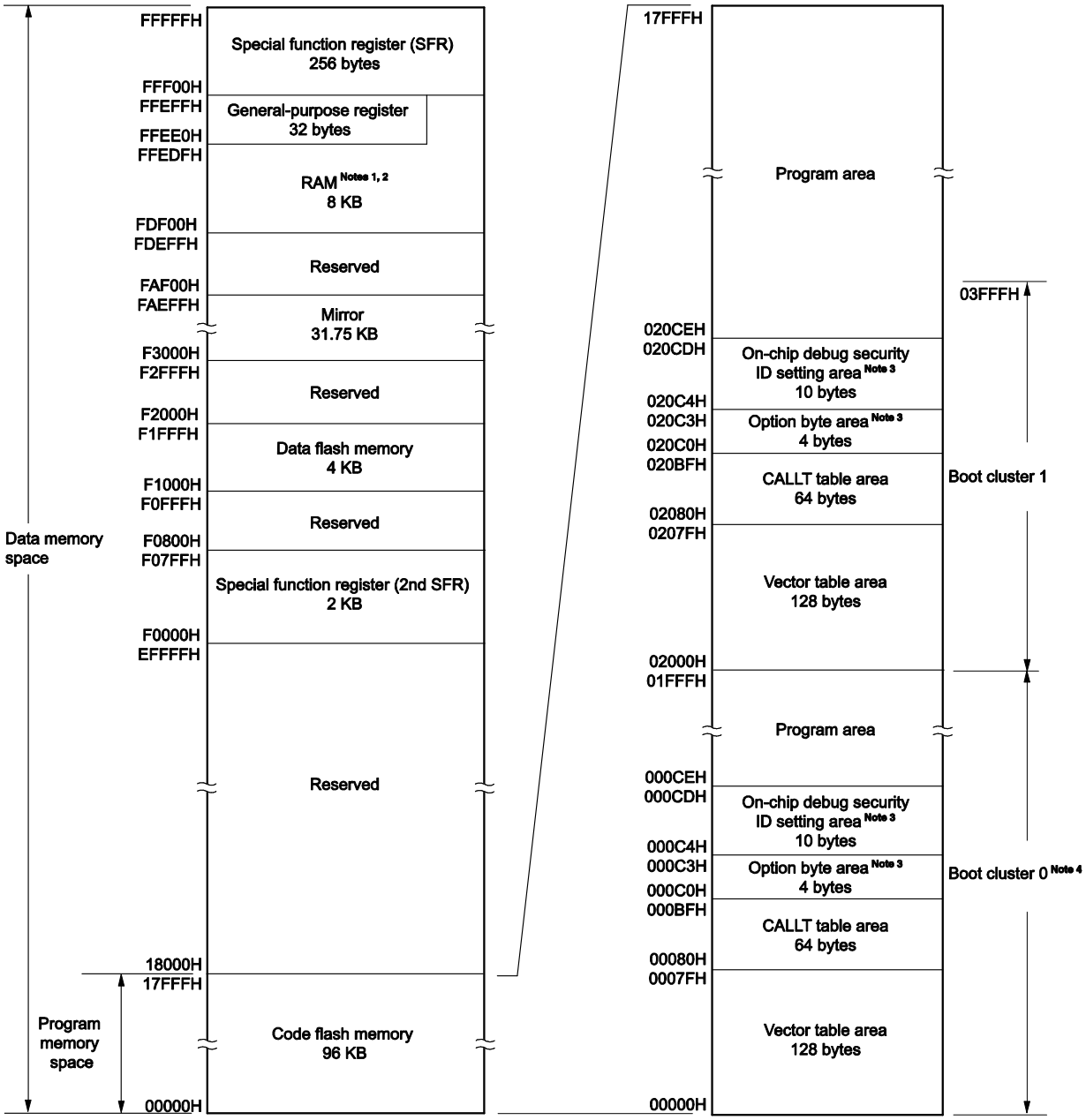

Notes 1. Do not allocate RAM addresses which are used as stack area, data buffers used by the libraries, branch destinations for vectored interrupt servicing, or DTC transfer destinations/transfer sources to the area FFE20H to FFEDFH when performing self-programming and rewriting the data flash memory.

2. Instructions can be executed from the RAM area excluding the general-purpose register area.

3. When boot swap is not used: Set the option bytes to 000C0H to 000C3H, and the on-chip debug security IDs to 000C4H to 000CDH.

When boot swap is used: Set the option bytes to 000C0H to 000C3H and 020C0H to 020C3H, and the on-chip debug security IDs to 000C4H to 000CDH and 020C4H to 020CDH.

<R> **4.** Writing boot cluster 0 can be prohibited depending on the setting of security (see **30.7 Security Settings**).

Caution When executing instructions from the RAM area, be sure to initialize the used RAM area + 10 bytes with any desired value.

Figure 3-14. Memory Map (R5F10AmG (m = G, L, M), R5F10BnG (n = A, B, G, L, M))

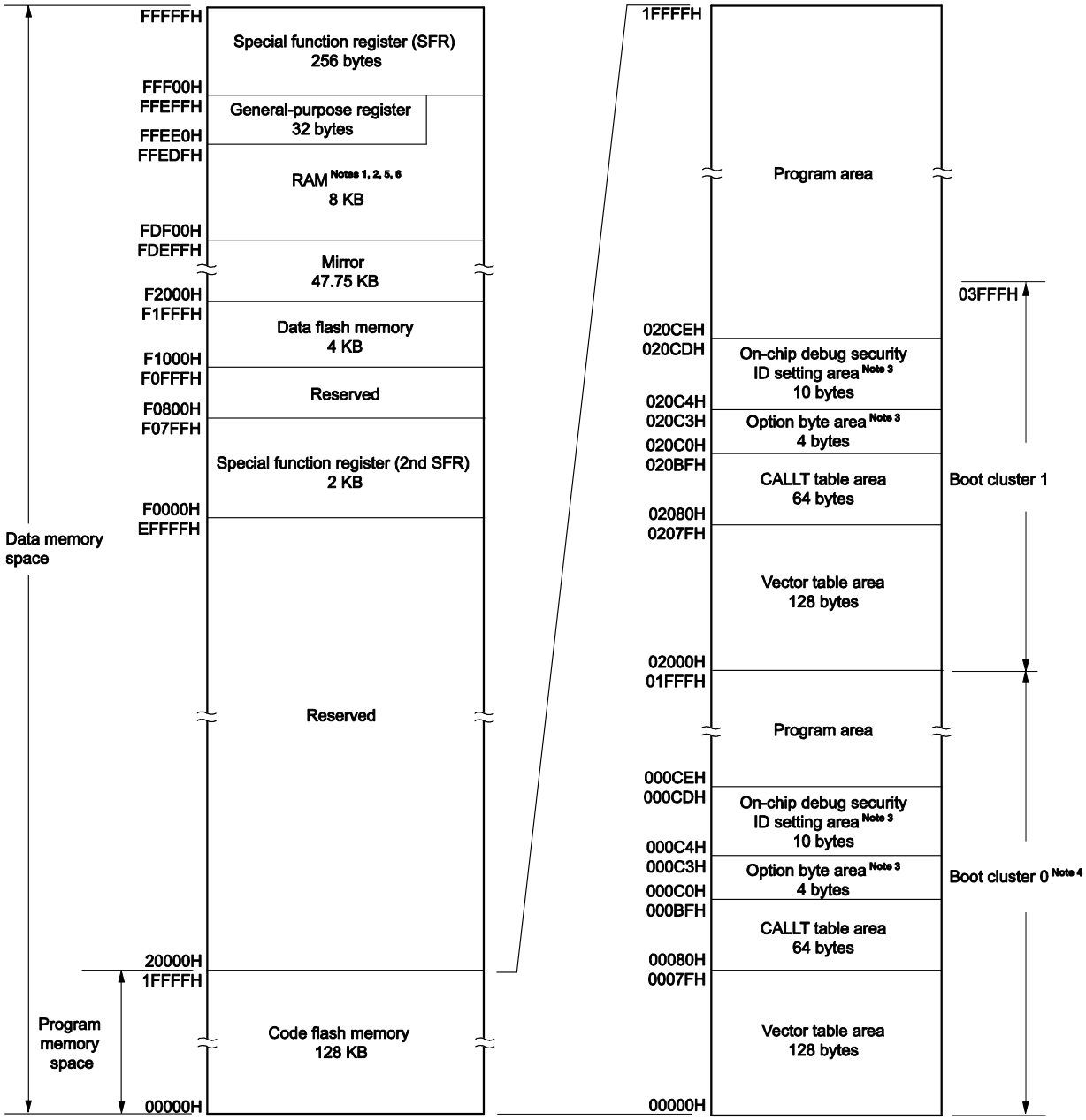

Notes 1. Do not allocate RAM addresses which are used as stack area, data buffers used by the libraries, branch destinations for vectored interrupt servicing, or DTC transfer destinations/transfer sources to the area FFE20H to FFEDFH when performing self-programming and rewriting the data flash memory. Also, use of the area FDF00H to FE2FFH is prohibited, because this area is used for each library. However, the area to which this prohibition applies may vary with the version of the library. For details, refer to the manual for the individual library.

2. Instructions can be executed from the RAM area excluding the general-purpose register area.

3. When boot swap is not used: Set the option bytes to 000C0H to 000C3H, and the on-chip debug security IDs to 000C4H to 000CDH.

When boot swap is used: Set the option bytes to 000C0H to 000C3H and 020C0H to 020C3H, and the on-chip debug security IDs to 000C4H to 000CDH and 020C4H to 020CDH.

<R> **4.** Writing boot cluster 0 can be prohibited depending on the setting of security (see **30.7 Security Settings**).

5. The debugger uses the area FE300H to FE4FFH to store the result of tracing when the tracing function for on-chip debugging is in use. Accordingly, use of this area is prohibited while the tracing function is in use.
6. The debugger uses the area FE500H to FE52FH as a working area when the hot plug-in function is in use or when the DTC is in use for the real-time RAM monitor (RRM) or dynamic memory modification (DMM) function. Accordingly, use of this area is prohibited while the hot plug-in function is in use or the DTC is in use for the RRM or DMM function.

Caution When executing instructions from the RAM area, be sure to initialize the used RAM area + 10 bytes with any desired value.

Figure 3-15. Memory Map (R5F10PmG (m = G, L, M, P))

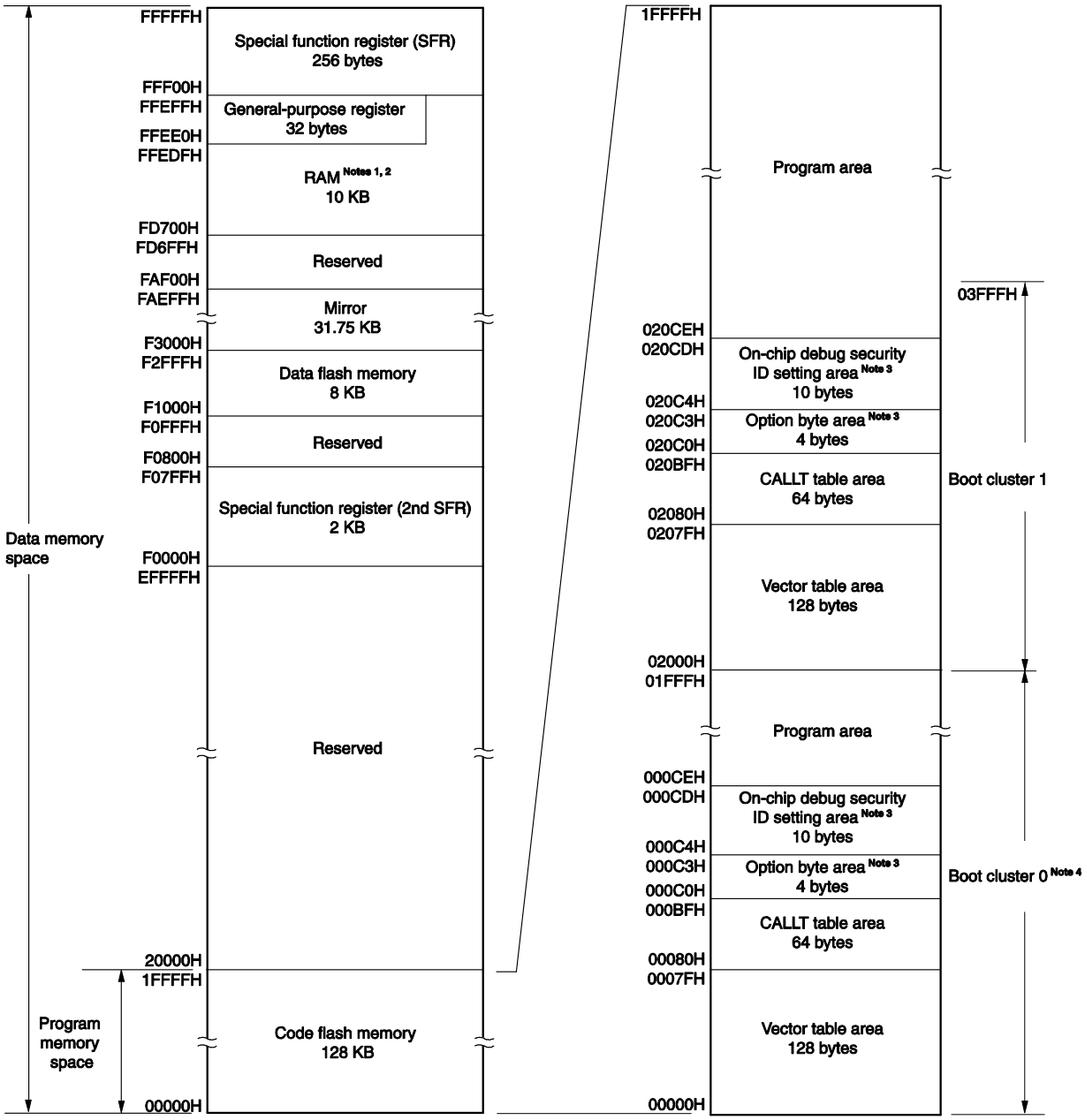

Notes 1. Do not allocate RAM addresses which are used as stack area, data buffers used by the libraries, branch destinations for vectored interrupt servicing, or DTC transfer destinations/transfer sources to the area FFE20H to FFEDFH when performing self-programming and rewriting the data flash memory.

2. Instructions can be executed from the RAM area excluding the general-purpose register area.

3. When boot swap is not used: Set the option bytes to 000C0H to 000C3H, and the on-chip debug security IDs to 000C4H to 000CDH.

When boot swap is used: Set the option bytes to 000C0H to 000C3H and 020C0H to 020C3H, and the on-chip debug security IDs to 000C4H to 000CDH and 020C4H to 020CDH.

<R> **4.** Writing boot cluster 0 can be prohibited depending on the setting of security (see **30.7 Security Settings**).

Caution When executing instructions from the RAM area, be sure to initialize the used RAM area + 10 bytes with any desired value.

Figure 3-16. Memory Map (R5F10PmH (m = G, L, M, P))

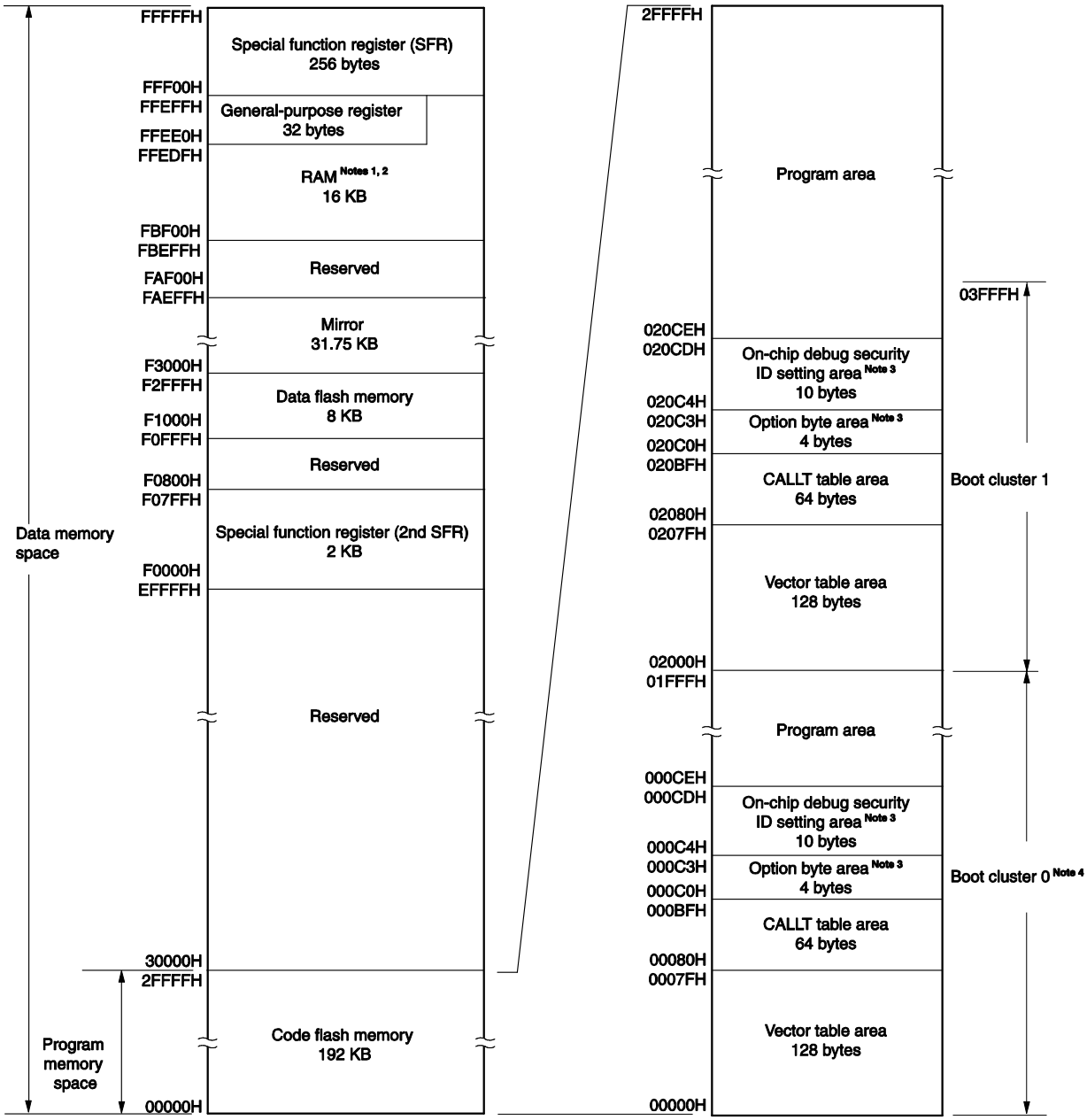

Notes 1. Do not allocate RAM addresses which are used as stack area, data buffers used by the libraries, branch destinations for vectored interrupt servicing, or DTC transfer destinations/transfer sources to the area FFE20H to FFEDFH when performing self-programming and rewriting the data flash memory.

2. Instructions can be executed from the RAM area excluding the general-purpose register area.

3. When boot swap is not used: Set the option bytes to 000C0H to 000C3H, and the on-chip debug security IDs to 000C4H to 000CDH.

When boot swap is used: Set the option bytes to 000C0H to 000C3H and 020C0H to 020C3H, and the on-chip debug security IDs to 000C4H to 000CDH and 020C4H to 020CDH.

<R> **4.** Writing boot cluster 0 can be prohibited depending on the setting of security (see **30.7 Security Settings**).

Caution When executing instructions from the RAM area, be sure to initialize the used RAM area + 10 bytes with any desired value.

Figure 3-17. Memory Map (R5F10PmJ (m = G, L, M, P))

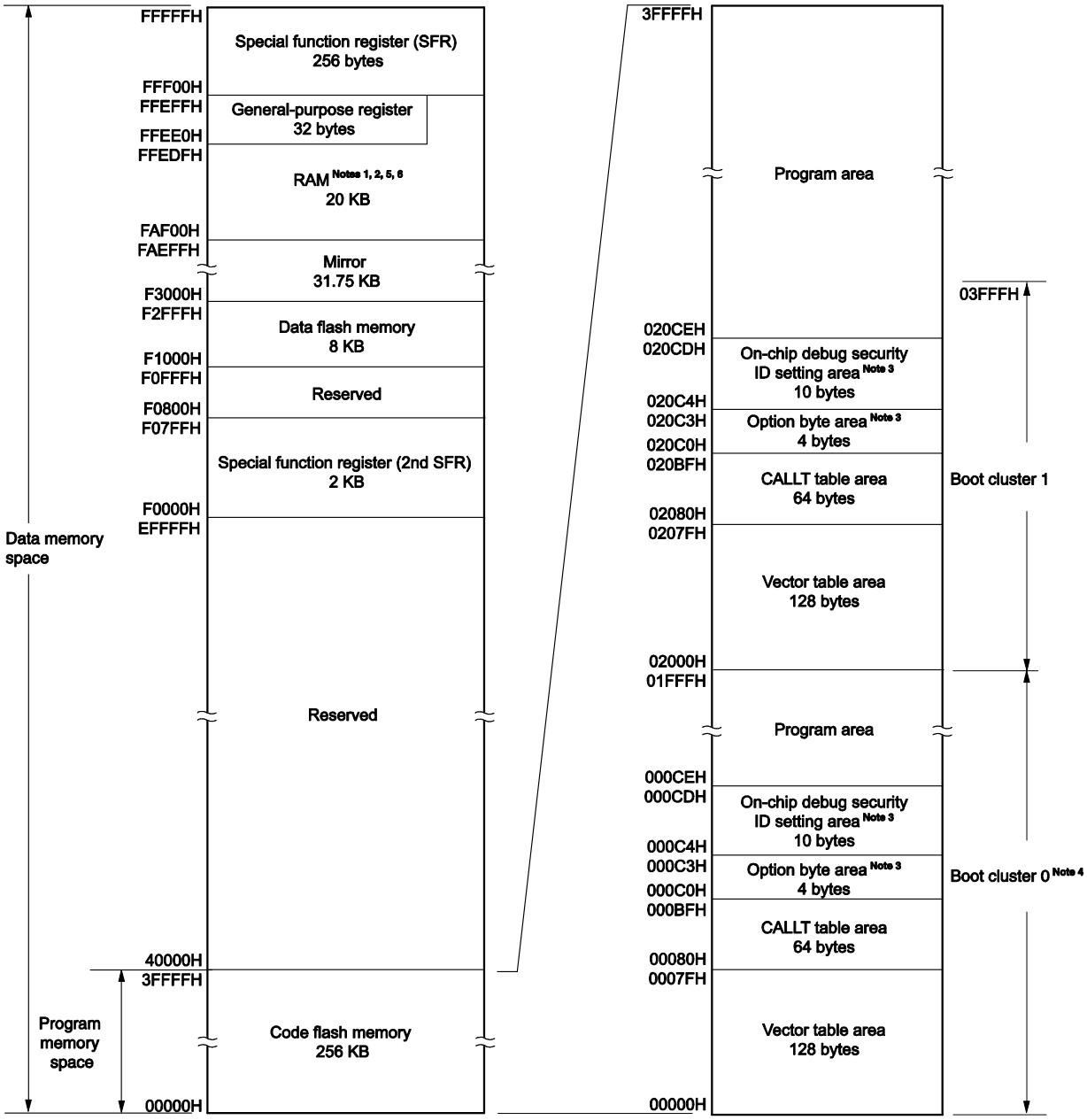

Notes 1. Do not allocate RAM addresses which are used as stack area, data buffers used by the libraries, branch destinations for vectored interrupt servicing, or DTC transfer destinations/transfer sources to the area FFE20H to FFEDFH when performing self-programming and rewriting the data flash memory. Also, use of the area FAF00H to FB2FFH is prohibited, because this area is used for each library. However, the area to which this prohibition applies may vary with the version of the library. For details, refer to the manual for the individual library.

2. Instructions can be executed from the RAM area excluding the general-purpose register area.

3. When boot swap is not used: Set the option bytes to 000C0H to 000C3H, and the on-chip debug security IDs to 000C4H to 000CDH.

When boot swap is used: Set the option bytes to 000C0H to 000C3H and 020C0H to 020C3H, and the on-chip debug security IDs to 000C4H to 000CDH and 020C4H to 020CDH.

<R> **4.** Writing boot cluster 0 can be prohibited depending on the setting of security (see **30.7 Security Settings**).

5. The debugger uses the area FB300H to FB4FFH to store the result of tracing when the tracing function for on-chip debugging is in use. Accordingly, use of this area is prohibited while the tracing function is in use.
6. The debugger uses the area FB500H to FB52FH as a working area when the hot plug-in function is in use or when the DTC is in use for the real-time RAM monitor (RRM) or dynamic memory modification (DMM) function. Accordingly, use of this area is prohibited while the hot plug-in function is in use or the DTC is in use for the RRM or DMM function.

Caution When executing instructions from the RAM area, be sure to initialize the used RAM area + 10 bytes with any desired value.

Remark The flash memory is divided into blocks (one block = 1 KB). For the address values and block numbers, see **Table 3-1 Correspondence between Address Values and Block Numbers in Flash Memory**.

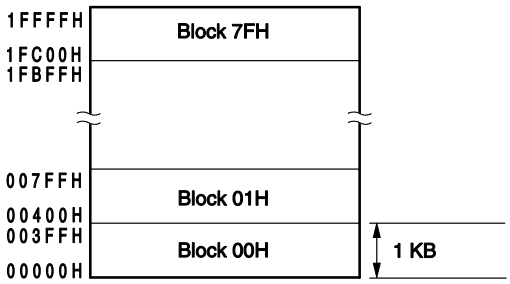

(R5F10BMG)

Correspondence between the address values and block numbers in the flash memory are shown below.

Table 3-1. Correspondence between Address Values and Block Numbers in Flash Memory (1/2)

Address Value	Block Number	Address Value	Block Number	Address Value	Block Number	Address Value	Block Number
00000H to 003FFH	00H	08000H to 083FFH	20H	10000H to 103FFH	40H	18000H to 183FFH	60H
00400H to 007FFH	01H	08400H to 087FFH	21H	10400H to 107FFH	41H	18400H to 187FFH	61H
00800H to 00BFFH	02H	08800H to 08BFFH	22H	10800H to 10BFFH	42H	18800H to 18BFFH	62H
00C00H to 00FFFH	03H	08C00H to 08FFFH	23H	10C00H to 10FFFH	43H	18C00H to 18FFFH	63H
01000H to 013FFH	04H	09000H to 093FFH	24H	11000H to 113FFH	44H	19000H to 193FFH	64H
01400H to 017FFH	05H	09400H to 097FFH	25H	11400H to 117FFH	45H	19400H to 197FFH	65H
01800H to 01BFFH	06H	09800H to 09BFFH	26H	11800H to 11BFFH	46H	19800H to 19BFFH	66H
01C00H to 01FFFH	07H	09C00H to 09FFFH	27H	11C00H to 11FFFH	47H	19C00H to 19FFFH	67H
02000H to 023FFH	08H	0A000H to 0A3FFH	28H	12000H to 123FFH	48H	1A000H to 1A3FFH	68H
02400H to 027FFH	09H	0A400H to 0A7FFH	29H	12400H to 127FFH	49H	1A400H to 1A7FFH	69H
02800H to 02BFFH	0AH	0A800H to 0ABFFH	2AH	12800H to 12BFFH	4AH	1A800H to 1ABFFH	6AH
02C00H to 02FFFH	0BH	0AC00H to 0AFFFH	2BH	12C00H to 12FFFH	4BH	1AC00H to 1AFFFH	6BH
03000H to 033FFH	0CH	0B000H to 0B3FFH	2CH	13000H to 133FFH	4CH	1B000H to 1B3FFH	6CH
03400H to 037FFH	0DH	0B400H to 0B7FFH	2DH	13400H to 137FFH	4DH	1B400H to 1B7FFH	6DH
03800H to 03BFFH	0EH	0B800H to 0BBFFH	2EH	13800H to 13BFFH	4EH	1B800H to 1BBFFH	6EH
03C00H to 03FFFH	0FH	0BC00H to 0BFFFH	2FH	13C00H to 13FFFH	4FH	1BC00H to 1BFFFH	6FH
04000H to 043FFH	10H	0C000H to 0C3FFH	30H	14000H to 143FFH	50H	1C000H to 1C3FFH	70H
04400H to 047FFH	11H	0C400H to 0C7FFH	31H	14400H to 147FFH	51H	1C400H to 1C7FFH	71H
04800H to 04BFFH	12H	0C800H to 0CBFFH	32H	14800H to 14BFFH	52H	1C800H to 1CBFFH	72H
04C00H to 04FFFH	13H	0CC00H to 0CFFFH	33H	14C00H to 14FFFH	53H	1CC00H to 1CFFFH	73H
05000H to 053FFH	14H	0D000H to 0D3FFH	34H	15000H to 153FFH	54H	1D000H to 1D3FFH	74H
05400H to 057FFH	15H	0D400H to 0D7FFH	35H	15400H to 157FFH	55H	1D400H to 1D7FFH	75H
05800H to 05BFFH	16H	0D800H to 0DBFFH	36H	15800H to 15BFFH	56H	1D800H to 1DBFFH	76H
05C00H to 05FFFH	17H	0DC00H to 0DFFFH	37H	15C00H to 15FFFH	57H	1DC00H to 1DFFFH	77H
06000H to 063FFH	18H	0E000H to 0E3FFH	38H	16000H to 163FFH	58H	1E000H to 1E3FFH	78H
06400H to 067FFH	19H	0E400H to 0E7FFH	39H	16400H to 167FFH	59H	1E400H to 1E7FFH	79H
06800H to 06BFFH	1AH	0E800H to 0EBFFH	3AH	16800H to 16BFFH	5AH	1E800H to 1EBFFH	7AH
06C00H to 06FFFH	1BH	0EC00H to 0EFFFH	3BH	16C00H to 16FFFH	5BH	1EC00H to 1EFFFH	7BH
07000H to 073FFH	1CH	0F000H to 0F3FFH	3CH	17000H to 173FFH	5CH	1F000H to 1F3FFH	7CH
07400H to 077FFH	1DH	0F400H to 0F7FFH	3DH	17400H to 177FFH	5DH	1F400H to 1F7FFH	7DH
07800H to 07BFFH	1EH	0F800H to 0FBFFH	3EH	17800H to 17BFFH	5EH	1F800H to 1FBFFH	7EH
07C00H to 07FFFH	1FH	0FC00H to 0FFFFH	3FH	17C00H to 17FFFH	5FH	1FC00H to 1FFFFH	7FH

Table 3-1. Correspondence between Address Values and Block Numbers in Flash Memory (2/2)

Address Value	Block Number	Address Value	Block Number	Address Value	Block Number	Address Value	Block Number
20000H to 203FFH	80H	28000H to 283FFH	A0H	30000H to 303FFH	C0H	38000H to 383FFH	E0H
20400H to 207FFH	81H	28400H to 287FFH	A1H	30400H to 307FFH	C1H	38400H to 387FFH	E1H
20800H to 20BFFH	82H	28800H to 28BFFH	A2H	30800H to 30BFFH	C2H	38800H to 38BFFH	E2H
20C00H to 20FFFH	83H	28C00H to 28FFFH	A3H	30C00H to 30FFFH	C3H	38C00H to 38FFFH	E3H
21000H to 213FFH	84H	29000H to 293FFH	A4H	31000H to 313FFH	C4H	39000H to 393FFH	E4H
21400H to 217FFH	85H	29400H to 297FFH	A5H	31400H to 317FFH	C5H	39400H to 397FFH	E5H
21800H to 21BFFH	86H	29800H to 29BFFH	A6H	31800H to 31BFFH	C6H	39800H to 39BFFH	E6H
21C00H to 21FFFH	87H	29C00H to 29FFFH	A7H	31C00H to 31FFFH	C7H	39C00H to 39FFFH	E7H
22000H to 223FFH	88H	2A000H to 2A3FFH	A8H	32000H to 323FFH	C8H	3A000H to 3A3FFH	E8H
22400H to 227FFH	89H	2A400H to 2A7FFH	A9H	32400H to 327FFH	C9H	3A400H to 3A7FFH	E9H
22800H to 22BFFH	8AH	2A800H to 2ABFFH	AAH	32800H to 32BFFH	CAH	3A800H to 3ABFFH	EAH
22C00H to 22FFFH	8BH	2AC00H to 2AFFFH	ABH	32C00H to 32FFFH	CBH	3AC00H to 3AFFFH	EBH
23000H to 233FFH	8CH	2B000H to 2B3FFH	ACH	33000H to 333FFH	CCH	3B000H to 3B3FFH	ECH
23400H to 237FFH	8DH	2B400H to 2B7FFH	ADH	33400H to 337FFH	CDH	3B400H to 3B7FFH	EDH
23800H to 23BFFH	8EH	2B800H to 2BBFFH	AEH	33800H to 33BFFH	CEH	3B800H to 3BBFFH	EEH
23C00H to 23FFFH	8FH	2BC00H to 2BFFFH	AFH	33C00H to 33FFFH	CFH	3BC00H to 3BFFFH	EFH
24000H to 243FFH	90H	2C000H to 2C3FFH	B0H	34000H to 343FFH	D0H	3C000H to 3C3FFH	F0H
24400H to 247FFH	91H	2C400H to 2C7FFH	B1H	34400H to 347FFH	D1H	3C400H to 3C7FFH	F1H
24800H to 24BFFH	92H	2C800H to 2CBFFH	B2H	34800H to 34BFFH	D2H	3C800H to 3CBFFH	F2H
24C00H to 24FFFH	93H	2CC00H to 2CFFFH	B3H	34C00H to 34FFFH	D3H	3CC00H to 3CFFFH	F3H
25000H to 253FFH	94H	2D000H to 2D3FFH	B4H	35000H to 353FFH	D4H	3D000H to 3D3FFH	F4H
25400H to 257FFH	95H	2D400H to 2D7FFH	B5H	35400H to 357FFH	D5H	3D400H to 3D7FFH	F5H
25800H to 25BFFH	96H	2D800H to 2DBFFH	B6H	35800H to 35BFFH	D6H	3D800H to 3DBFFH	F6H
25C00H to 25FFFH	97H	2DC00H to 2DFFFH	B7H	35C00H to 35FFFH	D7H	3DC00H to 3DFFFH	F7H
26000H to 263FFH	98H	2E000H to 2E3FFH	B8H	36000H to 363FFH	D8H	3E000H to 3E3FFH	F8H
26400H to 267FFH	99H	2E400H to 2E7FFH	B9H	36400H to 367FFH	D9H	3E400H to 3E7FFH	F9H
26800H to 26BFFH	9AH	2E800H to 2EBFFH	BAH	36800H to 36BFFH	DAH	3E800H to 3EBFFH	FAH
26C00H to 26FFFH	9BH	2EC00H to 2EFFFH	BBH	36C00H to 36FFFH	DBH	3EC00H to 3EFFFH	FBH
27000H to 273FFH	9CH	2F000H to 2F3FFH	BCH	37000H to 373FFH	DCH	3F000H to 3F3FFH	FCH
27400H to 277FFH	9DH	2F400H to 2F7FFH	BDH	37400H to 377FFH	DDH	3F400H to 3F7FFH	FDH
27800H to 27BFFH	9EH	2F800H to 2FBFFH	BEH	37800H to 37BFFH	DEH	3F800H to 3FBFFH	FEH
27C00H to 27FFFH	9FH	2FC00H to 2FFFFH	BFH	37C00H to 37FFFH	DFH	3FC00H to 3FFFFH	FFH

3.1.1 Internal program memory space

The internal program memory space stores the program and table data.

The RL78/F13 and RL78/F14 products incorporate internal ROM (flash memory), as shown below.

Table 3-2. Internal ROM Capacity

Part Number	Internal ROM	
	Structure	Capacity
R5F10AmA (m = 6, A, B, G)	Flash memory	16 Kbytes (00000H-03FFFH)
R5F10AmC (m = 6, A, B, G, L)		32 Kbytes (00000H-07FFFH)
R5F10BmC (m = A, B, G, L)		
R5F10AmD (m = 6, A, B, G, L)		48 Kbytes (00000H-0BFFFH)
R5F10BmD (m = A, B, G, L)		
R5F10PmD (m = A, B,G)		
R5F10AmE (m = 6, A, B, G, L, M)		64 Kbytes (00000H-0FFFFH)
R5F10BmE (m = A, B, G, L, M)		
R5F10PmE (m = A, B, G, L, M, P)		
R5F10AmF (m = G, L, M)		96 Kbytes (00000H-17FFFH)
R5F10BmF (m = A, B, G, L, M)		
R5F10PmF (m = G, L, M, P)		
R5F10AmG (m = G, L, M)		128 Kbytes (00000H-1FFFFH)
R5F10BmG (m = A, B, G, L, M)		
R5F10PmG (m = G, L, M, P)		
R5F10PmH (m = G, L, M, P)		192 Kbytes (00000H-2FFFFH)
R5F10PmJ (m = G, L, M, P)		256 Kbytes (00000H-3FFFFH)

The internal program memory space is divided into the following areas.

(1) Vector table area

The 128-byte area 00000H to 0007FH is reserved as a vector table area. The program start addresses for branch upon reset or generation of each interrupt request are stored in the vector table area. Furthermore, the interrupt jump address is a 64 K address of 00000H to 0FFFFH, because the vector code is assumed to be 2 bytes.

Of the 16-bit address, the lower 8 bits are stored at even addresses and the higher 8 bits are stored at odd addresses.

To use the boot swap function, set a vector table also at 02000H to 0207FH.

Table 3-3 lists the vector table. “√” indicates an interrupt source which is supported. “–” indicates an interrupt source which is not supported.

Table 3-3. Vector Table (1/2)

Vector Table Address	Interrupt Source	100-pin	80-pin	64-pin	48-pin	32-pin	30-pin	20-pin
0000H	RESET, POR, LVD, WDT, TRAP, IAW, CLM	√	√	√	√	√	√	√
0004H	INTWDTI	√	√	√	√	√	√	√
0006H	INTLVI	√	√	√	√	√	√	√
0008H	INTP0	√	√	√	√	√	√	√
000AH	INTP1	√	√	√	√	√	√	√
000CH	INTP2	√	√	√	√	√	√	√
000EH	INTP3	√	√	√	√	√	√	√
0010H	INTP4/INTSPM	√	√	√	√	√	√	√
0012H	INTP5/INTCMP0	√	√	√	√	√	√	–
0014H	INTP13	√	√	–	–	–	–	–
	INTCLM	√	√	√	√	√	√	√
0016H	INTST0	√	√	√	√	√	√	√
	INTCSI00	√	√	√	√	√	√	√
	INTIIC00	√	√	√	√	√	√	√
0018H	INTSR0	√	√	√	√	√	√	√
	INTCSI01	√	√	√	√	√	√	√
	INTIIC01	√	√	√	√	√	√	√
001AH	INTTRD0	√	√	√	√	√	√	√
001CH	INTTRD1	√	√	√	√	√	√	√
001EH	INTTRJ0	√	√	√	√	√	√	√
0020H	INTRAM	√	√	√	√	√	√	√
0022H	INTLIN0TRM	√	√	√	√	√	√	√
0024H	INTLIN0RVC	√	√	√	√	√	√	√
0026H	INTLIN0STA/INTLIN0	√	√	√	√	√	√	√
0028H	INTIICA0	√	√	√	√	√	–	–
002AH	INTP8	√	√	√	√	–	–	–
	INTRTC	√	√	√	√	√	√	√
002CH	INTTM00	√	√	√	√	√	√	√
002EH	INTTM01	√	√	√	√	√	√	√
0030H	INTTM02	√	√	√	√	√	√	√
0032H	INTTM03	√	√	√	√	√	√	√
0034H	INTAD	√	√	√	√	√	√	√
0036H	INTP6	√	√	√	√	–	–	–
	INTTM11H	√	√	√	√	√	√	–
0038H	INTP7	√	√	√	√	–	–	–
	INTTM13H	√	√	√	√	√	√	–
003AH	INTP9	√	√	√	√	–	–	–
	INTTM01H	√	√	√	√	√	√	√
003CH	INTP10	√	√	√	–	–	–	–
	INTTM03H	√	√	√	√	√	√	√
003EH	INTST1	√	√	√	√	√	√	–
	INTCSI10	√	√	√	√	√	√	–
	INTIIC10	√	√	√	√	√	√	–

Table 3-3. Vector Table (2/2)

Vector Table Address	Interrupt Source	100-pin	80-pin	64-pin	48-pin	32-pin	30-pin	20-pin
0040H	INTSR1	√	√	√	√	√	√	–
	INTCSI11	√	√	√	√	–	–	–
	INTIIC11	√	√	√	√	–	–	–
0042H	INTTM04	√	√	√	√	√	√	√
0044H	INTTM05	√	√	√	√	√	√	√
0046H	INTTM06	√	√	√	√	√	√	√
0048H	INTTM07	√	√	√	√	√	√	√
004AH	INTP11	√	√	√	–	–	–	–
	INTLIN0WUP	√	√	√	√	√	√	√
004CH	INTKR	√	√	√	√	√	√	√
004EH	INTCAN0ERR	√	√	√	√	√	√	–
0050H	INTCAN0WUP	√	√	√	√	√	√	–
0052H	INTCAN0CFR	√	√	√	√	√	√	–
0054H	INTCAN0TRM	√	√	√	√	√	√	–
0056H	INTCANGRFR	√	√	√	√	√	√	–
0058H	INTCANGERR	√	√	√	√	√	√	–
005AH	INTTM10	√	√	√	√	√	√	–
005CH	INTTM11	√	√	√	√	√	√	–
005EH	INTTM12	√	√	√	√	√	√	–
0060H	INTTM13	√	√	√	√	√	√	–
0062H	INTFL	√	√	√	√	√	√	√
0064H	INTP12	√	√	√	–	–	–	–
	INTLIN1WUP	√	√	√	√	–	–	–
0066H	INTLIN1TRM	√	√	√	√	–	–	–
0068H	INTLIN1RVC	√	√	√	√	–	–	–
006AH	INTLIN1STA/INTLIN1	√	√	√	√	–	–	–
006CH	INTTM14	√	√	√	√	–	–	–
006EH	INTTM15	√	√	√	√	–	–	–
0070H	INTTM16	√	√	√	√	–	–	–
0072H	INTTM17	√	√	√	√	–	–	–
007EH	BRK	√	√	√	√	√	√	√

(2) CALLT instruction table area

The 64-byte area 00080H to 000BFH can store the subroutine entry address of a 2-byte call instruction (CALLT). Set the subroutine entry address to a value in a range of 00000H to 0FFFFH (because an address code is 2 bytes).
To use the boot swap function, set a CALLT instruction table also at 02080H to 020BFH.

(3) Option byte area

A 4-byte area of 000C0H to 000C3H can be used as an option byte area. Set the option byte at 020C0H to 020C3H when the boot swap is used. For details, see **CHAPTER 29 OPTION BYTE**.

(4) On-chip debug security ID setting area

A 10-byte area of 000C4H to 000CDH and 020C4H to 020CDH can be used as an on-chip debug security ID setting area. Set the on-chip debug security ID of 10 bytes at 000C4H to 000CDH when the boot swap is not used and at 000C4H to 000CDH and at 020C4H to 020CDH when the boot swap is used. For details, see **CHAPTER 31 ON-CHIP DEBUG FUNCTION**.

3.1.2 Mirror area

The RL78/F13 and RL78/F14 mirror the code flash area of 00000H to 0FFFFH, to F0000H to FFFFFH. The products with 96 KB or more flash memory mirror the code flash area of 00000H to 0FFFFH or 10000H to 1FFFFH, to F0000H to FFFFFH (the code flash area to be mirrored is set by the processor mode control register (PMC)).

By reading data from F0000H to FFFFFH, an instruction that does not have the ES register as an operand can be used, and thus the contents of the code flash can be read with the shorter code. However, the code flash area is not mirrored to the SFR, extended SFR, RAM, data flash memory, and use prohibited areas.

See **3.1 Memory Space** for the mirror area of each product.

The mirror area can only be read and no instruction can be fetched from this area.

The following show examples.

Example R5F10AmE (m = 6, A, B, G, L) (Flash memory: 64 KB, RAM: 4 KB)

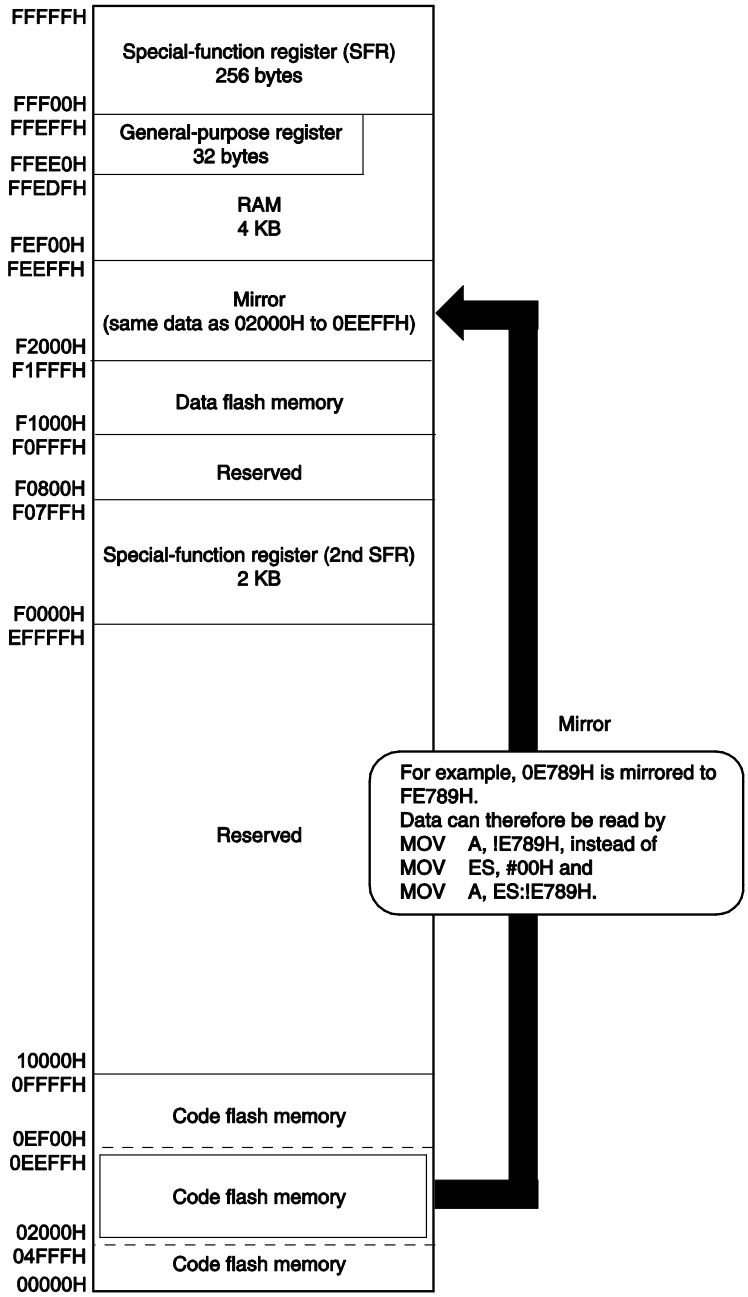

The PMC register is described below.

- **Processor mode control register (PMC)**

This register sets the flash memory space for mirroring to area from F0000H to FFFFFH.
The PMC register can be set by a 1-bit or 8-bit memory manipulation instruction.
Reset signal generation sets this register to 00H.

Figure 3-18. Format of Configuration of Processor Mode Control Register (PMC)

Address: FFFFEH After reset: 00H R/W

Symbol	7	6	5	4	3	2	1	<0>
PMC	0	0	0	0	0	0	0	MAA

MAA	Selection of flash memory space for mirroring to area from F0000H to FFFFFH
0	00000H to 0FFFFH is mirrored to F0000H to FFFFFH
1	10000H to 1FFFFH is mirrored to F0000H to FFFFFH Note

Note This setting is prohibited in products with 64 KB or less flash memory

Cautions 1. In products with 64 KB or less flash memory, be sure to clear bit 0 (MAA) of this register to 0 (default value).

2. Set the PMC register only once during the initial settings prior to operating the data transfer controller (DTC). Rewriting the PMC register other than during the initial settings is prohibited.

3. After setting the PMC register, wait for at least one instruction and access the mirror area.

3.1.3 Internal data memory space

The RL78/F13 and RL78/F14 products incorporate the following RAMs.

Table 3-4. Internal RAM Capacity

Part Number	Internal RAM
R5F10AmA (m = 6, A, B, G)	1 Kbyte (FFB00H to FFEFFH)
R5F10AmC (m = 6, A, B, G, L)	2 Kbytes (FF700H to FFEFFH)
R5F10BmC (m = A, B, G, L)	
R5F10AmD (m = 6, A, B, G, L)	3 Kbytes (FF300H to FFEFFH)
R5F10BmD (m = A, B, G, L)	
R5F10PmD (m = A, B, G)	4 Kbytes (FEF00H to FFEFFH)
R5F10AmE (m = 6, A, B, G, L, M)	
R5F10BmE (m = A, B, G, L, M)	
R5F10PmE (m = A, B, G, L, M, P)	6 Kbytes (FE700H to FFEFFH)
R5F10AmF (m = G, L, M)	
R5F10BmF (m = A, B, G, L, M)	
R5F10PmF (m = G, L, M, P)	8 Kbytes (FDF00H to FFEFFH)
R5F10AmG (m = G, L, M)	
R5F10BmG (m = A, B, G, L, M)	
R5F10PmG (m = G, L, M, P)	10 Kbytes (FD700H to FFEFFH)
R5F10PmH (m = G, L, M, P)	16 Kbytes (FBF00H to FFEFFH)
R5F10PmJ (m = G, L, M, P)	20 Kbytes (FAF00H to FFEFFH)

The internal RAM can be used as a data area and a program area where instructions are written and executed. Four general-purpose register banks consisting of eight 8-bit registers per bank are assigned to the 32-byte area of FFEE0H to FFEFFH of the internal RAM area. However, instructions cannot be executed by using the general-purpose registers.

The internal RAM is used as a stack memory.

Cautions 1. It is prohibited to use the general-purpose register (FFEE0H to FFEFFH) space for fetching instructions or as a stack area.

2. Do not allocate RAM addresses which are used as stack area, data buffers used by the libraries, branch destinations for vectored interrupt servicing, or DTC transfer destinations/transfer sources to the area FFE20H to FFEDFH when performing self-programming and rewriting the data flash memory.

3. Using the listed RAM areas in the corresponding products below is prohibited since the respective libraries use them in self-programming and overwriting of the data flash memory. However, the area to which this prohibition applies may vary with the version of the library. For details, refer to the manuals for the individual libraries.

R5F10AmE (m = 6, A, B, G, L): FEF00H to FF2FFH
R5F10PmF (m = G, L, M): FDF00H to FE2FFH
R5F10AmG (m = G, L, M), R5F10BnG (n = A, B, G, L, M): FDF00H to FE2FFH
R5F10PmJ (m = G, L, M, P): FAF00H to FB2FFH

3.1.4 Special function register (SFR) area

On-chip peripheral hardware special function registers (SFRs) are allocated in the area FFF00H to FFFFFH (see **Table 3-5 SFR List** in **3.2.4 Special function registers (SFRs)**).

Caution Do not access addresses to which SFRs are not assigned.

3.1.5 Extended special function register (2nd SFR: 2nd Special Function Register) area

On-chip peripheral hardware special function registers (2nd SFRs) are allocated in the area F0000H to F07FFH (see **Table 3-6 Extended SFR (2nd SFR) List** in **3.2.5 Extended special function registers (2nd SFRs: 2nd Special Function Registers)**).

SFRs other than those in the SFR area (FFF00H to FFFFFH) are allocated to this area. An instruction that accesses the extended SFR area, however, is 1 byte longer than an instruction that accesses the SFR area.

Caution Do not access addresses to which extended SFRs are not assigned.

3.1.6 Data memory addressing

Addressing refers to the method of specifying the address of the instruction to be executed next or the address of the register or memory relevant to the execution of instructions.

Several addressing modes are provided for addressing the memory relevant to the execution of instructions for the RL78/F13 and RL78/F14, based on operability and other considerations. For areas containing data memory in particular, special addressing methods designed for the functions of the special function registers (SFR) and general-purpose registers are available for use. Figures 3-19 to 3-35 show correspondence between data memory and addressing. For details of each addressing, see **3.4 Addressing for Processing Data Addresses**.

Figure 3-19. Correspondence between Data Memory and Addressing (R5F10AmA (m = 6, A, B, G))

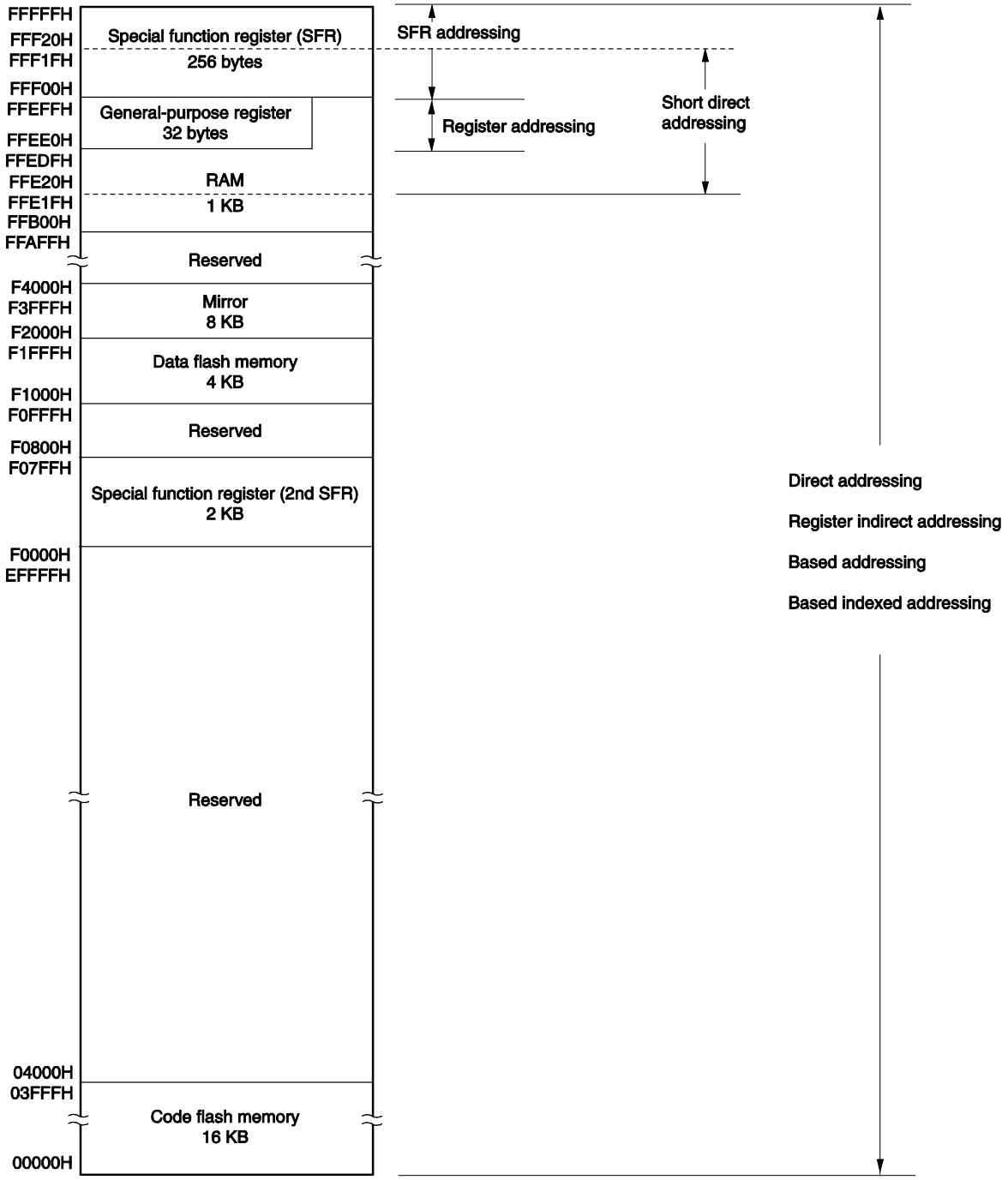

Caution When executing instructions from the RAM area, be sure to initialize the used RAM area + 10 bytes with any desired value.

Figure 3-20. Correspondence between Data Memory and Addressing (R5F10AmC (m = 6, A, B, G, L))

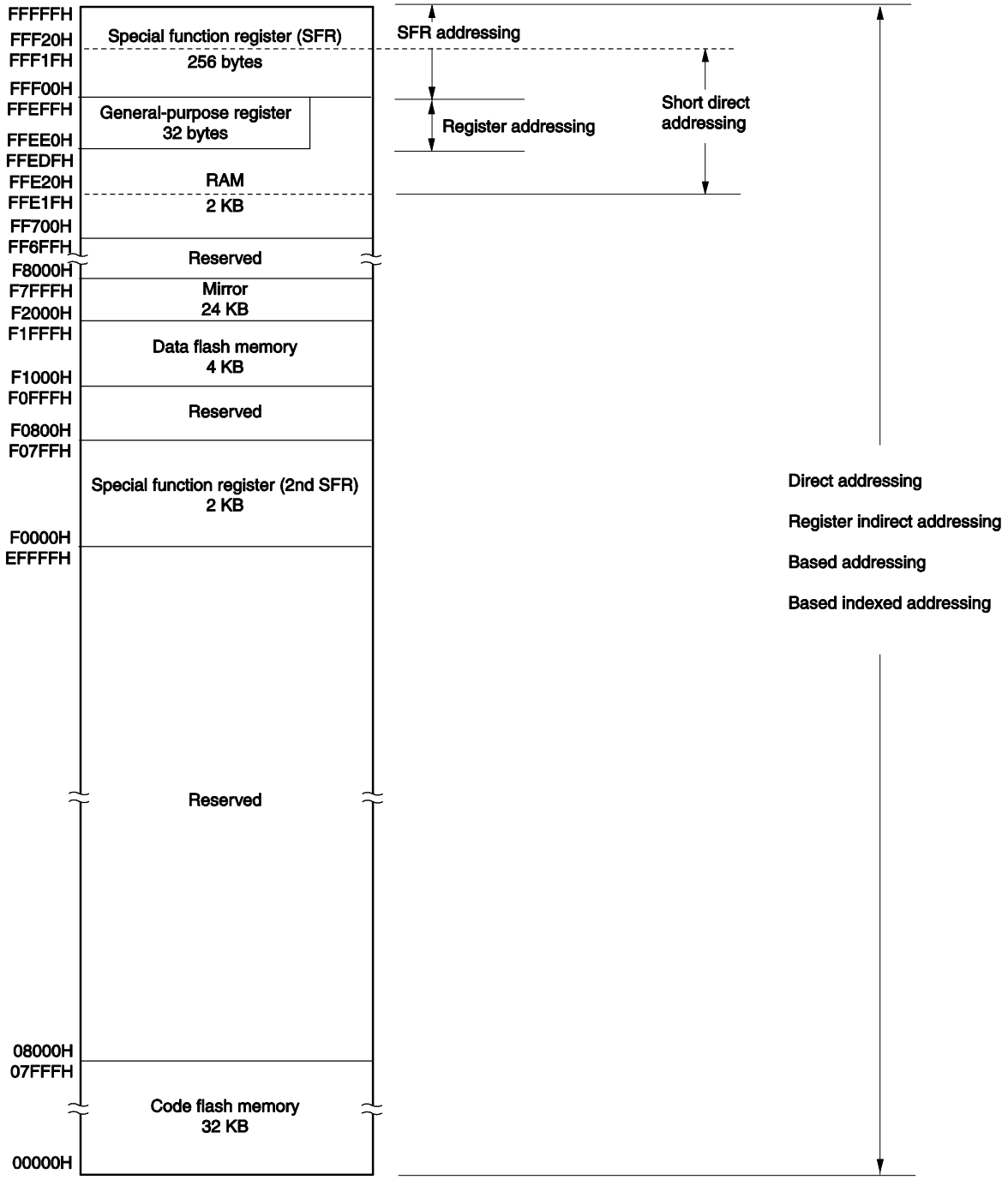

Caution When executing instructions from the RAM area, be sure to initialize the used RAM area + 10 bytes with any desired value.

Figure 3-21. Correspondence between Data Memory and Addressing (R5F10BmC (m = A, B, G, L))

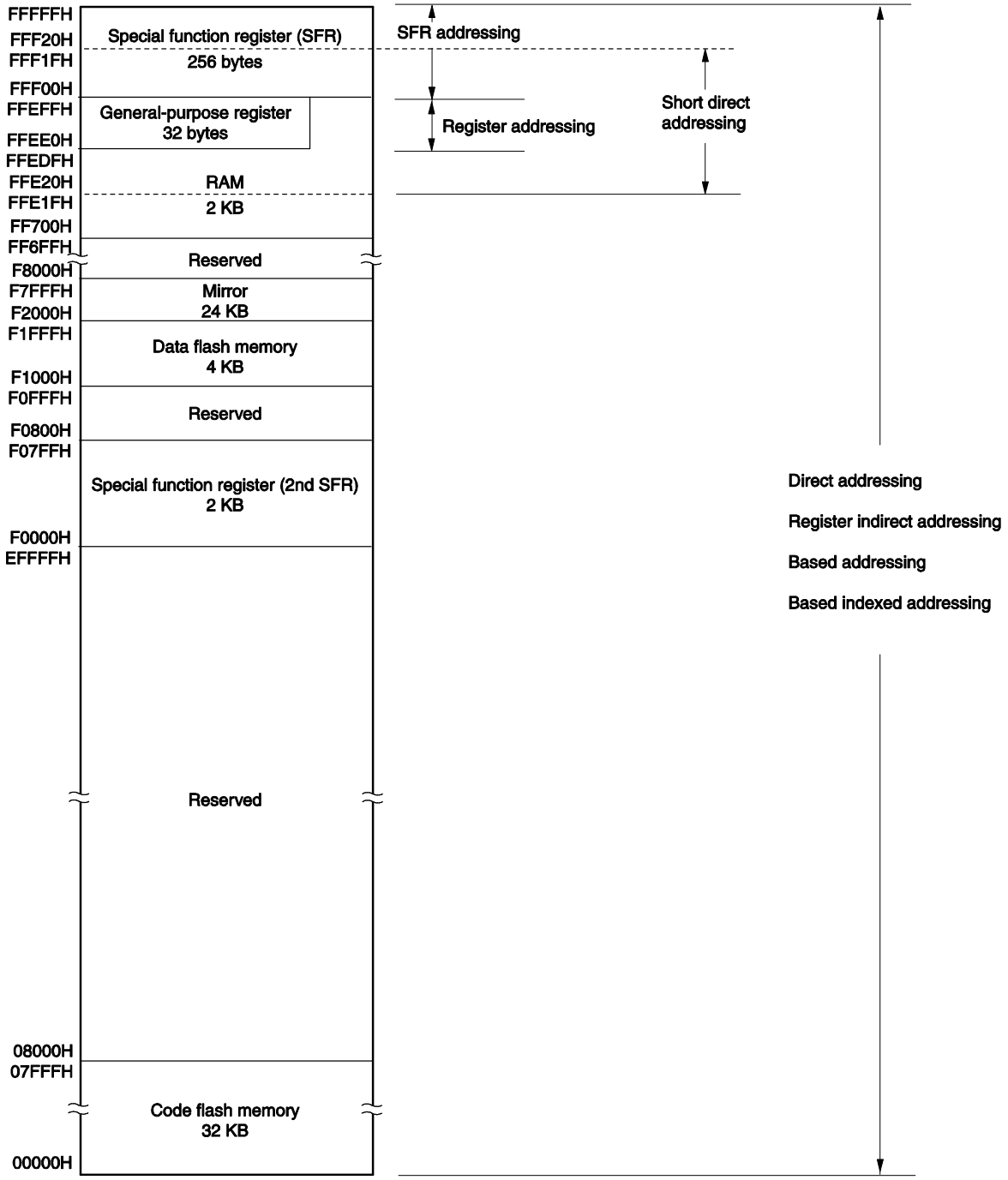

Caution When executing instructions from the RAM area, be sure to initialize the used RAM area + 10 bytes with any desired value.

Figure 3-22. Correspondence between Data Memory and Addressing (R5F10AmD (m = 6, A, B, G, L))

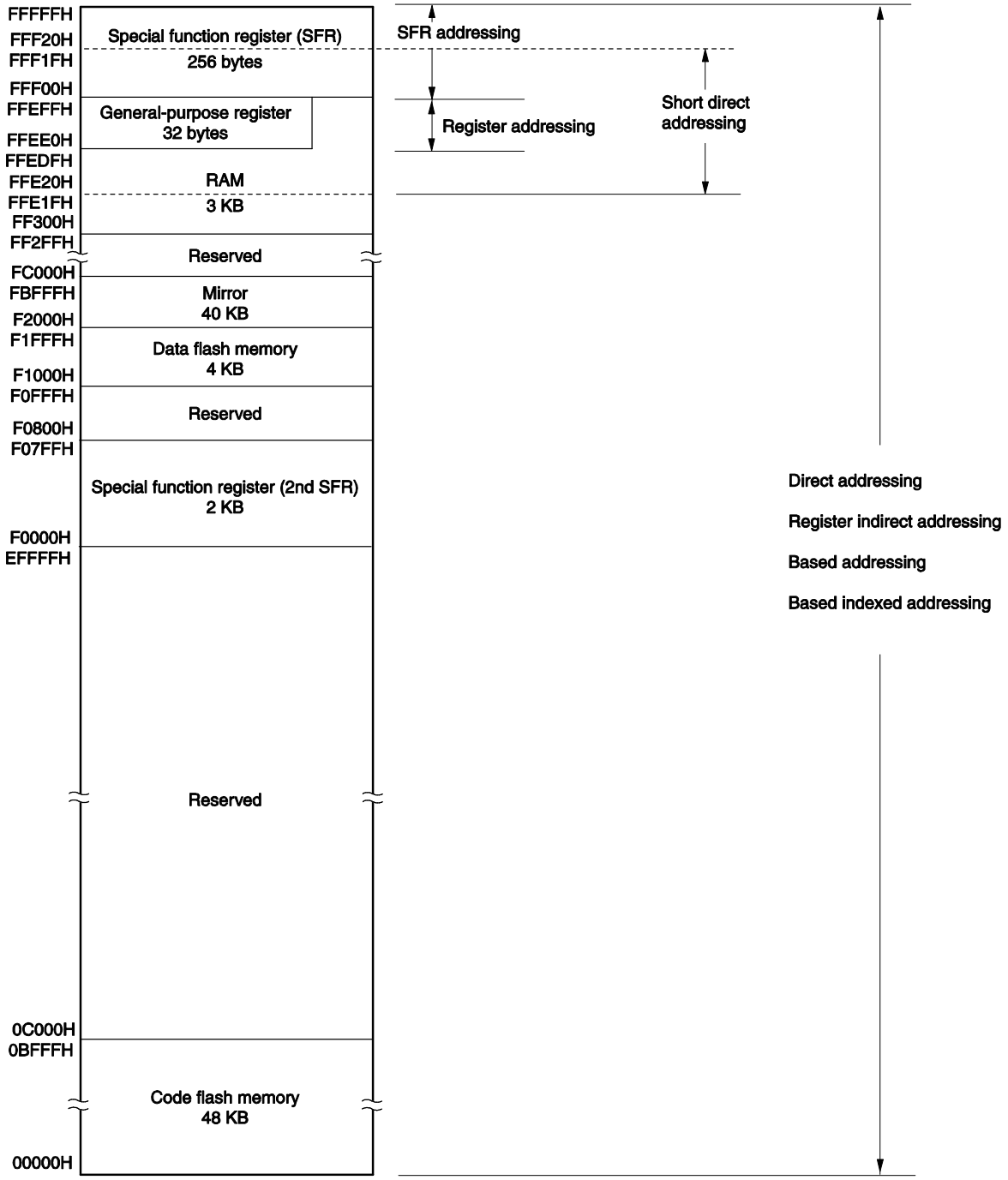

Caution When executing instructions from the RAM area, be sure to initialize the used RAM area + 10 bytes with any desired value.

Figure 3-23. Correspondence between Data Memory and Addressing (R5F10BmD (m = A, B, G, L))

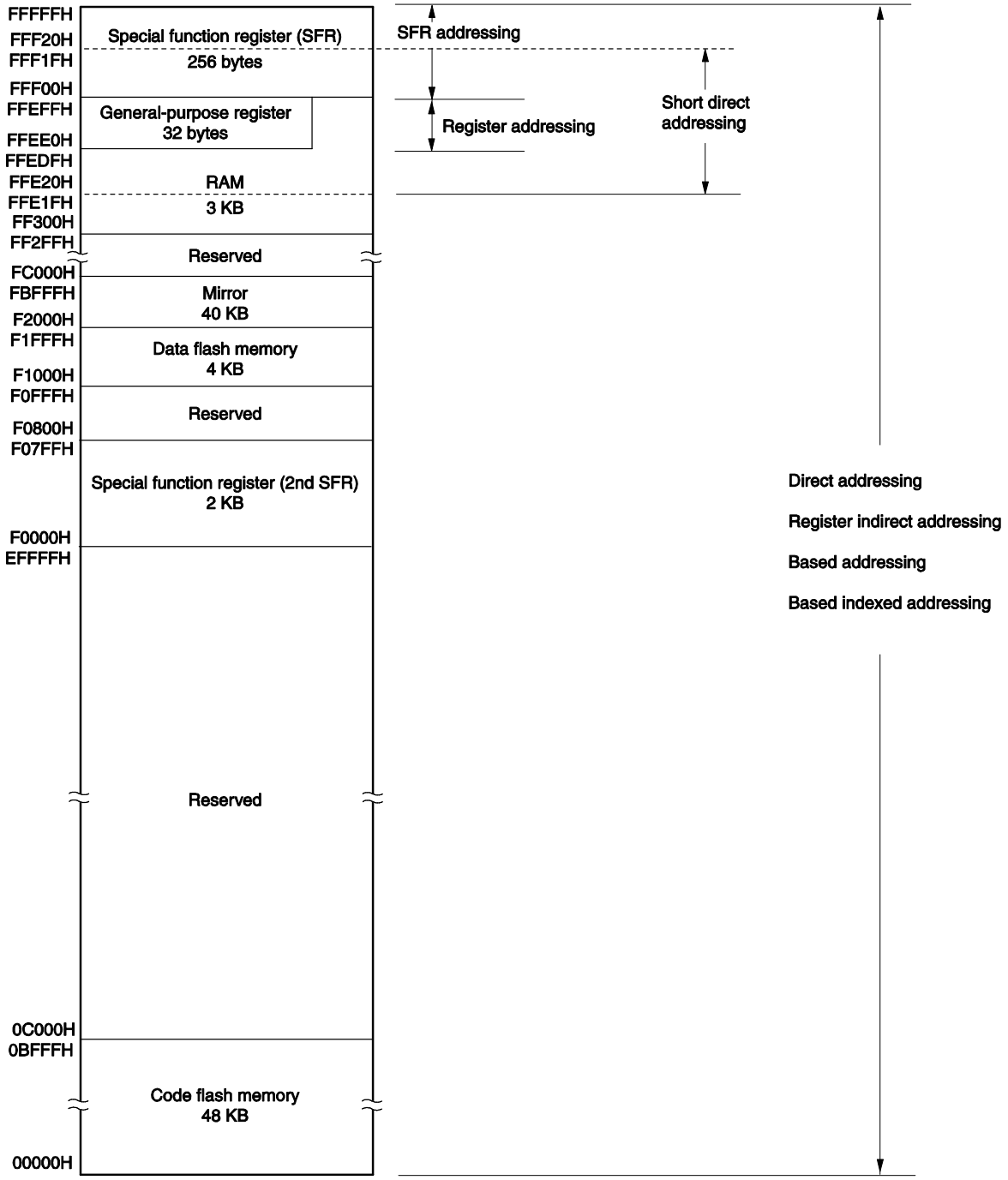

Caution When executing instructions from the RAM area, be sure to initialize the used RAM area + 10 bytes with any desired value.

Figure 3-24. Correspondence between Data Memory and Addressing (R5F10PmD (m = A, B, G))

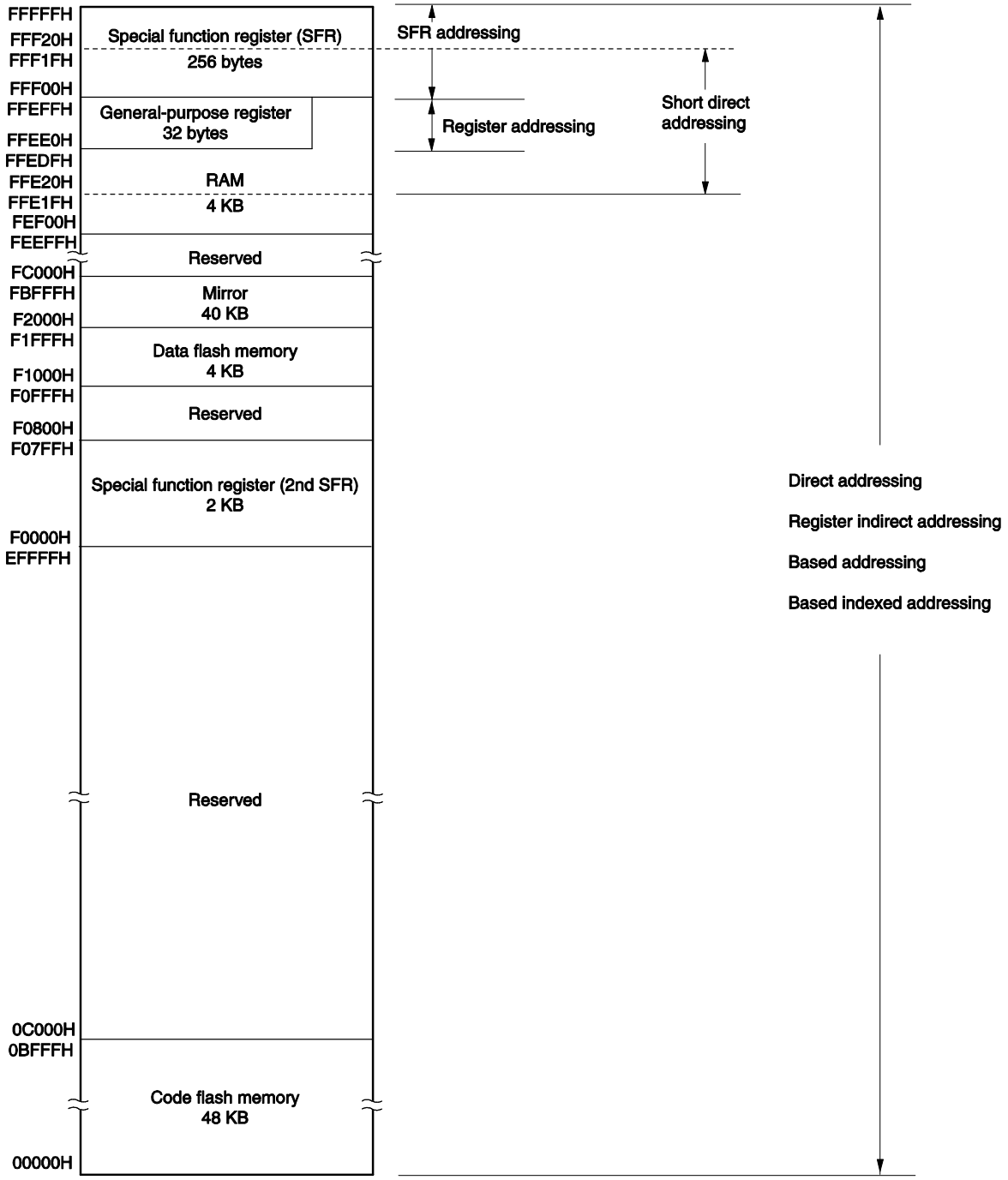

Caution When executing instructions from the RAM area, be sure to initialize the used RAM area + 10 bytes with any desired value.

Figure 3-25. Correspondence between Data Memory and Addressing (R5F10AmE (m = 6, A, B, G, L))

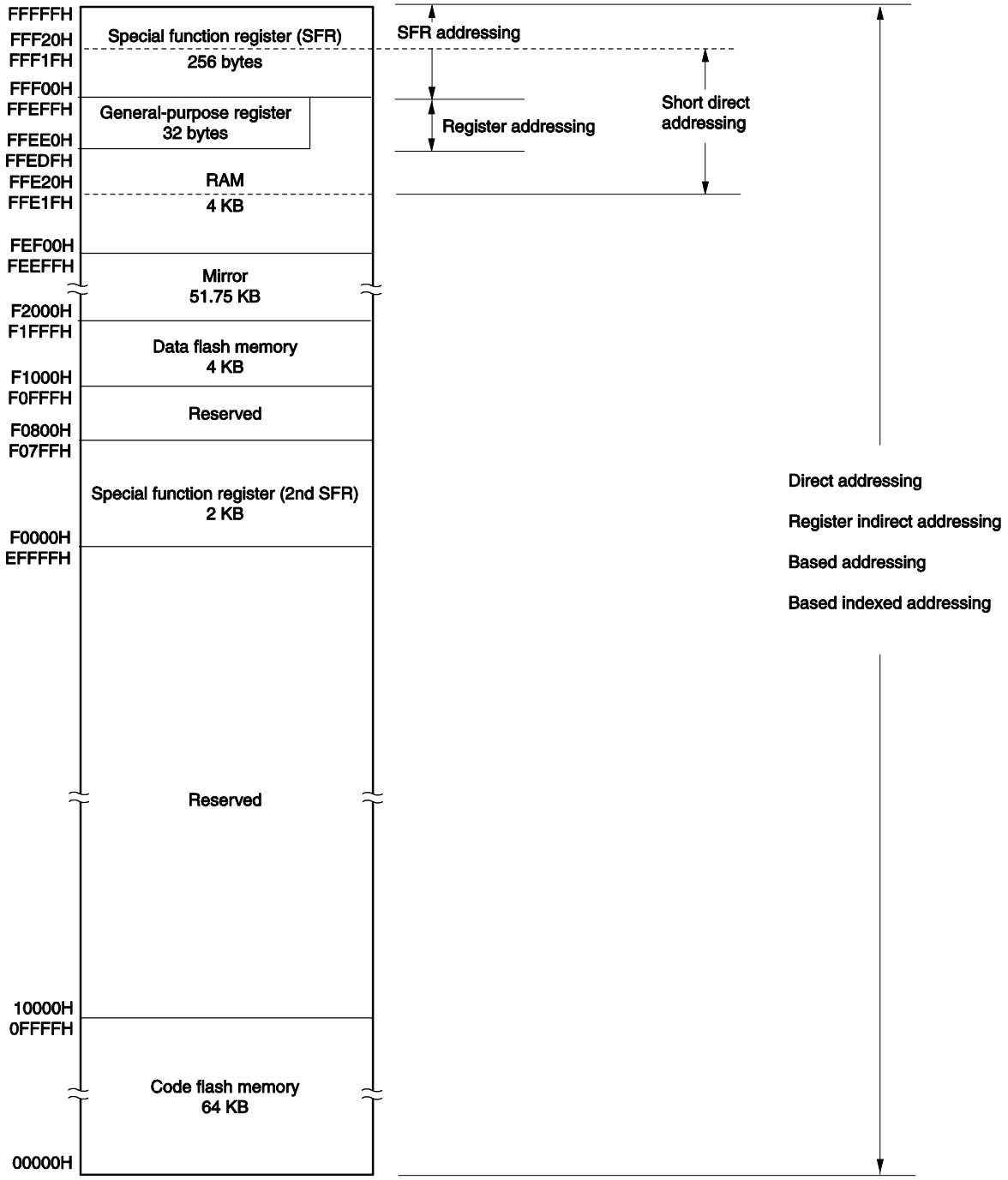

Caution When executing instructions from the RAM area, be sure to initialize the used RAM area + 10 bytes with any desired value.

Figure 3-26. Correspondence between Data Memory and Addressing (R5F10AmE, R5F10BmE (m = A, B, G, L, M))

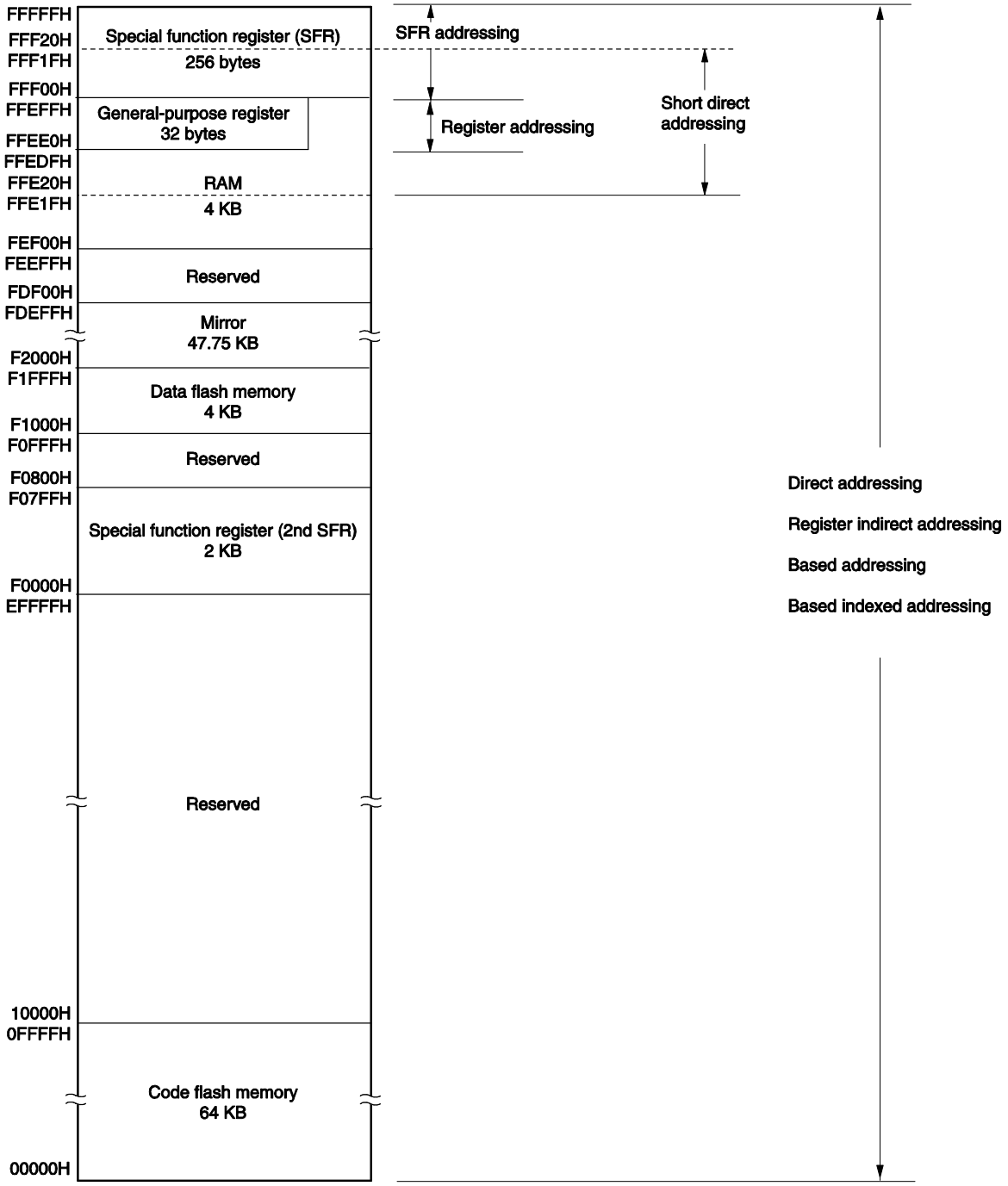

Caution When executing instructions from the RAM area, be sure to initialize the used RAM area + 10 bytes with any desired value.

Figure 3-27. Correspondence between Data Memory and Addressing (R5F10PmE (m = A, B, G, L, M))

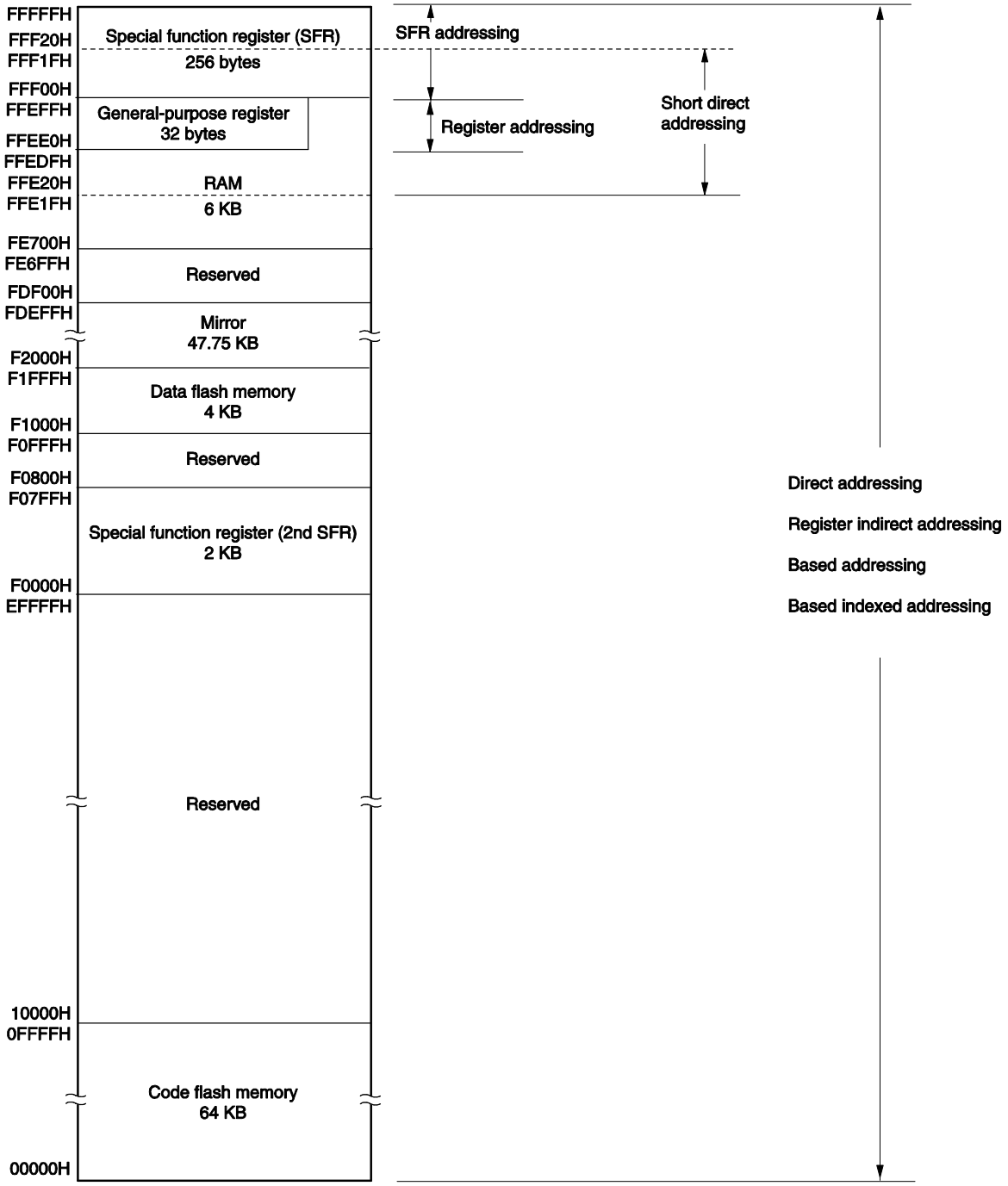

Caution When executing instructions from the RAM area, be sure to initialize the used RAM area + 10 bytes with any desired value.

Figure 3-28. Correspondence between Data Memory and Addressing (R5F10PPE)

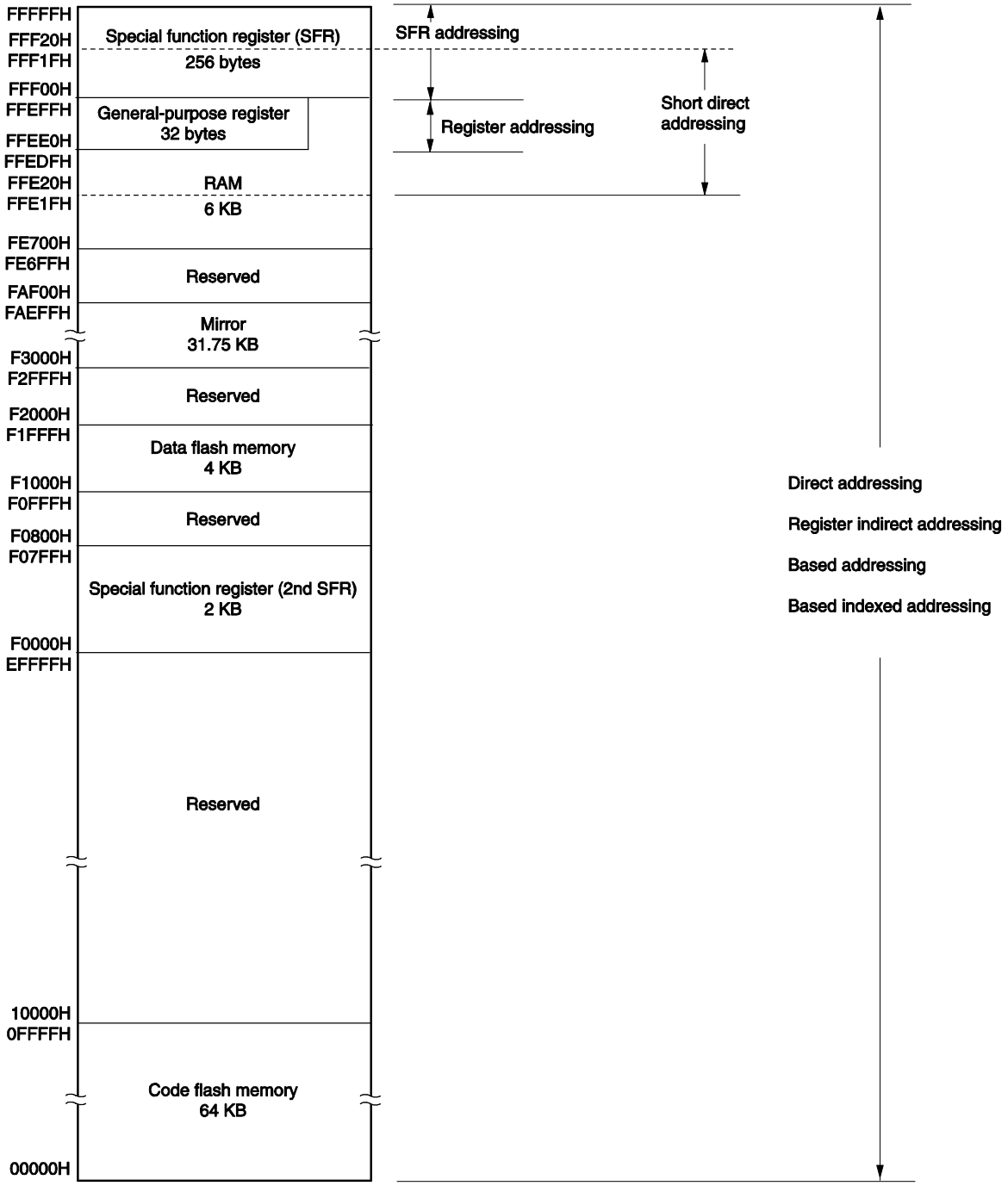

Caution When executing instructions from the RAM area, be sure to initialize the used RAM area + 10 bytes with any desired value.

Figure 3-29. Correspondence between Data Memory and Addressing (R5F10AmF (m = G, L, M), R5F10BnF (n = A, B, G, L, M))

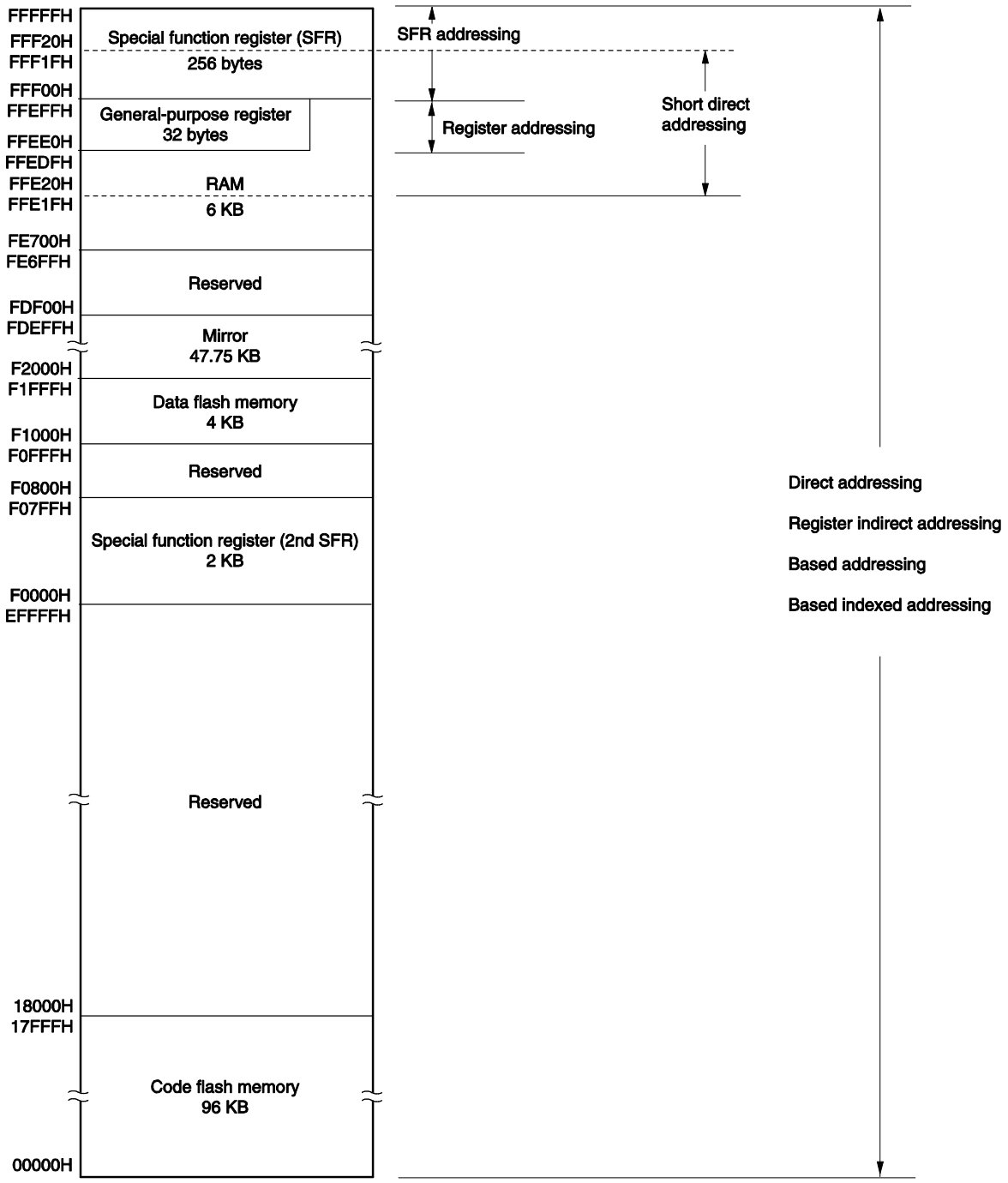

Caution **When executing instructions from the RAM area, be sure to initialize the used RAM area + 10 bytes with any desired value.**

Figure 3-30. Correspondence between Data Memory and Addressing (R5F10PmF (m = G, L, M))

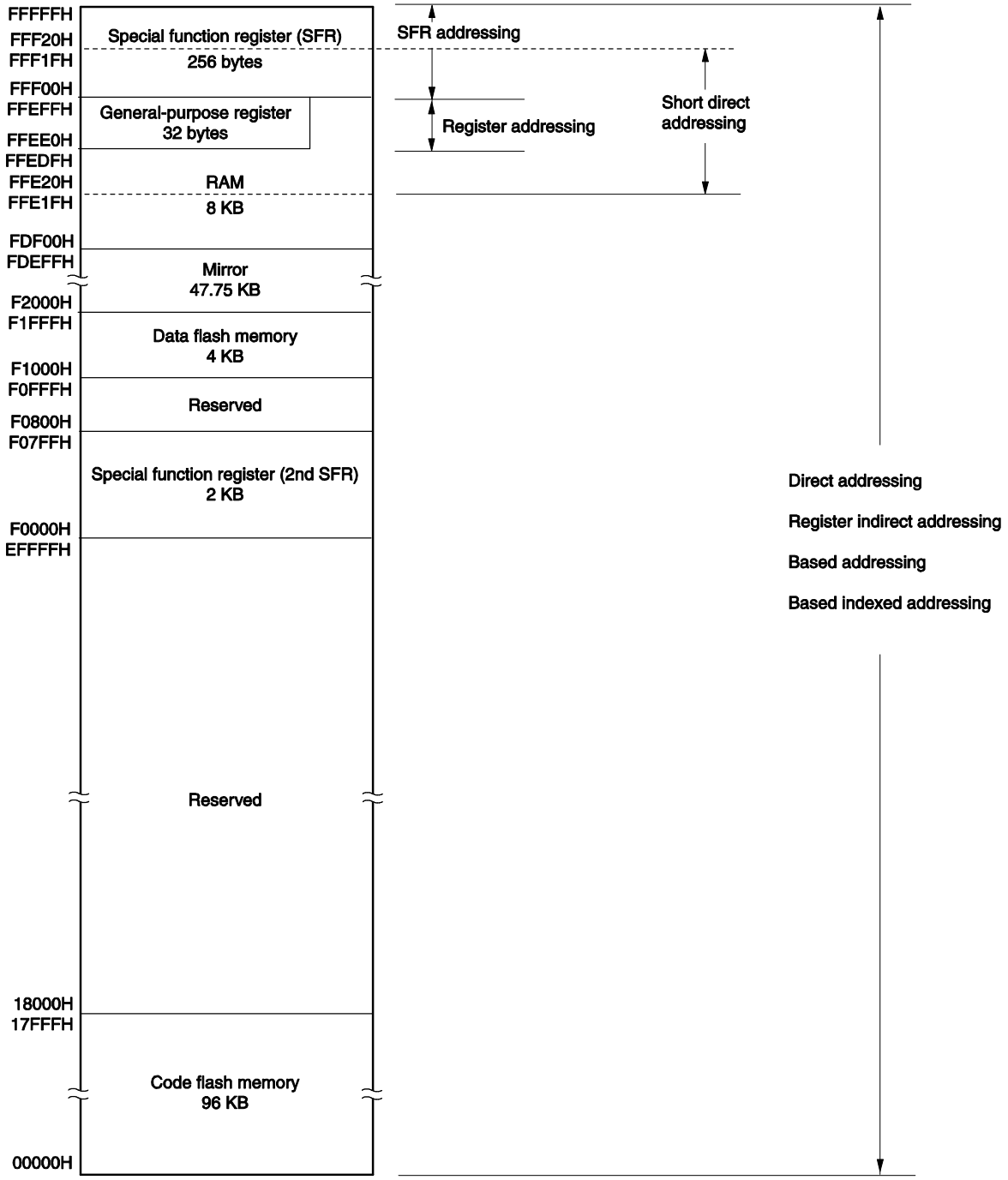

Caution When executing instructions from the RAM area, be sure to initialize the used RAM area + 10 bytes with any desired value.

Figure 3-31. Correspondence between Data Memory and Addressing (R5F10PPF)

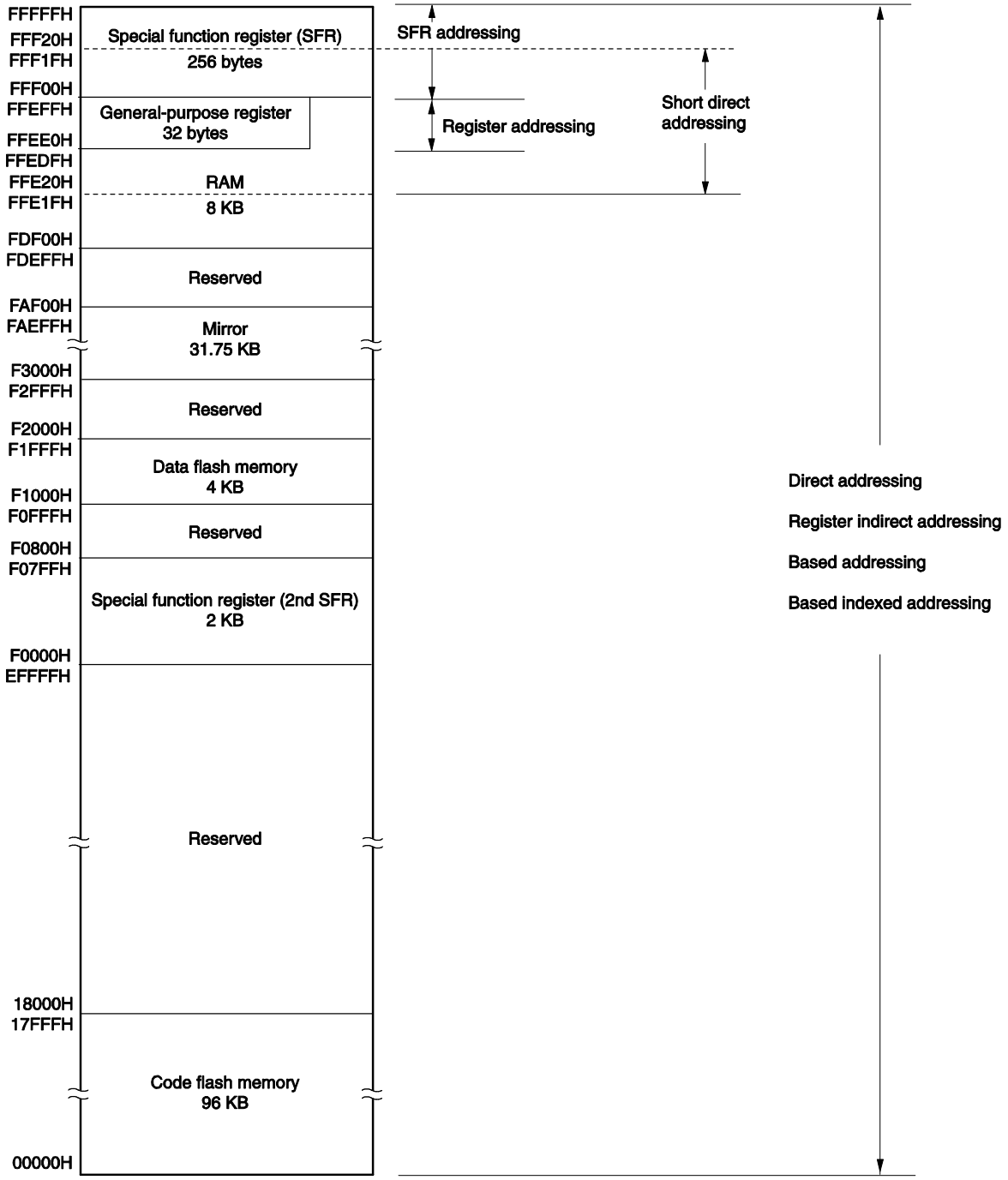

Caution When executing instructions from the RAM area, be sure to initialize the used RAM area + 10 bytes with any desired value.

Figure 3-32. Correspondence between Data Memory and Addressing (R5F10AmG (m = G, L, M), R5F10BnG (n = A, B, G, L, M))

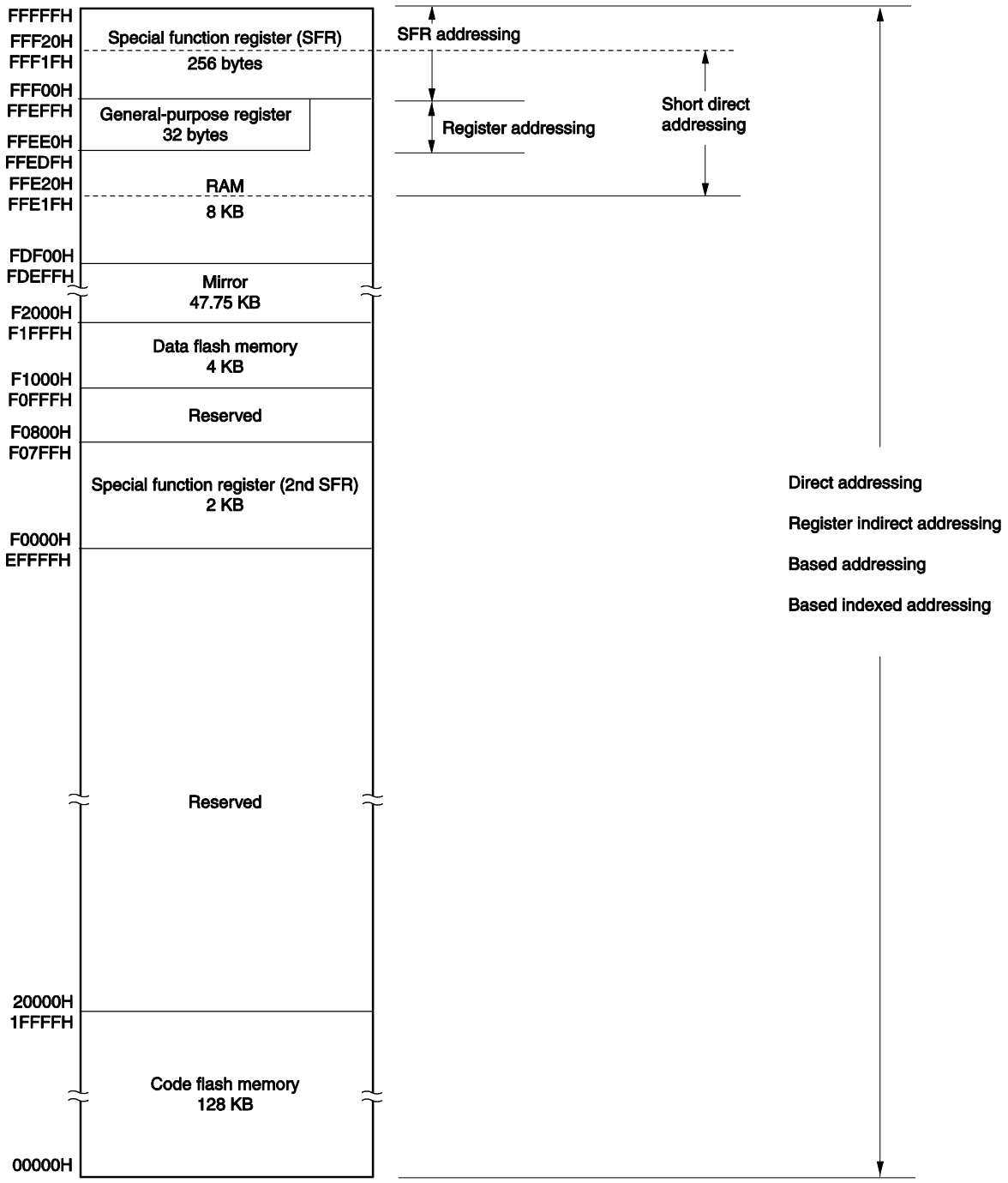

Caution When executing instructions from the RAM area, be sure to initialize the used RAM area + 10 bytes with any desired value.

Figure 3-33. Correspondence between Data Memory and Addressing (R5F10PmG (m = G, L, M, P))

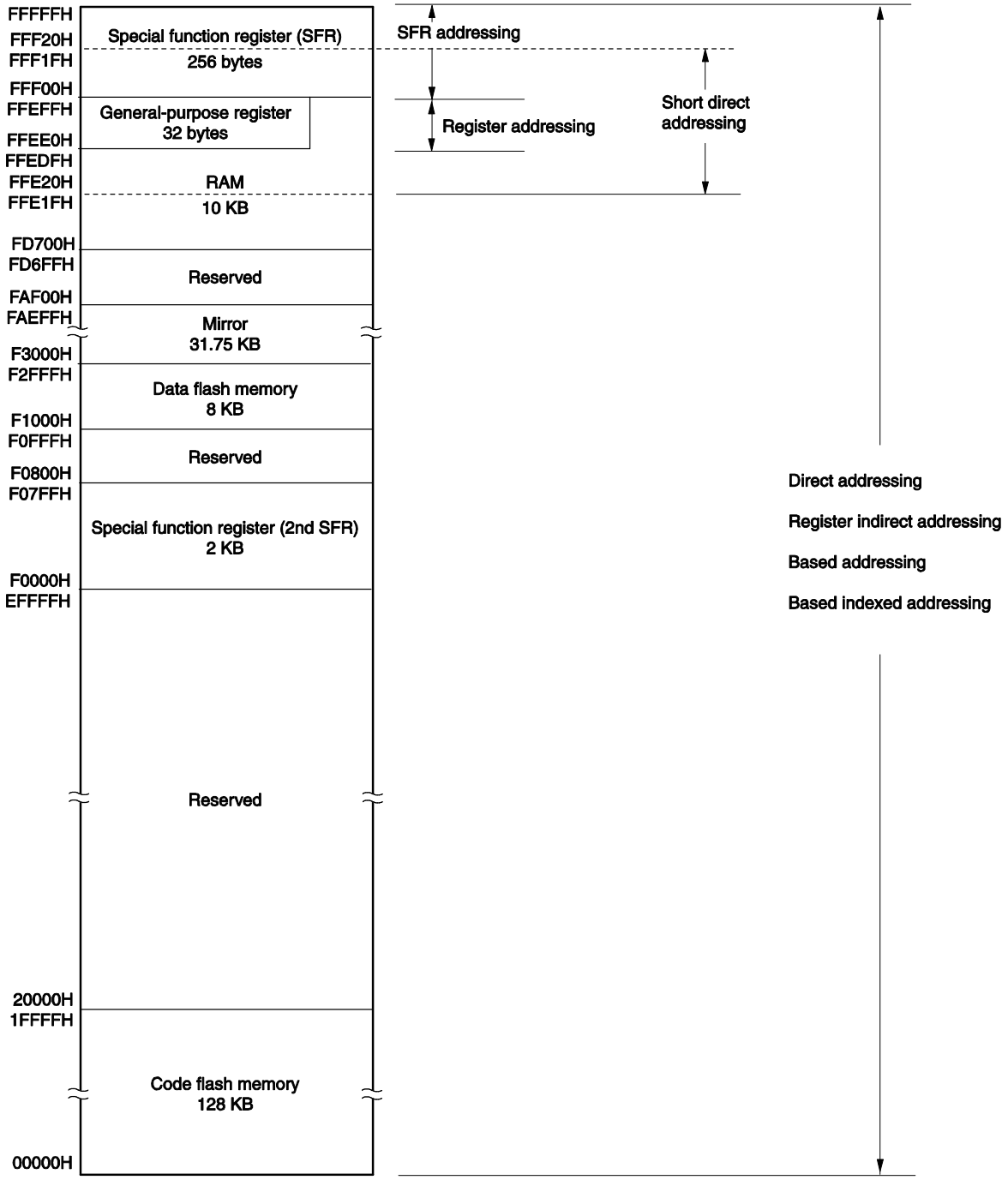

Caution When executing instructions from the RAM area, be sure to initialize the used RAM area + 10 bytes with any desired value.

Figure 3-34. Correspondence between Data Memory and Addressing (R5F10PmH (m = G, L, M, P))

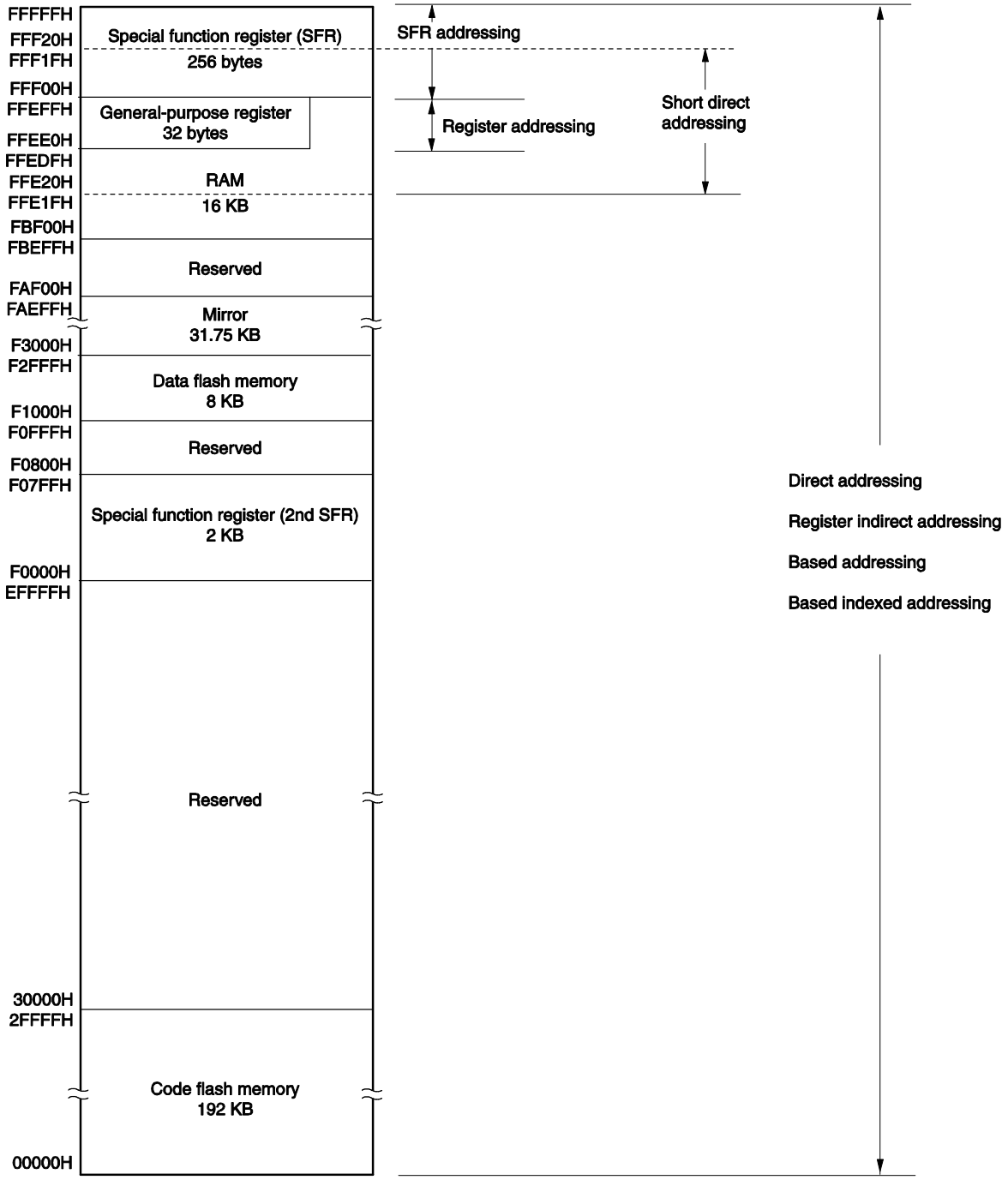

Caution When executing instructions from the RAM area, be sure to initialize the used RAM area + 10 bytes with any desired value.

Figure 3-35. Correspondence between Data Memory and Addressing (R5F10PmJ (m = G, L, M, P))

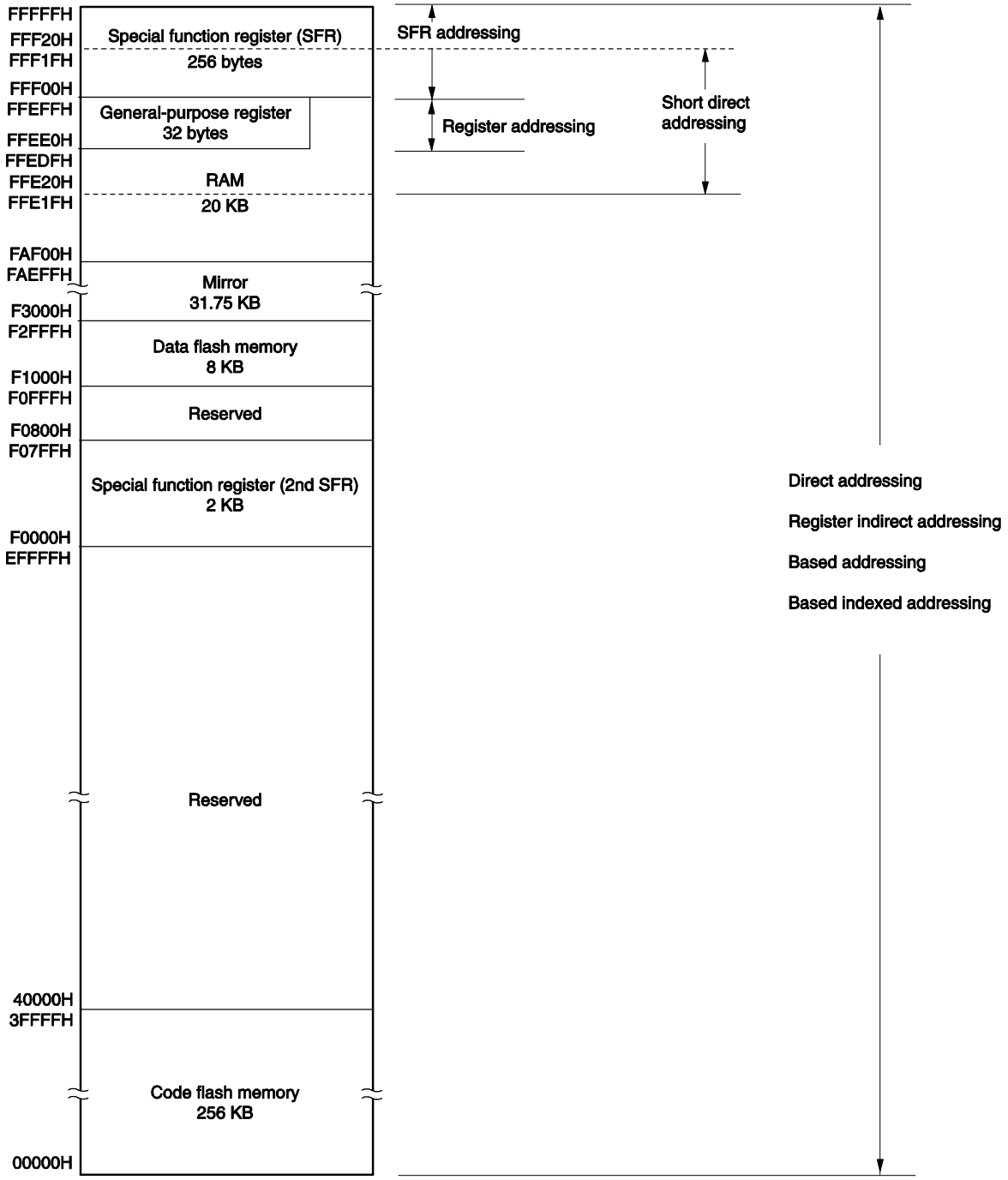

Caution When executing instructions from the RAM area, be sure to initialize the used RAM area + 10 bytes with any desired value.

3.2 Processor Registers

The RL78/F13 and RL78/F14 products incorporate the following processor registers.

3.2.1 Control registers

The control registers control the program sequence, statuses and stack memory. The control registers consist of a program counter (PC), a program status word (PSW) and a stack pointer (SP).

(1) Program counter (PC)

The program counter is a 20-bit register that holds the address information of the next program to be executed.

In normal operation, PC is automatically incremented according to the number of bytes of the instruction to be fetched.

When a branch instruction is executed, immediate data and register contents are set.

Reset signal generation sets the reset vector table values at addresses 0000H and 0001H to the program counter.

Figure 3-36. Format of Program Counter

	19															0
PC																

(2) Program status word (PSW)

The program status word is an 8-bit register consisting of various flags set/reset by instruction execution.

Program status word contents are stored in the stack area upon vectored interrupt request is acknowledged or PUSH PSW instruction execution and are restored upon execution of the RETB, RETI and POP PSW instructions.

Reset signal generation sets the PSW register to 06H.

Figure 3-37. Format of Program Status Word

	7							0
PSW	IE	Z	RBS1	AC	RBS0	ISP1	ISP0	CY

(a) Interrupt enable flag (IE)

This flag controls the interrupt request acknowledge operations of the CPU.

When 0, the IE flag is set to the interrupt disabled (DI) state, and all maskable interrupt requests are disabled.

When 1, the IE flag is set to the interrupt enabled (EI) state and interrupt request acknowledgment is controlled with an in-service priority flag (ISP1, ISP0), an interrupt mask flag for various interrupt sources, and a priority specification flag.

The IE flag is reset (0) upon DI instruction execution or interrupt acknowledgment and is set (1) upon EI instruction execution.

(b) Zero flag (Z)

When the operation result is zero, this flag is set (1). It is reset (0) in all other cases.

(c) Register bank select flags (RBS0, RBS1)

These are 2-bit flags to select one of the four register banks.

In these flags, the 2-bit information that indicates the register bank selected by SEL RBn instruction execution is stored.

(d) Auxiliary carry flag (AC)

If the operation result has a carry from bit 3 or a borrow at bit 3, this flag is set (1). It is reset (0) in all other cases.

(e) In-service priority flags (ISP1, ISP0)

This flag manages the priority of acknowledgeable maskable vectored interrupts. Vectored interrupt requests specified lower than the value of ISP0 and ISP1 flags by the priority specification flag registers (PRn0L, PRn0H, PRn1L, PRn1H, PRn2L, PRn2H, PRn3L) (see **21.3.3 Priority specification flag registers (PR00L, PR00H, PR01L, PR01H, PR02L, PR02H, PR03L, PR10L, PR10H, PR11L, PR11H, PR12L, PR12H, PR13L)**) can not be acknowledged.

Actual request acknowledgment is controlled by the interrupt enable flag (IE).

Remark n = 0, 1

(f) Carry flag (CY)

This flag stores overflow and underflow upon add/subtract instruction execution. It stores the shift-out value upon rotate instruction execution and functions as a bit accumulator during bit operation instruction execution.

(3) Stack pointer (SP)

This is a 16-bit register to hold the start address of the memory stack area. Only the internal RAM area can be set as the stack area.

Figure 3-38. Format of Stack Pointer

	15															0
SP	SP15	SP14	SP13	SP12	SP11	SP10	SP9	SP8	SP7	SP6	SP5	SP4	SP3	SP2	SP1	SP0

The SP is decremented ahead of write (save) to the stack memory and is incremented after read (restored) from the stack memory.

Each stack operation saves data as shown in Figure 3-39.

Cautions 1. Since reset signal generation makes the SP contents undefined, be sure to initialize the SP before using the stack.

2. It is prohibited to use the general-purpose register (FFEE0H to FFEFFH) space as a stack area.

3. The internal RAM in the following products cannot be used as stack memory when using the self-programming and data flash function. However, the area to which this prohibition applies may vary with the version of the library. For details, refer to the manual for the individual library.

R5F10AmE (m = 6, A, B, G, L):	**FEF00H to FF2FFH**
R5F10PmF (m = G, L, M):	**FDF00H to FE2FFH**
R5F10AmG (m = G, L, M), R5F10BnG (n = A, B, G, L, M):	**FDF00H to FE2FFH**
R5F10PmJ (m = G, L, M, P):	**FAF00H to FB2FFH**

4. The internal RAM in the following products cannot be used as stack memory when using the tracing function of on-chip debugging.

R5F10AmE (m = 6, A, B, G, L), R5F10AnD (n = 6, A, B, G, L):	**FF300H to FF37FH**
R5F10AmG (m = G, L, M), R5F10BnG (n = A, B, G, L, M):	**FE300H to FE4FFH**
R5F10PmF (m = G, L, M):	**FE300H to FE4FFH**
R5F10PmJ (m = G, L, M, P):	**FB300H to FB4FFH**

5. The internal RAM in the following products cannot be used as stack memory when the hot plug-in function is used or when the DTC is in use for the RRM or DMM function.

R5F10AmD, R5F10AmE (m = 6, A, B, G, L):	**FF400H to FF42FH**
R5F10AmG (m = G, L, M), R5F10BnG (n = A, B, G, L, M):	**FE500H to FE52FH**

R5F10PmF (m = G, L, M): **FE500H to FE52FH**
R5F10PmJ (m = G, L, M, P): **FB500H to FB52FH**

Figure 3-39. Data to Be Saved to Stack Memory

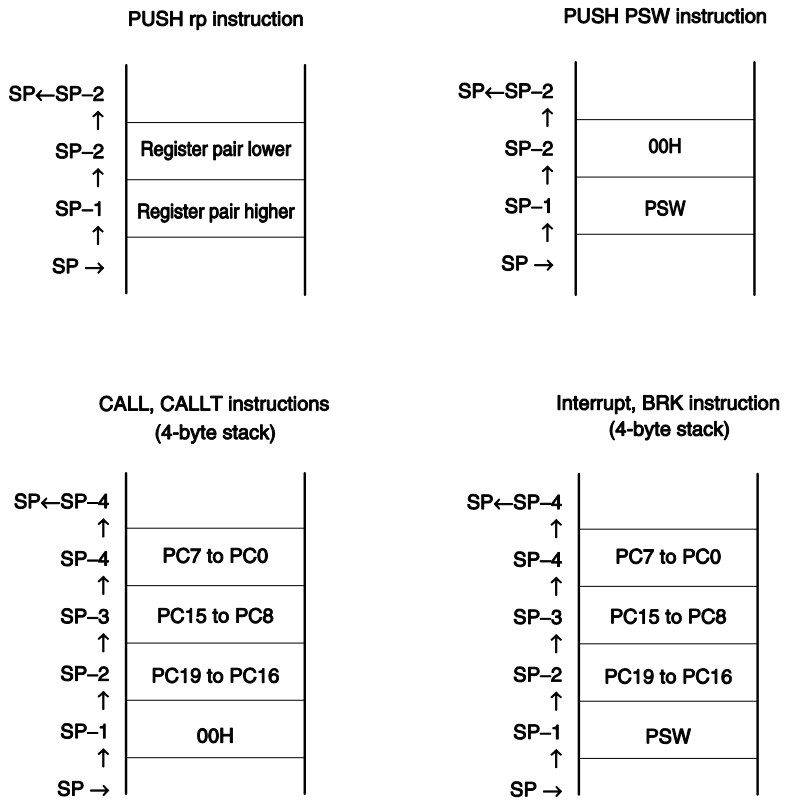

3.2.2 General-purpose registers

General-purpose registers are mapped at particular addresses (FFEE0H to FFEFFH) of the data memory. The general-purpose registers consists of 4 banks, each bank consisting of eight 8-bit registers (X, A, C, B, E, D, L, and H).

Each register can be used as an 8-bit register, and two 8-bit registers can also be used in a pair as a 16-bit register (AX, BC, DE, and HL).

These registers can be described in terms of function names (X, A, C, B, E, D, L, H, AX, BC, DE, and HL) and absolute names (R0 to R7 and RP0 to RP3).

Register banks to be used for instruction execution are set by the CPU control instruction (SEL RBn). Because of the 4-register bank configuration, an efficient program can be created by switching between a register for normal processing and a register for interrupts for each bank.

Caution It is prohibited to use the general-purpose register (FFEE0H to FFEFFH) space for fetching instructions or as a stack area.

Figure 3-40. Configuration of General-Purpose Registers

(a) Function name

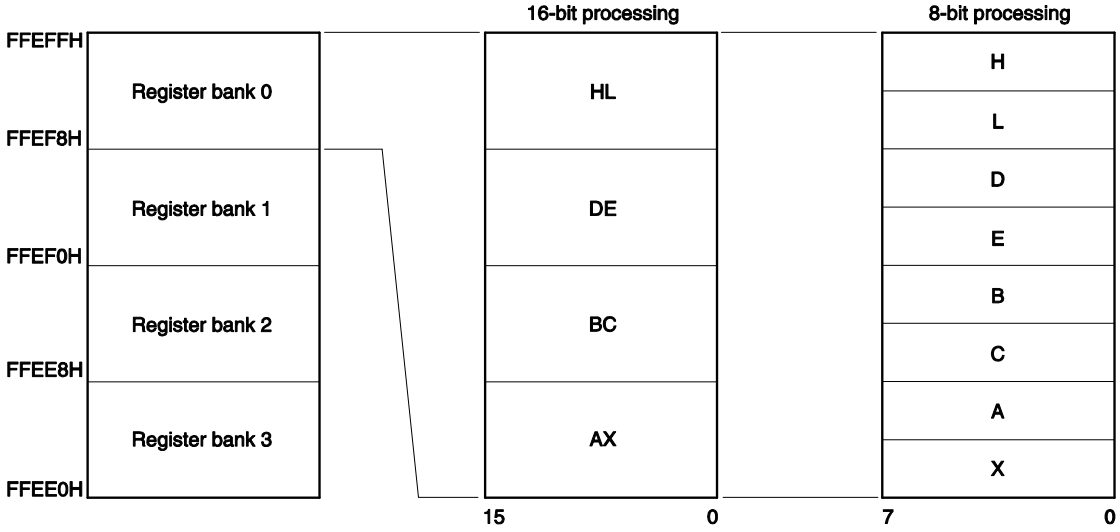

(b) Absolute name

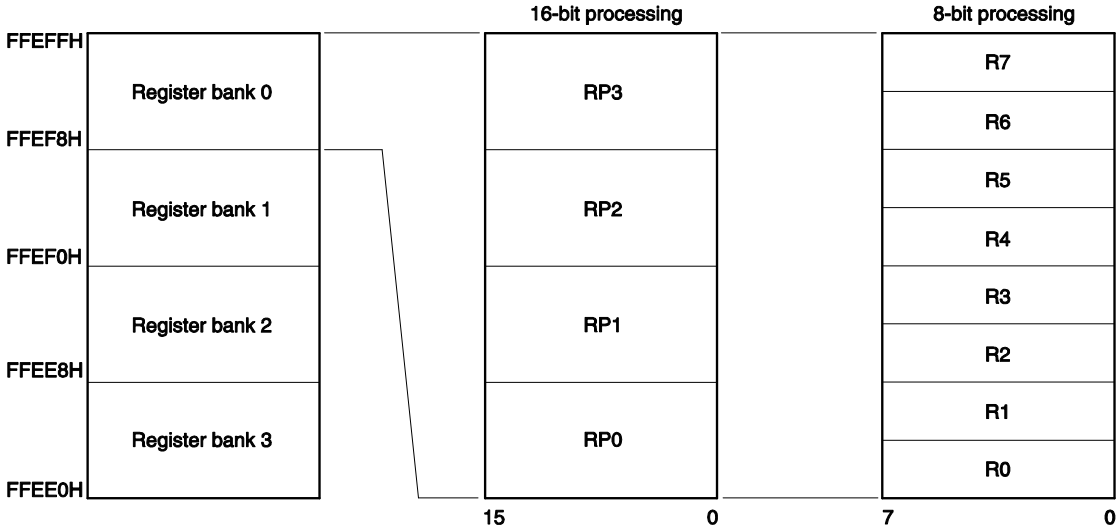

3.2.3 ES and CS registers

The ES register is used for data access and the CS register is used to specify the higher address when a branch instruction is executed.

The default value of the ES register after reset is 0FH, and that of the CS register is 00H.

Figure 3-41. Configuration of ES and CS Registers

<R>

	7	6	5	4	3	2	1	0
ES	0	0	0	0	ES3	ES2	ES1	ES0

	7	6	5	4	3	2	1	0
CS	0	0	0	0	CS3	CS2	CS1	CS0

3.2.4 Special function registers (SFRs)

Unlike a general-purpose register, each SFR has a special function.

SFRs are allocated to the FFF00H to FFFFFH area.

SFRs can be manipulated like general-purpose registers, using operation, transfer, and bit manipulation instructions. The manipulable bit units, 1, 8, and 16, depend on the SFR type.

Each manipulation bit unit can be specified as follows.

- 1-bit manipulation
  Describe the symbol reserved by the assembler for the 1-bit manipulation instruction operand (sfr.bit).
  This manipulation can also be specified with an address.
- 8-bit manipulation
  Describe the symbol reserved by the assembler for the 8-bit manipulation instruction operand (sfr).
  This manipulation can also be specified with an address.
- 16-bit manipulation
  Describe the symbol reserved by the assembler for the 16-bit manipulation instruction operand (sfrp).
  When specifying an address, describe an even address.

Table 3-5 gives a list of the SFRs. The meanings of items in the table are as follows.

- Symbol
  This item indicates the address of a special function register. It is a reserved word in the assembler, and is defined as an sfr variable using the #pragma sfr directive in the compiler. When using the assembler, debugger, and simulator, symbols can be written as an instruction operand.
- R/W
  This item indicates whether the corresponding SFR can be read or written.
  R/W: Read/write enable
  R: Read only
  W: Write only
- Manipulable bit units
  "√" indicates the manipulable bit unit (1, 8, or 16). "–" indicates a bit unit for which manipulation is not possible.
- After reset
  This item indicates each register status upon reset signal generation.

Caution Do not access addresses to which SFRs are not assigned.

Remark For extended SFRs (2nd SFRs), see **3.2.5 Extended special function registers (2nd SFRs: 2nd Special Function Registers)**.

Table 3-5. SFR List (1/4)

Address	Special Function Register (SFR) Name	Symbol		R/W	Manipulable Bit Range			After Reset
					1-bit	8-bit	16-bit	
FFF00H	Port register 0	P0		R/W	√	√	–	00H
FFF01H	Port register 1	P1		R/W	√	√	–	00H
FFF03H	Port register 3	P3		R/W	√	√	–	00H
FFF04H	Port register 4	P4		R/W	√	√	–	00H
FFF05H	Port register 5	P5		R/W	√	√	–	00H
FFF06H	Port register 6	P6		R/W	√	√	–	00H
FFF07H	Port register 7	P7		R/W	√	√	–	00H
FFF08H	Port register 8	P8		R/W	√	√	–	00H
FFF09H	Port register 9	P9		R/W	√	√	–	00H
FFF0AH	Port register 10	P10		R/W	√	√	–	00H
FFF0CH	Port register 12	P12		R/W	√	√	–	Undefined
FFF0DH	Port register 13	P13		R/W	√	√	–	Undefined Note
FFF0EH	Port register 14	P14		R/W	√	√	–	00H
FFF0FH	Port register 15	P15		R/W	√	√	–	00H
FFF10H	Serial data register 00	SDR00L	SDR00	R/W	–	√	√	0000H
FFF11H		–			–	–		
FFF12H	Serial data register 01	SDR01L	SDR01	R/W	–	√	√	0000H
FFF13H		–			–	–		
FFF18H	Timer data register 00	TDR00		R/W	–	–	√	0000H
FFF19H								
FFF1AH	Timer data register 01	TDR01L	TDR01	R/W	–	√	√	00H
FFF1BH		TDR01H			–	√		00H
FFF1EH	10-bit A/D conversion result register	ADCR		R	–	–	√	0000H
FFF1FH	8-bit A/D conversion result register	ADCRH		R	–	√	–	00H
FFF20H	Port mode register 0	PM0		R/W	√	√	–	FFH
FFF21H	Port mode register 1	PM1		R/W	√	√	–	FFH
FFF23H	Port mode register 3	PM3		R/W	√	√	–	FFH
FFF24H	Port mode register 4	PM4		R/W	√	√	–	FFH
FFF25H	Port mode register 5	PM5		R/W	√	√	–	FFH
FFF26H	Port mode register 6	PM6		R/W	√	√	–	FFH
FFF27H	Port mode register 7	PM7		R/W	√	√	–	FFH
FFF28H	Port mode register 8	PM8		R/W	√	√	–	FFH
FFF29H	Port mode register 9	PM9		R/W	√	√	–	FFH
FFF2AH	Port mode register 10	PM10		R/W	√	√	–	FFH
FFF2CH	Port mode register 12	PM12		R/W	√	√	–	FFH
FFF2EH	Port mode register 14	PM14		R/W	√	√	–	FFH
FFF2FH	Port mode register 15	PM15		R/W	√	√	–	FFH
FFF30H	A/D converter mode register 0	ADM0		R/W	√	√	–	00H
FFF31H	Analog input channel specification register	ADS		R/W	√	√	–	00H
FFF32H	A/D converter mode register 1	ADM1		R/W	√	√	–	00H
FFF34H	D/A conversion value setting register 0	DACS0		R/W	–	√	–	00H

Note P130 bit depends on the setting of User Option Byte (000C2H/020C2H).

Table 3-5. SFR List (2/4)

Address	Special Function Register (SFR) Name	Symbol		R/W	Manipulable Bit Range			After Reset
					1-bit	8-bit	16-bit	
FFF36H	D/A converter mode register	DAM		R/W	√	√	–	00H
FFF37H	Key return mode register	KRM		R/W	√	√	–	00H
FFF38H	External interrupt rising edge enable register 0	EGP0		R/W	√	√	–	00H
FFF39H	External interrupt falling edge enable register 0	EGN0		R/W	√	√	–	00H
FFF3AH	External interrupt rising edge enable register 1	EGP1		R/W	√	√	–	00H
FFF3BH	External interrupt falling edge enable register 1	EGN1		R/W	√	√	–	00H
FFF48H	Serial data register 10	SDR10L	SDR10	R/W	–	√	√	0000H
FFF49H		–			–	–		
FFF4AH	Serial data register 11	SDR11L	SDR11	R/W	–	√	√	0000H
FFF4BH		–			–	–		
FFF50H	IICA shift register 0	IICA0		R/W	–	√	–	00H
FFF51H	IICA status register 0	IICS0		R	√	√	–	00H
FFF52H	IICA flag register 0	IICF0		R/W	√	√	–	00H
FFF54H	16-bit watch error correction register	SUBCUDW		R/W	–	–	√	0000H
FFF55H								
FFF58H	Timer RD general register C0	TRDGRC0		R/W	–	–	√	FFFFH Note
FFF59H								
FFF5AH	Timer RD general register D0	TRDGRD0		R/W	–	–	√	FFFFH Note
FFF5BH								
FFF5CH	Timer RD general register C1	TRDGRC1		R/W	–	–	√	FFFFH Note
FFF5DH								
FFF5EH	Timer RD general register D1	TRDGRD1		R/W	–	–	√	FFFFH Note
FFF5FH								
FFF64H	Timer data register 02	TDR02		R/W	–	–	√	0000H
FFF65H								
FFF66H	Timer data register 03	TDR03L	TDR03	R/W	–	√	√	00H
FFF67H		TDR03H			–	√		00H
FFF68H	Timer data register 04	TDR04		R/W	–	–	√	0000H
FFF69H								
FFF6AH	Timer data register 05	TDR05		R/W	–	–	√	0000H
FFF6BH								
FFF6CH	Timer data register 06	TDR06		R/W	–	–	√	0000H
FFF6DH								
FFF6EH	Timer data register 07	TDR07		R/W	–	–	√	0000H
FFF6FH								

Note The timer RD SFRs are undefined when FRQSEL4 = 1 in the user option byte (000C2H/020C2H) and TRD0EN = 0 in the PER1 register. If it is necessary to read the initial value, set f_{CLK} to f_{IH} and TRD0EN = 1 before reading.

Table 3-5. SFR List (3/4)

Address	Special Function Register (SFR) Name	Symbol		R/W	Manipulable Bit Range			After Reset
					1-bit	8-bit	16-bit	
FFF70H	Timer data register 10	TDR10		R/W	–	–	√	0000H
FFF71H								
FFF72H	Timer data register 11	TDR11L	TDR11	R/W	–	√	√	00H
FFF73H		TDR11H			–	√		00H
FFF74H	Timer data register 12	TDR12		R/W	–	–	√	0000H
FFF75H								
FFF76H	Timer data register 13	TDR13L	TDR13	R/W	–	√	√	00H
FFF77H		TDR13H			–	√		00H
FFF78H	Timer data register 14	TDR14		R/W	–	–	√	0000H
FFF79H								
FFF7AH	Timer data register 15	TDR15		R/W	–	–	√	0000H
FFF7BH								
FFF7CH	Timer data register 16	TDR16		R/W	–	–	√	0000H
FFF7DH								
FFF7EH	Timer data register 17	TDR17		R/W	–	–	√	0000H
FFF7FH								
FFF92H	Second count register	SEC		R/W	–	√	–	00H
FFF93H	Minute count register	MIN		R/W	–	√	–	00H
FFF94H	Hour count register	HOUR		R/W	–	√	–	12H Note 1
FFF95H	Week count register	WEEK		R/W	–	√	–	00H
FFF96H	Day count register	DAY		R/W	–	√	–	01H
FFF97H	Month count register	MONTH		R/W	–	√	–	01H
FFF98H	Year count register	YEAR		R/W	–	√	–	00H
FFF99H	Watch error correction register	SUBCUD		R/W	–	√	–	00H
FFF9AH	Alarm minute register	ALARMWM		R/W	–	√	–	00H
FFF9BH	Alarm hour register	ALARMWH		R/W	–	√	–	12H
FFF9CH	Alarm week register	ALARMWW		R/W	–	√	–	00H
FFF9DH	Real-time clock control register 0	RTCC0		R/W	√	√	–	00H
FFF9EH	Real-time clock control register 1	RTCC1		R/W	√	√	–	00H
FFFA0H	Clock operation mode control register	CMC		R/W	–	√	–	00H
FFFA1H	Clock operation status control register	CSC		R/W	√	√	–	C0H
FFFA2H	Oscillation stabilization time counter status register	OSTC		R	√	√	–	00H
FFFA3H	Oscillation stabilization time select register	OSTS		R/W	–	√	–	07H
FFFA4H	System clock control register	CKC		R/W	√	√	–	00H
FFFA5H	Clock output select register 0	CKS0		R/W	√	√	–	00H
FFFA8H	Reset control flag register	RESF		R	–	√	–	Undefined Note 2
FFFA9H	Voltage detection register	LVIM		R/W	√	√	–	00H Note 3

Notes 1. The value of this register is 00H if the AMPM bit (bit 3 of real-time clock control register 0 (RTCC0)) is set to 1 after reset.

2. The reset value of the RESF register varies depending on the reset source.

3. The reset value of the LVIM register varies depending on the reset source.

Table 3-5. SFR List (4/4)

<R>

Address	Special Function Register (SFR) Name	Symbol		R/W	Manipulable Bit Range			After reset
					1-bit	8-bit	16-bit	
FFFAAH	Voltage detection level register	LVIS		R/W	√	√	–	00H/01H/81H Note 1
FFFABH	Watchdog timer enable register	WDTE		R/W	–	√	–	1AH/9AH Note 2
FFFACH	CRC input register	CRCIN		R/W	–	√	–	00H
FFFD0H	Interrupt request flag register 2L	IF2L	IF2	R/W	√	√	√	00H
FFFD1H	Interrupt request flag register 2H	IF2H		R/W	√	√		00H
FFFD2H	Interrupt request flag register 3L	IF3L		R/W	√	√	–	00H
FFFD4H	Interrupt mask flag register 2L	MK2L	MK2	R/W	√	√	√	FFH
FFFD5H	Interrupt mask flag register 2H	MK2H		R/W	√	√		FFH
FFFD6H	Interrupt mask flag register 3L	MK3L		R/W	√	√	–	FFH
FFFD8H	Priority specification flag register 02L	PR02L	PR02	R/W	√	√	√	FFH
FFFD9H	Priority specification flag register 02H	PR02H		R/W	√	√		FFH
FFFDAH	Priority specification flag register 03L	PR03L		R/W	√	√	–	FFH
FFFDCH	Priority specification flag register 12L	PR12L	PR12	R/W	√	√	√	FFH
FFFDDH	Priority specification flag register 12H	PR12H		R/W	√	√		FFH
FFFDEH	Priority specification flag register 13L	PR13L		R/W	√	√	–	FFH
FFFE0H	Interrupt request flag register 0L	IF0L	IF0	R/W	√	√	√	00H
FFFE1H	Interrupt request flag register 0H	IF0H		R/W	√	√		00H
FFFE2H	Interrupt request flag register 1L	IF1L	IF1	R/W	√	√	√	00H
FFFE3H	Interrupt request flag register 1H	IF1H		R/W	√	√		00H
FFFE4H	Interrupt mask flag register 0L	MK0L	MK0	R/W	√	√	√	FFH
FFFE5H	Interrupt mask flag register 0H	MK0H		R/W	√	√		FFH
FFFE6H	Interrupt mask flag register 1L	MK1L	MK1	R/W	√	√	√	FFH
FFFE7H	Interrupt mask flag register 1H	MK1H		R/W	√	√		FFH
FFFE8H	Priority specification flag register 00L	PR00L	PR00	R/W	√	√	√	FFH
FFFE9H	Priority specification flag register 00H	PR00H		R/W	√	√		FFH
FFFEAH	Priority specification flag register 01L	PR01L	PR01	R/W	√	√	√	FFH
FFFEBH	Priority specification flag register 01H	PR01H		R/W	√	√		FFH
FFFECH	Priority specification flag register 10L	PR10L	PR10	R/W	√	√	√	FFH
FFFEDH	Priority specification flag register 10H	PR10H		R/W	√	√		FFH
FFFEEH	Priority specification flag register 11L	PR11L	PR11	R/W	√	√	√	FFH
FFFEFH	Priority specification flag register 11H	PR11H		R/W	√	√		FFH
FFFF0H	Multiply and accumulation register (L)	MACRL		R/W	–	–	√	0000H
FFFF1H								
FFFF2H	Multiply and accumulation register (H)	MACRH		R/W	–	–	√	0000H
FFFF3H								
FFFFEH	Processor mode control register	PMC		R/W	√	√	–	00H

Notes 1. The reset value of the LVIS register varies depending on the reset source and the setting of the option byte.

2. The reset value of the WDTE register is determined by the setting of the option byte.

Remark For extended SFRs (2nd SFRs), see **Table 3-6 Extended SFR (2nd SFR) List**.

3.2.5 Extended special function registers (2nd SFRs: 2nd Special Function Registers)

Unlike a general-purpose register, each extended SFR (2nd SFR) has a special function.

Extended SFRs are allocated to the F0000H to F07FFH area. SFRs other than those in the SFR area (FFF00H to FFFFFH) are allocated to this area. An instruction that accesses the extended SFR area, however, is 1 byte longer than an instruction that accesses the SFR area.

Extended SFRs can be manipulated like general-purpose registers, using operation, transfer, and bit manipulation instructions. The manipulable bit units, 1, 8, and 16, depend on the SFR type.

Each manipulation bit unit can be specified as follows.

- 1-bit manipulation
  Describe the symbol reserved by the assembler for the 1-bit manipulation instruction operand (laddr16.bit). This manipulation can also be specified with an address.
- 8-bit manipulation
  Describe the symbol reserved by the assembler for the 8-bit manipulation instruction operand (laddr16). This manipulation can also be specified with an address.
- 16-bit manipulation
  Describe the symbol reserved by the assembler for the 16-bit manipulation instruction operand (laddr16s). When specifying an address, describe an even address.

Table 3-6 gives a list of the extended SFRs. The meanings of items in the table are as follows.

- Symbol
  This item indicates the address of an extended SFR. It is a reserved word in the assembler, and is defined as an sfr variable using the #pragma sfr directive in the compiler. When using the assembler, debugger, and simulator, symbols can be written as an instruction operand.
- R/W
  This item indicates whether the corresponding extended SFR can be read or written.
  R/W: Read/write enable
  R: Read only
  W: Write only
- Manipulable bit units
  "√" indicates the manipulable bit unit (1, 8, or 16). "–" indicates a bit unit for which manipulation is not possible.
- After reset
  This item indicates each register status upon reset signal generation.

Caution Do not access addresses to which extended SFRs are not assigned.

Remark For SFRs in the SFR area, see **3.2.4 Special function registers (SFRs)**.

Table 3-6. Extended SFR (2nd SFR) List (1/32)

Address	Special Function Register (2nd SFR) Name	Symbol	R/W	Manipulable Bit Range			After reset
				1-bit	8-bit	16-bit	
F0010H	A/D converter mode register 2	ADM2	R/W	√	√	–	00H
F0011H	Conversion result comparison upper limit setting register	ADUL	R/W	–	√	–	FFH
F0012H	Conversion result comparison lower limit setting register	ADLL	R/W	–	√	–	00H
F0013H	A/D test register	ADTES	R/W	–	√	–	00H
F0016H	Peripheral I/O redirection register 0	PIOR0	R/W	–	√	–	00H
F0017H	Peripheral I/O redirection register 1	PIOR1	R/W	–	√	–	00H
F0018H	Peripheral I/O redirection register 2	PIOR2	R/W	–	√	–	00H
F0019H	Peripheral I/O redirection register 3	PIOR3	R/W	–	√	–	00H
F001AH	Peripheral I/O redirection register 4	PIOR4	R/W	–	√	–	00H
F001BH	Peripheral I/O redirection register 5	PIOR5	R/W	–	√	–	00H
F001CH	Peripheral I/O redirection register 6	PIOR6	R/W	–	√	–	00H
F001DH	Peripheral I/O redirection register 7	PIOR7	R/W	–	√	–	00H
F001EH	Peripheral I/O redirection register 8	PIOR8	R/W	–	√	–	00H
F0021H	Port input threshold control register 1	PITHL1	R/W	√	√	–	00H
F0023H	Port input threshold control register 3	PITHL3	R/W	√	√	–	00H
F0024H	Port input threshold control register 4	PITHL4	R/W	√	√	–	00H
F0025H	Port input threshold control register 5	PITHL5	R/W	√	√	–	00H
F0026H	Port input threshold control register 6	PITHL6	R/W	√	√	–	00H
F0027H	Port input threshold control register 7	PITHL7	R/W	√	√	–	00H
F002AH	Port input threshold control register 10	PITHL10	R/W	√	√	–	00H
F002CH	Port input threshold control register 12	PITHL12	R/W	√	√	–	00H
F002FH	Port input threshold control register 15	PITHL15	R/W	√	√	–	00H
F0030H	Pull-up resistor option register 0	PU0	R/W	√	√	–	00H
F0031H	Pull-up resistor option register 1	PU1	R/W	√	√	–	00H
F0033H	Pull-up resistor option register 3	PU3	R/W	√	√	–	00H
F0034H	Pull-up resistor option register 4	PU4	R/W	√	√	–	01H
F0035H	Pull-up resistor option register 5	PU5	R/W	√	√	–	00H
F0036H	Pull-up resistor option register 6	PU6	R/W	√	√	–	00H
F0037H	Pull-up resistor option register 7	PU7	R/W	√	√	–	00H
F0039H	Pull-up resistor option register 9	PU9	R/W	√	√	–	00H
F003AH	Pull-up resistor option register 10	PU10	R/W	√	√	–	00H
F003CH	Pull-up resistor option register 12	PU12	R/W	√	√	–	00H
F003EH	Pull-up resistor option register 14	PU14	R/W	√	√	–	00H
F003FH	Pull-up resistor option register 15	PU15	R/W	√	√	–	00H
F0041H	Port input mode register 1	PIM1	R/W	√	√	–	00H
F0043H	Port input mode register 3	PIM3	R/W	√	√	–	00H
F0045H	Port input mode register 5	PIM5	R/W	√	√	–	00H
F0046H	Port input mode register 6	PIM6	R/W	√	√	–	00H
F0047H	Port input mode register 7	PIM7	R/W	√	√	–	00H
F004CH	Port input mode register 12	PIM12	R/W	√	√	–	00H
F0051H	Port output mode register 1	POM1	R/W	√	√	–	00H
F0056H	Port output mode register 6	POM6	R/W	√	√	–	00H
F0057H	Port output mode register 7	POM7	R/W	√	√	–	00H

Table 3-6. Extended SFR (2nd SFR) List (2/32)

Address	Special Function Register (2nd SFR) Name	Symbol		R/W	Manipulable Bit Range			After reset
					1-bit	8-bit	16-bit	
F005CH	Port output mode register 12	POM12		R/W	√	√	–	00H
F0067H	Port mode control register 7	PMC7		R/W	√	√	–	FFH
F0069H	Port mode control register 9	PMC9		R/W	√	√	–	FFH
F006CH	Port mode control register 12	PMC12		R/W	√	√	–	FFH
F0070H	Noise filter enable register 0	NFEN0		R/W	√	√	–	00H
F0071H	Noise filter enable register 1	NFEN1		R/W	√	√	–	00H
F0072H	Noise filter enable register 2	NFEN2		R/W	√	√	–	00H
F0073H	Input switch control register	ISC		R/W	√	√	–	00H
F0074H	Timer input select register 0	TIS0		R/W	–	√	–	00H
F0075H	Timer input select register 1	TIS1		R/W	–	√	–	00H
F0076H	A/D port configuration register	ADPC		R/W	–	√	–	00H
F0077H	Port mode select register	PMS		R/W	√	√	–	00H
F0078H	Invalid memory access detection control register	IAWCTL		R/W	–	√	–	00H
F0079H	Interrupt source determination flag register 0	INTFLG0		R/W	–	√	–	00H
F007AH	Timer input select register 2	TIS2		R/W	–	√	–	00H
F007BH	LIN channel select register	LCHSEL		R/W	–	√	–	00H
F007CH	Interrupt mask register	INTMSK		R/W	–	√	–	FFH
F0090H	Data flash control register	DFLCTL		R/W	√	√	–	00H
F00A0H	High-speed on-chip oscillator trimming register	HIOTRM		R/W	–	√	–	Note
F00A8H	High-speed on-chip oscillator frequency select register	HOCODIV		R/W	–	√	–	Undefined
F00D8H	SPM control register	SPMCTRL		R/W	–	√	–	00H
F00DAH	SP overflow address setting register	SPOFR		R/W	–	–	√	FFFEH
F00DBH								
F00DCH	SP underflow address setting register	SPUFR		R/W	–	–	√	0000H
F00DDH								
F00F0H	Peripheral enable register 0	PER0		R/W	√	√	–	00H
F00F3H	Operation speed mode control register	OSMC		R/W	–	√	–	00H
F00FEH	BCD correction result register	BCDADJ		R	–	√	–	Undefined
F0100H	Serial status register 00	SSR00L	SSR00	R	–	√	√	0000H
F0101H		–			–	–		
F0102H	Serial status register 01	SSR01L	SSR01	R	–	√	√	0000H
F0103H		–			–	–		
F0104H	Serial flag clear trigger register 00	SIR00L	SIR00	R/W	–	√	√	0000H
F0105H		–			–	–		
F0106H	Serial flag clear trigger register 01	SIR01L	SIR01	R/W	–	√	√	0000H
F0107H		–			–	–		

Note The reset value differs for each chip.

Table 3-6. Extended SFR (2nd SFR) List (3/32)

Address	Special Function Register (2nd SFR) Name	Symbol		R/W	Manipulable Bit Range			After reset
					1-bit	8-bit	16-bit	
F0108H	Serial mode register 00	SMR00		R/W	–	–	√	0020H
F0109H								
F010AH	Serial mode register 01	SMR01		R/W	–	–	√	0020H
F010BH								
F010CH	Serial communication operation setting register 00	SCR00		R/W	–	–	√	0087H
F010DH								
F010EH	Serial communication operation setting register 01	SCR01		R/W	–	–	√	0087H
F010FH								
F0110H	Serial channel enable status register	SE0L	SE0	R	√	√	√	0000H
F0111H		–			–	–		
F0112H	Serial channel start register 0	SS0L	SS0	R/W	√	√	√	0000H
F0113H		–			–	–		
F0114H	Serial channel stop register 0	ST0L	ST0	R/W	√	√	√	0000H
F0115H		–			–	–		
F0116H	Serial clock select register 0	SPS0L	SPS0	R/W	–	√	√	0000H
F0117H		–			–	–		
F0118H	Serial output register 0	SO0		R/W	–	–	√	0303H
F0119H								
F011AH	Serial output enable register 0	SOE0L	SOE0	R/W	√	√	√	0000H
F011BH		–			–	–		
F0120H	Serial output level register 0	SOL0L	SOL0	R/W	–	√	√	0000H
F0121H		–			–	–		
F0122H	Serial slave select enable register 0	SSE0L	SSE0	R/W	–	√	√	0000H
F0123H		–			–	–		
F0140H	Serial status register 10	SSR10L	SSR10	R	–	√	√	0000H
F0141H		–			–	–		
F0142H	Serial status register 11	SSR11L	SSR11	R	–	√	√	0000H
F0143H		–			–	–		
F0144H	Serial flag clear trigger register 10	SIR10L	SIR10	R/W	–	√	√	0000H
F0145H		–			–	–		
F0146H	Serial flag clear trigger register 11	SIR11L	SIR11	R/W	–	√	√	0000H
F0147H		–			–	–		
F0148H	Serial mode register 10	SMR10		R/W	–	–	√	0020H
F0149H								
F014AH	Serial mode register 11	SMR11		R/W	–	–	√	0020H
F014BH								
F014CH	Serial communication operation setting register 10	SCR10		R/W	–	–	√	0087H
F014DH								
F014EH	Serial communication operation setting register 11	SCR11		R/W	–	–	√	0087H
F014FH								
F0150H	Serial channel enable status register 1	SE1L	SE1	R	√	√	√	0000H
F0151H		–			–	–		

Table 3-6. Extended SFR (2nd SFR) List (4/32)

Address	Special Function Register (2nd SFR) Name	Symbol		R/W	Manipulable Bit Range			After reset
					1-bit	8-bit	16-bit	
F0152H	Serial channel start register 1	SS1L	SS1	R/W	√	√	√	0000H
F0153H		–			–	–		
F0154H	Serial channel stop register 1	ST1L	ST1	R/W	√	√	√	0000H
F0155H		–			–	–		
F0156H	Serial clock select register 1	SPS1L	SPS1	R/W	–	√	√	0000H
F0157H		–			–	–		
F0158H	Serial output register 1	SO1		R/W	–	–	√	0303H
F0159H								
F015AH	Serial output enable register 1	SOE1L	SOE1	R/W	√	√	√	0000H
F015BH		–			–	–		
F0160H	Serial output level register 1	SOL1L	SOL1	R/W	–	√	√	0000H
F0161H		–			–	–		
F0162H	Serial slave select enable register 1	SSE1L	SSE1	R/W	–	√	√	0000H
F0163H		–			–	–		
F0180H	Timer counter register 00	TCR00		R	–	–	√	FFFFH
F0181H								
F0182H	Timer counter register 01	TCR01		R	–	–	√	FFFFH
F0183H								
F0184H	Timer counter register 02	TCR02		R	–	–	√	FFFFH
F0185H								
F0186H	Timer counter register 03	TCR03		R	–	–	√	FFFFH
F0187H								
F0188H	Timer counter register 04	TCR04		R	–	–	√	FFFFH
F0189H								
F018AH	Timer counter register 05	TCR05		R	–	–	√	FFFFH
F018BH								
F018CH	Timer counter register 06	TCR06		R	–	–	√	FFFFH
F018DH								
F018EH	Timer counter register 07	TCR07		R	–	–	√	FFFFH
F018FH								
F0190H	Timer mode register 00	TMR00		R/W	–	–	√	0000H
F0191H								
F0192H	Timer mode register 01	TMR01		R/W	–	–	√	0000H
F0193H								
F0194H	Timer mode register 02	TMR02		R/W	–	–	√	0000H
F0195H								
F0196H	Timer mode register 03	TMR03		R/W	–	–	√	0000H
F0197H								
F0198H	Timer mode register 04	TMR04		R/W	–	–	√	0000H
F0199H								
F019AH	Timer mode register 05	TMR05		R/W	–	–	√	0000H
F019BH								

Table 3-6. Extended SFR (2nd SFR) List (5/32)

Address	Special Function Register (2nd SFR) Name	Symbol		R/W	Manipulable Bit Range			After reset
					1-bit	8-bit	16-bit	
F019CH	Timer mode register 06	TMR06		R/W	–	–	√	0000H
F019DH								
F019EH	Timer mode register 07	TMR07		R/W	–	–	√	0000H
F019FH								
F01A0H	Timer status register 00	TSR00L	TSR00	R	–	√	√	0000H
F01A1H		–			–	–		
F01A2H	Timer status register 01	TSR01L	TSR01	R	–	√	√	0000H
F01A3H		–			–	–		
F01A4H	Timer status register 02	TSR02L	TSR02	R	–	√	√	0000H
F01A5H		–			–	–		
F01A6H	Timer status register 03	TSR03L	TSR03	R	–	√	√	0000H
F01A7H		–			–	–		
F01A8H	Timer status register 04	TSR04L	TSR04	R	–	√	√	0000H
F01A9H		–			–	–		
F01AAH	Timer status register 05	TSR05L	TSR05	R	–	√	√	0000H
F01ABH		–			–	–		
F01ACH	Timer status register 06	TSR06L	TSR06	R	–	√	√	0000H
F01ADH		–			–	–		
F01AEH	Timer status register 07	TSR07L	TSR07	R	–	√	√	0000H
F01AFH		–			–	–		
F01B0H	Timer channel enable status register 0	TE0L	TE0	R	√	√	√	0000H
F01B1H		–			–	–		
F01B2H	Timer channel start register 0	TS0L	TS0	R/W	√	√	√	0000H
F01B3H		–			–	–		
F01B4H	Timer channel stop register 0	TT0L	TT0	R/W	√	√	√	0000H
F01B5H		–			–	–		
F01B6H	Timer clock select register 0	TPS0		R/W	–	–	√	0000H
F01B7H								
F01B8H	Timer output register 0	TO0L	TO0	R/W	–	√	√	0000H
F01B9H		–			–	–		
F01BAH	Timer output enable register 0	TOE0L	TOE0	R/W	√	√	√	0000H
F01BBH		–			–	–		
F01BCH	Timer output level register 0	TOL0L	TOL0	R/W	–	√	√	0000H
F01BDH		–			–	–		
F01BEH	Timer output mode register 0	TOM0L	TOM0	R/W	–	√	√	0000H
F01BFH		–			–	–		
F01C0H	Timer counter register 10	TCR10		R	–	–	√	FFFFH
F01C1H								
F01C2H	Timer counter register 11	TCR11		R	–	–	√	FFFFH
F01C3H								
F01C4H	Timer counter register 12	TCR12		R	–	–	√	FFFFH
F01C5H								

Table 3-6. Extended SFR (2nd SFR) List (6/32)

Address	Special Function Register (2nd SFR) Name	Symbol		R/W	Manipulable Bit Range			After reset
					1-bit	8-bit	16-bit	
F01C6H	Timer counter register 13	TCR13		R	–	–	√	FFFFH
F01C7H								
F01C8H	Timer counter register 14	TCR14		R	–	–	√	FFFFH
F01C9H								
F01CAH	Timer counter register 15	TCR15		R	–	–	√	FFFFH
F01CBH								
F01CCH	Timer counter register 16	TCR16		R	–	–	√	FFFFH
F01CDH								
F01CEH	Timer counter register 17	TCR17		R	–	–	√	FFFFH
F01CFH								
F01D0H	Timer mode register 10	TMR10		R/W	–	–	√	0000H
F01D1H								
F01D2H	Timer mode register 11	TMR11		R/W	–	–	√	0000H
F01D3H								
F01D4H	Timer mode register 12	TMR12		R/W	–	–	√	0000H
F01D5H								
F01D6H	Timer mode register 13	TMR13		R/W	–	–	√	0000H
F01D7H								
F01D8H	Timer mode register 14	TMR14		R/W	–	–	√	0000H
F01D9H								
F01DAH	Timer mode register 15	TMR15		R/W	–	–	√	0000H
F01DBH								
F01DCH	Timer mode register 16	TMR16		R/W	–	–	√	0000H
F01DDH								
F01DEH	Timer mode register 17	TMR17		R/W	–	–	√	0000H
F01DFH								
F01E0H	Timer status register 10	TSR10L	TSR10	R	–	√	√	0000H
F01E1H		–			–	–		
F01E2H	Timer status register 11	TSR11L	TSR11	R	–	√	√	0000H
F01E3H		–			–	–		
F01E4H	Timer status register 12	TSR12L	TSR12	R	–	√	√	0000H
F01E5H		–			–	–		
F01E6H	Timer status register 13	TSR13L	TSR13	R	–	√	√	0000H
F01E7H		–			–	–		
F01E8H	Timer status register 14	TSR14L	TSR14	R	–	√	√	0000H
F01E9H		–			–	–		
F01EAH	Timer status register 15	TSR15L	TSR15	R	–	√	√	0000H
F01EBH		–			–	–		
F01ECH	Timer status register 16	TSR16L	TSR16	R	–	√	√	0000H
F01EDH		–			–	–		
F01EEH	Timer status register 17	TSR17L	TSR17	R	–	√	√	0000H
F01EFH		–			–	–		

Table 3-6. Extended SFR (2nd SFR) List (7/32)

Address	Special Function Register (2nd SFR) Name	Symbol		R/W	Manipulable Bit Range			After reset
					1-bit	8-bit	16-bit	
F01F0H	Timer channel enable status register 1	TE1L	TE1	R	√	√	√	0000H
F01F1H		–			–	–		
F01F2H	Timer channel start register 1	TS1L	TS1	R/W	√	√	√	0000H
F01F3H		–			–	–		
F01F4H	Timer channel stop register 1	TT1L	TT1	R/W	√	√	√	0000H
F01F5H		–			–	–		
F01F6H	Timer clock select register 1	TPS1		R/W	–	–	√	0000H
F01F7H								
F01F8H	Timer output register 1	TO1L	TO1	R/W	–	√	√	0000H
F01F9H		–			–	–		
F01FAH	Timer output enable register 1	TOE1L	TOE1	R/W	√	√	√	0000H
F01FBH		–			–	–		
F01FCH	Timer output level register 1	TOL1L	TOL1	R/W	–	√	√	0000H
F01FDH		–			–	–		
F01FEH	Timer output mode register 1	TOM1L	TOM1	R/W	–	√	√	0000H
F01FFH		–			–	–		
F0200H	Error address storage register	ERADR		R	–	–	√	0000H
F0201H								
F0202H	1-bit error detection interrupt enable register	ECCIER		R/W	–	√	–	00H
F0203H	Bit error detection register	ECCER		R/W	–	√	–	00H
F0204H	ECC test protect register	ECCTPR		R/W	–	√	–	00H
F0205H	ECC test mode register	ECCTMDR		R/W	–	√	–	00H
F0206H	Write data inversion register	ECCDWRVR		R/W	–	–	√	0000H
F0207H								
F0220H	Port output slew rate select register	PSRSEL		R/W	√	√	–	00H
F0222H	SNOOZE status output control register 0	PSNZCNT0		R/W	√	√	–	00H
F0223H	SNOOZE status output control register 1	PSNZCNT1		R/W	√	√	–	00H
F0224H	SNOOZE status output control register 2	PSNZCNT2		R/W	√	√	–	00H
F0225H	SNOOZE status output control register 3	PSNZCNT3		R/W	√	√	–	00H
F0227H	D/A converter mode register 2	DAM2		R/W	√	√	–	00H
F0228H	PWM output delay control register 0	PWMDLY0		R/W	–	–	√	0000H
F0229H								
F022AH	PWM output delay control register 1	PWMDLY1		R/W	–	–	√	0000H
F022BH								
F022CH	PWM output delay control register 2	PWMDLY2		R/W	–	–	√	0000H
F022DH								
F0230H	IICA control register 00	IICCTL00		R/W	√	√	–	00H
F0231H	IICA control register 01	IICCTL01		R/W	√	√	–	00H
F0232H	IICA low-level width setting register 0	IICWL0		R/W	–	√	–	FFH
F0233H	IICA high-level width setting register 1	IICWH0		R/W	–	√	–	FFH
F0234H	Slave address register 0	SVA0		R/W	–	√	–	00H

Table 3-6. Extended SFR (2nd SFR) List (8/32)

Address	Special Function Register (2nd SFR) Name	Symbol	R/W	Manipulable Bit Range			After reset
				1-bit	8-bit	16-bit	
F0240H	Timer RJ control register 0	TRJCR0	R/W	–	√	–	00H
F0241H	Timer RJ I/O control register 0	TRJIOC0	R/W	√	√	–	00H
F0242H	Timer RJ mode register 0	TRJMR0	R/W	√	√	–	00H
F0243H	Timer RJ event pin select register 0	TRJISR0	R/W	√	√	–	00H
F0260H	Timer RD ELC register	TRDELC	R/W	√	√	–	00H Note
F0263H	Timer RD start register	TRDSTR	R/W	–	√	–	0CH Note
F0264H	Timer RD mode register	TRDMR	R/W	√	√	–	00H Note
F0265H	Timer RD PWM function select register	TRDPMR	R/W	√	√	–	00H Note
F0266H	Timer RD function control register	TRDFCR	R/W	√	√	–	80H Note
F0267H	Timer RD output master enable register 1	TRDOER1	R/W	√	√	–	FFH Note
F0268H	Timer RD output master enable register 2	TRDOER2	R/W	√	√	–	00H Note
F0269H	Timer RD output control register	TRDOCR	R/W	√	√	–	00H Note
F026AH	Timer RD digital filter function select register 0	TRDDF0	R/W	√	√	–	00H Note
F026BH	Timer RD digital filter function select register 1	TRDDF1	R/W	√	√	–	00H Note
F0270H	Timer RD control register 0	TRDCR0	R/W	√	√	–	00H Note
F0271H	Timer RD I/O control register A0	TRDIORA0	R/W	√	√	–	00H Note
F0272H	Timer RD I/O control register C0	TRDIORC0	R/W	√	√	–	88H Note
F0273H	Timer RD status register 0	TRDSR0	R/W	√	√	–	00H Note
F0274H	Timer RD interrupt enable register 0	TRDIER0	R/W	√	√	–	00H Note
F0275H	Timer RD PWM function output level control register 0	TRDPOCR0	R/W	√	√	–	00H Note
F0276H	Timer RD counter 0	TRD0	R/W	–	–	√	0000H Note
F0277H							
F0278H	Timer RD general register A0	TRDGRA0	R/W	–	–	√	FFFFH Note
F0279H							
F027AH	Timer RD general register B0	TRDGRB0	R/W	–	–	√	FFFFH Note
F027BH							
F0280H	Timer RD control register 1	TRDCR1	R/W	√	√	–	00H Note
F0281H	Timer RD I/O control register A1	TRDIORA1	R/W	√	√	–	00H Note
F0282H	Timer RD I/O control register C1	TRDIORC1	R/W	√	√	–	88H Note
F0283H	Timer RD status register 1	TRDSR1	R/W	√	√	–	00H Note
F0284H	Timer RD interrupt enable register 1	TRDIER1	R/W	√	√	–	00H Note
F0285H	Timer RD PWM function output level control register 1	TRDPOCR1	R/W	√	√	–	00H Note
F0286H	Timer RD counter 1	TRD1	R/W	–	–	√	0000H Note
F0287H							
F0288H	Timer RD general register A1	TRDGRA1	R/W	–	–	√	FFFFH Note
F0289H							
F028AH	Timer RD general register B1	TRDGRB1	R/W	–	–	√	FFFFH Note
F028BH							

Note The timer RD SFRs are undefined when FRQSEL4 = 1 in the user option byte (000C2H/020C2H) and TRD0EN = 0 in the PER1 register. If it is necessary to read the initial value, set f_{CLK} to f_{IH} and TRD0EN = 1 before reading.

Table 3-6. Extended SFR (2nd SFR) List (9/32)

Address	Special Function Register (2nd SFR) Name	Symbol	R/W	Manipulable Bit Range			After reset
				1-bit	8-bit	16-bit	
F02A0H	Comparator control register	CMPCTL	R/W	√	√	–	00H
<R> F02A1H	Comparator I/O select register	CMPSEL	R/W	√	√	–	00H
F02A2H	Comparator output monitor register	CMPMON	R	√	√	–	00H
F02C0H	Peripheral enable register 1	PER1	R/W	√	√	–	00H
F02C1H	Peripheral enable register 2	PER2	R/W	√	√	–	00H
F02C2H	CAN clock select register	CANCKSEL	R/W	√	√	–	00H
F02C3H	LIN clock select register	LINCKSEL	R/W	√	√	–	00H
F02C4H	Clock select register	CKSEL	R/W	√	√	–	00H
F02C5H	PLL control register	PLLCTL	R/W	√	√	–	00H
F02C6H	PLL status register	PLLSTS	R	–	√	–	00H
<R> F02C7H	f_{MP} clock division register	MDIV	R/W	–	√	–	00H/01H Note 3
F02C8H	RTC clock select register	RTCCL	R/W	√	√	–	00H
F02C9H	POR/CLM reset confirmation register	POCRES	R/W	√	√	–	Note 1
F02CAH	STOP status output control register	STPSTC	R/W	√	√	–	00H
F02D0H	High-speed DTC control register 0	HDTCCR0	R/W	√	√	–	00H
F02D2H	High-speed DTC transfer number register 0	HDTCCT0	R/W	√	√	–	00H
F02D3H	High-speed DTC transfer number reload register 0	HDTRLD0	R/W	√	√	–	00H
F02D4H	High-speed DTC source address register 0	HDTSAR0	R/W	–	–	√	0000H
F02D5H							
F02D6H	High-speed DTC destination address register 0	HDTDAR0	R/W	–	–	√	0000H
F02D7H							
F02D8H	High-speed DTC control register 1	HDTCCR1	R/W	√	√	–	00H
F02DAH	High-speed DTC transfer number register 1	HDTCCT1	R/W	√	√	–	00H
F02DBH	High-speed DTC transfer number reload register 1	HDTRLD1	R/W	√	√	–	00H
F02DCH	High-speed DTC source address register 1	HDTSAR1	R/W	–	–	√	0000H
F02DDH							
F02DEH	High-speed DTC destination address register 1	HDTDAR1	R/W	–	–	√	0000H
F02DFH							
F02E0H	DTC base address register	DTCBAR	R/W	–	√	–	FDH
F02E1H	High-speed DTC channel select register 0	SELHS0	R/W	√	√	–	3FH
F02E2H	High-speed DTC channel select register 1	SELHS1	R/W	√	√	–	3FH
F02E8H	DTC activation enable register 0	DTCEN0	R/W	√	√	–	00H
F02E9H	DTC activation enable register 1	DTCEN1	R/W	√	√	–	00H
F02EAH	DTC activation enable register 2	DTCEN2	R/W	√	√	–	00H
F02EBH	DTC activation enable register 3	DTCEN3	R/W	√	√	–	00H
F02ECH	DTC activation enable register 4	DTCEN4	R/W	√	√	–	00H
F02EDH	DTC activation enable register 5 Note 2	DTCEN5	R/W	√	√	–	00H
F02F0H	Flash memory CRC control register	CRC0CTL	R/W	√	√	–	00H
F02F2H	Flash memory CRC operation result register	PGCRCL	R/W	–	–	√	0000H
F02F3H							
F02F9H	CRC operation mode control register	CRCMD	R/W	–	√	–	00H
F02FAH	CRC data register	CRCD	R/W	–	–	√	0000H
F02FBH							

Notes 1. When a reset source other than POR occurs, bit 0 (the POCRES0 bit) retains a value right before reset.

2. Only in the RL78/F14.

<R> **Notes 3.** The value of the FRQSEL4 bit in the user option byte (000C2H/020C2H) becomes the initial value of the MDIV0 bit in the MDIV register.

Table 3-6. Extended SFR (2nd SFR) List (10/32)

Address	Special Function Register (2nd SFR) Name	Symbol		R/W	Manipulable Bit Range			After reset
					1-bit	8-bit	16-bit	
F0300H	CAN0 bit configuration register L	C0CFGLL	C0CFGL	R/W	–	√	√	0000H
F0301H		C0CFGLH			–	√		
F0302H	CAN0 bit configuration register H	C0CFGHL	C0CFGH	R/W	–	√	√	0000H
F0303H		C0CFGHH			–	√		
F0304H	CAN0 control register L	C0CTRLL	C0CTRL	R/W	–	√	√	0005H Note
F0305H		C0CTRLH			–	√		
F0306H	CAN0 control register H	C0CTRHL	C0CTRH	R/W	–	√	√	0000H
F0307H		C0CTRHH			–	√		
F0308H	CAN0 status register L	C0STSLL	C0STSL	R	–	√	√	0005H Note
F0309H		C0STSLH			–	√		
F030AH	CAN0 status register H	C0STSHL	C0STSH	R	–	√	√	0000H
F030BH		C0STSHH			–	√		
F030CH	CAN0 error flag register L	C0ERFLLL	C0ERFLL	R/W	–	√	√	0000H
F030DH		C0ERFLLH			–	√		
F030EH	CAN0 error flag register H	C0ERFLHL	C0ERFLH	R	–	√	√	0000H
F030FH		C0ERFLHH			–	√		
F0322H	CAN global configuration register L	GCFGLL	GCFGL	R/W	–	√	√	0000H
F0323H		GCFGLH			–	√		
F0324H	CAN global configuration register H	GCFGHL	GCFGH	R/W	–	√	√	0000H
F0325H		GCFGHH			–	√		
F0326H	CAN global control register L	GCTRLL	GCTRL	R/W	–	√	√	0005H Note
F0327H		GCTRLH			–	√		
F0328H	CAN global control register H	GCTRHL	GCTRH	R/W	–	√	√	0000H
F0329H		GCTRHH			–	√		
F032AH	CAN global status register	GSTSL	GSTS	R	–	√	√	000DH Note
F032BH		GSTSH			–	√		
F032CH	CAN global error flag register	GERFLL	–	R/W	–	√	–	00H
F032EH	CAN timestamp register	GTSC		R	–	–	√	0000H
F032FH					–	–		
F0330H	CAN receive rule number configuration register	GAFLCFGL	GAFLCFG	R/W	–	√	√	0000H
F0331H		GAFLCFGH			–	√		
F0332H	CAN receive buffer number configuration register	RMNBL	RMNB	R/W	–	√	√	0000H
F0333H		–			–	–		
F0334H	CAN receive buffer receive complete flag register	RMND0L	RMND0	R/W	–	√	√	0000H
F0335H		RMND0H			–	√		
F0338H	CAN receive FIFO control register 0	RFCC0L	RFCC0	R/W	–	√	√	0000H
F0339H		RFCC0H			–	√		
F033AH	CAN receive FIFO control register 1	RFCC1L	RFCC1	R/W	–	√	√	0000H
F033BH		RFCC1H			–	√		
F0340H	CAN receive FIFO status register 0	RFSTS0L	RFSTS0	R/W	–	√	√	0001H Note
F0341H		RFSTS0H		R	–	√		
F0342H	CAN receive FIFO status register 1	RFSTS1L	RFSTS1	R/W	–	√	√	0001H Note
F0343H		RFSTS1H		R	–	√		
F0348H	CAN receive FIFO pointer control register 0	RFPCTR0L	RFPCTR0	W	–	√	√	0000H
F0349H		RFPCTR0H			–	√		

Note When the CAN0EN bit in the PER2 register is 0, the read value is undefined.
When the CAN0EN bit in the PER2 register is 1, the read value is the initial value listed above.

Table 3-6. Extended SFR (2nd SFR) List (11/32)

Address	Special Function Register (2nd SFR) Name	Symbol		R/W	Manipulable Bit Range			After reset
					1-bit	8-bit	16-bit	
F034AH	CAN receive FIFO pointer control register 1	RFPCTR1L	RFPCTR1	W	–	√	√	0000H
F034BH		RFPCTR1H			–	√		
F0350H	CAN0 transmit/receive FIFO control register 0L	CFCCL0L	CFCCL0	R/W	–	√	√	0000H
F0351H		CFCCL0H			–	√		
F0352H	CAN0 transmit/receive FIFO control register 0H	CFCCH0L	CFCCH0	R/W	–	√	√	0000H
F0353H		CFCCH0H			–	√		
F0358H	CAN0 transmit/receive FIFO status register 0	CFSTS0L	CFSTS0	R/W	–	√	√	0001H Note
F0359H		CFSTS0H		R	–	√		
F035CH	CAN0 transmit/receive FIFO pointer control register 0	CFPCTR0L	CFPCTR0	W	–	√	√	0000H
F035DH		–			–	–		
F0360H	Receive FIFO message lost status register	RFMSTS		R	–	√	–	00H
F0361H	CAN0 transmit//receive FIFO message lost status register	CFMSTS		R	–	√	–	00H
F0362H	CAN receive FIFO interrupt status register	RFISTS		R	–	√	–	00H
F0363H	CAN transmit/receive FIFO receive interrupt status register	CFISTS		R	–	√	–	00H
F0364H	CAN0 transmit buffer control register 0	TMC0		R/W	–	√	–	00H
F0365H	CAN0 transmit buffer control register 1	TMC1		R/W	–	√	–	00H
F0366H	CAN0 transmit buffer control register 2	TMC2		R/W	–	√	–	00H
F0367H	CAN0 transmit buffer control register 3	TMC3		R/W	–	√	–	00H
F036CH	CAN0 transmit buffer status register 0	TMSTS0		R/W	–	√	–	00H
F036DH	CAN0 transmit buffer status register 1	TMSTS1		R/W	–	√	–	00H
F036EH	CAN0 transmit buffer status register 2	TMSTS2		R/W	–	√	–	00H
F036FH	CAN0 transmit buffer status register 3	TMSTS3		R/W	–	√	–	00H
F0374H	CAN0 transmit buffer transmit request status register	TMTRSTSL	TMTRSTS	R	–	√	√	0000H
F0375H		TMTRSTSH			–	√		
F0376H	CAN0 transmit buffer transmit complete status register	TMTCSTSL	TMTCSTS	R	–	√	√	0000H
F0377H		TMTCSTSH			–	√		
F0378H	CAN0 transmit buffer transmit abort status register	TMTASTSL	TMTASTS	R	–	√	√	0000H
F0379H		TMTASTSH			–	√		
F037AH	CAN0 transmit buffer interrupt enable register	TMIECL	TMIEC	R/W	–	√	√	0000H
F037BH		TMIECH			–	√		
F037CH	CAN0 transmit history buffer control register	THLCC0L	THLCC0	R/W	–	√	√	0000H
F037DH		THLCC0H			–	√		
F0380H	CAN0 transmit history buffer status register	THLSTS0L	THLSTS0	R/W	–	√	√	0001H Note
F0381H		THLSTS0H			–	√		
F0384H	CAN0 transmit history buffer pointer control register	THLPCTR0L	THLPCTR0	W	–	√	√	0000H
F0385H		THLPCTR0H			–	√		
F0388H	CAN global transmit interrupt status register	GTINTSTSL	GTINTSTS	R	–	√	√	0000H
F0389H		GTINTSTSH			–	√		
F038AH	CAN global RAM window control register	GRWCRL	GRWCR	R/W	–	√	√	0000H
F038BH		GRWCRH			–	√		
F038CH	CAN global test configuration register	GTSTCFGL	GTSTCFG	R/W	–	√	√	0000H
F038DH		GTSTCFGH			–	√		

Note When the CAN0EN bit in the PER2 register is 0, the read value is undefined.
When the CAN0EN bit in the PER2 register is 1, the read value is the initial value listed above.

Table 3-6. Extended SFR (2nd SFR) List (12/32)

Address	Special Function Register (2nd SFR) Name	Symbol		R/W	Manipulable Bit Range			After reset
					1-bit	8-bit	16-bit	
F038EH	CAN global test control register	GTSTCTRL	–	R/W	–	√	–	00H
F038FH		–			–	–		
F0394H	CAN global test protection unlock register	GLOCKK		W	–	–	√	0000H
F0395H					–	–		
F03A0H	CAN receive rule entry register 0AL Note 1	GAFLIDL0L	GAFLIDL0	R/W	–	√	√	0000H
F03A1H		GAFLIDL0H			–	√		
F03A0H	CAN receive buffer register 0AL Note 2	RMIDL0L	RMIDL0	R	–	√	√	0000H
F03A1H		RMIDL0H			–	√		
F03A2H	CAN receive rule entry register 0AH Note 1	GAFLIDH0L	GAFLIDH0	R/W	–	√	√	0000H
F03A3H		GAFLIDH0H			–	√		
F03A2H	CAN receive buffer register 0AH Note 2	RMIDH0L	RMIDH0	R	–	√	√	0000H
F03A3H		RMIDH0H			–	√		
F03A4H	CAN receive rule entry register 0BL Note 1	GAFLML0L	GAFLML0	R/W	–	√	√	0000H
F03A5H		GAFLML0H			–	√		
F03A4H	CAN receive buffer register 0BL Note 2	RMTS0L	RMTS0	R	–	√	√	0000H
F03A5H		RMTS0H			–	√		
F03A6H	CAN receive rule entry register 0BH Note 1	GAFLMH0L	GAFLMH0	R/W	–	√	√	0000H
F03A7H		GAFLMH0H			–	√		
F03A6H	CAN receive buffer register 0BH Note 2	RMPTR0L	RMPTR0	R	–	√	√	0000H
F03A7H		RMPTR0H			–	√		
F03A8H	CAN receive rule entry register 0CL Note 1	GAFLPL0L	GAFLPL0	R/W	–	√	√	0000H
F03A9H		GAFLPL0H			–	√		
F03A8H	CAN receive buffer register 0CL Note 2	RMDF00L	RMDF00	R	–	√	√	0000H
F03A9H		RMDF00H			–	√		
F03AAH	CAN receive rule entry register 0CH Note 1	GAFLPH0L	GAFLPH0	R/W	–	√	√	0000H
F03ABH		GAFLPH0H			–	√		
F03AAH	CAN receive buffer register 0CH Note 2	RMDF10L	RMDF10	R	–	√	√	0000H
F03ABH		RMDF10H			–	√		
F03ACH	CAN receive rule entry register 1AL Note 1	GAFLIDL1L	GAFLIDL1	R/W	–	√	√	0000H
F03ADH		GAFLIDL1H			–	√		
F03ACH	CAN receive buffer register 0DL Note 2	RMDF20L	RMDF20	R	–	√	√	0000H
F03ADH		RMDF20H			–	√		
F03AEH	CAN receive rule entry register 1AH Note 1	GAFLIDH1L	GAFLIDH1	R/W	–	√	√	0000H
F03AFH		GAFLIDH1H			–	√		
F03AEH	CAN receive buffer register 0DH Note 2	RMDF30L	RMDF30	R	–	√	√	0000H
F03AFH		RMDF30H			–	√		
F03B0H	CAN receive rule entry register 1BL Note 1	GAFLML1L	GAFLML1	R/W	–	√	√	0000H
F03B1H		GAFLML1H			–	√		

Notes 1. These registers are allocated to the RAM window 0 for the CAN module (receive rule and CAN RAM test register). When setting these registers, set the RPAGE bit in the GRWCR register to 0.

2. These registers are allocated to the RAM window 1 for the CAN module (receive buffer, receive FIFO buffer, transmit/receive FIFO buffer, transmit buffer, and transmit history data). When setting these registers, set the RPAGE bit in the GRWCR register to 1.

Table 3-6. Extended SFR (2nd SFR) List (13/32)

Address	Special Function Register (2nd SFR) Name	Symbol		R/W	Manipulable Bit Range			After reset
					1-bit	8-bit	16-bit	
F03B0H	CAN receive buffer register 1AL Note 2	RMIDL1L	RMIDL1	R	–	√	√	0000H
F03B1H		RMIDL1H			–	√		
F03B2H	CAN receive rule entry register 1BH Note 1	GAFLMH1L	GAFLMH1	R/W	–	√	√	0000H
F03B3H		GAFLMH1H			–	√		
F03B2H	CAN receive buffer register 1AH Note 2	RMIDH1L	RMIDH1	R	–	√	√	0000H
F03B3H		RMIDH1H			–	√		
F03B4H	CAN receive rule entry register 1CL Note 1	GAFLPL1L	GAFLPL1	R/W	–	√	√	0000H
F03B5H		GAFLPL1H			–	√		
F03B4H	CAN receive buffer register 1BL Note 2	RMTS1L	RMTS1	R	–	√	√	0000H
F03B5H		RMTS1H			–	√		
F03B6H	CAN receive rule entry register 1CH Note 1	GAFLPH1L	GAFLPH1	R/W	–	√	√	0000H
F03B7H		GAFLPH1H			–	√		
F03B6H	CAN receive buffer register 1BH Note 2	RMPTR1L	RMPTR1	R	–	√	√	0000H
F03B7H		RMPTR1H			–	√		
F03B8H	CAN receive rule entry register 2AL Note 1	GAFLIDL2L	GAFLIDL2	R/W	–	√	√	0000H
F03B9H		GAFLIDL2H			–	√		
F03B8H	CAN receive buffer register 1CL Note 2	RMDF01L	RMDF01	R	–	√	√	0000H
F03B9H		RMDF01H			–	√		
F03BAH	CAN receive rule entry register 2AH Note 1	GAFLIDH2L	GAFLIDH2	R/W	–	√	√	0000H
F03BBH		GAFLIDH2H			–	√		
F03BAH	CAN receive buffer register 1CH Note 2	RMDF11L	RMDF11	R	–	√	√	0000H
F03BBH		RMDF11H			–	√		
F03BCH	CAN receive rule entry register 2BL Note 1	GAFLML2L	GAFLML2	R/W	–	√	√	0000H
F03BDH		GAFLML2H			–	√		
F03BCH	CAN receive buffer register 1DL Note 2	RMDF21L	RMDF21	R	–	√	√	0000H
F03BDH		RMDF21H			–	√		
F03BEH	CAN receive rule entry register 2BH Note 1	GAFLMH2L	GAFLMH2	R/W	–	√	√	0000H
F03BFH		GAFLMH2H			–	√		
F03BEH	CAN receive buffer register 1DH Note 2	RMDF31L	RMDF31	R	–	√	√	0000H
F03BFH		RMDF31H			–	√		
F03C0H	CAN receive rule entry register 2CL Note 1	GAFLPL2L	GAFLPL2	R/W	–	√	√	0000H
F03C1H		GAFLPL2H			–	√		
F03C0H	CAN receive buffer register 2AL Note 2	RMIDL2L	RMIDL2	R	–	√	√	0000H
F03C1H		RMIDL2H			–	√		
F03C2H	CAN receive rule entry register 2CH Note 1	GAFLPH2L	GAFLPH2	R/W	–	√	√	0000H
F03C3H		GAFLPH2H			–	√		
F03C2H	CAN receive buffer register 2AH Note 2	RMIDH2L	RMIDH2	R	–	√	√	0000H
F03C3H		RMIDH2H			–	√		
F03C4H	CAN receive rule entry register 3AL Note 1	GAFLIDL3L	GAFL1DL3	R/W	–	√	√	0000H
F03C5H		GAFLIDL3H			–	√		
F03C4H	CAN receive buffer register 2BL Note 2	RMTS2L	RMTS2	R	–	√	√	0000H
F03C5H		RMTS2H			–	√		

Notes 1. These registers are allocated to the RAM window 0 for the CAN module (receive rule and CAN RAM test register). When setting these registers, set the RPAGE bit in the GRWCR register to 0.

2. These registers are allocated to the RAM window 1 for the CAN module (receive buffer, receive FIFO buffer, transmit/receive FIFO buffer, transmit buffer, and transmit history data). When setting these registers, set the RPAGE bit in the GRWCR register to 1.

Table 3-6. Extended SFR (2nd SFR) List (14/32)

Address	Special Function Register (2nd SFR) Name	Symbol		R/W	Manipulable Bit Range			After reset
					1-bit	8-bit	16-bit	
F03C6H	CAN receive rule entry register 3AH Note 1	GAFLIDH3L	GAFLIDH3	R/W	–	√	√	0000H
F03C7H		GAFLIDH3H			–	√		
F03C6H	CAN receive buffer register 2BH Note 2	RMPTR2L	RMPTR2	R	–	√	√	0000H
F03C7H		RMPTR2H			–	√		
F03C8H	CAN receive rule entry register 3BL Note 1	GAFLML3L	GAFLML3	R/W	–	√	√	0000H
F03C9H		GAFLML3H			–	√		
F03C8H	CAN receive buffer register 2CL Note 2	RMDF02L	RMDF02	R	–	√	√	0000H
F03C9H		RMDF02H			–	√		
F03CAH	CAN receive rule entry register 3BH Note 1	GAFLMH3L	GAFLMH3	R/W	–	√	√	0000H
F03CBH		GAFLMH3H			–	√		
F03CAH	CAN receive buffer register 2CH Note 2	RMDF12L	RMDF12	R	–	√	√	0000H
F03CBH		RMDF12H			–	√		
F03CCH	CAN receive rule entry register 3CL Note 1	GAFLPL3L	GAFLPL3	R/W	–	√	√	0000H
F03CDH		GAFLPL3H			–	√		
F03CCH	CAN receive buffer register 2DL Note 2	RMDF22L	RMDF22	R	–	√	√	0000H
F03CDH		RMDF22H			–	√		
F03CEH	CAN receive rule entry register 3CH Note 1	GAFLPH3L	GAFLPH3	R/W	–	√	√	0000H
F03CFH		GAFLPH3H			–	√		
F03CEH	CAN receive buffer register 2DH Note 2	RMDF32L	RMDF32	R	–	√	√	0000H
F03CFH		RMDF32H			–	√		
F03D0H	CAN receive rule entry register 4AL Note 1	GAFLIDL4L	GAFLIDL4	R/W	–	√	√	0000H
F03D1H		GAFLIDL4H			–	√		
F03D0H	CAN receive buffer register 3AL Note 2	RMIDL3L	RMIDL3	R	–	√	√	0000H
F03D1H		RMIDL3H			–	√		
F03D2H	CAN receive rule entry register 4AH Note 1	GAFLIDH4L	GAFLIDH4	R/W	–	√	√	0000H
F03D3H		GAFLIDH4H			–	√		
F03D2H	CAN receive buffer register 3AH Note 2	RMIDH3L	RMIDH3	R	–	√	√	0000H
F03D3H		RMIDH3H			–	√		
F03D4H	CAN receive rule entry register 4BL Note 1	GAFLML4L	GAFLML4	R/W	–	√	√	0000H
F03D5H		GAFLML4H			–	√		
F03D4H	CAN receive buffer register 3BL Note 2	RMTS3L	RMTS3	R	–	√	√	0000H
F03D5H		RMTS3H			–	√		
F03D6H	CAN receive rule entry register 4BH Note 1	GAFLMH4L	GAFLMH4	R/W	–	√	√	0000H
F03D7H		GAFLMH4H			–	√		
F03D6H	CAN receive buffer register 3BH Note 2	RMPTR3L	RMPTR3	R	–	√	√	0000H
F03D7H		RMPTR3H			–	√		
F03D8H	CAN receive rule entry register 4CL Note 1	GAFLPL4L	GAFLPL4	R/W	–	√	√	0000H
F03D9H		GAFLPL4H			–	√		
F03D8H	CAN receive buffer register 3CL Note 2	RMDF03L	RMDF03	R	–	√	√	0000H
F03D9H		RMDF03H			–	√		

Notes 1. These registers are allocated to the RAM window 0 for the CAN module (receive rule and CAN RAM test register). When setting these registers, set the RPAGE bit in the GRWCR register to 0.

2. These registers are allocated to the RAM window 1 for the CAN module (receive buffer, receive FIFO buffer, transmit/receive FIFO buffer, transmit buffer, and transmit history data). When setting these registers, set the RPAGE bit in the GRWCR register to 1.

Table 3-6. Extended SFR (2nd SFR) List (15/32)

Address	Special Function Register (2nd SFR) Name	Symbol		R/W	Manipulable Bit Range			After reset
					1-bit	8-bit	16-bit	
F03DAH	CAN receive rule entry register 4CH Note 1	GAFLPH4L	GAFLPH4	R/W	–	√	√	0000H
F03DBH		GAFLPH4H			–	√		
F03DAH	CAN receive buffer register 3CH Note 2	RMDF13L	RMDF13	R	–	√	√	0000H
F03DBH		RMDF13H			–	√		
F03DCH	CAN receive rule entry register 5AL Note 1	GAFLIDL5L	GAFLIDL5	R/W	–	√	√	0000H
F03DDH		GAFLIDL5H			–	√		
F03DCH	CAN receive buffer register 3DL Note 2	RMDF23L	RMDF23	R	–	√	√	0000H
F03DDH		RMDF23H			–	√		
F03DEH	CAN receive rule entry register 5AH Note 1	GAFLIDH5L	GAFLIDH5	R/W	–	√	√	0000H
F03DFH		GAFLIDH5H			–	√		
F03DEH	CAN receive buffer register 3DH Note 2	RMDF33L	RMDF33	R	–	√	√	0000H
F03DFH		RMDF33H			–	√		
F03E0H	CAN receive rule entry register 5BL Note 1	GAFLML5L	GAFLML5	R/W	–	√	√	0000H
F03E1H		GAFLML5H			–	√		
F03E0H	CAN receive buffer register 4AL Note 2	RMIDL4L	RMIDL4	R	–	√	√	0000H
F03E1H		RMIDL4H			–	√		
F03E2H	CAN receive rule entry register 5BH Note 1	GAFLMH5L	GAFLMH5	R/W	–	√	√	0000H
F03E3H		GAFLMH5H			–	√		
F03E2H	CAN receive buffer register 4AH Note 2	RMIDH4L	RMIDH4	R	–	√	√	0000H
F03E3H		RMIDH4H			–	√		
F03E4H	CAN receive rule entry register 5CL Note 1	GAFLPL5L	GAFLPL5	R/W	–	√	√	0000H
F03E5H		GAFLPL5H			–	√		
F03E4H	CAN receive buffer register 4BL Note 2	RMTS4L	RMTS4	R	–	√	√	0000H
F03E5H		RMTS4H			–	√		
F03E6H	CAN receive rule entry register 5CH Note 1	GAFLPH5L	GAFLPH5	R/W	–	√	√	0000H
F03E7H		GAFLPH5H			–	√		
F03E6H	CAN receive buffer register 4BH Note 2	RMPTR4L	RMPTR4	R	–	√	√	0000H
F03E7H		RMPTR4H			–	√		
F03E8H	CAN receive rule entry register 6AL Note 1	GAFLIDL6L	GAFLIDL6	R/W	–	√	√	0000H
F03E9H		GAFLIDL6H			–	√		
F03E8H	CAN receive buffer register 4CL Note 2	RMDF04L	RMDF04	R	–	√	√	0000H
F03E9H		RMDF04H			–	√		
F03EAH	CAN receive rule entry register 6AH Note 1	GAFLIDH6L	GAFLIDH6	R/W	–	√	√	0000H
F03EBH		GAFLIDH6H			–	√		
F03EAH	CAN receive buffer register 4CH Note 2	RMDF14L	RMDF14	R	–	√	√	0000H
F03EBH		RMDF14H			–	√		
F03ECH	CAN receive rule entry register 6BL Note 1	GAFLML6L	GAFLML6	R/W	–	√	√	0000H
F03EDH		GAFLML6H			–	√		
F03ECH	CAN receive buffer register 4DL Note 2	RMDF24L	RMDF24	R	–	√	√	0000H
F03EDH		RMDF24H			–	√		
F03EEH	CAN receive rule entry register 6BH Note 1	GAFLMH6L	GAFLMH6	R/W	–	√	√	0000H
F03EFH		GAFLMH6H			–	√		

Notes 1. These registers are allocated to the RAM window 0 for the CAN module (receive rule and CAN RAM test register). When setting these registers, set the RPAGE bit in the GRWCR register to 0.

2. These registers are allocated to the RAM window 1 for the CAN module (receive buffer, receive FIFO buffer, transmit/receive FIFO buffer, transmit buffer, and transmit history data). When setting these registers, set the RPAGE bit in the GRWCR register to 1.

Table 3-6. Extended SFR (2nd SFR) List (16/32)

Address	Special Function Register (2nd SFR) Name	Symbol		R/W	Manipulable Bit Range			After reset
					1-bit	8-bit	16-bit	
F03EEH	CAN receive buffer register 4DH Note 2	RMDF34L	RMDF34	R	–	√	√	0000H
F03EFH		RMDF34H			–	√		
F03F0H	CAN receive rule entry register 6CL Note 1	GAFLPL6L	GAFLPL6	R/W	–	√	√	0000H
F03F1H		GAFLPL6H			–	√		
F03F0H	CAN receive buffer register 5AL Note 2	RMIDL5L	RMIDL5	R	–	√	√	0000H
F03F1H		RMIDL5H			–	√		
F03F2H	CAN receive rule entry register 6CH Note 1	GAFLPH6L	GAFLPH6	R/W	–	√	√	0000H
F03F3H		GAFLPH6H			–	√		
F03F2H	CAN receive buffer register 5AH Note 2	RMIDH5L	RMIDH5	R	–	√	√	0000H
F03F3H		RMIDH5H			–	√		
F03F4H	CAN receive rule entry register 7AL Note 1	GAFLIDL7L	GAFLIDL7	R/W	–	√	√	0000H
F03F5H		GAFLIDL7H			–	√		
F03F4H	CAN receive buffer register 5BL Note 2	RMTS5L	RMTS5	R	–	√	√	0000H
F03F5H		RMTS5H			–	√		
F03F6H	CAN receive rule entry register 7AH Note 1	GAFLIDH7L	GAFLIDH7	R/W	–	√	√	0000H
F03F7H		GAFLIDH7H			–	√		
F03F6H	CAN receive buffer register 5BH Note 2	RMPTR5L	RMPTR5	R	–	√	√	0000H
F03F7H		RMPTR5H			–	√		
F03F8H	CAN receive rule entry register 7BL Note 1	GAFLML7L	GAFLML7	R/W	–	√	√	0000H
F03F9H		GAFLML7H			–	√		
F03F8H	CAN receive buffer register 5CL Note 2	RMDF05L	RMDF05	R	–	√	√	0000H
F03F9H		RMDF05H			–	√		
F03FAH	CAN receive rule entry register 7BH Note 1	GAFLMH7L	GAFLMH7	R/W	–	√	√	0000H
F03FBH		GAFLMH7H			–	√		
F03FAH	CAN receive buffer register 5CH Note 2	RMDF15L	RMDF15	R	–	√	√	0000H
F03FBH		RMDF15H			–	√		
F03FCH	CAN receive rule entry register 7CL Note 1	GAFLPL7L	GAFLPL7	R/W	–	√	√	0000H
F03FDH		GAFLPL7H			–	√		
F03FCH	CAN receive buffer register 5DL Note 2	RMDF25L	RMDF25	R	–	√	√	0000H
F03FDH		RMDF25H			–	√		
F03FEH	CAN receive rule entry register 7CH Note 1	GAFLPH7L	GAFLPH7	R/W	–	√	√	0000H
F03FFH		GAFLPH7H			–	√		
F03FEH	CAN receive buffer register 5DH Note 2	RMDF35L	RMDF35	R	–	√	√	0000H
F03FFH		RMDF35H			–	√		
F0400H	CAN receive rule entry register 8AL Note 1	GAFLIDL8L	GAFLIDL8	R/W	–	√	√	0000H
F0401H		GAFLIDL8H			–	√		
F0400H	CAN receive buffer register 6AL Note 2	RMIDL6L	RMIDL6	R	–	√	√	0000H
F0401H		RMIDL6H			–	√		
F0402H	CAN receive rule entry register 8AH Note 1	GAFLIDH8L	GAFLIDH8	R/W	–	√	√	0000H
F0403H		GAFLIDH8H			–	√		
F0402H	CAN receive buffer register 6AH Note 2	RMIDH6L	RMIDH6	R	–	√	√	0000H
F0403H		RMIDH6H			–	√		

Notes 1. These registers are allocated to the RAM window 0 for the CAN module (receive rule and CAN RAM test register). When setting these registers, set the RPAGE bit in the GRWCR register to 0.

2. These registers are allocated to the RAM window 1 for the CAN module (receive buffer, receive FIFO buffer, transmit/receive FIFO buffer, transmit buffer, and transmit history data). When setting these registers, set the RPAGE bit in the GRWCR register to 1.

Table 3-6. Extended SFR (2nd SFR) List (17/32)

Address	Special Function Register (2nd SFR) Name	Symbol		R/W	Manipulable Bit Range			After reset
					1-bit	8-bit	16-bit	
F0404H	CAN receive rule entry register 8BL Note 1	GAFLML8L	GAFLML8	R/W	–	√	√	0000H
F0405H		GAFLML8H			–	√		
F0404H	CAN receive buffer register 6BL Note 2	RMTS6L	RMTS6	R	–	√	√	0000H
F0405H		RMTS6H			–	√		
F0406H	CAN receive rule entry register 8BH Note 1	GAFLMH8L	GAFLMH8	R/W	–	√	√	0000H
F0407H		GAFLMH8H			–	√		
F0406H	CAN receive buffer register 6BH Note 2	RMPTR6L	RMPTR6	R	–	√	√	0000H
F0407H		RMPTR6H			–	√		
F0408H	CAN receive rule entry register 8CL Note 1	GAFLPL8L	GAFLPL8	R/W	–	√	√	0000H
F0409H		GAFLPL8H			–	√		
F0408H	CAN receive buffer register 6CL Note 2	RMDF06L	RMDF06	R	–	√	√	0000H
F0409H		RMDF06H			–	√		
F040AH	CAN receive rule entry register 8CH Note 1	GAFLPH8L	GAFLPH8	R/W	–	√	√	0000H
F040BH		GAFLPH8H			–	√		
F040AH	CAN receive buffer register 6CH Note 2	RMDF16L	RMDF16	R	–	√	√	0000H
F040BH		RMDF16H			–	√		
F040CH	CAN receive rule entry register 9AL Note 1	GAFLIDL9L	GAFLIDL9	R/W	–	√	√	0000H
F040DH		GAFLIDL9H			–	√		
F040CH	CAN receive buffer register 6DL Note 2	RMDF26L	RMDF26	R	–	√	√	0000H
F040DH		RMDF26H			–	√		
F040EH	CAN receive rule entry register 9AH Note 1	GAFLIDH9L	GAFLIDH9	R/W	–	√	√	0000H
F040FH		GAFLIDH9H			–	√		
F040EH	CAN receive buffer register 6DH Note 2	RMDF36L	RMDF36	R	–	√	√	0000H
F040FH		RMDF36H			–	√		
F0410H	CAN receive rule entry register 9BL Note 1	GAFLML9L	GAFLML9	R/W	–	√	√	0000H
F0411H		GAFLML9H			–	√		
F0410H	CAN receive buffer register 7AL Note 2	RMIDL7L	RMIDL7	R	–	√	√	0000H
F0411H		RMIDL7H			–	√		
F0412H	CAN receive rule entry register 9BH Note 1	GAFLMH9L	GAFLMH9	R/W	–	√	√	0000H
F0413H		GAFLMH9H			–	√		
F0412H	CAN receive buffer register 7AH Note 2	RMIDH7L	RMIDH7	R	–	√	√	0000H
F0413H		RMIDH7H			–	√		
F0414H	CAN receive rule entry register 9CL Note 1	GAFLPL9L	GAFLPL9	R/W	–	√	√	0000H
F0415H		GAFLPL9H			–	√		
F0414H	CAN receive buffer register 7BL Note 2	RMTS7L	RMTS7	R	–	√	√	0000H
F0415H		RMTS7H			–	√		
F0416H	CAN receive rule entry register 9CH Note 1	GAFLPH9L	GAFLPH9	R/W	–	√	√	0000H
F0417H		GAFLPH9H			–	√		
F0416H	CAN receive buffer register 7BH Note 2	RMPTR7L	RMPTR7	R	–	√	√	0000H
F0417H		RMPTR7H			–	√		
F0418H	CAN receive rule entry register 10AL Note 1	GAFLIDL10L	GAFLIDL10	R/W	–	√	√	0000H
F0419H		GAFLIDL10H			–	√		
F0418H	CAN receive buffer register 7CL Note 2	RMDF07L	RMDF07	R	–	√	√	0000H
F0419H		RMDF07H			–	√		

Notes 1. These registers are allocated to the RAM window 0 for the CAN module (receive rule and CAN RAM test register). When setting these registers, set the RPAGE bit in the GRWCR register to 0.

2. These registers are allocated to the RAM window 1 for the CAN module (receive buffer, receive FIFO buffer, transmit/receive FIFO buffer, transmit buffer, and transmit history data). When setting these registers, set the RPAGE bit in the GRWCR register to 1.

Table 3-6. Extended SFR (2nd SFR) List (18/32)

Address	Special Function Register (2nd SFR) Name	Symbol		R/W	Manipulable Bit Range			After reset
					1-bit	8-bit	16-bit	
F041AH	CAN receive rule entry register 10AH Note 1	GAFLIDH10L	GAFLIDH10	R/W	–	√	√	0000H
F041BH		GAFLIDH10H			–	√		
F041AH	CAN receive buffer register 7CH Note 2	RMDF17L	RMDF17	R	–	√	√	0000H
F041BH		RMDF17H			–	√		
F041CH	CAN receive rule entry register 10BL Note 1	GAFLML10L	GAFLML10	R/W	–	√	√	0000H
F041DH		GAFLML10H			–	√		
F041CH	CAN receive buffer register 7DL Note 2	RMDF27L	RMDF27	R	–	√	√	0000H
F041DH		RMDF27H			–	√		
F041EH	CAN receive rule entry register 10BH Note 1	GAFLMH10L	GAFLMH10	R/W	–	√	√	0000H
F041FH		GAFLMH10H			–	√		
F041EH	CAN receive buffer register 7DH Note 2	RMDF37L	RMDF37	R	–	√	√	0000H
F041FH		RMDF37H			–	√		
F0420H	CAN receive rule entry register 10CL Note 1	GAFLPL10L	GAFLPL10	R/W	–	√	√	0000H
F0421H		GAFLPL10H			–	√		
F0420H	CAN receive buffer register 8AL Note 2	RMIDL8L	RMIDL8	R	–	√	√	0000H
F0421H		RMIDL8H			–	√		
F0422H	CAN receive rule entry register 10CH Note 1	GAFLPH10L	GAFLPH10	R/W	–	√	√	0000H
F0423H		GAFLPH10H			–	√		
F0422H	CAN receive buffer register 8AH Note 2	RMIDH8L	RMIDH8	R	–	√	√	0000H
F0423H		RMIDH8H			–	√		
F0424H	CAN receive rule entry register 11AL Note 1	GAFLIDL11L	GAFLIDL11	R/W	–	√	√	0000H
F0425H		GAFLIDL11H			–	√		
F0424H	CAN receive buffer register 8BL Note 2	RMTS8L	RMTS8	R	–	√	√	0000H
F0425H		RMTS8H			–	√		
F0426H	CAN receive rule entry register 11AH Note 1	GAFLIDH11L	GAFLIDH11	R/W	–	√	√	0000H
F0427H		GAFLIDH11H			–	√		
F0426H	CAN receive buffer register 8BH Note 2	RMPTR8L	RMPTR8	R	–	√	√	0000H
F0427H		RMPTR8H			–	√		
F0428H	CAN receive rule entry register 11BL Note 1	GAFLML11L	GAFLML11	R/W	–	√	√	0000H
F0429H		GAFLML11H			–	√		
F0428H	CAN receive buffer register 8CL Note 2	RMDF08L	RMDF08	R	–	√	√	0000H
F0429H		RMDF08H			–	√		
F042AH	CAN receive rule entry register 11BH Note 1	GAFLMH11L	GAFLMH11	R/W	–	√	√	0000H
F042BH		GAFLMH11H			–	√		
F042AH	CAN receive buffer register 8CH Note 2	RMDF18L	RMDF18	R	–	√	√	0000H
F042BH		RMDF18H			–	√		
F042CH	CAN receive rule entry register 11CL Note 1	GAFLPL11L	GAFLPL11	R/W	–	√	√	0000H
F042DH		GAFLPL11H			–	√		
F042CH	CAN receive buffer register 8DL Note 2	RMDF28L	RMDF28	R	–	√	√	0000H
F042DH		RMDF28H			–	√		
F042EH	CAN receive rule entry register 11CH Note 1	GAFLPH11L	GAFLPH11	R/W	–	√	√	0000H
F042FH		GAFLPH11H			–	√		

Notes 1. These registers are allocated to the RAM window 0 for the CAN module (receive rule and CAN RAM test register). When setting these registers, set the RPAGE bit in the GRWCR register to 0.

2. These registers are allocated to the RAM window 1 for the CAN module (receive buffer, receive FIFO buffer, transmit/receive FIFO buffer, transmit buffer, and transmit history data). When setting these registers, set the RPAGE bit in the GRWCR register to 1.

Table 3-6. Extended SFR (2nd SFR) List (19/32)

Address	Special Function Register (2nd SFR) Name	Symbol		R/W	Manipulable Bit Range			After reset
					1-bit	8-bit	16-bit	
F042EH	CAN receive buffer register 8DH Note 2	RMDF38L	RMDF38	R	–	√	√	0000H
F042FH		RMDF38H			–	√		
F0430H	CAN receive rule entry register 12AL Note 1	GAFLIDL12L	GAFLIDL12	R/W	–	√	√	0000H
F0431H		GAFLIDL12H			–	√		
F0430H	CAN receive buffer register 9AL Note 2	RMIDL9L	RMIDL9	R	–	√	√	0000H
F0431H		RMIDL9H			–	√		
F0432H	CAN receive rule entry register 12AH Note 1	GAFLIDH12L	GAFLIDH12	R/W	–	√	√	0000H
F0433H		GAFLIDH12H			–	√		
F0432H	CAN receive buffer register 9AH Note 2	RMIDH9L	RMIDH9	R	–	√	√	0000H
F0433H		RMIDH9H			–	√		
F0434H	CAN receive rule entry register 12BL Note 1	GAFLML12L	GAFLML12	R/W	–	√	√	0000H
F0435H		GAFLML12H			–	√		
F0434H	CAN receive buffer register 9BL Note 2	RMTS9L	RMTS9	R	–	√	√	0000H
F0435H		RMTS9H			–	√		
F0436H	CAN receive rule entry register 12BH Note 1	GAFLMH12L	GAFLMH12	R/W	–	√	√	0000H
F0437H		GAFLMH12H			–	√		
F0436H	CAN receive buffer register 9BH Note 2	RMPTR9L	RMPTR9	R	–	√	√	0000H
F0437H		RMPTR9H			–	√		
F0438H	CAN receive rule entry register 12CL Note 1	GAFLPL12L	GAFLPL12	R/W	–	√	√	0000H
F0439H		GAFLPL12H			–	√		
F0438H	CAN receive buffer register 9CL Note 2	RMDF09L	RMDF09	R	–	√	√	0000H
F0439H		RMDF09H			–	√		
F043AH	CAN receive rule entry register 12CH Note 1	GAFLPH12L	GAFLPH12	R/W	–	√	√	0000H
F043BH		GAFLPH12H			–	√		
F043AH	CAN receive buffer register 9CH Note 2	RMDF19L	RMDF19	R	–	√	√	0000H
F043BH		RMDF19H			–	√		
F043CH	CAN receive rule entry register 13AL Note 1	GAFLIDL13L	GAFLIDL13	R/W	–	√	√	0000H
F043DH		GAFLIDL13H			–	√		
F043CH	CAN receive buffer register 9DL Note 2	RMDF29L	RMDF29	R	–	√	√	0000H
F043DH		RMDF29H			–	√		
F043EH	CAN receive rule entry register 13AH Note 1	GAFLIDH13L	GAFLIDH13	R/W	–	√	√	0000H
F043FH		GAFLIDH13H			–	√		
F043EH	CAN receive buffer register 9DH Note 2	RMDF39L	RMDF39	R	–	√	√	0000H
F043FH		RMDF39H			–	√		
F0440H	CAN receive rule entry register 13BL Note 1	GAFLML13L	GAFLML13	R/W	–	√	√	0000H
F0441H		GAFLML13H			–	√		
F0440H	CAN receive buffer register 10AL Note 2	RMIDL10L	RMIDL10	R	–	√	√	0000H
F0441H		RMIDL10H			–	√		
F0442H	CAN receive rule entry register 13BH Note 1	GAFLMH13L	GAFLMH13	R/W	–	√	√	0000H
F0443H		GAFLMH13H			–	√		
F0442H	CAN receive buffer register 10AH Note 2	RMIDH10L	RMIDH10	R	–	√	√	0000H
F0443H		RMIDH10H			–	√		

Notes 1. These registers are allocated to the RAM window 0 for the CAN module (receive rule and CAN RAM test register). When setting these registers, set the RPAGE bit in the GRWCR register to 0.

2. These registers are allocated to the RAM window 1 for the CAN module (receive buffer, receive FIFO buffer, transmit/receive FIFO buffer, transmit buffer, and transmit history data). When setting these registers, set the RPAGE bit in the GRWCR register to 1.

Table 3-6. Extended SFR (2nd SFR) List (20/32)

Address	Special Function Register (2nd SFR) Name	Symbol		R/W	Manipulable Bit Range			After reset
					1-bit	8-bit	16-bit	
F0444H	CAN receive rule entry register 13CL Note 1	GAFLPL13L	GAFLPL13	R/W	–	√	√	0000H
F0445H		GAFLPL13H			–	√		
F0444H	CAN receive buffer register 10BL Note 2	RMTS10L	RMTS10	R	–	√	√	0000H
F0445H		RMTS10H			–	√		
F0446H	CAN receive rule entry register 13CH Note 1	GAFLPH13L	GAFLPH13	R/W	–	√	√	0000H
F0447H		GAFLPH13H			–	√		
F0446H	CAN receive buffer register 10BH Note 2	RMPTR10L	RMPTR10	R	–	√	√	0000H
F0447H		RMPTR10H			–	√		
F0448H	CAN receive rule entry register 14AL Note 1	GAFLIDL14L	GAFLIDL14	R/W	–	√	√	0000H
F0449H		GAFLIDL14H			–	√		
F0448H	CAN receive buffer register 10CL Note 2	RMDF010L	RMDF010	R	–	√	√	0000H
F0449H		RMDF010H			–	√		
F044AH	CAN receive rule entry register 14AH Note 1	GAFLIDH14L	GAFLIDH14	R/W	–	√	√	0000H
F044BH		GAFLIDH14H			–	√		
F044AH	CAN receive buffer register 10CH Note 2	RMDF110L	RMDF110	R	–	√	√	0000H
F044BH		RMDF110H			–	√		
F044CH	CAN receive rule entry register 14BL Note 1	GAFLML14L	GAFLML14	R/W	–	√	√	0000H
F044DH		GAFLML14H			–	√		
F044CH	CAN receive buffer register 10DL Note 2	RMDF210L	RMDF210	R	–	√	√	0000H
F044DH		RMDF210H			–	√		
F044EH	CAN receive rule entry register 14BH Note 1	GAFLMH14L	GAFLMH14	R/W	–	√	√	0000H
F044FH		GAFLMH14H			–	√		
F044EH	CAN receive buffer register 10DH Note 2	RMDF310L	RMDF310	R	–	√	√	0000H
F044FH		RMDF310H			–	√		
F0450H	CAN receive rule entry register 14CL Note 1	GAFLPL14L	GAFLPL14	R/W	–	√	√	0000H
F0451H		GAFLPL14H			–	√		
F0450H	CAN receive buffer register 11AL Note 2	RMIDL11L	RMIDL11	R	–	√	√	0000H
F0451H		RMIDL11H			–	√		
F0452H	CAN receive rule entry register 14CH Note 1	GAFLPH14L	GAFLPH14	R/W	–	√	√	0000H
F0453H		GAFLPH14H			–	√		
F0452H	CAN receive buffer register 11AH Note 2	RMIDH11L	RMIDH11	R	–	√	√	0000H
F0453H		RMIDH11H			–	√		
F0454H	CAN receive rule entry register 15AL Note 1	GAFLIDL15L	GAFLIDL15	R/W	–	√	√	0000H
F0455H		GAFLIDL15H			–	√		
F0454H	CAN receive buffer register 11BL Note 2	RMTS11L	RMTS11	R	–	√	√	0000H
F0455H		RMTS11H			–	√		
F0456H	CAN receive rule entry register 15AH Note 1	GAFLIDH15L	GAFLIDH15	R/W	–	√	√	0000H
F0457H		GAFLIDH15H			–	√		
F0456H	CAN receive buffer register 11BH Note 2	RMPTR11L	RMPTR11	R	–	√	√	0000H
F0457H		RMPTR11H			–	√		
F0458H	CAN receive rule entry register 15BL Note 1	GAFLML15L	GAFLML15	R/W	–	√	√	0000H
F0459H		GAFLML15H			–	√		
F0458H	CAN receive buffer register 11CL Note 2	RMDF011L	RMDF011	R	–	√	√	0000H
F0459H		RMDF011H			–	√		

Notes 1. These registers are allocated to the RAM window 0 for the CAN module (receive rule and CAN RAM test register). When setting these registers, set the RPAGE bit in the GRWCR register to 0.

2. These registers are allocated to the RAM window 1 for the CAN module (receive buffer, receive FIFO buffer, transmit/receive FIFO buffer, transmit buffer, and transmit history data). When setting these registers, set the RPAGE bit in the GRWCR register to 1.

Table 3-6. Extended SFR (2nd SFR) List (21/32)

Address	Special Function Register (2nd SFR) Name	Symbol		R/W	Manipulable Bit Range			After reset
					1-bit	8-bit	16-bit	
F045AH	CAN receive rule entry register 15BH Note 1	GAFLMH15L	GAFLMH15	R/W	–	√	√	0000H
F045BH		GAFLMH15H			–	√		
F045AH	CAN receive buffer register 11CH Note 2	RMDF111L	RMDF111	R	–	√	√	0000H
F045BH		RMDF111H			–	√		
F045CH	CAN receive rule entry register 15CL Note 1	GAFLPL15L	GAFLPL15	R/W	–	√	√	0000H
F045DH		GAFLPL15H			–	√		
F045CH	CAN receive buffer register 11DL Note 2	RMDF211L	RMDF211	R	–	√	√	0000H
F045DH		RMDF211H			–	√		
F045EH	CAN receive rule entry register 15CH Note 1	GAFLPH15L	GAFLPH15	R/W	–	√	√	0000H
F045FH		GAFLPH15H			–	√		
F045EH	CAN receive buffer register 11DH Note 2	RMDF311L	RMDF311	R	–	√	√	0000H
F045FH		RMDF311H			–	√		
F0460H	CAN receive buffer register 12AL Note 2	RMIDL12L	RMIDL12	R	–	√	√	0000H
F0461H		RMIDL12H			–	√		
F0462H	CAN receive buffer register 12AH Note 2	RMIDH12L	RMIDH12	R	–	√	√	0000H
F0463H		RMIDH12H			–	√		
F0464H	CAN receive buffer register 12BL Note 2	RMTS12L	RMTS12	R	–	√	√	0000H
F0465H		RMTS12H			–	√		
F0466H	CAN receive buffer register 12BH Note 2	RMPTR12L	RMPTR12	R	–	√	√	0000H
F0467H		RMPTR12H			–	√		
F0468H	CAN receive buffer register 12CL Note 2	RMDF012L	RMDF012	R	–	√	√	0000H
F0469H		RMDF012H			–	√		
F046AH	CAN receive buffer register 12CH Note 2	RMDF112L	RMDF112	R	–	√	√	0000H
F046BH		RMDF112H			–	√		
F046CH	CAN receive buffer register 12DL Note 2	RMDF212L	RMDF212	R	–	√	√	0000H
F046DH		RMDF212H			–	√		
F046EH	CAN receive buffer register 12DH Note 2	RMDF312L	RMDF312	R	–	√	√	0000H
F046FH		RMDF312H			–	√		
F0470H	CAN receive buffer register 13AL Note 2	RMIDL13L	RMIDL13	R	–	√	√	0000H
F0471H		RMIDL13H			–	√		
F0472H	CAN receive buffer register 13AH Note 2	RMIDH13L	RMIDH13	R	–	√	√	0000H
F0473H		RMIDH13H			–	√		
F0474H	CAN receive buffer register 13BL Note 2	RMTS13L	RMTS13	R	–	√	√	0000H
F0475H		RMTS13H			–	√		
F0476H	CAN receive buffer register 13BH Note 2	RMPTR13L	RMPTR13	R	–	√	√	0000H
F0477H		RMPTR13H			–	√		
F0478H	CAN receive buffer register 13CL Note 2	RMDF013L	RMDF013	R	–	√	√	0000H
F0479H		RMDF013H			–	√		
F047AH	CAN receive buffer register 13CH Note 2	RMDF113L	RMDF113	R	–	√	√	0000H
F047BH		RMDF113H			–	√		
F047CH	CAN receive buffer register 13DL Note 2	RMDF213L	RMDF213	R	–	√	√	0000H
F047DH		RMDF213H			–	√		

Notes 1. These registers are allocated to the RAM window 0 for the CAN module (receive rule and CAN RAM test register). When setting these registers, set the RPAGE bit in the GRWCR register to 0.

2. These registers are allocated to the RAM window 1 for the CAN module (receive buffer, receive FIFO buffer, transmit/receive FIFO buffer, transmit buffer, and transmit history data). When setting these registers, set the RPAGE bit in the GRWCR register to 1.

Table 3-6. Extended SFR (2nd SFR) List (22/32)

Address	Special Function Register (2nd SFR) Name	Symbol		R/W	Manipulable Bit Range			After reset
					1-bit	8-bit	16-bit	
F047EH	CAN receive buffer register 13DH Note 2	RMDF313L	RMDF313	R	–	√	√	0000H
F047FH		RMDF313H			–	√		
F0480H	CAN receive buffer register 14AL Note 2	RMIDL14L	RMIDL14	R	–	√	√	0000H
F0481H		RMIDL14H			–	√		
F0482H	CAN receive buffer register 14AH Note 2	RMIDH14L	RMIDH14	R	–	√	√	0000H
F0483H		RMIDH14H			–	√		
F0484H	CAN receive buffer register 14BL Note 2	RMTS14L	RMTS14	R	–	√	√	0000H
F0485H		RMTS14H			–	√		
F0486H	CAN receive buffer register 14BH Note 2	RMPTR14L	RMPTR14	R	–	√	√	0000H
F0487H		RMPTR14H			–	√		
F0488H	CAN receive buffer register 14CL Note 2	RMDF014L	RMDF014	R	–	√	√	0000H
F0489H		RMDF014H			–	√		
F048AH	CAN receive buffer register 14CH Note 2	RMDF114L	RMDF114	R	–	√	√	0000H
F048BH		RMDF114H			–	√		
F048CH	CAN receive buffer register 14DL Note 2	RMDF214L	RMDF214	R	–	√	√	0000H
F048DH		RMDF214H			–	√		
F048EH	CAN receive buffer register 14DH Note 2	RMDF314L	RMDF314	R	–	√	√	0000H
F048FH		RMDF314H			–	√		
F0490H	CAN receive buffer register 15AL Note 2	RMIDL15L	RMIDL15	R	–	√	√	0000H
F0491H		RMIDL15H			–	√		
F0492H	CAN receive buffer register 15AH Note 2	RMIDH15L	RMIDH15	R	–	√	√	0000H
F0493H		RMIDH15H			–	√		
F0494H	CAN receive buffer register 15BL Note 2	RMTS15L	RMTS15	R	–	√	√	0000H
F0495H		RMTS15H			–	√		
F0496H	CAN receive buffer register 15BH Note 2	RMPTR15L	RMPTR15	R	–	√	√	0000H
F0497H		RMPTR15H			–	√		
F0498H	CAN receive buffer register 15CL Note 2	RMDF015L	RMDF015	R	–	√	√	0000H
F0499H		RMDF015H			–	√		
F049AH	CAN receive buffer register 15CH Note 2	RMDF115L	RMDF115	R	–	√	√	0000H
F049BH		RMDF115H			–	√		
F049CH	CAN receive buffer register 15DL Note 2	RMDF215L	RMDF215	R	–	√	√	0000H
F049DH		RMDF215H			–	√		
F049EH	CAN receive buffer register 15DH Note 2	RMDF315L	RMDF315	R	–	√	√	0000H
F049FH		RMDF315H			–	√		
F0580H	CAN RAM test register 0 Note 1	RPGACC0L	RPGACC0	R/W	–	√	√	0000H
F0581H		RPGACC0H			–	√		
F0582H	CAN RAM test register 1 Note 1	RPGACC1L	RPGACC1	R/W	–	√	√	0000H
F0583H		RPGACC1H			–	√		
F0584H	CAN RAM test register 2 Note 1	RPGACC2L	RPGACC2	R/W	–	√	√	0000H
F0585H		RPGACC2H			–	√		
F0586H	CAN RAM test register 3 Note 1	RPGACC3L	RPGACC3	R/W	–	√	√	0000H
F0587H		RPGACC3H			–	√		
F0588H	CAN RAM test register 4 Note 1	RPGACC4L	RPGACC4	R/W	–	√	√	0000H
F0589H		RPGACC4H			–	√		
F058AH	CAN RAM test register 5 Note 1	RPGACC5L	RPGACC5	R/W	–	√	√	0000H
F058BH		RPGACC5H			–	√		

Notes 1. These registers are allocated to the RAM window 0 for the CAN module (receive rule and CAN RAM test register). When setting these registers, set the RPAGE bit in the GRWCR register to 0.

2. These registers are allocated to the RAM window 1 for the CAN module (receive buffer, receive FIFO buffer, transmit/receive FIFO buffer, transmit buffer, and transmit history data). When setting these registers, set the RPAGE bit in the GRWCR register to 1.

Table 3-6. Extended SFR (2nd SFR) List (23/32)

Address	Special Function Register (2nd SFR) Name	Symbol		R/W	Manipulable Bit Range			After reset
					1-bit	8-bit	16-bit	
F058CH	CAN RAM test register 6 Note 1	RPGACC6L	RPGACC6	R/W	–	√	√	0000H
F058DH		RPGACC6H			–	√		
F058EH	CAN RAM test register 7 Note 1	RPGACC7L	RPGACC7	R/W	–	√	√	0000H
F058FH		RPGACC7H			–	√		
F0590H	CAN RAM test register 8 Note 1	RPGACC8L	RPGACC8	R/W	–	√	√	0000H
F0591H		RPGACC8H			–	√		
F0592H	CAN RAM test register 9 Note 1	RPGACC9L	RPGACC9	R/W	–	√	√	0000H
F0593H		RPGACC9H			–	√		
F0594H	CAN RAM test register 10 Note 1	RPGACC10L	RPGACC10	R/W	–	√	√	0000H
F0595H		RPGACC10H			–	√		
F0596H	CAN RAM test register 11 Note 1	RPGACC11L	RPGACC11	R/W	–	√	√	0000H
F0597H		RPGACC11H			–	√		
F0598H	CAN RAM test register 12 Note 1	RPGACC12L	RPGACC12	R/W	–	√	√	0000H
F0599H		RPGACC12H			–	√		
F059AH	CAN RAM test register 13 Note 1	RPGACC13L	RPGACC13	R/W	–	√	√	0000H
F059BH		RPGACC13H			–	√		
F059CH	CAN RAM test register 14 Note 1	RPGACC14L	RPGACC14	R/W	–	√	√	0000H
F059DH		RPGACC14H			–	√		
F059EH	CAN RAM test register 15 Note 1	RPGACC15L	RPGACC15	R/W	–	√	√	0000H
F059FH		RPGACC15H			–	√		
F05A0H	CAN RAM test register 16 Note 1	RPGACC16L	RPGACC16	R/W	–	√	√	0000H
F05A1H		RPGACC16H			–	√		
F05A0H	CAN receive FIFO access register 0AL Note 2	RFIDL0L	RFIDL0	R	–	√	√	0000H
F05A1H		RFIDL0H			–	√		
F05A2H	CAN RAM test register 17 Note 1	RPGACC17L	RPGACC17	R/W	–	√	√	0000H
F05A3H		RPGACC17H			–	√		
F05A2H	CAN receive FIFO access register 0AH Note 2	RFIDH0L	RFIDH0	R	–	√	√	0000H
F05A3H		RFIDH0H			–	√		
F05A4H	CAN RAM test register 18 Note 1	RPGACC18L	RPGACC18	R/W	–	√	√	0000H
F05A5H		RPGACC18H			–	√		
F05A4H	CAN receive FIFO access register 0BL Note 2	RFTS0L	RFTS0	R	–	√	√	0000H
F05A5H		RFTS0H			–	√		
F05A6H	CAN RAM test register 19 Note 1	RPGACC19L	RPGACC19	R/W	–	√	√	0000H
F05A7H		RPGACC19H			–	√		
F05A6H	CAN receive FIFO access register 0BH Note 2	RFPTR0L	RFPTR0	R	–	√	√	0000H
F05A7H		RFPTR0H			–	√		
F05A8H	CAN RAM test register 20 Note 1	RPGACC20L	RPGACC20	R/W	–	√	√	0000H
F05A9H		RPGACC20H			–	√		
F05A8H	CAN receive FIFO access register 0CL Note 2	RFDF00L	RFDF00	R	–	√	√	0000H
F05A9H		RFDF00H			–	√		
F05AAH	CAN RAM test register 21 Note 1	RPGACC21L	RPGACC21	R/W	–	√	√	0000H
F05ABH		RPGACC21H			–	√		
F05AAH	CAN receive FIFO access register 0CH Note 2	RFDF10L	RFDF10	R	–	√	√	0000H
F05ABH		RFDF10H			–	√		
F05ACH	CAN RAM test register 22 Note 1	RPGACC22L	RPGACC22	R/W	–	√	√	0000H
F05ADH		RPGACC22H			–	√		

Notes 1. These registers are allocated to the RAM window 0 for the CAN module (receive rule and CAN RAM test register). When setting these registers, set the RPAGE bit in the GRWCR register to 0.

2. These registers are allocated to the RAM window 1 for the CAN module (receive buffer, receive FIFO buffer, transmit/receive FIFO buffer, transmit buffer, and transmit history data). When setting these registers, set the RPAGE bit in the GRWCR register to 1.

Table 3-6. Extended SFR (2nd SFR) List (24/32)

Address	Special Function Register (2nd SFR) Name	Symbol		R/W	Manipulable Bit Range			After reset
					1-bit	8-bit	16-bit	
F05ACH	CAN receive FIFO access register 0DL Note 2	RFDF20L	RFDF20	R	–	√	√	0000H
F05ADH		RFDF20H			–	√		
F05AEH	CAN RAM test register 23 Note 1	RPGACC23L	RPGACC23	R/W	–	√	√	0000H
F05AFH		RPGACC23H			–	√		
F05AEH	CAN receive FIFO access register 0DH Note 2	RFDF30L	RFDF30	R	–	√	√	0000H
F05AFH		RFDF30H			–	√		
F05B0H	CAN RAM test register 24 Note 1	RPGACC24L	RPGACC24	R/W	–	√	√	0000H
F05B1H		RPGACC24H			–	√		
F05B0H	CAN receive FIFO access register 1AL Note 2	RFIDL1L	RFIDL1	R	–	√	√	0000H
F05B1H		RFIDL1H			–	√		
F05B2H	CAN RAM test register 25 Note 1	RPGACC25L	RPGACC25	R/W	–	√	√	0000H
F05B3H		RPGACC25H			–	√		
F05B2H	CAN receive FIFO access register 1AH Note 2	RFIDH1L	RFIDH1	R	–	√	√	0000H
F05B3H		RFIDH1H			–	√		
F05B4H	CAN RAM test register 26 Note 1	RPGACC26L	RPGACC26	R/W	–	√	√	0000H
F05B5H		RPGACC26H			–	√		
F05B4H	CAN receive FIFO access register 1BL Note 2	RFTS1L	RFTS1	R	–	√	√	0000H
F05B5H		RFTS1H			–	√		
F05B6H	CAN RAM test register 27 Note 1	RPGACC27L	RPGACC27	R/W	–	√	√	0000H
F05B7H		RPGACC27H			–	√		
F05B6H	CAN receive FIFO access register 1BH Note 2	RFPTR1L	RFPTR1	R	–	√	√	0000H
F05B7H		RFPTR1H			–	√		
F05B8H	CAN RAM test register 28 Note 1	RPGACC28L	RPGACC28	R/W	–	√	√	0000H
F05B9H		RPGACC28H			–	√		
F05B8H	CAN receive FIFO access register 1CL Note 2	RFDF01L	RFDF01	R	–	√	√	0000H
F05B9H		RFDF01H			–	√		
F05BAH	CAN RAM test register 29 Note 1	RPGACC29L	RPGACC29	R/W	–	√	√	0000H
F05BBH		RPGACC29H			–	√		
F05BAH	CAN receive FIFO access register 1CH Note 2	RFDF11L	RFDF11	R	–	√	√	0000H
F05BBH		RFDF11H			–	√		
F05BCH	CAN RAM test register 30 Note 1	RPGACC30L	RPGACC30	R/W	–	√	√	0000H
F05BDH		RPGACC30H			–	√		
F05BCH	CAN receive FIFO access register 1DL Note 2	RFDF21L	RFDF21	R	–	√	√	0000H
F05BDH		RFDF21H			–	√		
F05BEH	CAN RAM test register 31 Note 1	RPGACC31L	RPGACC31	R/W	–	√	√	0000H
F05BFH		RPGACC31H			–	√		
F05BEH	CAN receive FIFO access register 1DH Note 2	RFDF31L	RFDF31	R	–	√	√	0000H
F05BFH		RFDF31H			–	√		
F05C0H	CAN RAM test register 32 Note 1	RPGACC32L	RPGACC32	R/W	–	√	√	0000H
F05C1H		RPGACC32H			–	√		
F05C2H	CAN RAM test register 33 Note 1	RPGACC33L	RPGACC33	R/W	–	√	√	0000H
F05C3H		RPGACC33H			–	√		
F05C4H	CAN RAM test register 34 Note 1	RPGACC34L	RPGACC34	R/W	–	√	√	0000H
F05C5H		RPGACC34H			–	√		
F05C6H	CAN RAM test register 35 Note 1	RPGACC35L	RPGACC35	R/W	–	√	√	0000H
F05C7H		RPGACC35H			–	√		

Notes 1. These registers are allocated to the RAM window 0 for the CAN module (receive rule and CAN RAM test register). When setting these registers, set the RPAGE bit in the GRWCR register to 0.

2. These registers are allocated to the RAM window 1 for the CAN module (receive buffer, receive FIFO buffer, transmit/receive FIFO buffer, transmit buffer, and transmit history data). When setting these registers, set the RPAGE bit in the GRWCR register to 1.

Table 3-6. Extended SFR (2nd SFR) List (25/32)

Address	Special Function Register (2nd SFR) Name	Symbol		R/W	Manipulable Bit Range			After reset
					1-bit	8-bit	16-bit	
F05C8H	CAN RAM test register 36 Note 1	RPGACC36L	RPGACC36	R/W	–	√	√	0000H
F05C9H		RPGACC36H			–	√		
F05CAH	CAN RAM test register 37 Note 1	RPGACC37L	RPGACC37	R/W	–	√	√	0000H
F05CBH		RPGACC37H			–	√		
F05CCH	CAN RAM test register 38 Note 1	RPGACC38L	RPGACC38	R/W	–	√	√	0000H
F05CDH		RPGACC38H			–	√		
F05CEH	CAN RAM test register 39 Note 1	RPGACC39L	RPGACC39	R/W	–	√	√	0000H
F05CFH		RPGACC39H			–	√		
F05D0H	CAN RAM test register 40 Note 1	RPGACC40L	RPGACC40	R/W	–	√	√	0000H
F05D1H		RPGACC40H			–	√		
F05D2H	CAN RAM test register 41 Note 1	RPGACC41L	RPGACC41	R/W	–	√	√	0000H
F05D3H		RPGACC41H			–	√		
F05D4H	CAN RAM test register 42 Note 1	RPGACC42L	RPGACC42	R/W	–	√	√	0000H
F05D5H		RPGACC42H			–	√		
F05D6H	CAN RAM test register 43 Note 1	RPGACC43L	RPGACC43	R/W	–	√	√	0000H
F05D7H		RPGACC43H			–	√		
F05D8H	CAN RAM test register 44 Note 1	RPGACC44L	RPGACC44	R/W	–	√	√	0000H
F05D9H		RPGACC44H			–	√		
F05DAH	CAN RAM test register 45 Note 1	RPGACC45L	RPGACC45	R/W	–	√	√	0000H
F05DBH		RPGACC45H			–	√		
F05DCH	CAN RAM test register 46 Note 1	RPGACC46L	RPGACC46	R/W	–	√	√	0000H
F05DDH		RPGACC46H			–	√		
F05DEH	CAN RAM test register 47 Note 1	RPGACC47L	RPGACC47	R/W	–	√	√	0000H
F05DFH		RPGACC47H			–	√		
F05E0H	CAN RAM test register 48 Note 1	RPGACC48L	RPGACC48	R/W	–	√	√	0000H
F05E1H		RPGACC48H			–	√		
F05E0H	CAN0 transmit/receive FIFO access register 0AL Note 2	CFIDL0L	CFIDL0	R/W	–	√	√	0000H
F05E1H		CFIDL0H			–	√		
F05E2H	CAN RAM test register 49 Note 1	RPGACC49L	RPGACC49	R/W	–	√	√	0000H
F05E3H		RPGACC49H			–	√		
F05E2H	CAN0 transmit/receive FIFO access register 0AH Note 2	CFIDH0L	CFIDH0	R/W	–	√	√	0000H
F05E3H		CFIDH0H			–	√		
F05E4H	CAN RAM test register 50 Note 1	RPGACC50L	RPGACC50	R/W	–	√	√	0000H
F05E5H		RPGACC50H			–	√		
F05E4H	CAN0 transmit/receive FIFO access register 0BL Note 2	CFTS0L	CFTS0	R	–	√	√	0000H
F05E5H		CFTS0H			–	√		
F05E6H	CAN RAM test register 51 Note 1	RPGACC51L	RPGACC51	R/W	–	√	√	0000H
F05E7H		RPGACC51H			–	√		
F05E6H	CAN0 transmit/receive FIFO access register 0BH Note 2	CFPTR0L	CFPTR0	R/W	–	√	√	0000H
F05E7H		CFPTR0H			–	√		
F05E8H	CAN RAM test register 52 Note 1	RPGACC52L	RPGACC52	R/W	–	√	√	0000H
F05E9H		RPGACC52H			–	√		

Notes 1. These registers are allocated to the RAM window 0 for the CAN module (receive rule and CAN RAM test register). When setting these registers, set the RPAGE bit in the GRWCR register to 0.

2. These registers are allocated to the RAM window 1 for the CAN module (receive buffer, receive FIFO buffer, transmit/receive FIFO buffer, transmit buffer, and transmit history data). When setting these registers, set the RPAGE bit in the GRWCR register to 1.

Table 3-6. Extended SFR (2nd SFR) List (26/32)

Address	Special Function Register (2nd SFR) Name	Symbol		R/W	Manipulable Bit Range			After reset
					1-bit	8-bit	16-bit	
F05E8H	CAN0 transmit/receive FIFO access register 0CL Note 2	CFDF00L	CFDF00	R/W	–	√	√	0000H
F05E9H		CFDF00H			–	√		
F05EAH	CAN RAM test register 53 Note 1	RPGACC53L	RPGACC53	R/W	–	√	√	0000H
F05EBH		RPGACC53H			–	√		
F05EAH	CAN0 transmit/receive FIFO access register 0CH Note 2	CFDF10L	CFDF10	R/W	–	√	√	0000H
F05EBH		CFDF10H			–	√		
F05ECH	CAN RAM test register 54 Note 1	RPGACC54L	RPGACC54	R/W	–	√	√	0000H
F05EDH		RPGACC54H			–	√		
F05ECH	CAN0 transmit/receive FIFO access register 0DL Note 2	CFDF20L	CFDF20	R/W	–	√	√	0000H
F05EDH		CFDF20H			–	√		
F05EEH	CAN RAM test register 55 Note 1	RPGACC55L	RPGACC55	R/W	–	√	√	0000H
F05EFH		RPGACC55H			–	√		
F05EEH	CAN0 transmit/receive FIFO access register 0DH Note 2	CFDF30L	CFDF30	R/W	–	√	√	0000H
F05EFH		CFDF30H			–	√		
F05F0H	CAN RAM test register 56 Note 1	RPGACC56L	RPGACC56	R/W	–	√	√	0000H
F05F1H		RPGACC56H			–	√		
F05F2H	CAN RAM test register 57 Note 1	RPGACC57L	RPGACC57	R/W	–	√	√	0000H
F05F3H		RPGACC57H			–	√		
F05F4H	CAN RAM test register 58 Note 1	RPGACC58L	RPGACC58	R/W	–	√	√	0000H
F05F5H		RPGACC58H			–	√		
F05F6H	CAN RAM test register 59 Note 1	RPGACC59L	RPGACC59	R/W	–	√	√	0000H
F05F7H		RPGACC59H			–	√		
F05F8H	CAN RAM test register 60 Note 1	RPGACC60L	RPGACC60	R/W	–	√	√	0000H
F05F9H		RPGACC60H			–	√		
F05FAH	CAN RAM test register 61 Note 1	RPGACC61L	RPGACC61	R/W	–	√	√	0000H
F05FBH		RPGACC61H			–	√		
F05FCH	CAN RAM test register 62 Note 1	RPGACC62L	RPGACC62	R/W	–	√	√	0000H
F05FDH		RPGACC62H			–	√		
F05FEH	CAN RAM test register 63 Note 1	RPGACC63L	RPGACC63	R/W	–	√	√	0000H
F05FFH		RPGACC63H			–	√		
F0600H	CAN RAM test register 64 Note 1	RPGACC64L	RPGACC64	R/W	–	√	√	0000H
F0601H		RPGACC64H			–	√		
F0600H	CAN0 transmit buffer register 0AL Note 2	TMIDL0L	TMIDL0	R/W	–	√	√	0000H
F0601H		TMIDL0H			–	√		
F0602H	CAN RAM test register 65 Note 1	RPGACC65L	RPGACC65	R/W	–	√	√	0000H
F0603H		RPGACC65H			–	√		
F0602H	CAN0 transmit buffer register 0AH Note 2	TMIDH0L	TMIDH0	R/W	–	√	√	0000H
F0603H		TMIDH0H			–	√		
F0604H	CAN RAM test register 66 Note 1	RPGACC66L	RPGACC66	R/W	–	√	√	0000H
F0605H		RPGACC66H			–	√		
F0606H	CAN RAM test register 67 Note 1	RPGACC67L	RPGACC67	R/W	–	√	√	0000H
F0607H		RPGACC67H			–	√		

Notes 1. These registers are allocated to the RAM window 0 for the CAN module (receive rule and CAN RAM test register). When setting these registers, set the RPAGE bit in the GRWCR register to 0.

2. These registers are allocated to the RAM window 1 for the CAN module (receive buffer, receive FIFO buffer, transmit/receive FIFO buffer, transmit buffer, and transmit history data). When setting these registers, set the RPAGE bit in the GRWCR register to 1.

Table 3-6. Extended SFR (2nd SFR) List (27/32)

Address	Special Function Register (2nd SFR) Name	Symbol		R/W	Manipulable Bit Range			After reset
					1-bit	8-bit	16-bit	
F0606H	CAN0 transmit buffer register 0BH Note 2	TMPTR0L	TMPTR0	R/W	–	√	√	0000H
F0607H		TMPTR0H			–	√		
F0608H	CAN RAM test register 68 Note 1	RPGACC68L	RPGACC68	R/W	–	√	√	0000H
F0609H		RPGACC68H			–	√		
F0608H	CAN0 transmit buffer register 0CL Note 2	TMDF00L	TMDF00	R/W	–	√	√	0000H
F0609H		TMDF00H			–	√		
F060AH	CAN RAM test register 69 Note 1	RPGACC69L	RPGACC69	R/W	–	√	√	0000H
F060BH		RPGACC69H			–	√		
F060AH	CAN0 transmit buffer register 0CH Note 2	TMDF10L	TMDF10	R/W	–	√	√	0000H
F060BH		TMDF10H			–	√		
F060CH	CAN RAM test register 70 Note 1	RPGACC70L	RPGACC70	R/W	–	√	√	0000H
F060DH		RPGACC70H			–	√		
F060CH	CAN0 transmit buffer register 0DL Note 2	TMDF20L	TMDF20	R/W	–	√	√	0000H
F060DH		TMDF20H			–	√		
F060EH	CAN RAM test register 71 Note 1	RPGACC71L	RPGACC71	R/W	–	√	√	0000H
F060FH		RPGACC71H			–	√		
F060EH	CAN0 transmit buffer register 0DH Note 2	TMDF30L	TMDF30	R/W	–	√	√	0000H
F060FH		TMDF30H			–	√		
F0610H	CAN RAM test register 72 Note 1	RPGACC72L	RPGACC72	R/W	–	√	√	0000H
F0611H		RPGACC72H			–	√		
F0610H	CAN0 transmit buffer register 1AL Note 2	TMIDL1L	TMIDL1	R/W	–	√	√	0000H
F0611H		TMIDL1H			–	√		
F0612H	CAN RAM test register 73 Note 1	RPGACC73L	RPGACC73	R/W	–	√	√	0000H
F0613H		RPGACC73H			–	√		
F0612H	CAN0 transmit buffer register 1AH Note 2	TMIDH1L	TMIDH1	R/W	–	√	√	0000H
F0613H		TMIDH1H			–	√		
F0614H	CAN RAM test register 74 Note 1	RPGACC74L	RPGACC74	R/W	–	√	√	0000H
F0615H		RPGACC74H			–	√		
F0616H	CAN RAM test register 75 Note 1	RPGACC75L	RPGACC75	R/W	–	√	√	0000H
F0617H		RPGACC75H			–	√		
F0616H	CAN0 transmit buffer register 1BH Note 2	TMPTR1L	TMPTR1	R/W	–	√	√	0000H
F0617H		TMPTR1H			–	√		
F0618H	CAN RAM test register 76 Note 1	RPGACC76L	RPGACC76	R/W	–	√	√	0000H
F0619H		RPGACC76H			–	√		
F0618H	CAN0 transmit buffer register 1CL Note 2	TMDF01L	TMDF01	R/W	–	√	√	0000H
F0619H		TMDF01H			–	√		
F061AH	CAN RAM test register 77 Note 1	RPGACC77L	RPGACC77	R/W	–	√	√	0000H
F061BH		RPGACC77H			–	√		
F061AH	CAN0 transmit buffer register 1CH Note 2	TMDF11L	TMDF11	R/W	–	√	√	0000H
F061BH		TMDF11H			–	√		
F061CH	CAN RAM test register 78 Note 1	RPGACC78L	RPGACC78	R/W	–	√	√	0000H
F061DH		RPGACC78H			–	√		

Notes 1. These registers are allocated to the RAM window 0 for the CAN module (receive rule and CAN RAM test register). When setting these registers, set the RPAGE bit in the GRWCR register to 0.

2. These registers are allocated to the RAM window 1 for the CAN module (receive buffer, receive FIFO buffer, transmit/receive FIFO buffer, transmit buffer, and transmit history data). When setting these registers, set the RPAGE bit in the GRWCR register to 1.

Table 3-6. Extended SFR (2nd SFR) List (28/32)

Address	Special Function Register (2nd SFR) Name	Symbol		R/W	Manipulable Bit Range			After reset
					1-bit	8-bit	16-bit	
F061CH	CAN0 transmit buffer register 1DL Note 2	TMDF21L	TMDF21	R/W	–	√	√	0000H
F061DH		TMDF21H			–	√		
F061EH	CAN RAM test register 79 Note 1	RPGACC79L	RPGACC79	R/W	–	√	√	0000H
F061FH		RPGACC79H			–	√		
F061EH	CAN0 transmit buffer register 1DH Note 2	TMDF31L	TMDF31	R/W	–	√	√	0000H
F061FH		TMDF31H			–	√		
F0620H	CAN RAM test register 80 Note 1	RPGACC80L	RPGACC80	R/W	–	√	√	0000H
F0621H		RPGACC80H			–	√		
F0620H	CAN0 transmit buffer register 2AL Note 2	TMIDL2L	TMIDL2	R/W	–	√	√	0000H
F0621H		TMIDL2H			–	√		
F0622H	CAN RAM test register 81 Note 1	RPGACC81L	RPGACC81	R/W	–	√	√	0000H
F0623H		RPGACC81H			–	√		
F0622H	CAN0 transmit buffer register 2AH Note 2	TMIDH2L	TMIDH2	R/W	–	√	√	0000H
F0623H		TMIDH2H			–	√		
F0624H	CAN RAM test register 82 Note 1	RPGACC82L	RPGACC82	R/W	–	√	√	0000H
F0625H		RPGACC82H			–	√		
F0626H	CAN RAM test register 83 Note 1	RPGACC83L	RPGACC83	R/W	–	√	√	0000H
F0627H		RPGACC83H			–	√		
F0626H	CAN0 transmit buffer register 2BH Note 2	TMPTR2L	TMPTR2	R/W	–	√	√	0000H
F0627H		TMPTR2H			–	√		
F0628H	CAN RAM test register 84 Note 1	RPGACC84L	RPGACC84	R/W	–	√	√	0000H
F0629H		RPGACC84H			–	√		
F0628H	CAN0 transmit buffer register 2CL Note 2	TMDF02L	TMDF02	R/W	–	√	√	0000H
F0629H		TMDF02H			–	√		
F062AH	CAN RAM test register 85 Note 1	RPGACC85L	RPGACC85	R/W	–	√	√	0000H
F062BH		RPGACC85H			–	√		
F062AH	CAN0 transmit buffer register 2CH Note 2	TMDF12L	TMDF12	R/W	–	√	√	0000H
F062BH		TMDF12H			–	√		
F062CH	CAN RAM test register 86 Note 1	RPGACC86L	RPGACC86	R/W	–	√	√	0000H
F062DH		RPGACC86H			–	√		
F062CH	CAN0 transmit buffer register 2DL Note 2	TMDF22L	TMDF22	R/W	–	√	√	0000H
F062DH		TMDF22H			–	√		
F062EH	CAN RAM test register 87 Note 1	RPGACC87L	RPGACC87	R/W	–	√	√	0000H
F062FH		RPGACC87H			–	√		
F062EH	CAN0 transmit buffer register 2DH Note 2	TMDF32L	TMDF32	R/W	–	√	√	0000H
F062FH		TMDF32H			–	√		
F0630H	CAN RAM test register 88 Note 1	RPGACC88L	RPGACC88	R/W	–	√	√	0000H
F0631H		RPGACC88H			–	√		
F0630H	CAN0 transmit buffer register 3AL Note 2	TMIDL3L	TMIDL3	R/W	–	√	√	0000H
F0631H		TMIDL3H			–	√		
F0632H	CAN RAM test register 89 Note 1	RPGACC89L	RPGACC89	R/W	–	√	√	0000H
F0633H		RPGACC89H			–	√		

Notes 1. These registers are allocated to the RAM window 0 for the CAN module (receive rule and CAN RAM test register). When setting these registers, set the RPAGE bit in the GRWCR register to 0.

2. These registers are allocated to the RAM window 1 for the CAN module (receive buffer, receive FIFO buffer, transmit/receive FIFO buffer, transmit buffer, and transmit history data). When setting these registers, set the RPAGE bit in the GRWCR register to 1.

Table 3-6. Extended SFR (2nd SFR) List (29/32)

Address	Special Function Register (2nd SFR) Name	Symbol		R/W	Manipulable Bit Range			After reset
					1-bit	8-bit	16-bit	
F0632H	CAN0 transmit buffer register 3AH Note 2	TMIDH3L	TMIDH3	R/W	–	√	√	0000H
F0633H		TMIDH3H			–	√		
F0634H	CAN RAM test register 90 Note 1	RPGACC90L	RPGACC90	R/W	–	√	√	0000H
F0635H		RPGACC90H			–	√		
F0636H	CAN RAM test register 91 Note 1	RPGACC91L	RPGACC91	R/W	–	√	√	0000H
F0637H		RPGACC91H			–	√		
F0636H	CAN0 transmit buffer register 3BH Note 2	TMPTR3L	TMPTR3	R/W	–	√	√	0000H
F0637H		TMPTR3H			–	√		
F0638H	CAN RAM test register 92 Note 1	RPGACC92L	RPGACC92	R/W	–	√	√	0000H
F0639H		RPGACC92H			–	√		
F0638H	CAN0 transmit buffer register 3CL Note 2	TMDF03L	TMDF03	R/W	–	√	√	0000H
F0639H		TMDF03H			–	√		
F063AH	CAN RAM test register 93 Note 1	RPGACC93L	RPGACC93	R/W	–	√	√	0000H
F063BH		RPGACC93H			–	√		
F063AH	CAN0 transmit buffer register 3CH Note 2	TMDF13L	TMDF13	R/W	–	√	√	0000H
F063BH		TMDF13H			–	√		
F063CH	CAN RAM test register 94 Note 1	RPGACC94L	RPGACC94	R/W	–	√	√	0000H
F063DH		RPGACC94H			–	√		
F063CH	CAN0 transmit buffer register 3DL Note 2	TMDF23L	TMDF23	R/W	–	√	√	0000H
F063DH		TMDF23H			–	√		
F063EH	CAN RAM test register 95 Note 1	RPGACC95L	RPGACC95	R/W	–	√	√	0000H
F063FH		RPGACC95H			–	√		
F063EH	CAN0 transmit buffer register 3DH Note 2	TMDF33L	TMDF33	R/W	–	√	√	0000H
F063FH		TMDF33H			–	√		
F0640H	CAN RAM test register 96 Note 1	RPGACC96L	RPGACC96	R/W	–	√	√	0000H
F0641H		RPGACC96H			–	√		
F0642H	CAN RAM test register 97 Note 1	RPGACC97L	RPGACC97	R/W	–	√	√	0000H
F0643H		RPGACC97H			–	√		
F0644H	CAN RAM test register 98 Note 1	RPGACC98L	RPGACC98	R/W	–	√	√	0000H
F0645H		RPGACC98H			–	√		
F0646H	CAN RAM test register 99 Note 1	RPGACC99L	RPGACC99	R/W	–	√	√	0000H
F0647H		RPGACC99H			–	√		
F0648H	CAN RAM test register 100 Note 1	RPGACC100L	RPGACC100	R/W	–	√	√	0000H
F0649H		RPGACC100H			–	√		
F064AH	CAN RAM test register 101 Note 1	RPGACC101L	RPGACC101	R/W	–	√	√	0000H
F064BH		RPGACC101H			–	√		
F064CH	CAN RAM test register 102 Note 1	RPGACC102L	RPGACC102	R/W	–	√	√	0000H
F064DH		RPGACC102H			–	√		
F064EH	CAN RAM test register 103 Note 1	RPGACC103L	RPGACC103	R/W	–	√	√	0000H
F064FH		RPGACC103H			–	√		
F0650H	CAN RAM test register 104 Note 1	RPGACC104L	RPGACC104	R/W	–	√	√	0000H
F0651H		RPGACC104H			–	√		

Notes 1. These registers are allocated to the RAM window 0 for the CAN module (receive rule and CAN RAM test register). When setting these registers, set the RPAGE bit in the GRWCR register to 0.

2. These registers are allocated to the RAM window 1 for the CAN module (receive buffer, receive FIFO buffer, transmit/receive FIFO buffer, transmit buffer, and transmit history data). When setting these registers, set the RPAGE bit in the GRWCR register to 1.

Table 3-6. Extended SFR (2nd SFR) List (30/32)

Address	Special Function Register (2nd SFR) Name	Symbol		R/W	Manipulable Bit Range			After reset
					1-bit	8-bit	16-bit	
F0652H	CAN RAM test register 105 Note	RPGACC105L	RPGACC105	R/W	–	√	√	0000H
F0653H		RPGACC105H			–	√		
F0654H	CAN RAM test register 106 Note	RPGACC106L	RPGACC106	R/W	–	√	√	0000H
F0655H		RPGACC106H			–	√		
F0656H	CAN RAM test register 107 Note	RPGACC107L	RPGACC107	R/W	–	√	√	0000H
F0657H		RPGACC107H			–	√		
F0658H	CAN RAM test register 108 Note	RPGACC108L	RPGACC108	R/W	–	√	√	0000H
F0659H		RPGACC108H			–	√		
F065AH	CAN RAM test register 109 Note	RPGACC109L	RPGACC109	R/W	–	√	√	0000H
F065BH		RPGACC109H			–	√		
F065CH	CAN RAM test register 110 Note	RPGACC110L	RPGACC110	R/W	–	√	√	0000H
F065DH		RPGACC110H			–	√		
F065EH	CAN RAM test register 111 Note	RPGACC111L	RPGACC111	R/W	–	√	√	0000H
F065FH		RPGACC111H			–	√		
F0660H	CAN RAM test register 112 Note	RPGACC112L	RPGACC112	R/W	–	√	√	0000H
F0661H		RPGACC112H			–	√		
F0662H	CAN RAM test register 113 Note	RPGACC113L	RPGACC113	R/W	–	√	√	0000H
F0663H		RPGACC113H			–	√		
F0664H	CAN RAM test register 114 Note	RPGACC114L	RPGACC114	R/W	–	√	√	0000H
F0665H		RPGACC114H			–	√		
F0666H	CAN RAM test register 115 Note	RPGACC115L	RPGACC115	R/W	–	√	√	0000H
F0667H		RPGACC115H			–	√		
F0668H	CAN RAM test register 116 Note	RPGACC116L	RPGACC116	R/W	–	√	√	0000H
F0669H		RPGACC116H			–	√		
F066AH	CAN RAM test register 117 Note	RPGACC117L	RPGACC117	R/W	–	√	√	0000H
F066BH		RPGACC117H			–	√		
F066CH	CAN RAM test register 118 Note	RPGACC118L	RPGACC118	R/W	–	√	√	0000H
F066DH		RPGACC118H			–	√		
F066EH	CAN RAM test register 119 Note	RPGACC119L	RPGACC119	R/W	–	√	√	0000H
F066FH		RPGACC119H			–	√		
F0670H	CAN RAM test register 120 Note	RPGACC120L	RPGACC120	R/W	–	√	√	0000H
F0671H		RPGACC120H			–	√		
F0672H	CAN RAM test register 121 Note	RPGACC121L	RPGACC121	R/W	–	√	√	0000H
F0673H		RPGACC121H			–	√		
F0674H	CAN RAM test register 122 Note	RPGACC122L	RPGACC122	R/W	–	√	√	0000H
F0675H		RPGACC122H			–	√		
F0676H	CAN RAM test register 123 Note	RPGACC123L	RPGACC123	R/W	–	√	√	0000H
F0677H		RPGACC123H			–	√		
F0678H	CAN RAM test register 124 Note	RPGACC124L	RPGACC124	R/W	–	√	√	0000H
F0679H		RPGACC124H			–	√		
F067AH	CAN RAM test register 125 Note	RPGACC125L	RPGACC125	R/W	–	√	√	0000H
F067BH		RPGACC125H			–	√		
F067CH	CAN RAM test register 126 Note	RPGACC126L	RPGACC126	R/W	–	√	√	0000H
F067DH		RPGACC126H			–	√		
F067EH	CAN RAM test register 127 Note	RPGACC127L	RPGACC127	R/W	–	√	√	0000H
F067FH		RPGACC127H			–	√		

Note These registers are allocated to the RAM window 0 for the CAN module (receive rule and CAN RAM test register). When setting these registers, set the RPAGE bit in the GRWCR register to 0.

Table 3-6. Extended SFR (2nd SFR) List (31/32)

Address	Special Function Register (2nd SFR) Name	Symbol		R/W	Manipulable Bit Range			After reset
					1-bit	8-bit	16-bit	
F0680H	CAN0 transmit history buffer access register Note	THLACC0L	THLACC0	R	–	√	√	0000H
F0681H		THLACC0H			–	√		
F06C1H	LIN wakeup baud rate select register	LWBR0/LWBR1		R/W	–	√	–	00H
F06C2H	LIN/UART baud rate prescaler 0 register	LBRP00/LBRP10	LBRP0/ LBRP1	R/W	–	√	√	00H
F06C3H	LIN/UART baud rate prescaler 1 register	LBRP01/LBRP11		R/W	–	√		00H
F06C4H	LIN self–test control register	LSTC0/LSTC1		R/W	–	√	–	00H
F06C5H	UART standby control register	LUSC0/LUSC1		R/W	–	√	–	00H
F06C8H	LIN/UART mode register	LMD0/LMD1		R/W	–	√	–	00H
<R> F06C9H	LIN break field configuration register/ UART configuration register	LBFC0/LBFC1		R/W	–	√	–	00H
F06CAH	LIN/UART space configuration register	LSC0/LSC1		R/W	–	√	–	00H
F06CBH	LIN wakeup configuration register	LWUP0/LWUP1		R/W	–	√	–	00H
F06CCH	LIN interrupt enable register	LIE0/LIE1		R/W	–	√	–	00H
F06CDH	LIN/UART error detection enable register	LEDE0/LEDE1		R/W	–	√	–	00H
F06CEH	LIN/UART control register	LCUC0/LCUC1		R/W	–	√	–	00H
F06D0H	LIN/UART transmit control register	LTRC0/LTRC1		R/W	–	√	–	00H
F06D1H	LIN/UART mode status register	LMST0/LMST1		R	–	√	–	00H
F06D2H	LIN/UART status register	LST0/LST1		R/W	–	√	–	00H
F06D3H	LIN/UART error status register	LEST0/LEST1		R/W	–	√	–	00H
F06D4H	LIN/UART data field configuration register	LDFC0/LDFC1		R/W	–	√	–	00H
F06D5H	LIN/UART ID buffer register	LIDB0/LIDB1		R/W	–	√	–	00H
F06D6H	LIN checksum buffer register	LCBR0/LCBR1		R/W	–	√	–	00H
F06D7H	UART data buffer 0 register	LUDB00/LUDB10		R/W	–	√	–	00H
F06D8H	LIN/UART data buffer 1 register	LDB01/LDB11		R/W	–	√	–	00H
F06D9H	LIN/UART data buffer 2 register	LDB02/LDB12		R/W	–	√	–	00H
F06DAH	LIN/UART data buffer 3 register	LDB03/LDB13		R/W	–	√	–	00H
F06DBH	LIN/UART data buffer 4 register	LDB04/LDB14		R/W	–	√	–	00H
F06DCH	LIN/UART data buffer 5 register	LDB05/LDB15		R/W	–	√	–	00H
F06DDH	LIN/UART data buffer 6 register	LDB06/LDB16		R/W	–	√	–	00H
F06DEH	LIN/UART data buffer 7 register	LDB07/LDB17		R/W	–	√	–	00H
F06DFH	LIN/UART data buffer 8 register	LDB08/LDB18		R/W	–	√	–	00H
F06E0H	UART operation enable register	LUOER0/LUOER1		R/W	–	√	–	00H
F06E1H	UART option register 1	LUOR01/LUOR11		R/W	–	√	–	00H
F06E4H	UART transmit data register	LUTDR0L/ LUTDR1L	LUTDR0/ LUTDR1	R/W	–	√	√	0000H
F06E5H		LUTDR0H/ LUTDR1H			–	√		
F06E6H	UART receive data register	LURDR0L/ LURDR1L	LURDR0/ LURDR1	R	–	√	√	0000H
F06E7H		LURDR0H/ LURDR1H			–	√		

Note These registers are allocated to the RAM window 1 for the CAN module (receive buffer, receive FIFO buffer, transmit/receive FIFO buffer, transmit buffer, and transmit history data). When setting these registers, set the RPAGE bit in the GRWCR register to 1.

Table 3-6. Extended SFR (2nd SFR) List (32/32)

Address	Special Function Register (2nd SFR) Name	Symbol		R/W	Manipulable Bit Range			After reset
					1-bit	8-bit	16-bit	
F06E8H	UART wait transmit data register	LUWTDR0L/ LUWTDR1L	LUWTDR0/ LUWTDR1	R/W	–	√	√	0000H
F06E9H		LUWTDR0H/ LUWTDR1H			–	√		
F06F0H	Timer RJ counter register 0	TRJ0		R/W	–	–	√	FFFFH
F06F1H								
F0780H	Event output destination select register 00	ELSELR00		R/W	√	√	–	00H
F0781H	Event output destination select register 01	ELSELR01		R/W	√	√	–	00H
F0782H	Event output destination select register 02	ELSELR02		R/W	√	√	–	00H
F0783H	Event output destination select register 03	ELSELR03		R/W	√	√	–	00H
F0784H	Event output destination select register 04	ELSELR04		R/W	√	√	–	00H
F0785H	Event output destination select register 05	ELSELR05		R/W	√	√	–	00H
F0786H	Event output destination select register 06	ELSELR06		R/W	√	√	–	00H
F0787H	Event output destination select register 07	ELSELR07		R/W	√	√	–	00H
F0788H	Event output destination select register 08	ELSELR08		R/W	√	√	–	00H
F0789H	Event output destination select register 09/ A/D converter trigger select register 0 Note	ELSELR09/ADTRGS0 Note		R/W	√	√	–	00H
F078AH	Event output destination select register 10	ELSELR10		R/W	√	√	–	00H
F078BH	Event output destination select register 11	ELSELR11		R/W	√	√	–	00H
F078CH	Event output destination select register 12	ELSELR12		R/W	√	√	–	00H
F078DH	Event output destination select register 13/ A/D converter trigger select register 1 Note	ELSELR13/ADTRGS1 Note		R/W	√	√	–	00H
F078EH	Event output destination select register 14	ELSELR14		R/W	√	√	–	00H
F078FH	Event output destination select register 15	ELSELR15		R/W	√	√	–	00H
F0790H	Event output destination select register 16	ELSELR16		R/W	√	√	–	00H
F0791H	Event output destination select register 17	ELSELR17		R/W	√	√	–	00H
F0792H	Event output destination select register 18	ELSELR18		R/W	√	√	–	00H
F0793H	Event output destination select register 19	ELSELR19		R/W	√	√	–	00H
F0794H	Event output destination select register 20	ELSELR20		R/W	√	√	–	00H
F0795H	Event output destination select register 21	ELSELR21		R/W	√	√	–	00H
F0796H	Event output destination select register 22	ELSELR22		R/W	√	√	–	00H
F0797H	Event output destination select register 23	ELSELR23		R/W	√	√	–	00H
F0798H	Event output destination select register 24	ELSELR24		R/W	√	√	–	00H
F0799H	Event output destination select register 25	ELSELR25		R/W	√	√	–	00H

Note RL78/F13 only.

Remark For SFRs in the SFR area, see **Table 3-5 SFR List**.

3.3 Instruction Address Addressing

3.3.1 Relative addressing

[Function]

Relative addressing stores in the program counter (PC) the result of adding a displacement value included in the instruction word (signed complement data: –128 to +127 or –32768 to +32767) to the program counter (PC)'s value (the start address of the next instruction), and specifies the program address to be used as the branch destination. Relative addressing is applied only to branch instructions.

Figure 3-42. Outline of Relative Addressing

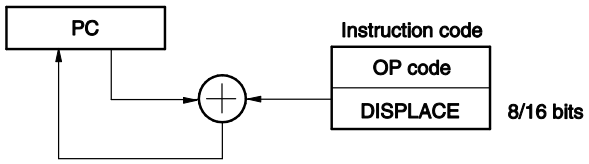

3.3.2 Immediate addressing

[Function]

Immediate addressing stores immediate data of the instruction word in the program counter, and specifies the program address to be used as the branch destination.

For immediate addressing, CALL !!addr20 or BR !!addr20 is used to specify 20-bit addresses and CALL !addr16 or BR !addr16 is used to specify 16-bit addresses. 0000 is set to the higher 4 bits when specifying 16-bit addresses.

Figure 3-43. Example of CALL !!addr20/BR !!addr20

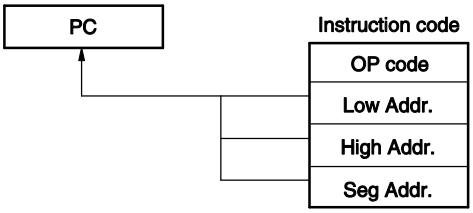

Figure 3-44. Example of CALL !addr16/BR !addr16

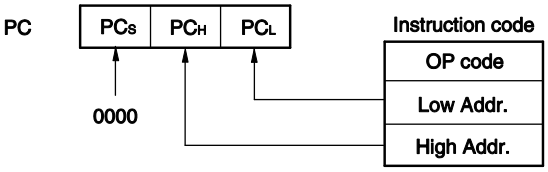

3.3.3 Table indirect addressing

[Function]

Table indirect addressing specifies a table address in the CALLT table area (0080H to 00BFH) with the 5-bit immediate data in the instruction word, stores the contents at that table address and the next address in the program counter (PC) as 16-bit data, and specifies the program address. Table indirect addressing is applied only for CALLT instructions.

In the RL78 microcontrollers, branching is enabled only to the 64 KB space from 00000H to 0FFFFH.

Figure 3-45. Outline of Table Indirect Addressing

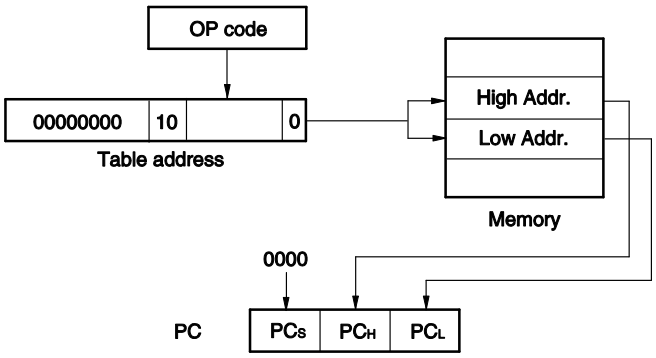

3.3.4 Register direct addressing

[Function]

Register direct addressing stores in the program counter (PC) the contents of a general-purpose register pair (AX/BC/DE/HL) and CS register of the current register bank specified with the instruction word as 20-bit data, and specifies the program address. Register direct addressing can be applied only to the CALL AX, BC, DE, HL, and BR AX instructions.

Figure 3-46. Outline of Register Direct Addressing

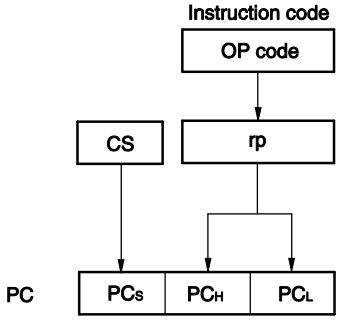

3.4 Addressing for Processing Data Addresses

3.4.1 Implied addressing

[Function]

Instructions for accessing registers (such as accumulators) that have special functions are directly specified with the instruction word, without using any register specification field in the instruction word.

[Operand format]

Implied addressing can be applied only to MULU X.

Figure 3-47. Outline of Implied Addressing

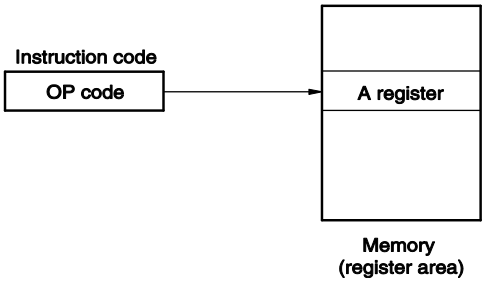

3.4.2 Register addressing

[Function]

Register addressing accesses a general-purpose register as an operand. The instruction word of 3-bit long is used to select an 8-bit register and the instruction word of 2-bit long is used to select a 16-bit register.

[Operand format]

Identifier	Description
r	X, A, C, B, E, D, L, H
rp	AX, BC, DE, HL

Figure 3-48. Outline of Register Addressing

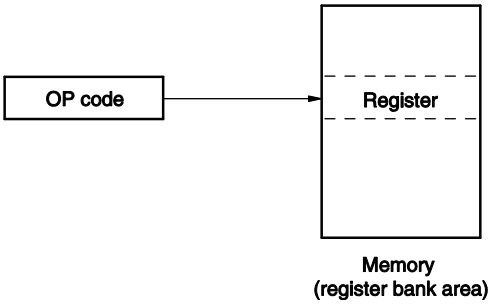

3.4.3 Direct addressing

[Function]

Direct addressing uses immediate data in the instruction word as an operand address to directly specify the target address.

[Operand format]

Identifier	Description
!addr16	Label or 16-bit immediate data (only the space from F0000H to FFFFFH is specifiable)
ES:!addr16	Label or 16-bit immediate data (higher 4-bit addresses are specified by the ES register)

Figure 3-49. Example of !addr16

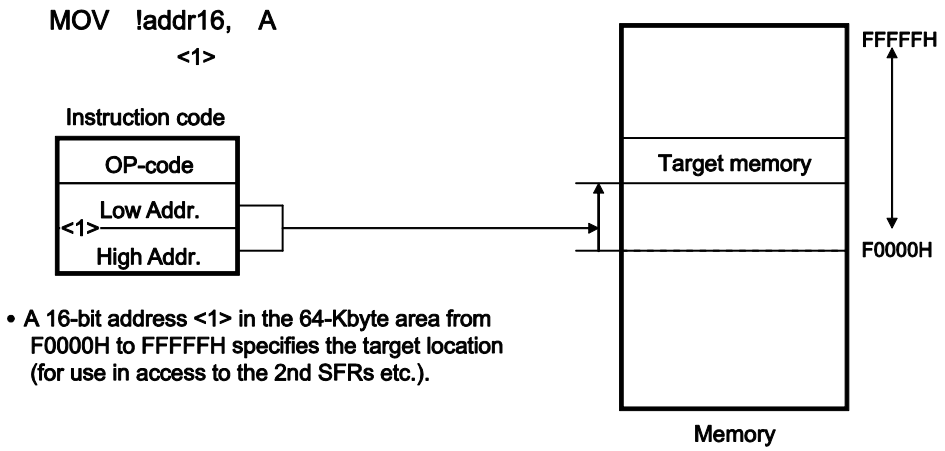

- A 16-bit address <1> in the 64-Kbyte area from F0000H to FFFFFH specifies the target location (for use in access to the 2nd SFRs etc.).

Figure 3-50. Example of ES:!addr16

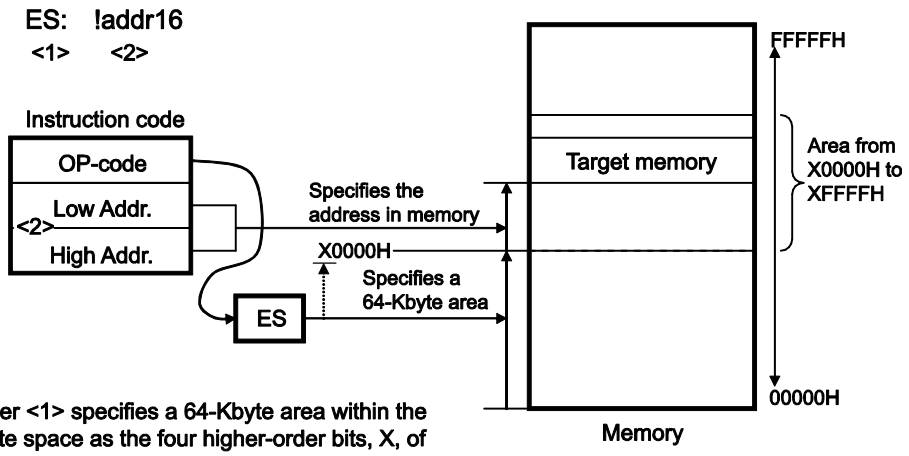

- The ES register <1> specifies a 64-Kbyte area within the overall 1-Mbyte space as the four higher-order bits, X, of the address range.
- A 16-bit address <2> in the area from X0000H to XFFFFH and the ES register <1> specify the target location; this is used for access to fixed data other than that in mirrored areas.

3.4.4 Short direct addressing

[Function]

Short direct addressing directly specifies the target addresses using 8-bit data in the instruction word. This type of addressing is applied only to the space from FFE20H to FFF1FH.

[Operand format]

Identifier	Description
SADDR	Label, FFE20H to FFF1FH immediate data, or 0FE20H to 0FF1FH immediate data (only the space from FFE20H to FFF1FH is specifiable)
SADDRP	Label, FFE20H to FFF1FH immediate data, or 0FE20H to 0FF1FH immediate data (even address only) (only the space from FFE20H to FFF1FH is specifiable)

Figure 3-51. Outline of Short Direct Addressing

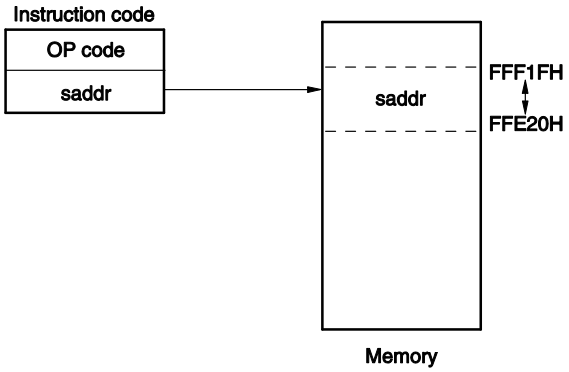

Remark SADDR and SADDRP are used to describe the values of addresses FE20H to FF1FH with 16-bit immediate data (higher 4 bits of actual address are omitted), and the values of addresses FFE20H to FFF1FH with 20-bit immediate data.
Regardless of whether SADDR or SADDRP is used, addresses within the space from FFE20H to FFF1FH are specified for the memory.

3.4.5 SFR addressing

[Function]

SFR addressing directly specifies the target SFR addresses using 8-bit data in the instruction word. This type of addressing is applied only to the space from FFF00H to FFFFFH.

[Operand format]

Identifier	Description
SFR	SFR name
SFRP	16-bit-manipulatable SFR name (even address)

Figure 3-52. Outline of SFR Addressing

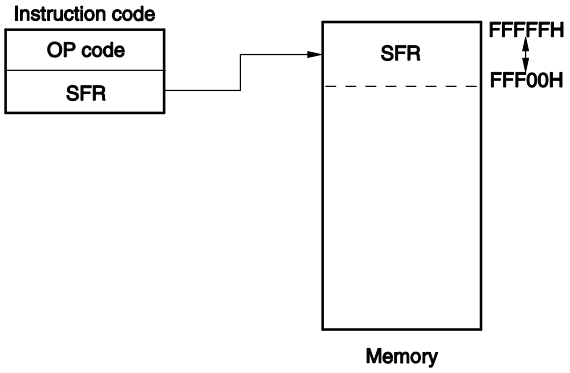

3.4.6 Register indirect addressing

[Function]

Register indirect addressing directly specifies the target addresses using the contents of the register pair specified with the instruction word as an operand address.

[Operand format]

Identifier	Description
–	[DE], [HL] (only the space from F0000H to FFFFFH is specifiable)
–	ES:[DE], ES:[HL] (higher 4-bit addresses are specified by the ES register)

Figure 3-53. Example of [DE], [HL]

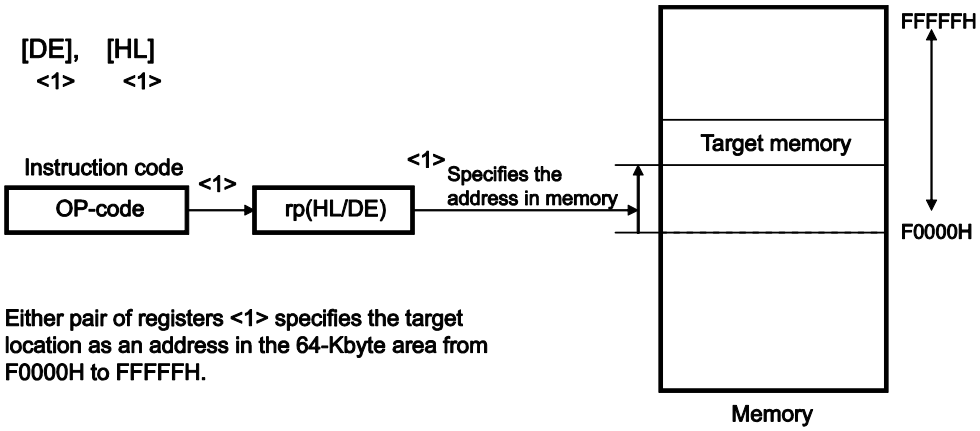

- Either pair of registers <1> specifies the target location as an address in the 64-Kbyte area from F0000H to FFFFFH.

Figure 3-54. Example of ES:[DE], ES:[HL]

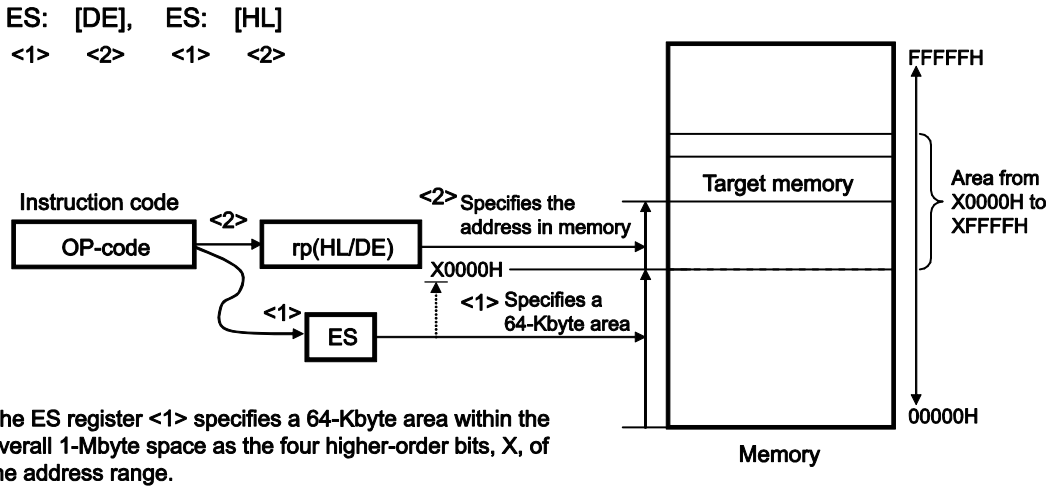

- The ES register <1> specifies a 64-Kbyte area within the overall 1-Mbyte space as the four higher-order bits, X, of the address range.
- Either pair of registers <2> and the ES register <1> specify the target location in the area from X0000H to XFFFFH.

3.4.7 Based addressing

[Function]

Based addressing uses the contents of a register pair specified with the instruction word or 16-bit immediate data as a base address, and 8-bit immediate data or 16-bit immediate data as offset data. The sum of these values is used to specify the target address.

[Operand format]

Identifier	Description
–	[HL + byte], [DE + byte], [SP + byte] (only the space from F0000H to FFFFFH is specifiable)
–	word[B], word[C] (only the space from F0000H to FFFFFH is specifiable)
–	word[BC] (only the space from F0000H to FFFFFH is specifiable)
–	ES:[HL + byte], ES:[DE + byte] (higher 4-bit addresses are specified by the ES register)
–	ES:word[B], ES:word[C] (higher 4-bit addresses are specified by the ES register)
–	ES:word[BC] (higher 4-bit addresses are specified by the ES register)

Figure 3-55. Example of [SP+byte]

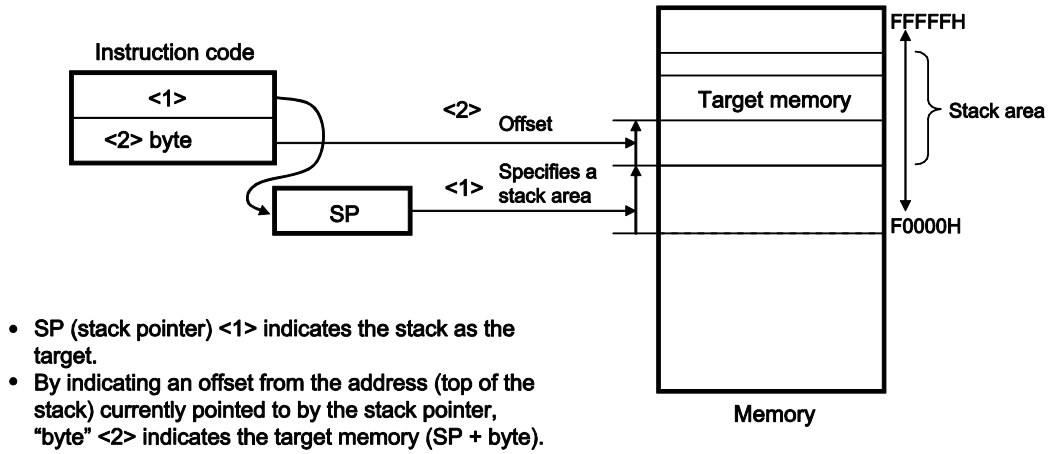

Figure 3-56. Example of [HL + byte], [DE + byte]

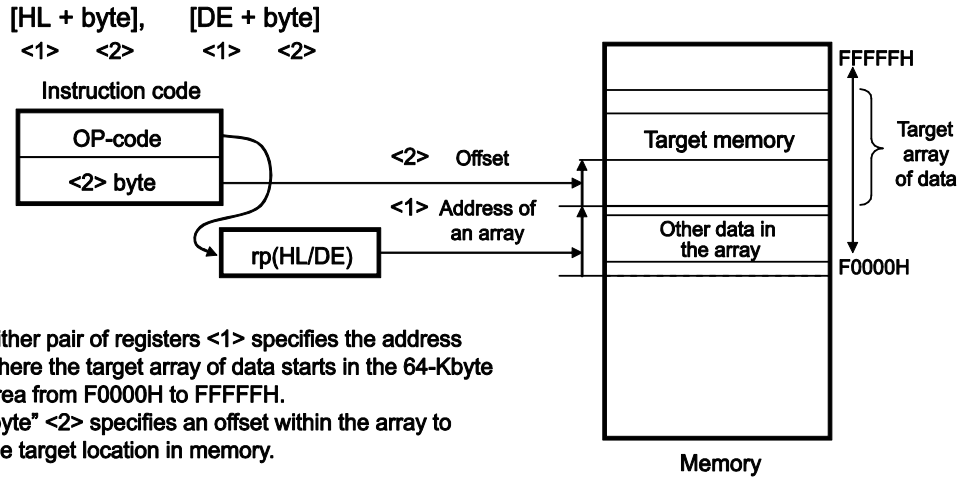

- Either pair of registers <1> specifies the address where the target array of data starts in the 64-Kbyte area from F0000H to FFFFFH.
- "byte" <2> specifies an offset within the array to the target location in memory.

Figure 3-57. Example of word[B], word[C]

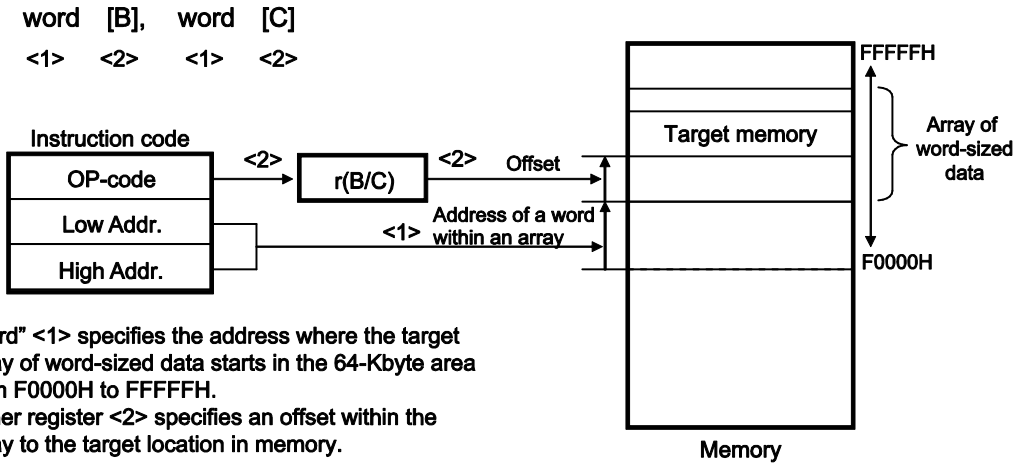

- "word" <1> specifies the address where the target array of word-sized data starts in the 64-Kbyte area from F0000H to FFFFFH.
- Either register <2> specifies an offset within the array to the target location in memory.

Figure 3-58. Example of word[BC]

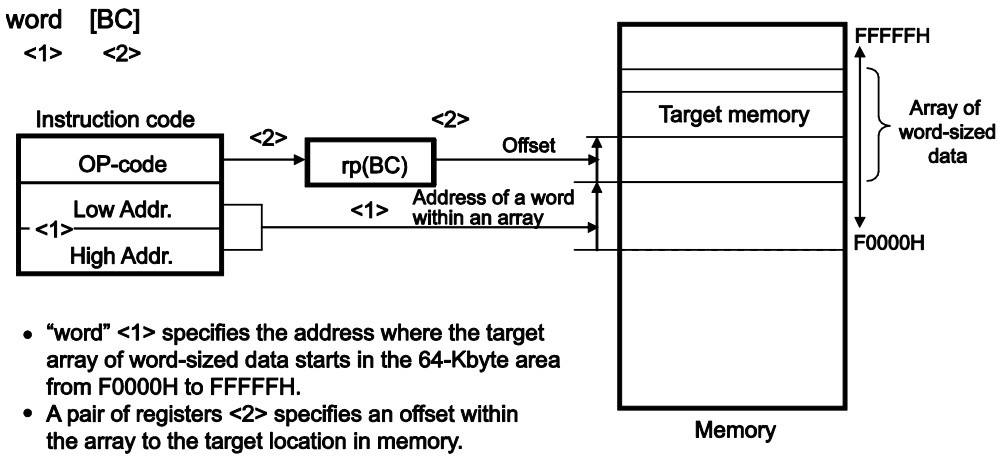

- "word" <1> specifies the address where the target array of word-sized data starts in the 64-Kbyte area from F0000H to FFFFFH.
- A pair of registers <2> specifies an offset within the array to the target location in memory.

Figure 3-59. Example of ES:[HL + byte], ES:[DE + byte]

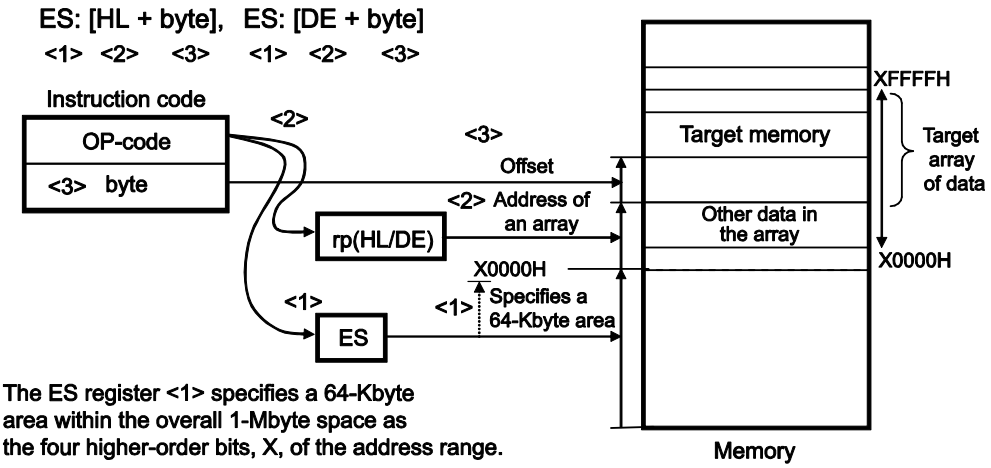

- The ES register <1> specifies a 64-Kbyte area within the overall 1-Mbyte space as the four higher-order bits, X, of the address range.
- Either pair of registers <2> specifies the address where the target array of data starts in the 64-Kbyte area specified in the ES register <1>.
- "byte" <3> specifies an offset within the array to the target location in memory.

Figure 3-60. Example of ES:word[B], ES:word[C]

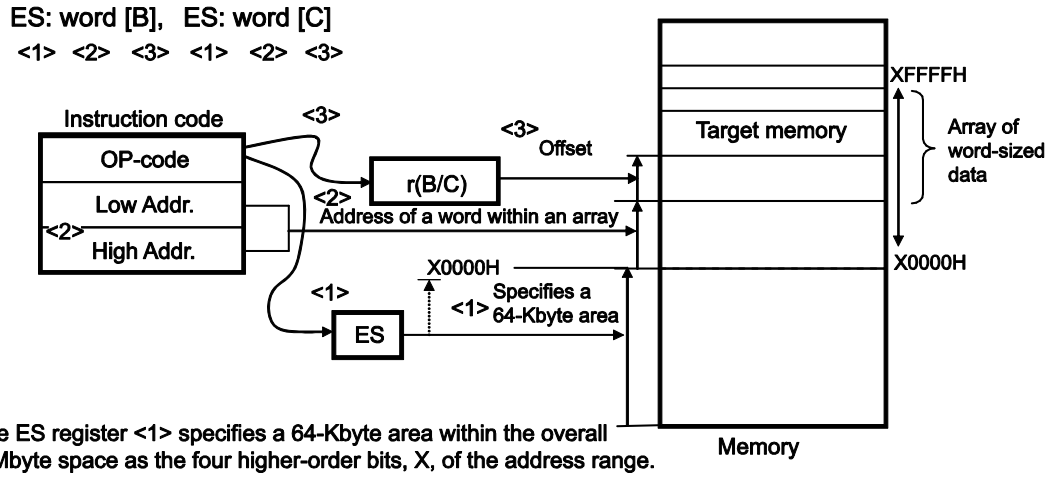

- The ES register <1> specifies a 64-Kbyte area within the overall 1-Mbyte space as the four higher-order bits, X, of the address range.
- "word" <2> specifies the address where the target array of word-sized data starts in the 64-Kbyte area specified in the ES register <1>.
- Either register <3> specifies an offset within the array to the target location in memory.

Figure 3-61. Example of ES:word[BC]

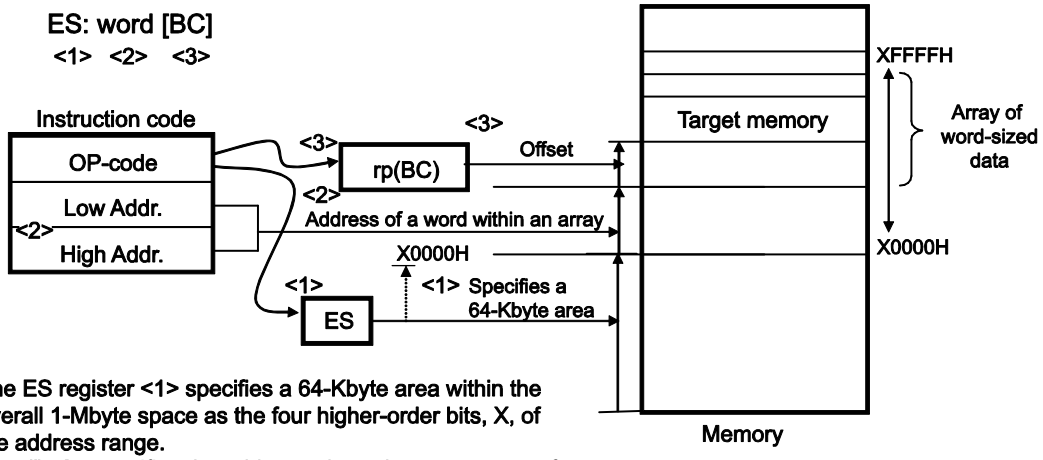

- The ES register <1> specifies a 64-Kbyte area within the overall 1-Mbyte space as the four higher-order bits, X, of the address range.
- "word" <2> specifies the address where the target array of word-sized data starts in the 64-Kbyte area specified in the ES register <1>.
- A pair of registers <3> specifies an offset within the array to the target location in memory.

3.4.8 Based indexed addressing

[Function]

Based indexed addressing uses the contents of a register pair specified with the instruction word as the base address, and the content of the B register or C register similarly specified with the instruction word as offset address. The sum of these values is used to specify the target address.

[Operand format]

Identifier	Description
–	[HL+B], [HL+C] (only the space from F0000H to FFFFFH is specifiable)
–	ES:[HL+B], ES:[HL+C] (higher 4-bit addresses are specified by the ES register)

Figure 3-62. Example of [HL+B], [HL+C]

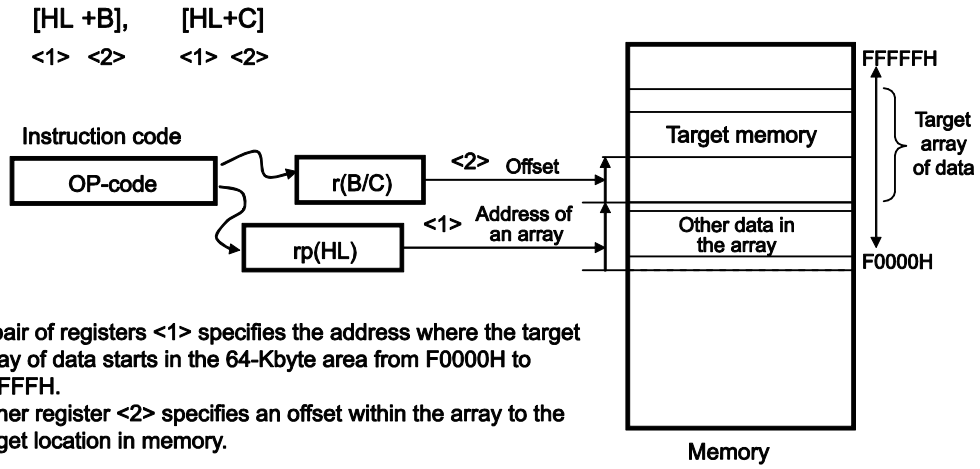

- A pair of registers <1> specifies the address where the target array of data starts in the 64-Kbyte area from F0000H to FFFFFH.
- Either register <2> specifies an offset within the array to the target location in memory.

Figure 3-63. Example of ES:[HL+B], ES:[HL+C]

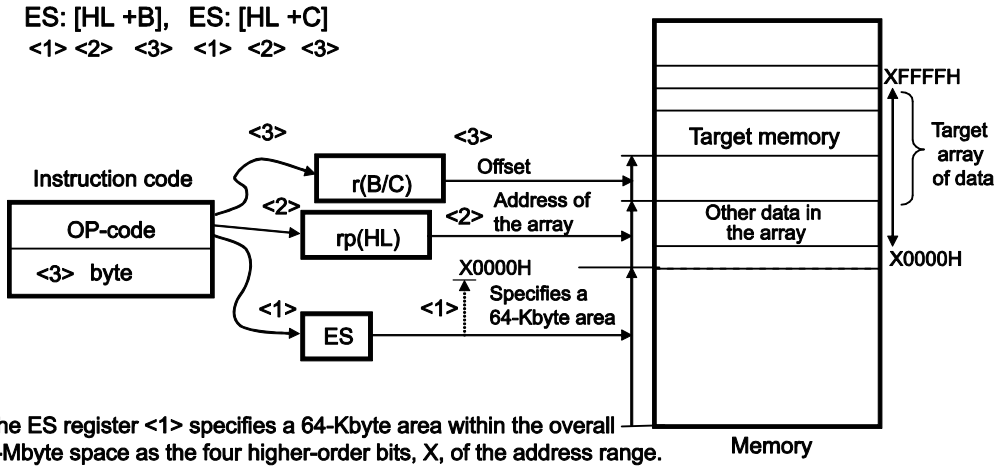

- The ES register <1> specifies a 64-Kbyte area within the overall 1-Mbyte space as the four higher-order bits, X, of the address range.
- A pair of registers <2> specifies the address where the target array of data starts in the 64-Kbyte area specified in the ES register <1>.
- Either register <3> specifies an offset within the array to the target location in memory.

3.4.9 Stack addressing

[Function]

The stack area is indirectly addressed with the stack pointer (SP) contents. This addressing is automatically employed when the PUSH, POP, subroutine call, and return instructions are executed or the register is saved/restored upon generation of an interrupt request.

Only the internal RAM area can be set as the stack area.

[Operand format]

Identifier	Description
–	PUSH PSW AX/BC/DE/HL POP PSW AX/BC/DE/HL CALL/CALLT RET BRK RETB (Interrupt request generated) RETI

Each stack operation saves or restores data as shown in **Figures 3-64** to **3-69**.

Figure 3-64. Example of PUSH rp

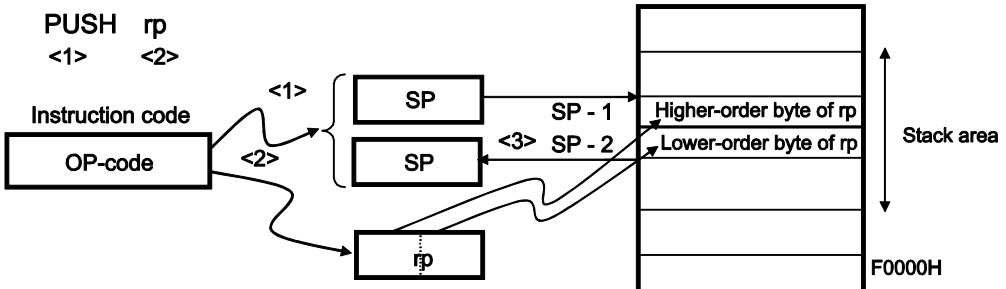

- Stack addressing is specified <1>.
- The higher-order and lower-order bytes of the pair of registers indicated by rp <2> are stored in addresses SP - 1 and SP - 2, respectively.
- The value of SP <3> is decreased by two (if rp is the program status word (PSW), the value of the PSW is stored in SP - 1 and 0 is stored in SP - 2).

Figure 3-65. Example of POP

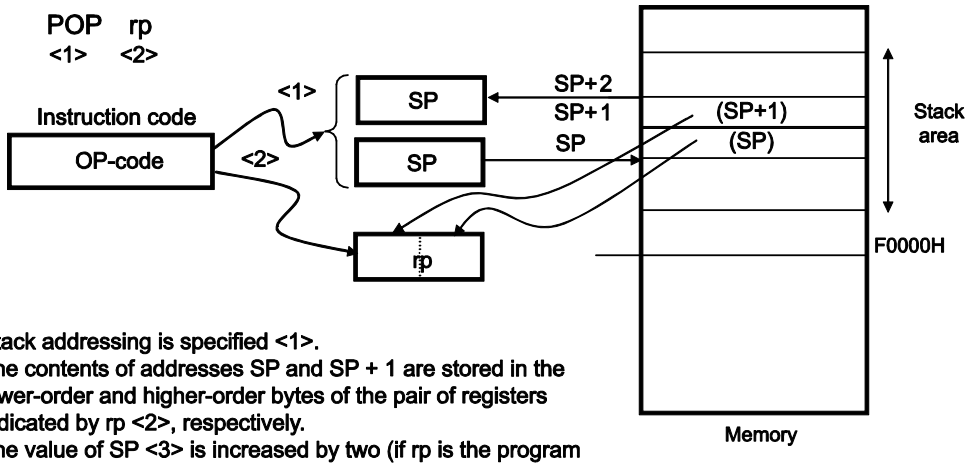

- Stack addressing is specified <1>.
- The contents of addresses SP and SP + 1 are stored in the lower-order and higher-order bytes of the pair of registers indicated by rp <2>, respectively.
- The value of SP <3> is increased by two (if rp is the program status word (PSW), the content of address SP + 1 is stored in the PSW).

Figure 3-66. Example of CALL, CALLT

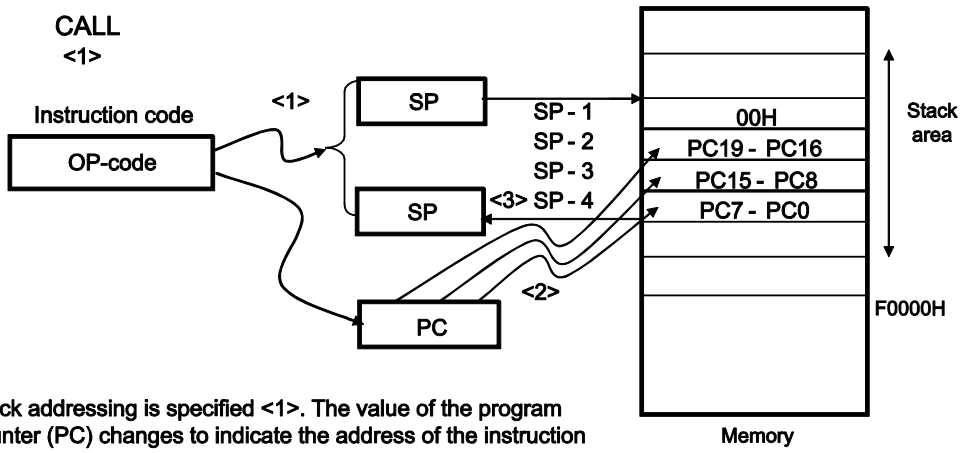

- Stack addressing is specified <1>. The value of the program counter (PC) changes to indicate the address of the instruction following the CALL instruction.
- 00H, the values of PC bits 19 to 16, 15 to 8, and 7 to 0 are stored in addresses SP - 1, SP - 2, SP - 3, and SP - 4, respectively <2>.
- The value of the SP <3> is decreased by 4.

Figure 3-67. Example of RET

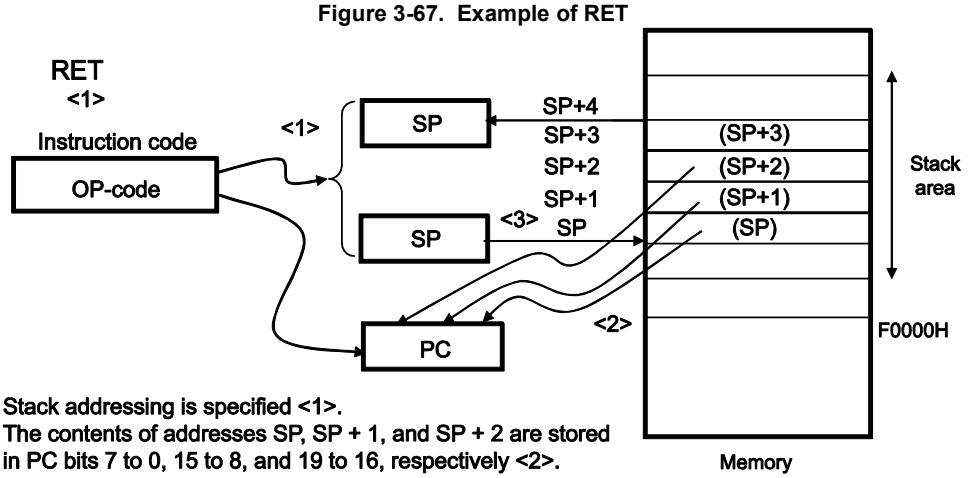

- Stack addressing is specified <1>.
- The contents of addresses SP, SP + 1, and SP + 2 are stored in PC bits 7 to 0, 15 to 8, and 19 to 16, respectively <2>.
- The value of SP <3> is increased by four.

Figure 3-68. Example of Interrupt, BRK

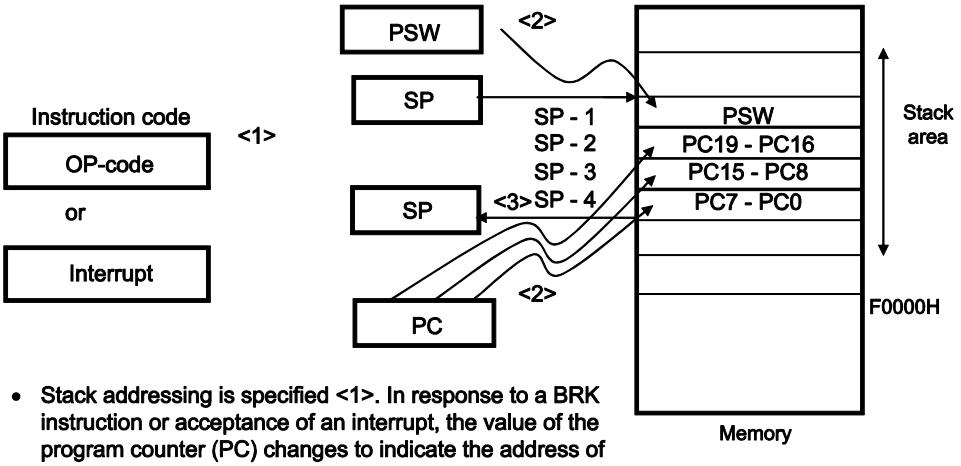

- Stack addressing is specified <1>. In response to a BRK instruction or acceptance of an interrupt, the value of the program counter (PC) changes to indicate the address of the next instruction.
- The values of the PSW, PC bits 19 to 16, 15 to 8, and 7 to 0 are stored in addresses SP - 1, SP - 2, SP - 3, and SP - 4, respectively <2>.
- The value of the SP <3> is decreased by 4.

Figure 3-69. Example of RETI, RETB

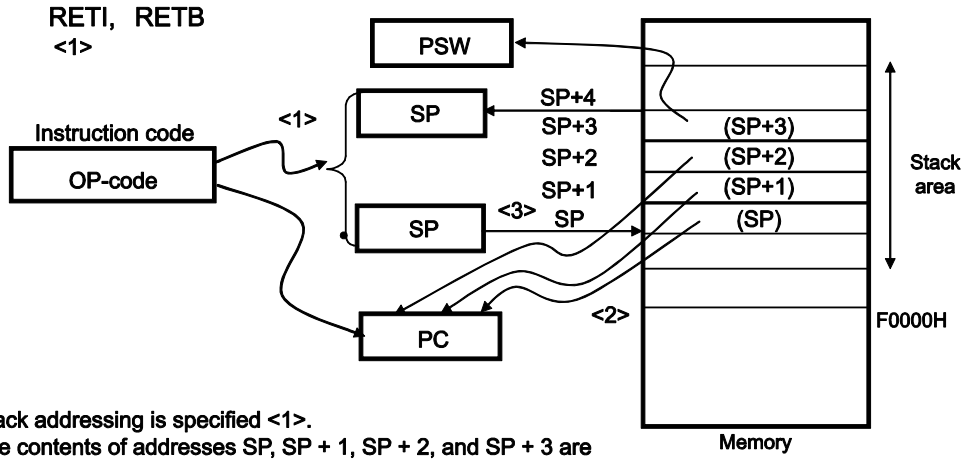

- Stack addressing is specified <1>.
- The contents of addresses SP, SP + 1, SP + 2, and SP + 3 are stored in PC bits 7 to 0, 15 to 8, 19 to 16, and the PSW, respectively <2>.
- The value of SP <3> is increased by four.

CHAPTER 4 PORT FUNCTIONS

4.1 Port Functions

Pin I/O buffer power supplies depend on the product. The relationship between power supplies and the pins is shown in table 4-1. EV_{DD} indicates EV_{DD0} and EV_{DD1}.

Table 4-1. Pin I/O Buffer Power Supplies

(1) 20-pin, 30-pin, 32-pin, 48-pin products

Power Supply	Corresponding Pins
V_{DD}	All pins

(2) 64-pin products

Power Supply	Corresponding Pins
EV_{DD0}	Port pins other than P33, P34, P80 to P87, P90 to P96 Note, P121 to P124, and P137
V_{DD}	• P33, P34, P80 to P87, P90 to P96 Note, P121 to P124, and P137 • Pins other than port pins

Note In R5F10PLE, R5F10PLF, R5F10BLC, R5F10BLD, R5F10BLE, R5F10BLF, R5F10BLG, R5F10ALF, and R5F10ALG, the power supply for P96 is EV_{DD0}. In R5F10ALC, R5F10ALD, and R5F10ALE, the power supply for P92 to P97 is EV_{DD0}.

(3) 80-pin products

Power Supply	Corresponding Pins
EV_{DD0}	Port pins other than P33, P34, P80 to P87, P90 to P97 Note, P121 to P124, and P137
V_{DD}	• P33, P34, P80 to P87, P90 to P97 Note, P121 to P124, and P137 • Pins other than port pins

Note In R5F10PME, R5F10PMF, R5F10BME, R5F10BMF, R5F10BMG, R5F10AME, R5F10AMF, and R5F10AMG, the power supply for P96 and P97 is EV_{DD0}.

(4) 100-pin products

Power Supply	Corresponding Pins
EV_{DD0}, EV_{DD1}	Port pins other than P33, P34, P80 to P87, P90 to P97, P100 to P105, P121 to P124, and P137
V_{DD}	• P33, P34, P80 to P87, P90 to P97, P100 to P105, P121 to P124, and P137 • Pins other than port pins

The products are classified into the following five groups according to the product type, pin count, and code flash memory size.

Group A: RL78/F13 (LIN incorporated) products with 20, 30, 32, 48, or 64 pins and 16 Kbytes to 64 Kbytes of code flash memory

Group B: RL78/F13 (LIN incorporated) products with 48 or 64 pins and 96 Kbytes to 128 Kbytes of code flash memory or with 80 pins and 64 Kbytes to 128 Kbytes of code flash memory

Group C: RL78/F13 (CAN and LIN incorporated) products with 30, 32, 48, 64, or 80 pins and 32 Kbytes to 128 Kbytes of code flash memory

Group D: RL78/F14 products with 30, 32, 48, 64, or 80 pins and 48 Kbytes to 96 Kbytes of code flash memory

Group E: RL78/F14 products with 48, 64, or 80 pins and 128 Kbytes to 256 Kbytes of code flash memory or with 100 pins and 64 Kbytes to 256 Kbytes of code flash memory

The RL78/F13 and RL78/F14 microcontrollers are provided with digital I/O ports, which enable variety of control operations.

In addition to the function as digital I/O ports, these ports have several alternate functions. For details of the alternate functions, see **CHAPTER 2 PIN FUNCTIONS**.

4.2 Port Configuration

Ports include the following hardware.

Table 4-2. Port Configuration

Item	Configuration
Control registers	Port mode registers (PM0, PM1, PM3 to PM10, PM12, PM14, PM15) Port registers (P0, P1, P3 to P10, P12 to P15) Pull-up resistor option registers (PU0, PU1, PU3 to PU7, PU9, PU10, PU12, PU14, PU15) Port input mode registers (PIM1, PIM3, PIM5 to PIM7, PIM12) Port output mode registers (POM1, POM6, POM7, POM12) Port mode control registers (PMC7, PMC9, PMC12) A/D port configuration register (ADPC) Peripheral I/O redirection registers (PIOR0 to PIOR8) Port input threshold control registers (PITHL1, PITHL3 to PITHL7, PITHL10, PITHL12, PITHL15) Port output slew rate select register (PSRSEL) SNOOZE status output control registers 0 to 3 (PSNZCNT0 to PSNZCNT3) Port mode select register (PMS)
Port	• 20-pin products Total: 16 (CMOS I/O: 13, CMOS input: 3) • 30-pin products Total: 26 (CMOS I/O: 23, CMOS input: 3) • 32-pin products Total: 28 (CMOS I/O: 25, CMOS input: 3) • 48-pin products Total: 44 (CMOS I/O: 38, CMOS input: 5, CMOS output: 1) • 64-pin products Total: 58 (CMOS I/O: 52, CMOS input: 5, CMOS output: 1) • 80-pin products Total: 74 (CMOS I/O: 68, CMOS input: 5, CMOS output: 1) • 100-pin products Total: 92 (CMOS I/O: 86, CMOS input: 5, CMOS output: 1)

Caution Most of the following descriptions in this chapter use the 100-pin products as an example.
In addition, the products are classified into the following five groups according to the product type, pin count, and code flash memory size.
Group A: RL78/F13 (LIN incorporated) products with 20, 30, 32, 48, or 64 pins and 16 Kbytes to 64 Kbytes of code flash memory
Group B: RL78/F13 (LIN incorporated) products with 48 or 64 pins and 96 Kbytes to 128 Kbytes of code flash memory or with 80 pins and 64 Kbytes to 128 Kbytes of code flash memory
Group C: RL78/F13 (CAN and LIN incorporated) products with 30, 32, 48, 64, or 80 pins and 32 Kbytes to 128 Kbytes of code flash memory
Group D: RL78/F14 products with 30, 32, 48, 64, or 80 pins and 48 Kbytes to 96 Kbytes of code flash memory
Group E: RL78/F14 products with 48, 64, or 80 pins and 128 Kbytes to 256 Kbytes of code flash memory or with 100 pins and 64 Kbytes to 256 Kbytes of code flash memory

Caution Most of the following descriptions in this chapter use the 100-pin products as an example.

4.2.1 Port 0

Port 0 is an I/O port with an output latch. Port 0 can be set to the input mode or output mode in 1-bit units using port mode register 0 (PM0). When the P00 to P03 pins are used as an input port, use of an on-chip pull-up resistor can be specified in 1-bit units by pull-up resistor option register 0 (PU0).

This port can also be used for timer I/O, real-time clock correction clock output, and external interrupt request input.

Reset signal generation sets this port to input mode.

Table 4-3. Settings of Registers When Using Port 0

Pin Name		PM0x	Alternate Function Setting Note 5	Remark
Name	I/O			
P00	Input	1	×	
	Output	0	(TO05 output = 0) Note 1, 3	
P01	Input	1	×	
	Output	0	(TO04 output = 0) Note 1, 3	
P02	Input	1	×	
	Output	0	(TO06 output = 0) Note 1, 3	
P03	Input	1	×	
	Output	0	(RTC1HZ output = 0) Note 2, 4	

Notes 1. When a pin sharing a timer output function of the timer array unit is to be used as a general-purpose port pin, the TOmn bit of the timer output register m (TOm) and the TOEmn bit of the timer output enable register m (TOEm) corresponding to the target unit and channel must have the same setting as in the initial state (m = 0, 1, n = 0 to 7).

2. When a pin sharing the output (1-Hz) function of the RTC1HZ pin is to be used as a general-purpose port pin, the RCLOE1 bit of the real-time clock control register 0 (RTCC0) must have the same setting as its initial value.

3. When a pin sharing a timer output function of the timer array unit is to be used as a general-purpose port pin, operation of the corresponding timer output must be stopped.

4. The RCLOE1 bit of the real-time clock control register 0 (RTCC0) must have the same setting as its initial value.

5. Functions in parentheses can be assigned via settings in the peripheral I/O redirection registers 1, 8 (PIOR1, PIOR8).

Remark ×: Don't care

PM0x: Port mode register 0

<R> For example, figures 4-1 to 4-4 show block diagrams of port 0 for 100-pin products.

Figure 4-1. Block Diagram of P00

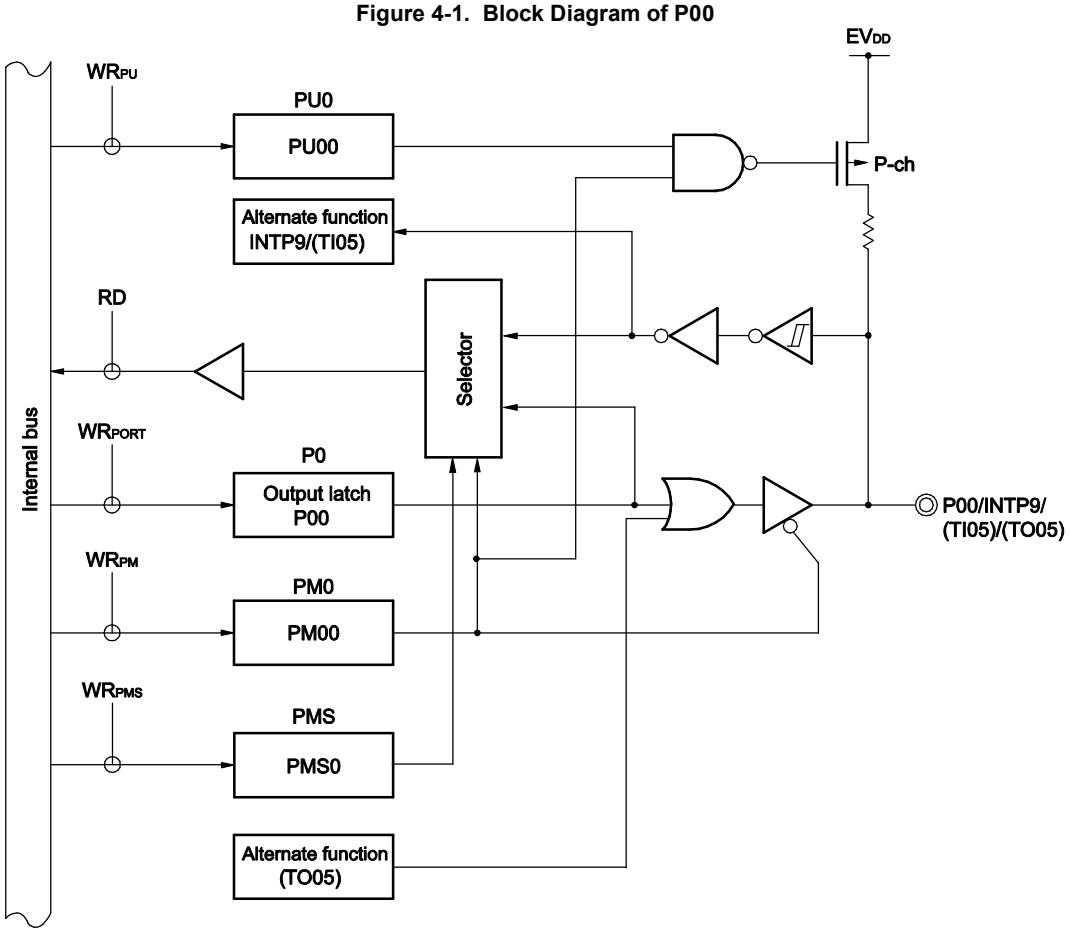

P0: Port register 0
PU0: Pull-up resistor option register 0
PM0: Port mode register 0
PMS: Port mode select register
RD: Read signal
WRxx: Write signal

Figure 4-2. Block Diagram of P01

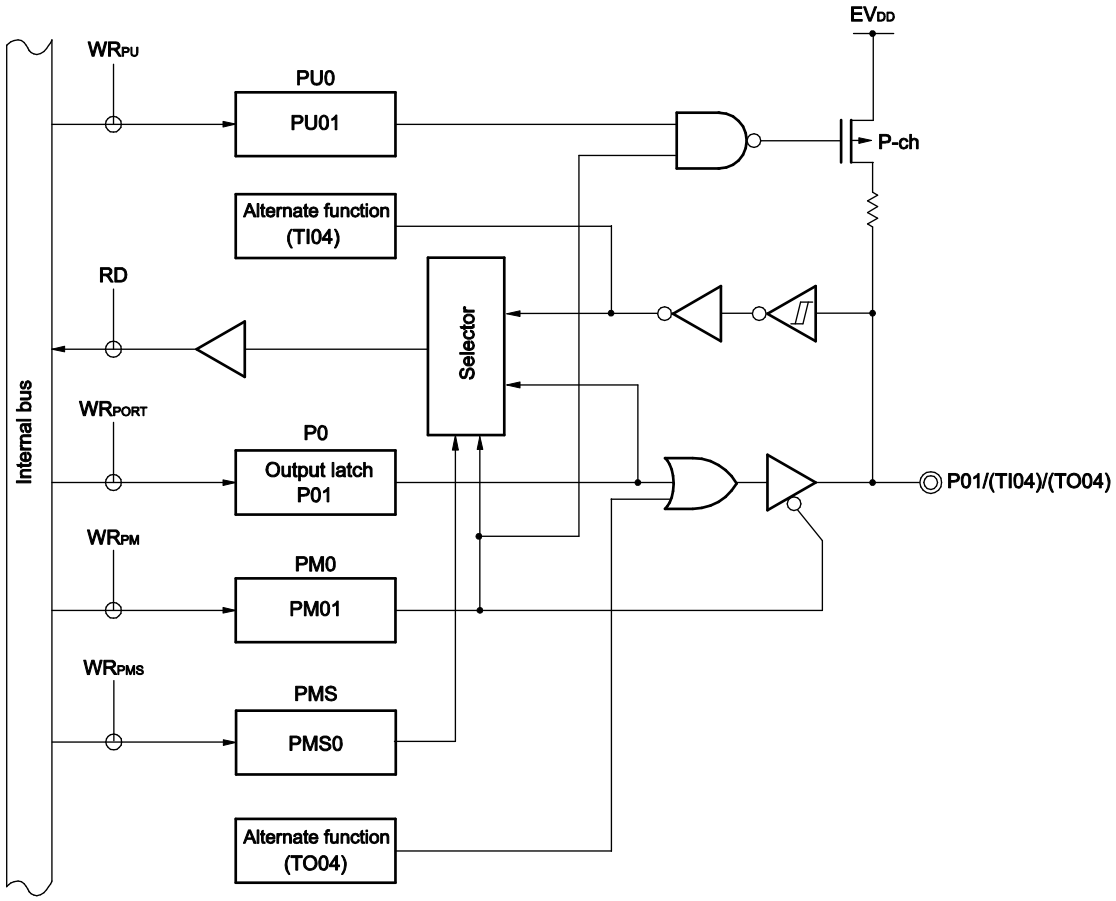

P0: Port register 0
PU0: Pull-up resistor option register 0
PM0: Port mode register 0
PMS: Port mode select register
RD: Read signal
WRxx: Write signal

Figure 4-3. Block Diagram of P02

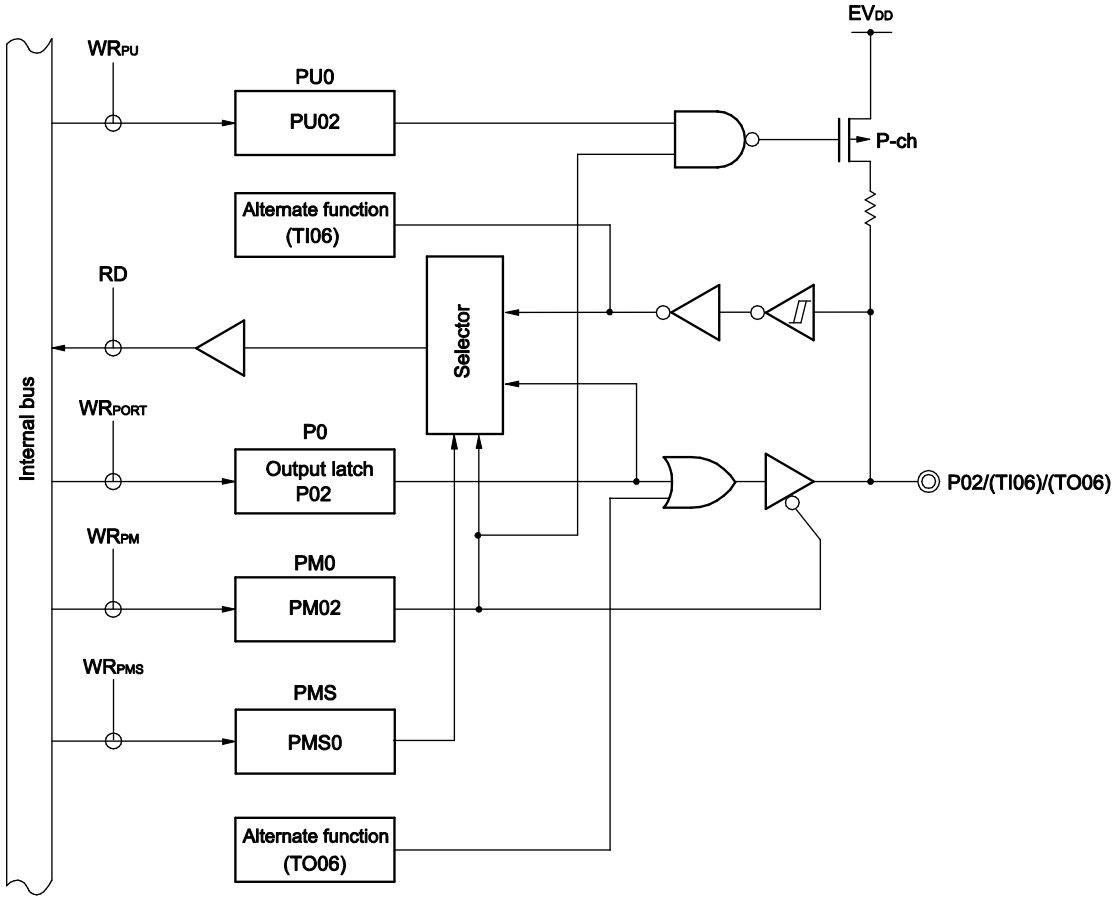

P0: Port register 0
PU0: Pull-up resistor option register 0
PM0: Port mode register 0
PMS: Port mode select register
RD: Read signal
WRxx: Write signal

Figure 4-4. Block Diagram of P03

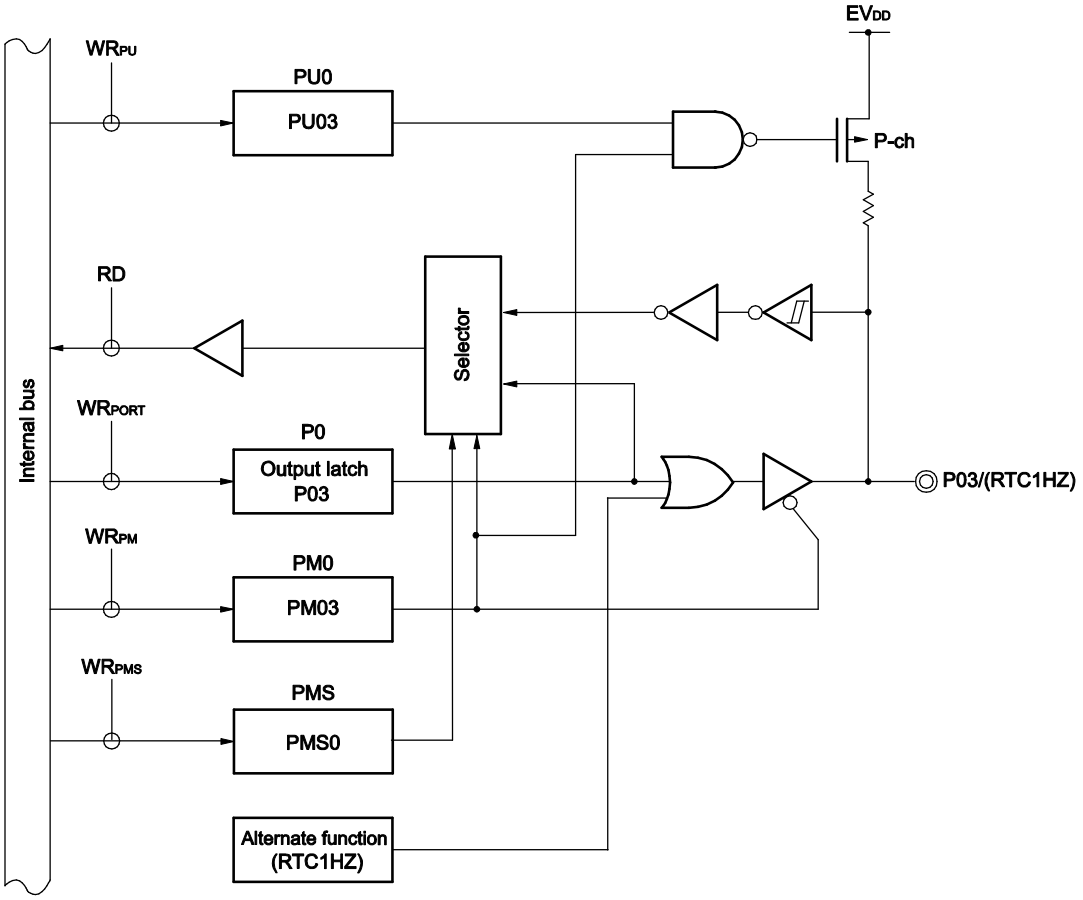

P0: Port register 0
PU0: Pull-up resistor option register 0
PM0: Port mode register 0
PMS: Port mode select register
RD: Read signal
WRxx: Write signal

4.2.2 Port 1

Port 1 is an I/O port with an output latch. Port 1 can be set to the input mode or output mode in 1-bit units using port mode register 1 (PM1). When the P10 to P17 pins are used as an input port, use of an on-chip pull-up resistor can be specified in 1-bit units by pull-up resistor option register 1 (PU1).

Input to the P10, P11, P13, P14, P16, and P17 pins can be specified through a normal input buffer or a TTL input buffer in 1-bit units using port input mode register 1 (PIM1).

Output from the P10 to P17 pins can be specified as N-ch open-drain output (EV_{DD} tolerance) in 1-bit units using port output mode register 1 (POM1).

Input to the P10, P11, P13, P14, P16, and P17 pins can be specified through an input buffer in 1-bit units using the port input threshold control register 1 (PITHL1).

This port can also be used for data I/O and clock I/O for serial interfaces (simplified IIC, CSI, and UART), serial data I/O for LIN, serial data I/O for CAN, real-time clock correction clock output, programming UART I/O, timer I/O, external interrupt request input, and SNOOZE status output.

Reset signal generation sets this port to input mode.

Table 4-4. Settings of Registers When Using Port 1 (1/3)

Pin name		PM1x	PIM1x	POM1x	PITHL1x	Alternate Function Setting Note 11	Remark
Name	I/O						
P10	Input	1	0	×	0	×	CMOS input (Schmitt1 input)
					1		CMOS input (Schmitt3 input)
			1	×	×	×	TTL input
	Output	0	×	0	×	$\overline{SCK10}$/SCL10 output = 1 Note 1	CMOS output
			×	1	×	TO13 output = 0 Note 2 TRJO0 output = 0 Note 3 LTXD1 output = 1 Note 8 CTXD0 output = 1 Note 9	N-ch O.D output
P11	Input	1	0	×	0	×	CMOS input (Schmitt1 input)
					1		CMOS input (Schmitt3 input)
			1	×	×	×	TTL input
	Output	0	×	0	×	SDA10 output = 1 Note4	CMOS output
			×	1	×	TO12 output = 0 Note2 (TRDIOB0 output = 0) Note5	N-ch O.D output
P12	Input	1	–	×	–	×	
	Output	0	–	0	–	TO11 output = 0 Note 2	CMOS output
			–	1	–	SO10/TxD1 output = 1 Note 4 SNZOUT3 output = 0 Note 7 (TRDIOD0 output = 0) Note 5	N-ch O.D output

(**Notes** and **Remark** are listed on the bottom of Table 4-4 Settings of Registers When Using Port 1 (3/3).)

Table 4-4. Settings of Registers When Using Port 1 (2/3)

Pin name		PM1x	PIM1x	POM1x	PITHL1x	Alternate Function Setting Note 11	Remark
Name	I/O						
P13	Input	1	0	×	0	×	CMOS input (Schmitt1 input)
					1		CMOS input (Schmitt3 input)
			1	×	×	×	TTL input
	Output	0	×	0	×	TRDIOA0 output = 0 Note 5	CMOS output
			×	1	×	SDA01 output = 1 Note 4 TO04 output = 0 Note 2 LTXD0 output = 1 Note 8	N-ch O.D output
P14	Input	1	0	×	0	×	CMOS input (Schmitt1 input)
					1		CMOS input (Schmitt3 input)
			1	×	×	×	TTL input
	Output	0	×	0	×	TRDIOC0 output = 0 Notes 5, 10	CMOS output
			×	1	×	$\overline{\text{SCK01}}$/SCL01 output = 1 Note 1 TO06 output = 0 Note 2	N-ch O.D output
P15	Input	1	–	×	–	×	
	Output	0	–	0	–	TRDIOA1 output = 0 Note 5	CMOS output
			–	1	–	TO05 output = 0 Note 2 SO00 output/TXD0 output = 1 Note 4 RTC1HZ output = 0 Note 6 (TRDIOA0 output = 0) Note 5	N-ch O.D output
P16	Input	1	0	×	0	×	CMOS input (Schmitt1 input)
					1		CMOS input (Schmitt3 input)
			1	×	×	×	TTL input
	Output	0	×	0	×	SDA00 output = 1 Note 4	CMOS output
			×	1	×	TRDIOC1 output = 0 Note 5 TO02 output = 0 Note 2	N-ch O.D output

(**Notes** and **Remark** are listed on the next page.)

Table 4-4. Settings of Registers When Using Port 1 (3/3)

Pin name		PM1x	PIM1x	POM1x	PITHL1x	Alternate Function Setting Note 7	Remark
Name	I/O						
P17	Input	1	0	×	0	×	CMOS input (Schmitt1 input)
					1		CMOS input (Schmitt3 input)
		1	1	×	×	×	TTL input
	Output	0	×	0	×	TRDIOB1 output = 0 Note 5	CMOS output
			×	1	×	$\overline{\text{SCK00}}$/SCL00 output = 1 Note 1 TO00 output = 0 Note 2	N-ch O.D output

Notes 1. When a pin sharing the serial array unit function is to be used as a general-purpose port pin, the CKOmn bit of the serial output register m (SOm), the SOEmn bit of the serial output enable register m (SOEm), and the SEmn bit of the serial channel enable status register m (SEm) corresponding to the target unit and channel must have the same setting as its initial value (m = 0, 1, n = 0, 1).

2. When a pin sharing a timer output function of the timer array unit is to be used as a general-purpose port pin, the TOmn bit of the timer output register m (TOm) and the TOEmn bit of the timer output enable register m (TOEm) corresponding to the target unit and channel must have the same setting as in the initial state (m = 0, 1, n = 0 to 7).

3. When a pin sharing the timer output function of the timer RJ is to be used as a general-purpose port pin, the bit 2 (TOENA) of the timer RJ I/O control register 0 (TRJIOC0) must have the same setting as its initial value.

4. When a pin sharing the serial array unit function is to be used as a general-purpose port pin, the SOmn bit of the serial output register m (SOm), the SOEmn bit of the serial output enable register m (SOEm), and the SEmn bit of the serial channel enable status register m (SEm) corresponding to the target unit and channel must have the same setting as its initial value (m = 0, 1, n = 0, 1).

5. When a pin sharing a timer RD function is to be used as a general-purpose port pin, the target bit for TRDIOij pin output control in the timer RD output master enable register 1 (TRDOER1) must have the same setting as its initial value (i = A, B, C, D, j = 0, 1)

6. The RCLOE1 bit of the real-time clock control register 0 (RTCC0) must have the same setting as its initial value.

7. When a pin sharing the SNOOZE status output function is to be used as a general-purpose port pin, the OUTEN0 to OUTEN7 bits of the SNOOZE status output control registers 0, 1, 2, 3 (PSNZCNT0, 1, 2, 3) must have the same setting as its initial value.

8. When a pin sharing the serial data output function of the LIN is to be used as a general-purpose port pin, operation of the corresponding LIN must be stopped.

9. When a pin sharing the serial data output function of the CAN is to be used as a general-purpose port pin, operation of the corresponding CAN must be stopped.

10. When the SNOOZE status output is in use, output from TRDIOC0 is stopped.

11. Functions in parentheses can be assigned via settings in the peripheral I/O redirection register 7 (PIOR7).

Remark ×: Don't care
PM1x: Port mode register 1
PIM1x: Port input mode register 1
POM1x: Port output mode register 1
<R> PITHL1x: Port input threshold control register 1

Figures 4-5 to 4-12 show block diagrams of port 1 for 100-pin products.

Figure 4-5. Block Diagram of P10

<R>

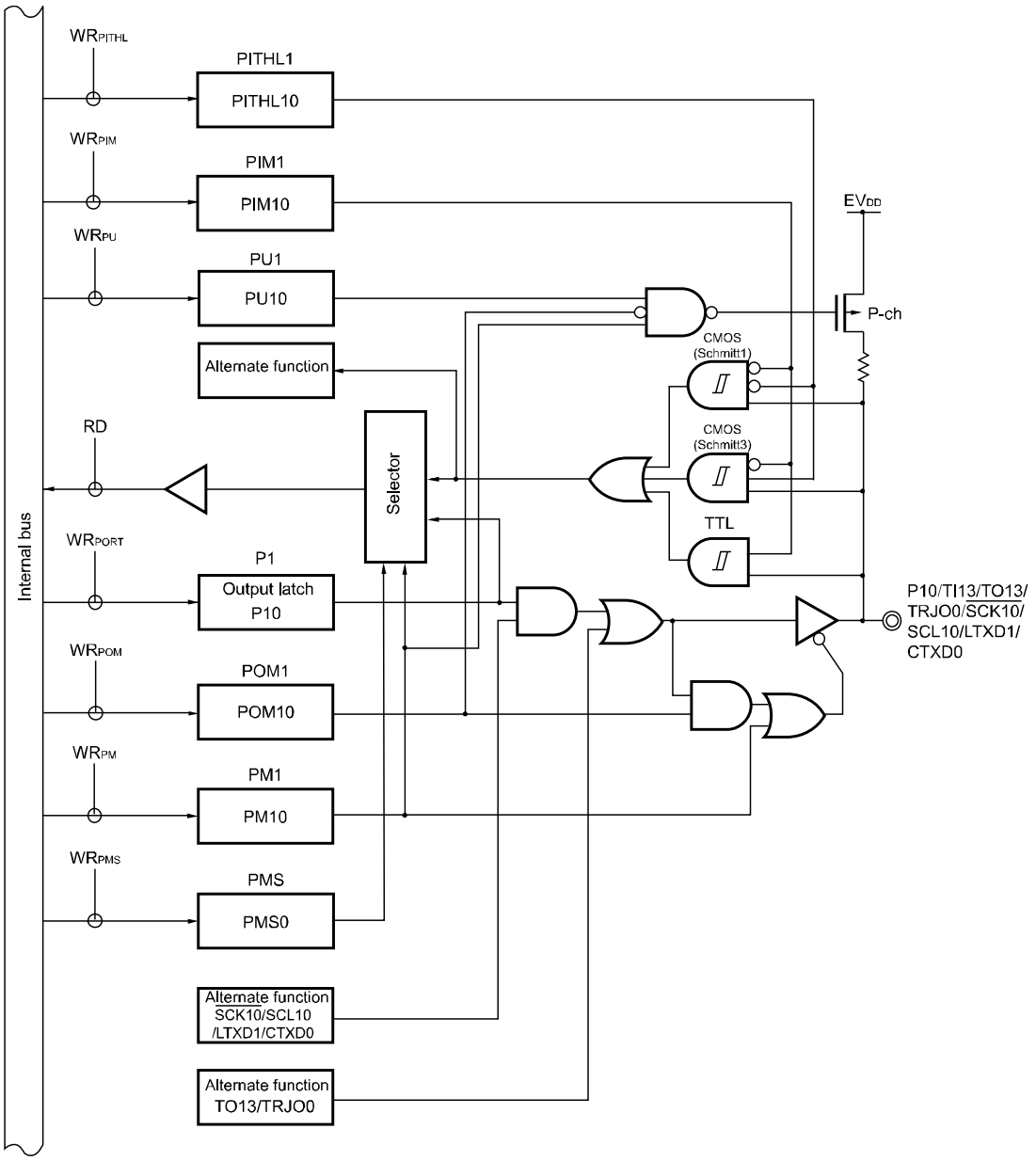

P1: Port register 1
PU1: Pull-up resistor option register 1
PM1: Port mode register 1
PIM1: Port input mode register 1
POM1: Port output mode register 1
PMS: Port mode select register
PITHL1: Port input threshold control register 1
RD: Read signal
WRxx: Write signal

Figure 4-6. Block Diagram of P11

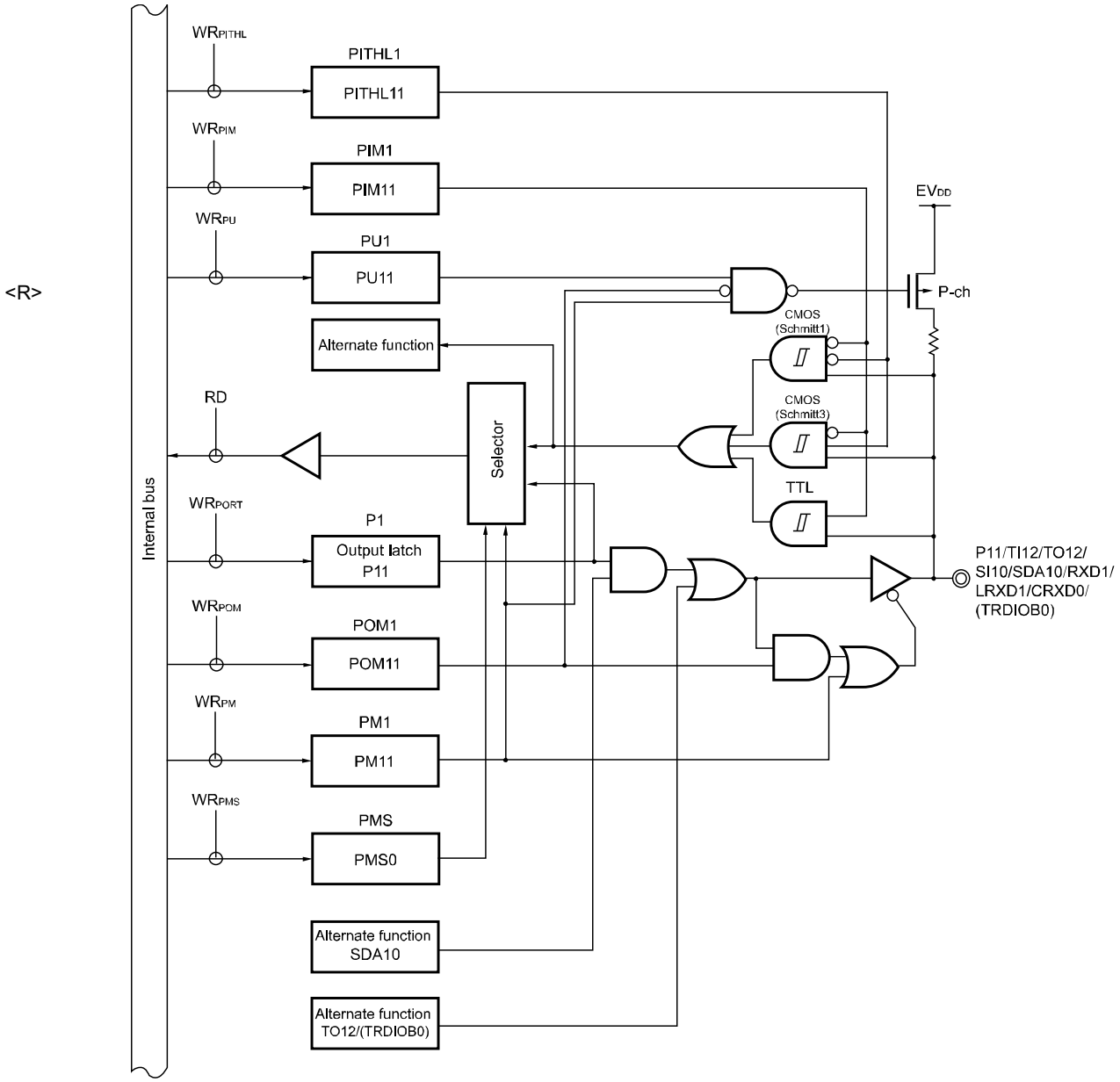

P1: Port register 1
PU1: Pull-up resistor option register 1
PM1: Port mode register 1
PIM1: Port input mode register 1
POM1: Port output mode register 1
PMS: Port mode select register
PITHL1: Port input threshold control register 1
RD: Read signal
WRxx: Write signal

Figure 4-7. Block Diagram of P12

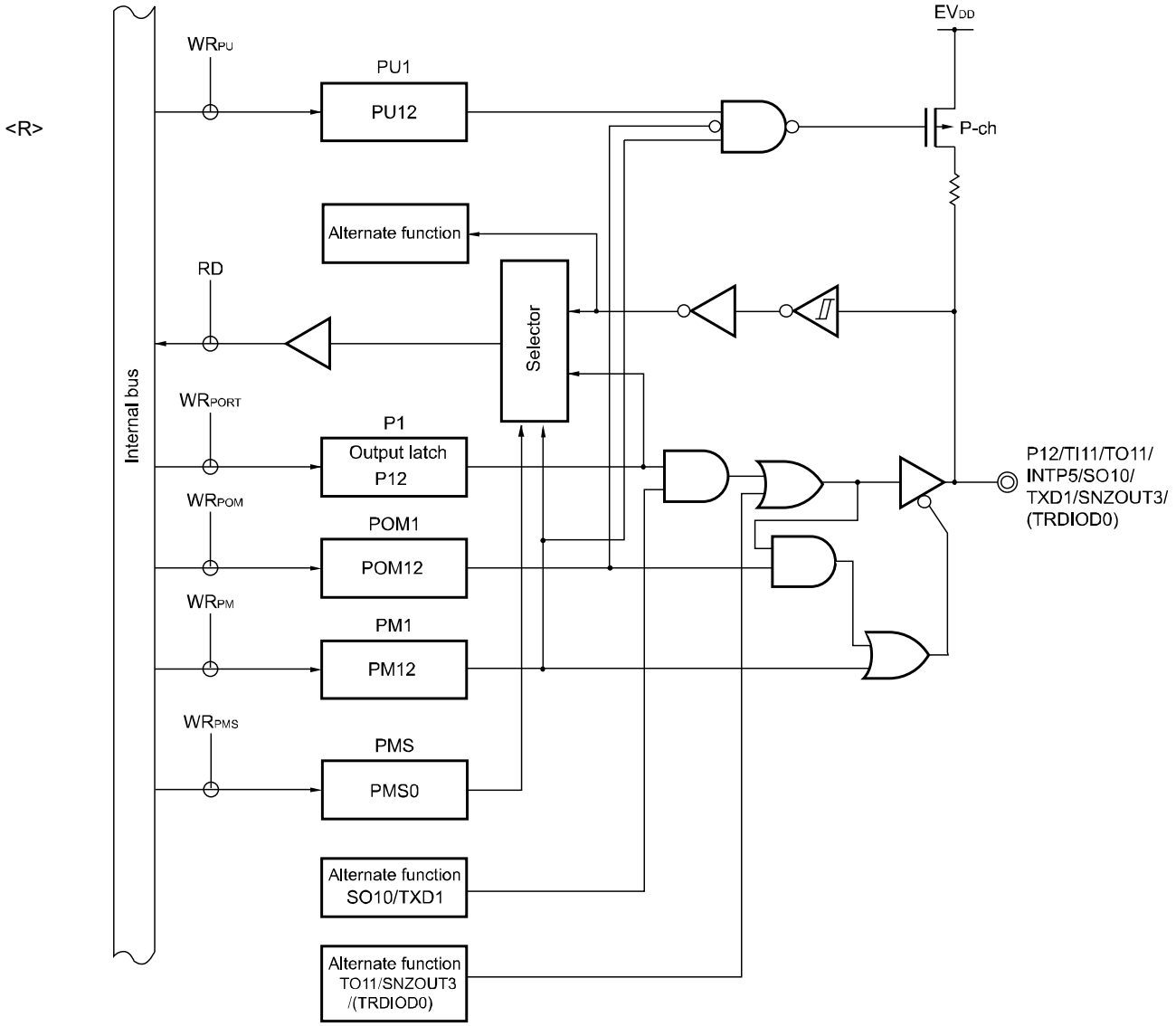

P1: Port register 1
PU1: Pull-up resistor option register 1
PM1: Port mode register 1
POM1: Port output mode register 1
PMS: Port mode select register
RD: Read signal
WRxx: Write signal

Figure 4-8. Block Diagram of P13

<R>

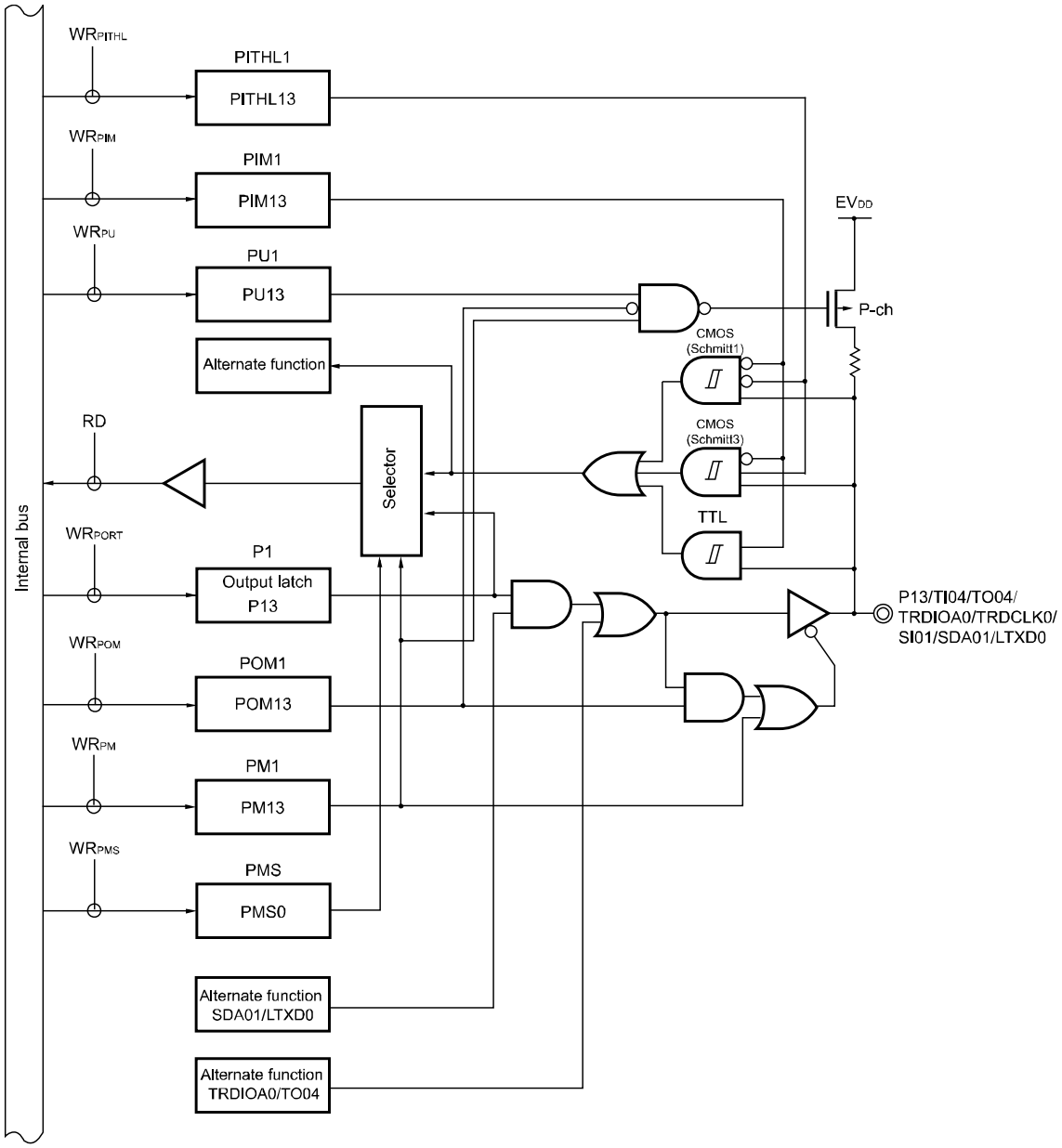

P1: Port register 1
PU1: Pull-up resistor option register 1
PM1: Port mode register 1
PIM1: Port input mode register 1
POM1: Port output mode register 1
PMS: Port mode select register
PITHL1: Port input threshold control register 1
RD: Read signal
WRxx: Write signal

Figure 4-9. Block Diagram of P14

<R>

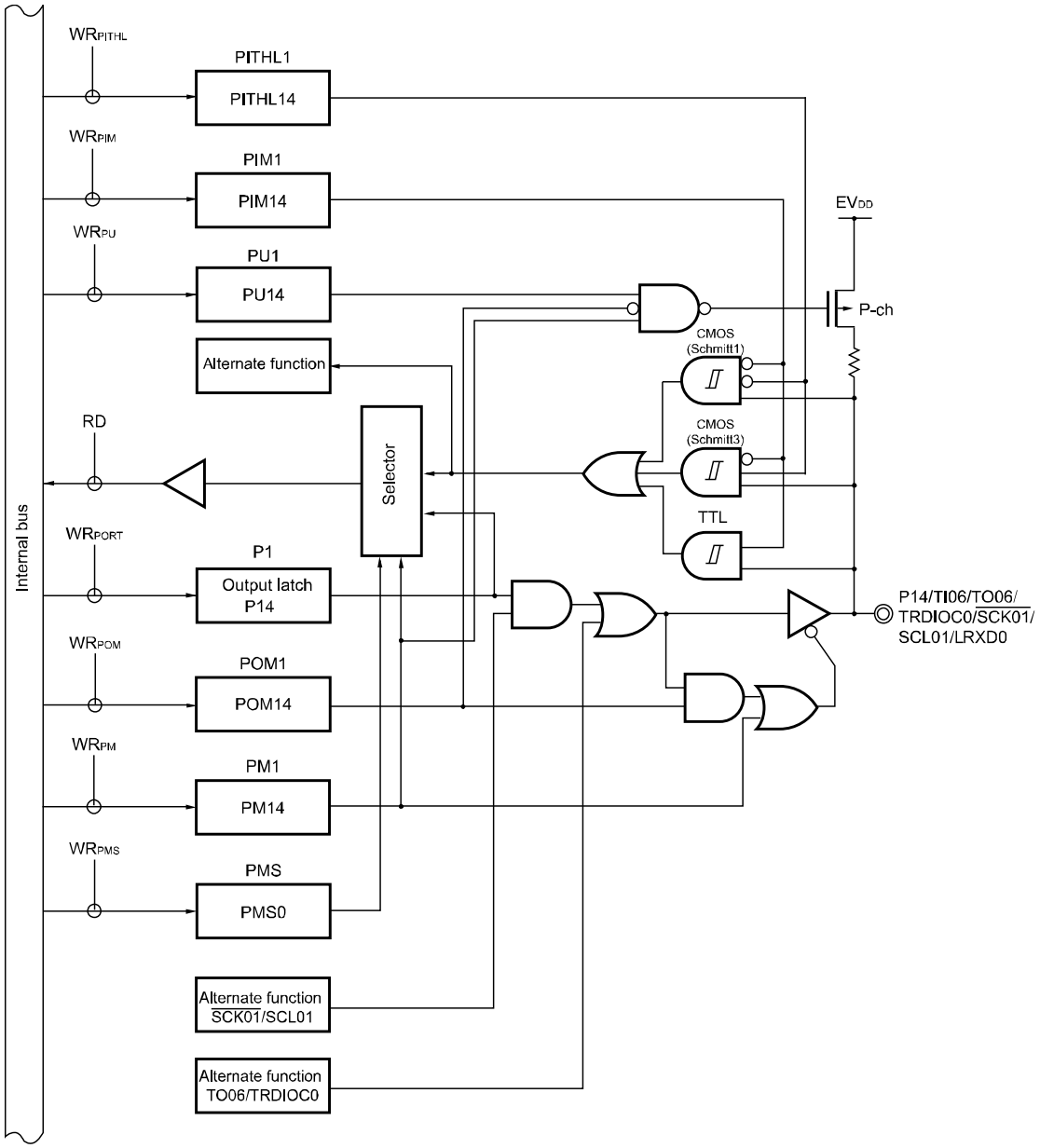

P1: Port register 1
PU1: Pull-up resistor option register 1
PM1: Port mode register 1
PIM1: Port input mode register 1
POM1: Port output mode register 1
PMS: Port mode select register
PITHL1: Port input threshold control register 1
RD: Read signal
WRxx: Write signal

Figure 4-10. Block Diagram of P15

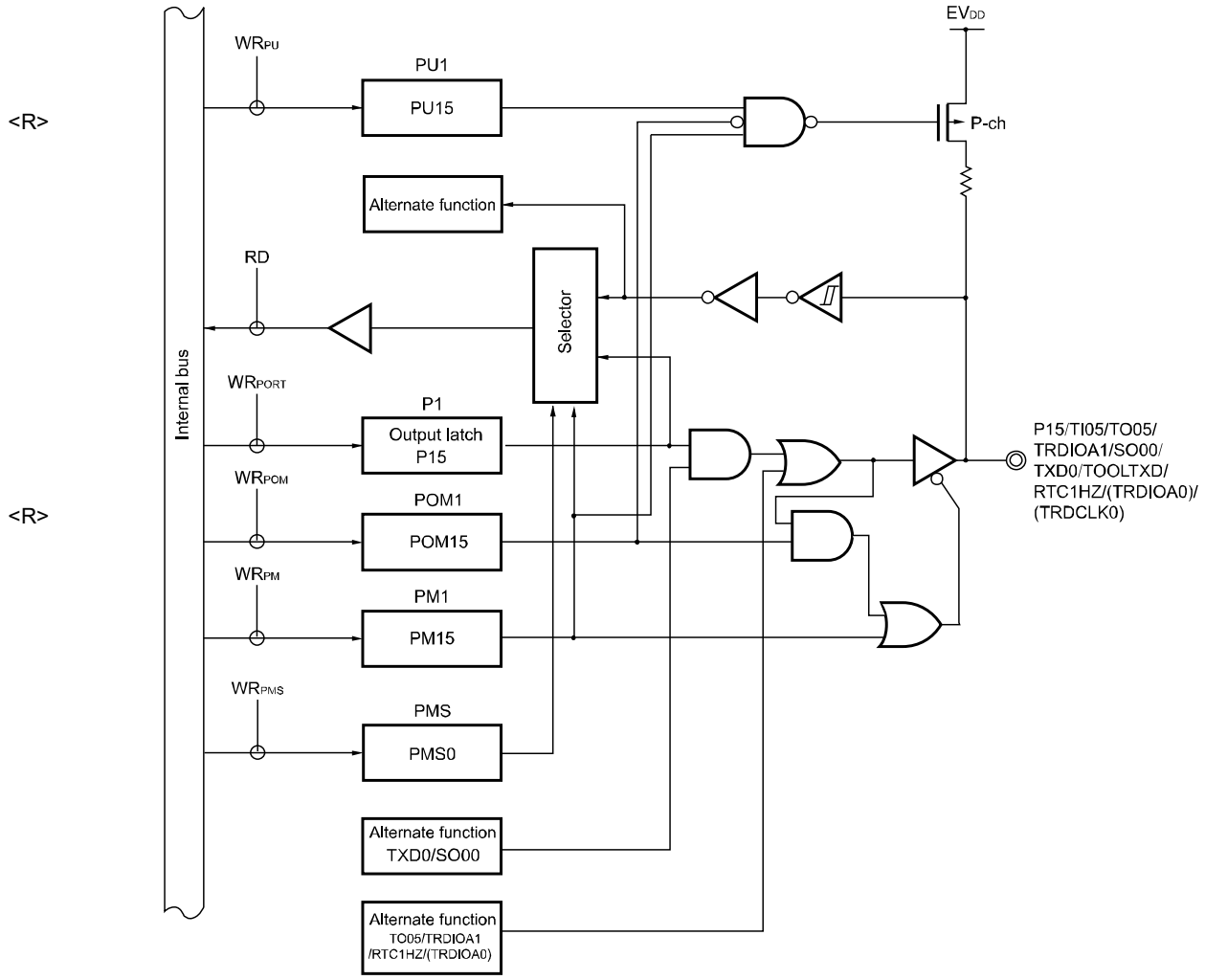

P1: Port register 1
PU1: Pull-up resistor option register 1
PM1: Port mode register 1
POM1: Port output mode register 1
PMS: Port mode select register
RD: Read signal
WRxx: Write signal

Figure 4-11. Block Diagram of P16

<R>

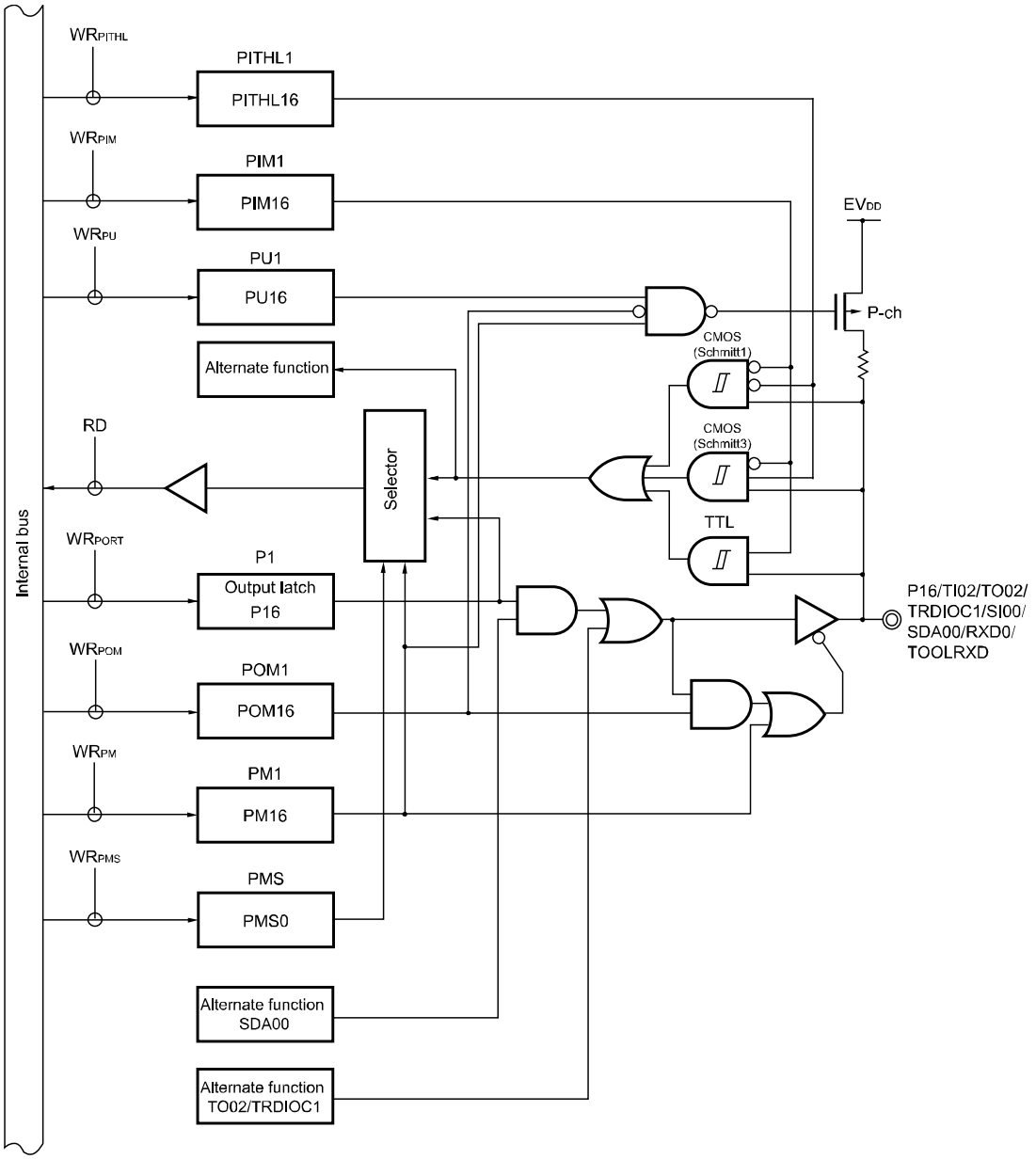

P1: Port register 1
PU1: Pull-up resistor option register 1
PM1: Port mode register 1
PIM1: Port input mode register 1
POM1: Port output mode register 1
PMS: Port mode select register
PITHL1: Port input threshold control register 1
RD: Read signal
WRxx: Write signal

Figure 4-12. Block Diagram of P17

<R>

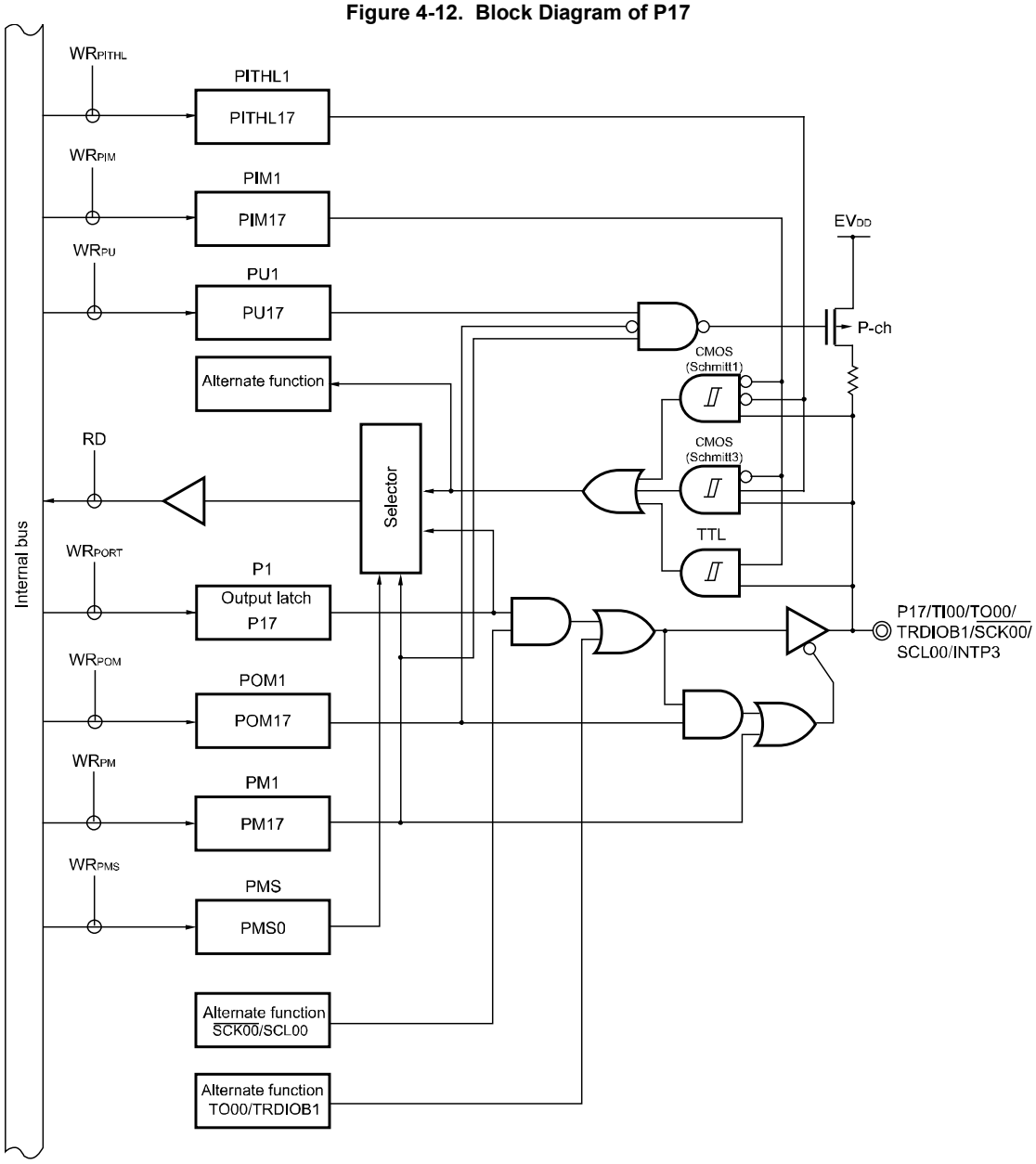

P1: Port register 1
PU1: Pull-up resistor option register 1
PM1: Port mode register 1
PIM1: Port input mode register 1
POM1: Port output mode register 1
PMS: Port mode select register
PITHL1: Port input threshold control register 1
RD: Read signal
WRxx: Write signal

4.2.3 Port 3

Port 3 is an I/O port with an output latch. Port 3 can be set to the input mode or output mode in 1-bit units using port mode register 3 (PM3). When the P30 to P32 pins are used as an input port, use of an on-chip pull-up resistor can be specified in 1-bit units by pull-up resistor option register 3 (PU3).

Input to the P30 pin can be specified through a normal input buffer or a TTL input buffer in 1-bit units using port input mode register 3 (PIM3). For the P30 pin input, the threshold of the input buffer can be specified in 1-bit units using the port input threshold control register 3 (PITHL3).

This port can also be used for external interrupt request input, timer I/O, serial interface slave select input, SNOOZE status output, and STOP status output.

P33 and P34 can also be used for A/D converter analog input and reference voltage input (+side and – side).

To use P33/ANI0 and P34/ANI1 as digital input pins, set them in the digital I/O mode by using the A/D port configuration register (ADPC) and in the input mode by using the PM3 register. Use these pins starting from the upper bit.

To use P33/ANI0 and P34/ANI1 as digital output pins, set them in the digital I/O mode by using the A/D port configuration register (ADPC) and in the output mode by using the PM3 register. Use these pins starting from the upper bit.

To use P33/ANI0 and P34/ANI1 as analog I/O pins, set them in the analog I/O mode by using the A/D port configuration register (ADPC) and in the input mode by using the PM3 register. Use these pins starting from the lower bit.

Reset signal generation sets P30 to P32 to input mode and P33/ANI0 and P34/ANI1 to analog input mode.

Table 4-5. Settings of Registers When Using Port 3 (P30 to P32) (1)

Pin name		PM3x	PIM3x	PITHL3x	Alternate Function Setting Note 5	Remark
Name	I/O					
P30	Input	1	0	0	×	CMOS input (Schmitt1 input)
				1		CMOS input (Schmitt3 input)
			1	×	×	TTL input
	Output	0	×	×	TRDIOD1 output = 0 Note 1 TO01 output = 0 Note 2 SNZOUT0 output = 0 Note 3	
P31	Input	1	–	–	×	
	Output	0	–	–	TO14 output = 0 Note 2 STOPST output = 0 Note 4	
P32	Input	1	–	–	×	
	Output	0	–	–	TO16 output = 0 Note 2	

Notes 1. When a pin sharing a timer RD function is to be used as a general-purpose port pin, the target bit for TRDIOij pin output control in the timer RD output master enable register 1 (TRDOER1) must have the same setting as its initial value (i = A, B, C, D, j = 0, 1)

2. When a pin sharing a timer output function of the timer array unit is to be used as a general-purpose port pin, the TOmn bit of the timer output register m (TOm) and the TOEmn bit of the timer output enable register m (TOEm) corresponding to the target unit and channel must have the same setting as in the initial state (m = 0, 1, n = 0 to 7).

3. When a pin sharing the SNOOZE status output function is to be used as a general-purpose port pin, the OUTEN0 to OUTEN7 bits of the SNOOZE status output control registers 0, 1, 2, 3 (PSNZCNT0, 1, 2, 3) must have the same setting as its initial value.

4. When a pin sharing the STOP status output function is to be used as a general-purpose port pin, the STPOEN bit of the STOP status output control register (STPSTC) must have the same setting as its initial value.

5. Functions in parentheses can be assigned via settings in the peripheral I/O redirection registers 0 to 8 (PIOR0 to PIOR8).

Remark ×: Don't care
PM3x: Port mode register 3
PIM3x: Port input mode register 3
PITHL3x: Port input threshold control register 3

Table 4-6. Settings of Registers When Using Port 3 (P33 and P34) (2)

Pin Name		PM3x	ADPC	Alternate Function Setting	Remark
Name	I/O				
P3n	Input	1	01 to n-2H	—	To use P3n as a port, use these pins from the upper bit.
	Output	0	01 to n-2H		

Remarks 1. PM3x: Port mode register 3
ADPC: A/D port configuration register
2. n = 3 or 4

Table 4-7. Setting Functions of P33/ANI0 and P34/ANI1 Pins

ADPC Register	PM3 Register	ADS Register	P33/ANI0 and P34/ANI1 Pins
Digital I/O selection	Input mode	—	Digital input
	Output mode	—	Digital output
Analog input selection	Input mode	Selects ANI.	Analog input (to be converted)
		Does not select ANI.	Analog input (not to be converted)
	Output mode	Selects ANI.	Setting prohibited
		Does not select ANI.	

Reset signal generation sets P33/ANI0 and P34/ANI1 to analog input mode.

Figures 4-13 to 4-16 show block diagrams of port 3 for 100-pin products.

Figure 4-13. Block Diagram of P30

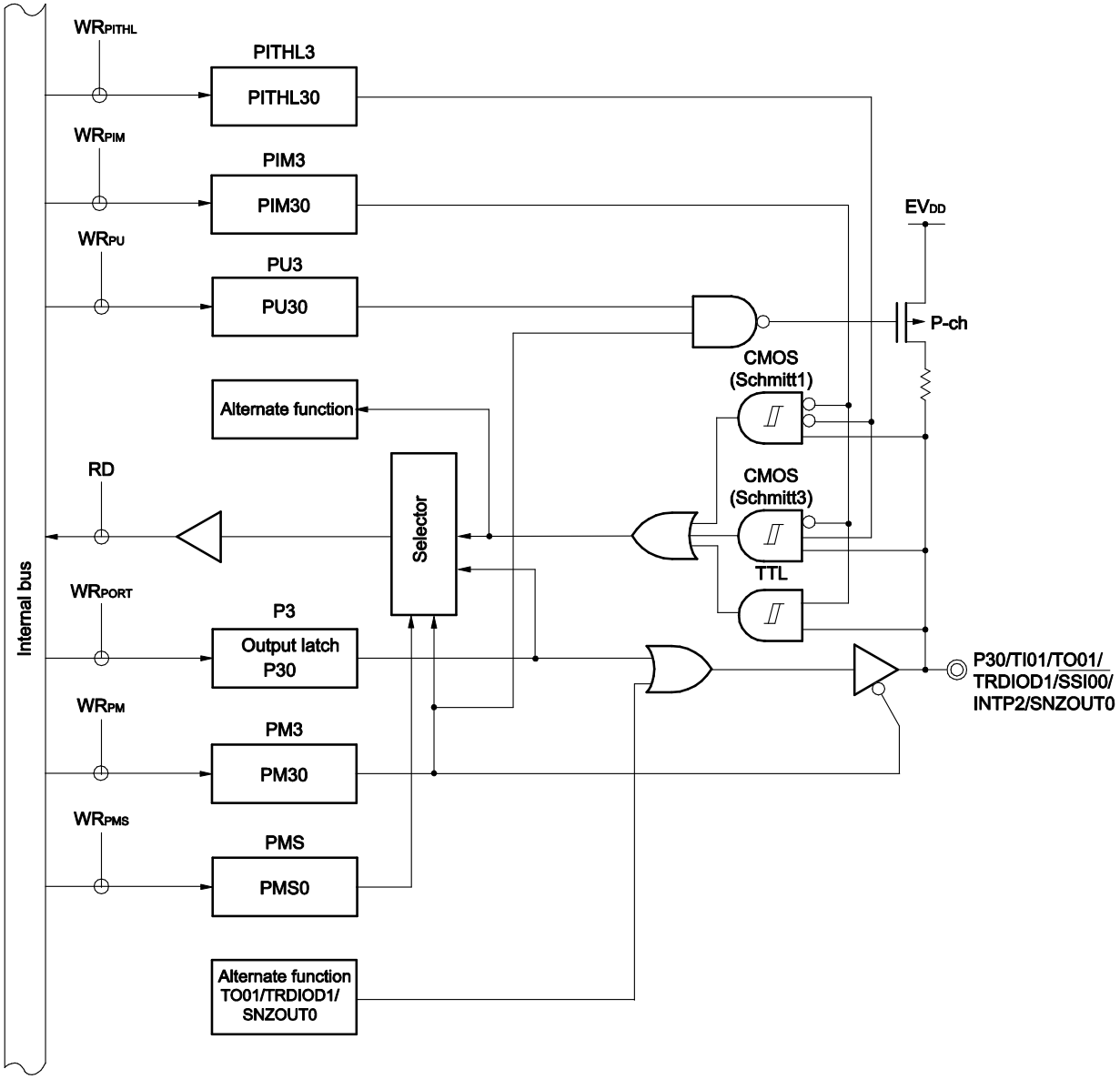

P3: Port register 3
PU3: Pull-up resistor option register 3
PM3: Port mode register 3
PIM3: Port input mode register 3
PMS: Port mode select register
PITHL3: Port input threshold control register 3
RD: Read signal
WRxx: Write signal

Figure 4-14. Block Diagram of P31

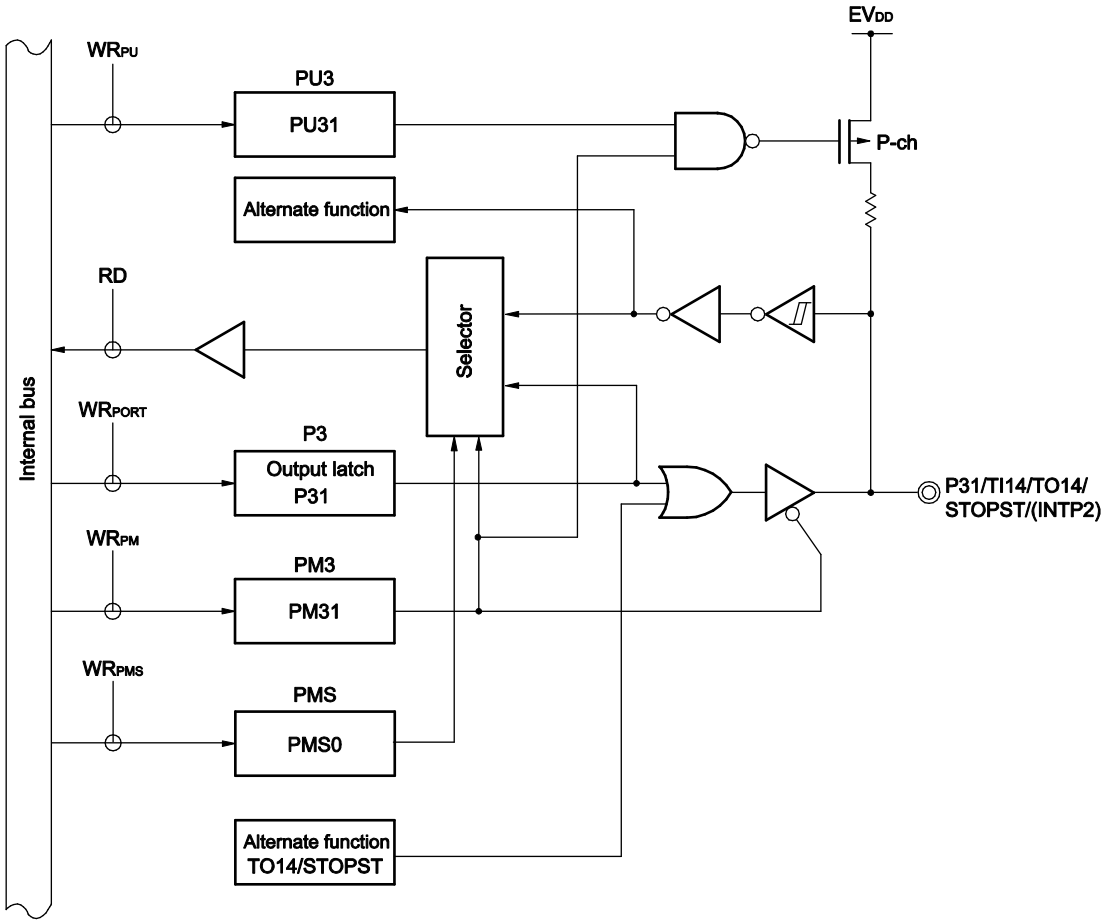

P3: Port register 3
PU3: Pull-up resistor option register 3
PM3: Port mode register 3
PMS: Port mode select register
RD: Read signal
WRxx: Write signal

Figure 4-15. Block Diagram of P32

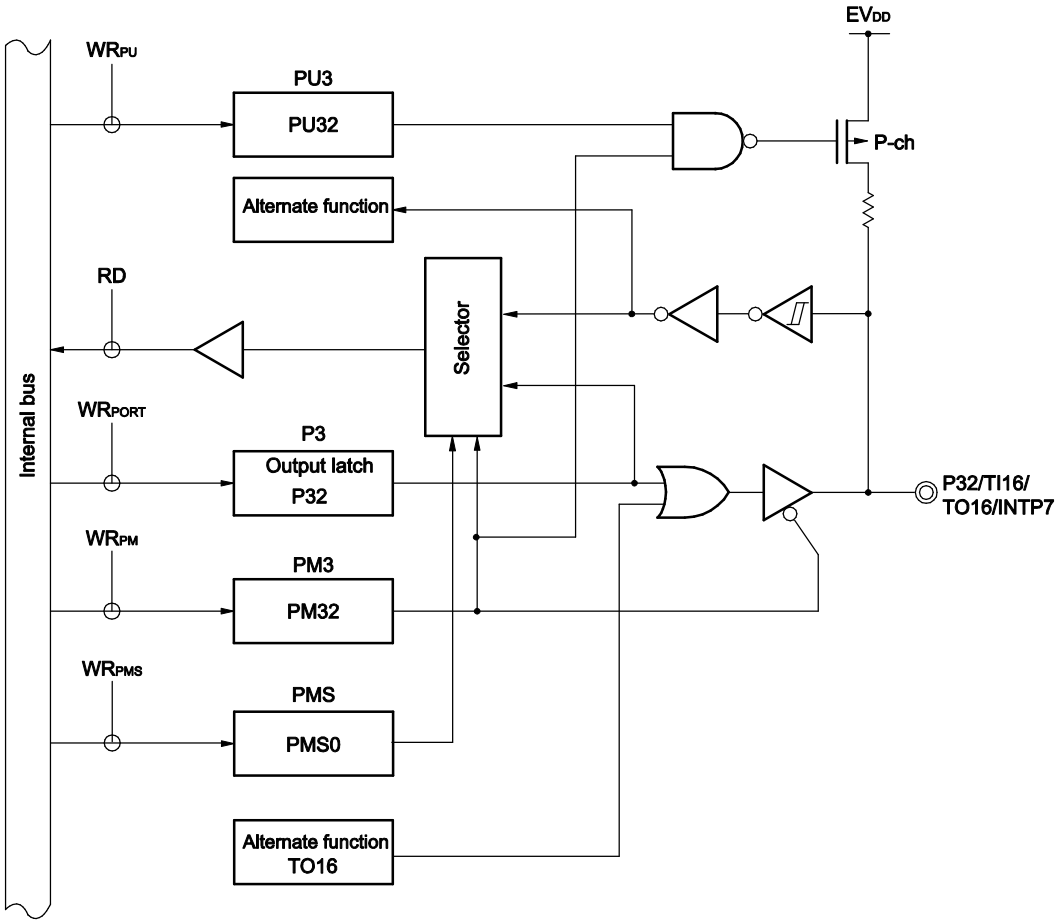

P3: Port register 3
PU3: Pull-up resistor option register 3
PM3: Port mode register 3
PMS: Port mode select register
RD: Read signal
WRxx: Write signal

Figure 4-16. Block Diagram of P33 and P34

<R>

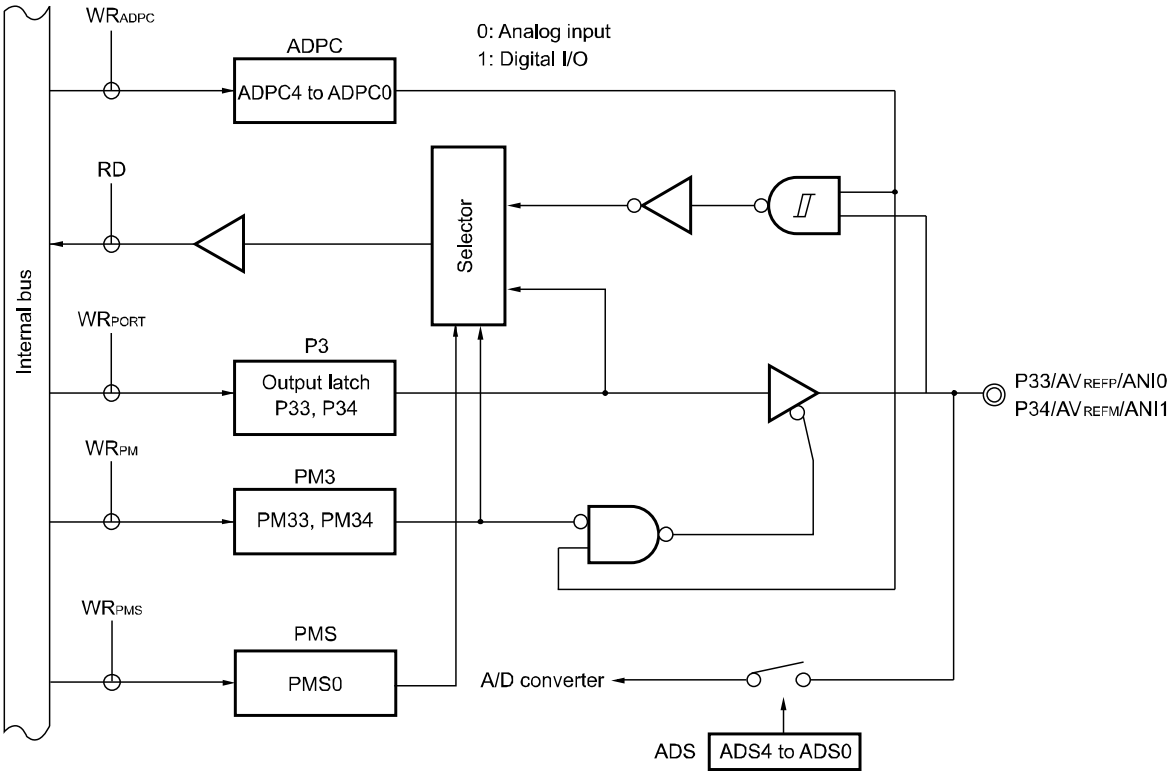

P3: Port register 3
PM3: Port mode register 3
PMS: Port mode select register
ADPC: A/D Port configuration register
ADS: Analog input channel specification register
RD: Read signal
WRxx: Write signal

4.2.4 Port 4

Port 4 is an I/O port with an output latch. Port 4 can be set to the input mode or output mode in 1-bit units using port mode register 4 (PM4). When the P40 to P47 pins are used as an input port, use of an on-chip pull-up resistor can be specified in 1-bit units by pull-up resistor option register 4 (PU4).

For the P43 pin input, the threshold of the input buffer can be specified in 1-bit units using the port input threshold control register 4 (PITHL4).

This port can also be used for external interrupt request input, timer I/O, comparator output, SNOOZE status output, LIN serial data I/O, and data I/O for a flash memory programmer/debugger.

Reset signal generation sets this port to input mode.

Table 4-8. Settings of Registers When Using Port 4

Pin name		PM4x	PITHL4x	Alternate Function Setting Note 6	Remark
Name	I/O				
P40	Input	1	–	×	
	Output	0	–	×	
P41	Input	1	–	×	
	Output	0	–	TRJIO0 output = 0 Note 1 TO10 output = 0 Note 2 VCOUT0 output = 0 Note 3 SNZOUT2 output = 0 Note 4	
P42	Input	1	–	×	
	Output	0	–	(LTXD0 = 1) Note 5	
P43	Input	1	0	×	CMOS input (Schmitt1 input)
			1	×	CMOS input (Schmitt3 input)
	Output	0	×	×	
P44	Input	1	–	×	
	Output	0	–	(TO07 output = 0) Note 2	
P45	Input	1	–	×	
	Output	0	–	(TO10 output = 0) Note 2	
P46	Input	1	–	×	
	Output	0	–	(TO12 output = 0) Note 2	
P47	Input	1	–	×	
	Output	0	–	×	

Notes 1. When a pin sharing a timer input/output function of the timer RJ is to be used as a general-purpose port pin, the TMOD2 to TMOD0 bits of the timer RJ mode register 0 (TRJMR0) must have the same setting as their initial value or have a setting other than 001B.

2. When a pin sharing a timer output function of the timer array unit is to be used as a general-purpose port pin, the TOmn bit of the timer output register m (TOm) and the TOEmn bit of the timer output enable register m (TOEm) corresponding to the target unit and channel must have the same setting as in the initial state (m = 0, 1, n = 0 to 7).

3. When a pin sharing the comparator output function is to be used as a general-purpose port pin, the COE bit of the comparator control register (CMPCTL) must have the same setting as its initial value.

4. When a pin sharing the SNOOZE status output function is to be used as a general-purpose port pin, the OUTEN0 to OUTEN7 bits of the SNOOZE status output control registers 0, 1, 2, 3 (PSNZCNT0, 1, 2, 3) must have the same setting as its initial value.

5. When a pin sharing the serial data output function of the LIN is to be used as a general-purpose port pin, operation of the corresponding LIN must be stopped.
6. Functions in parentheses can be assigned via settings in the peripheral I/O redirection registers 1, 3, 4 (PIOR1, PIOR3, PIOR4).

Remark ×: Don't care
PM4x: Port mode register 4
PITHL4x: Port input threshold control register 4

Figures 4-17 to 4-24 show block diagrams of port 4 for 100-pin products.

Figure 4-17. Block Diagram of P40

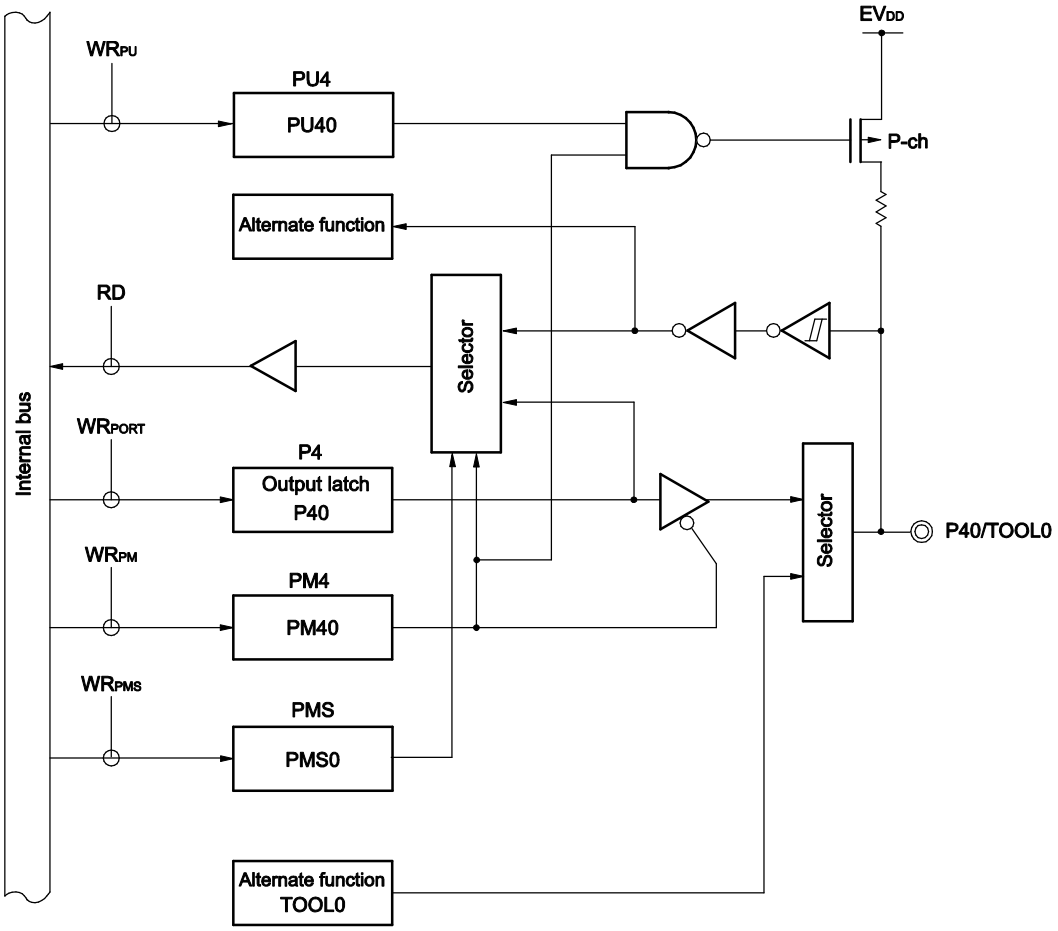

P4: Port register 4
PU4: Pull-up resistor option register 4
PM4: Port mode register 4
PMS: Port mode select register
RD: Read signal
WRxx: Write signal

Figure 4-18. Block Diagram of P41

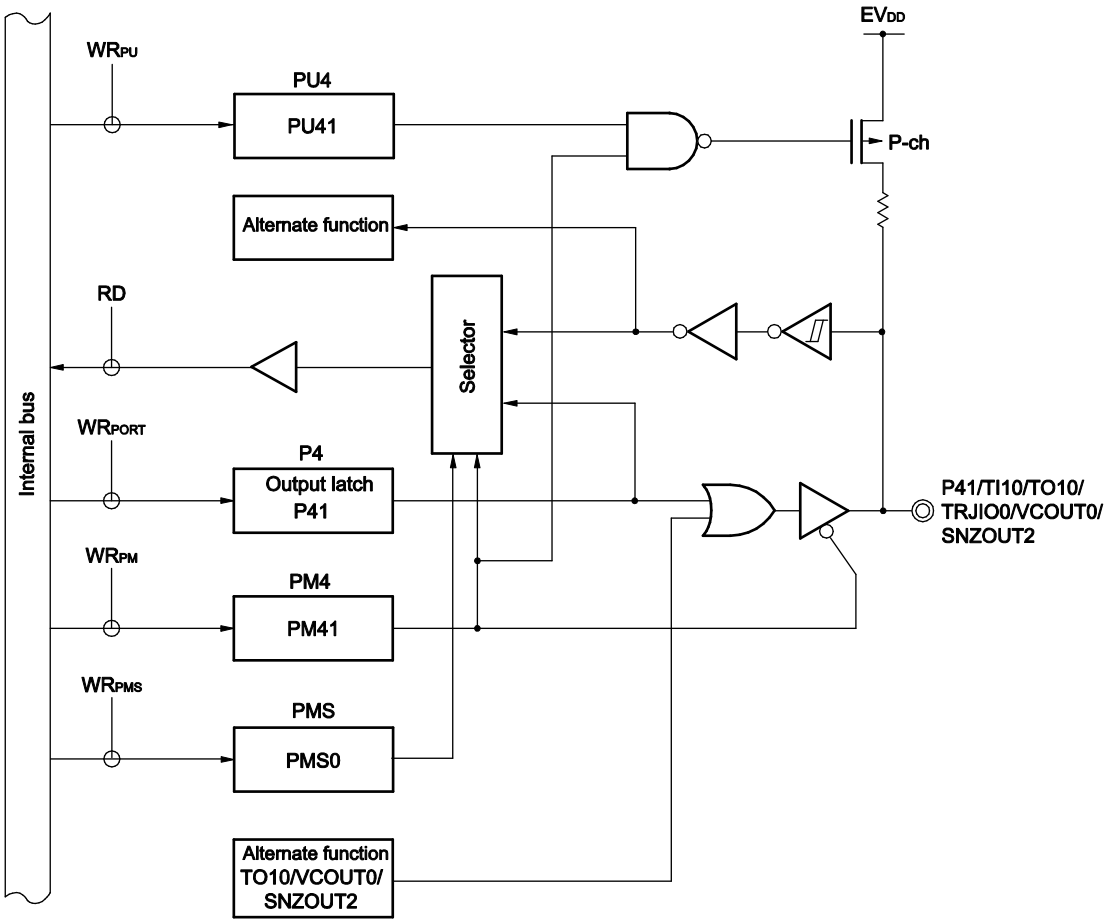

P4: Port register 4
PU4: Pull-up resistor option register 4
PM4: Port mode register 4
PMS: Port mode select register
RD: Read signal
WRxx: Write signal

Figure 4-19. Block Diagram of P42

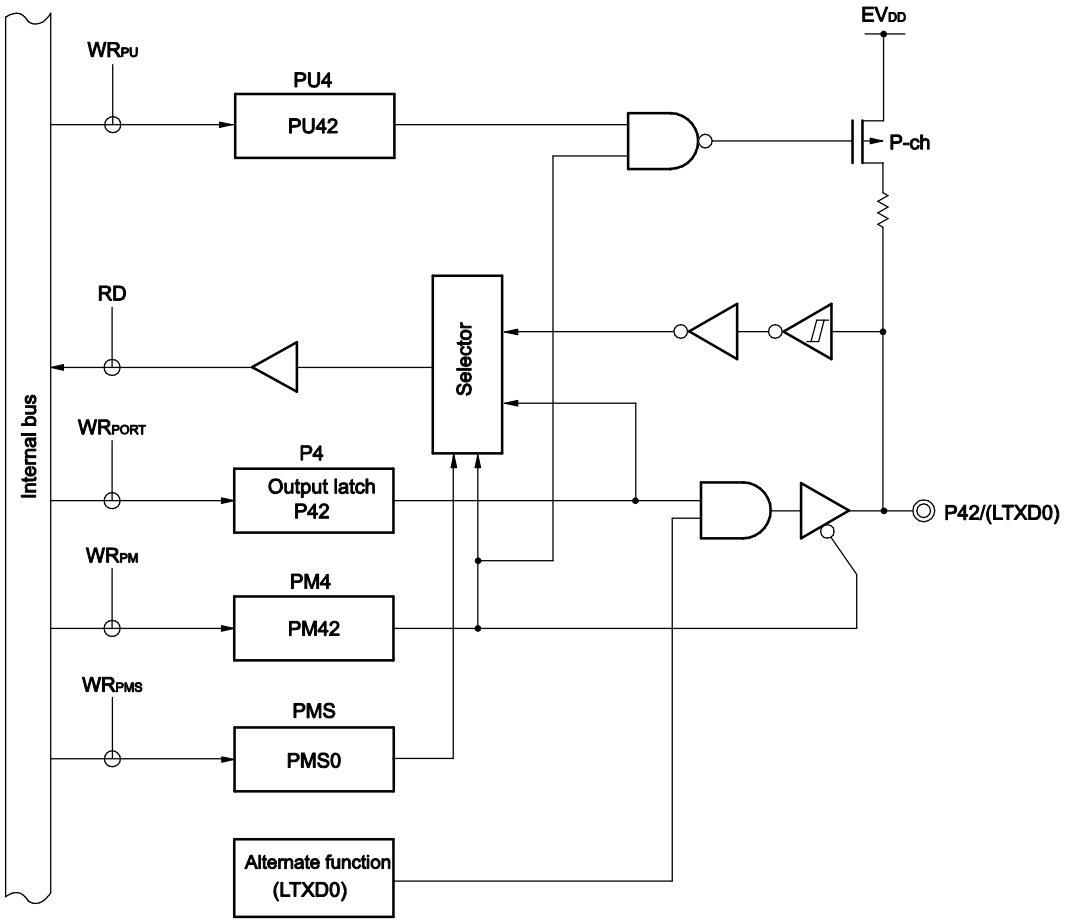

P4: Port register 4
PU4: Pull-up resistor option register 4
PM4: Port mode register 4
PMS: Port mode select register
RD: Read signal
WRxx: Write signal

Figure 4-20. Block Diagram of P43

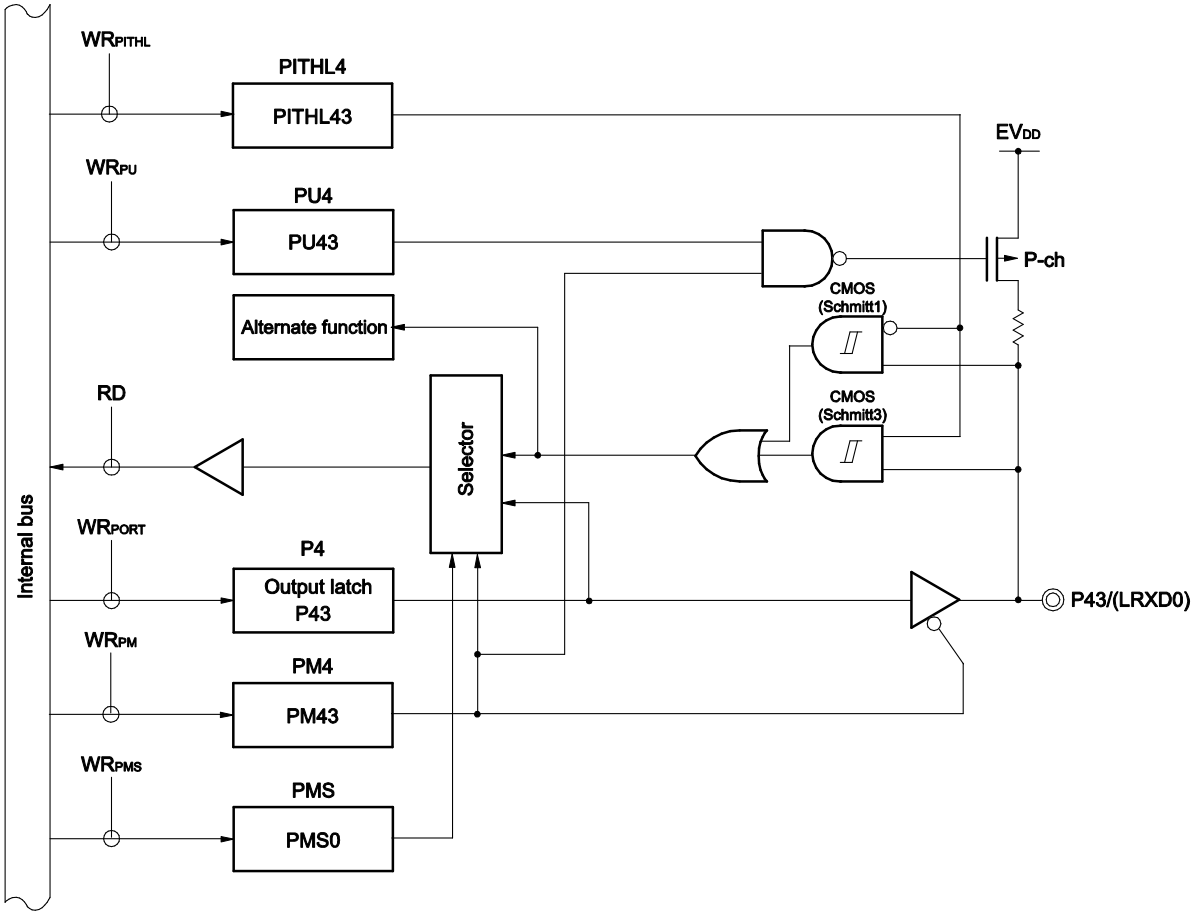

P4: Port register 4
PU4: Pull-up resistor option register 4
PM4: Port mode register 4
PMS: Port mode select register
PITHL4: Port input threshold control register 4
RD: Read signal
WRxx: Write signal

Figure 4-21. Block Diagram of P44

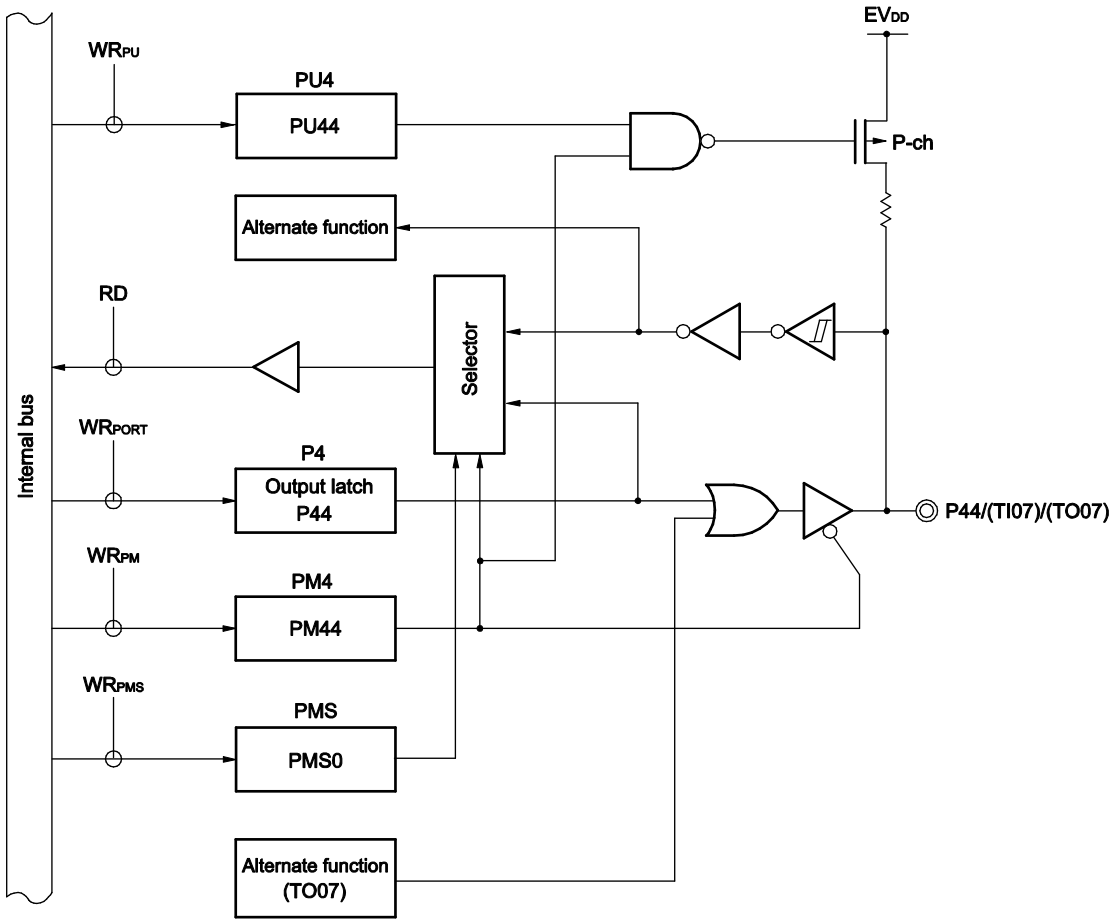

P4: Port register 4
PU4: Pull-up resistor option register 4
PM4: Port mode register 4
PMS: Port mode select register
RD: Read signal
WRxx: Write signal

Figure 4-22. Block Diagram of P45

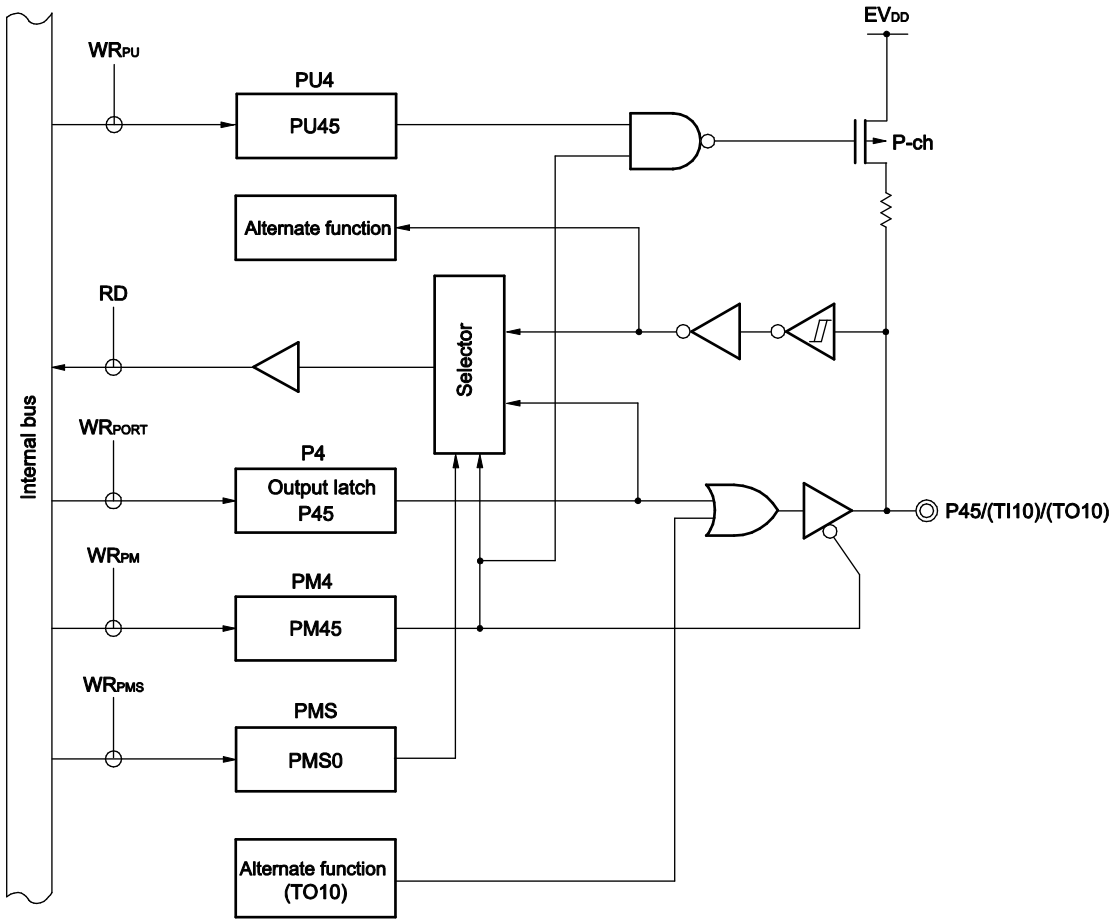

P4: Port register 4
PU4: Pull-up resistor option register 4
PM4: Port mode register 4
PMS: Port mode select register
RD: Read signal
WRxx: Write signal

Figure 4-23. Block Diagram of P46

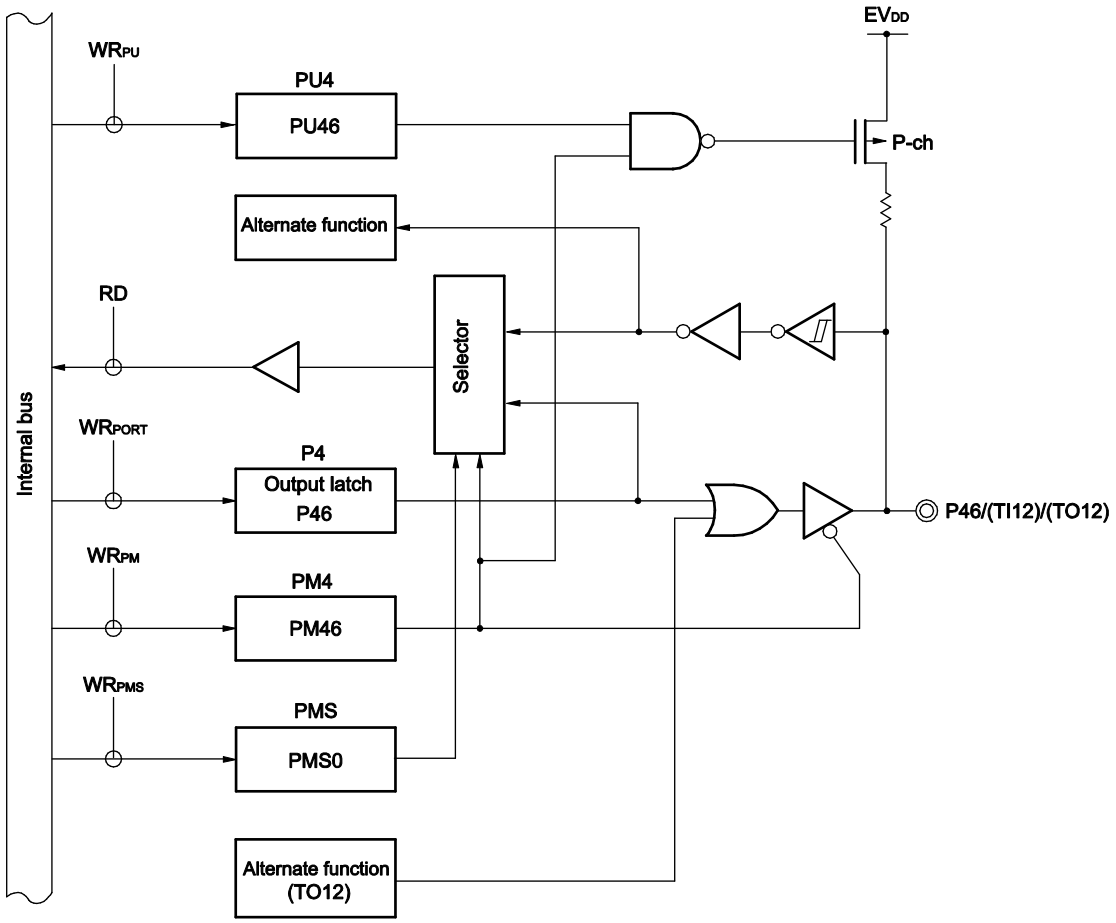

P4: Port register 4
PU4: Pull-up resistor option register 4
PM4: Port mode register 4
PMS: Port mode select register
RD: Read signal
WRxx: Write signal

Figure 4-24. Block Diagram of P47

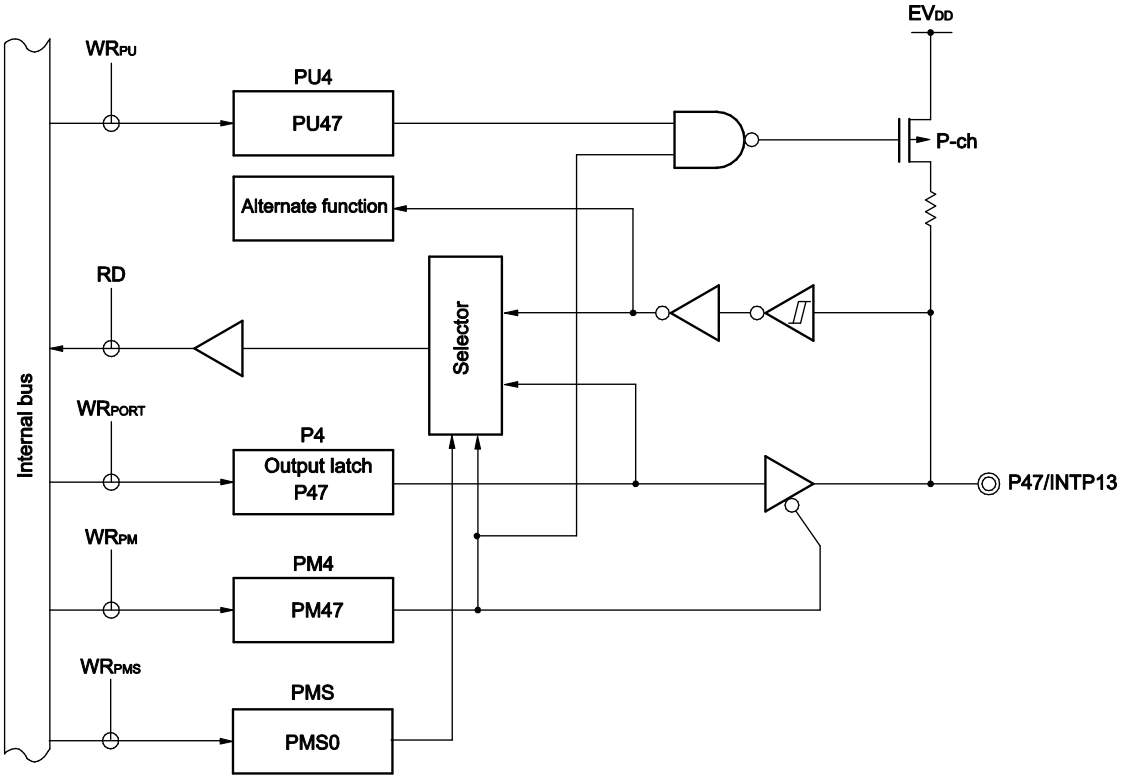

P4: Port register 4
PU4: Pull-up resistor option register 4
PM4: Port mode register 4
PMS: Port mode select register
RD: Read signal
WRxx: Write signal

4.2.5 Port 5

Port 5 is an I/O port with an output latch. Port 5 can be set to the input mode or output mode in 1-bit units using port mode register 5 (PM5). When the P50 to P57 pins are used as an input port, use of an on-chip pull-up resistor can be specified in 1-bit units by pull-up resistor option register 5 (PU5).

Input to the P54 pin can be specified through a normal input buffer or a TTL input buffer in 1-bit units using port input mode register 5 (PIM5).

For the P50 and P52 to P54 pin input, the threshold of the input buffer can be specified in 1-bit units using the port input threshold control register 5 (PITHL5).

This port can also be used for external interrupt request input, serial interface data I/O, clock I/O, slave select input, timer I/O, STOP status output, and SNOOZE status output.

Reset signal generation sets this port to input mode.

Table 4-9. Settings of Registers When Using Port 5 (1/2)

Pin Name		PM5x	PIM5x	PITHL5x	Alternate Function Setting Note 6	Remark
Name	I/O					
P50	Input	1	–	0	×	CMOS input (Schmitt1 input)
				1		CMOS input (Schmitt3 input)
	Output	0	–	×	×	
P51	Input	1	–	–	×	
	Output	0	–	–	(SO01 output = 1) Note 1	
P52	Input	1	–	0	×	CMOS input (Schmitt1 input)
				1		CMOS input (Schmitt3 input)
	Output	0	–	×	($\overline{\text{SCK01}}$ output = 1) Note 2 (STOPST output = 0) Note 5	
P53	Input	1	–	0	×	CMOS input (Schmitt1 input)
				1		CMOS input (Schmitt3 input)
	Output	0	–	×	×	
P54	Input	1	0	0	×	CMOS input (Schmitt1 input)
				1		CMOS input (Schmitt3 input)
			1	×	×	TTL input
	Output	0	×	×	(TO11 output = 0) Note 3	

(**Notes** and **Remark** are listed on the next page.)

Table 4-9. Settings of Registers When Using Port 5 (2/2)

Pin Name		PM5x	PIM5x	PITHL5x	Alternate Function Setting Note 5	Remark
Name	I/O					
P55	Input	1	–	–	×	
	Output	0	–	–	(TO13 output = 0) Note 3	
P56	Input	1	–	–	×	
	Output	0	–	–	(TO15 output = 0) Note 3 (SNZOUT1 output = 0) Note 4	
P57	Input	1	–	–	×	
	Output	0	–	–	(TO17 output = 0) Note 3 (SNZOUT0 output = 0) Note 4	

Notes 1. When a pin sharing the serial array unit function is to be used as a general-purpose port pin, the SOmn bit of the serial output register m (SOm), the SOEmn bit of the serial output enable register m (SOEm), and the SEmn bit of the serial channel enable status register m (SEm) corresponding to the target unit and channel must have the same setting as its initial value (m = 0, 1, n = 0, 1).

2. When a pin sharing the serial array unit function is to be used as a general-purpose port pin, the CKOmn bit of the serial output register m (SOm), the SOEmn bit of the serial output enable register m (SOEm), and the SEmn bit of the serial channel enable status register m (SEm) corresponding to the target unit and channel must have the same setting as its initial value (m = 0, 1, n = 0, 1).

3. When a pin sharing a timer output function of the timer array unit is to be used as a general-purpose port pin, the TOmn bit of the timer output register m (TOm) and the TOEmn bit of the timer output enable register m (TOEm) corresponding to the target unit and channel must have the same setting as in the initial state (m = 0, 1, n = 0 to 7).

4. When a pin sharing the SNOOZE status output function is to be used as a general-purpose port pin, the OUTEN0 to OUTEN7 bits of the SNOOZE status output control registers 0, 1, 2, 3 (PSNZCNT0, 1, 2, 3) must have the same setting as its initial value.

5. When a pin sharing the STOP status output function is to be used as a general-purpose port pin, the STPOEN bit of the STOP status output control register (STPSTC) must have the same setting as its initial value.

6. Functions in parentheses can be assigned via settings in the peripheral I/O redirection registers 3, 4, 6 (PIOR3, PIOR4, PIOR6). The STOPST function can be assigned via settings in the STOP status output control register (STPSTC).

Remark ×: Don't care
PM5x: Port mode register 5
PIM5x: Port input mode register 5
PITHL5x: Port input threshold control register 5

Figures 4-25 to 4-32 show block diagrams of port 5 for 100-pin products.

Figure 4-25. Block Diagram of P50

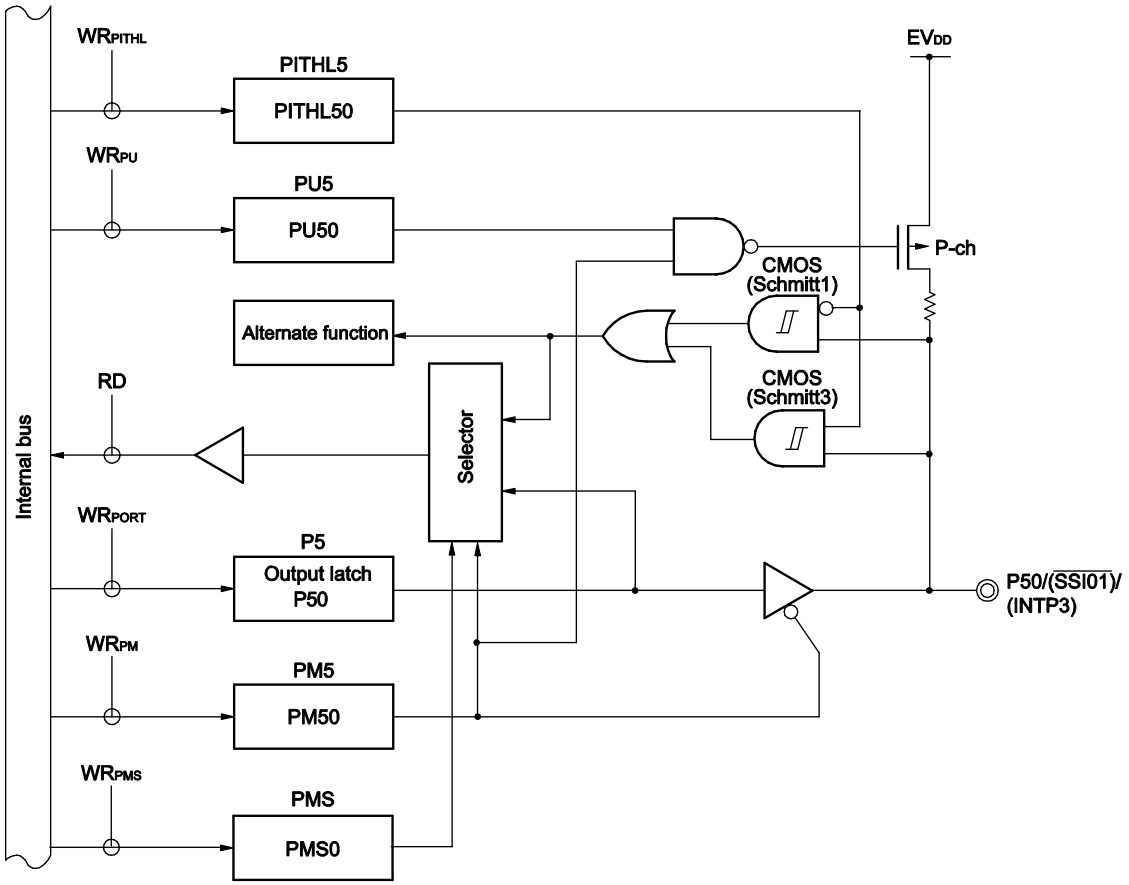

P5: Port register 5
PU5: Pull-up resistor option register 5
PM5: Port mode register 5
PMS: Port mode select register
PITHL5: Port input threshold control register 5
RD: Read signal
WRxx: Write signal

Figure 4-26. Block Diagram of P51

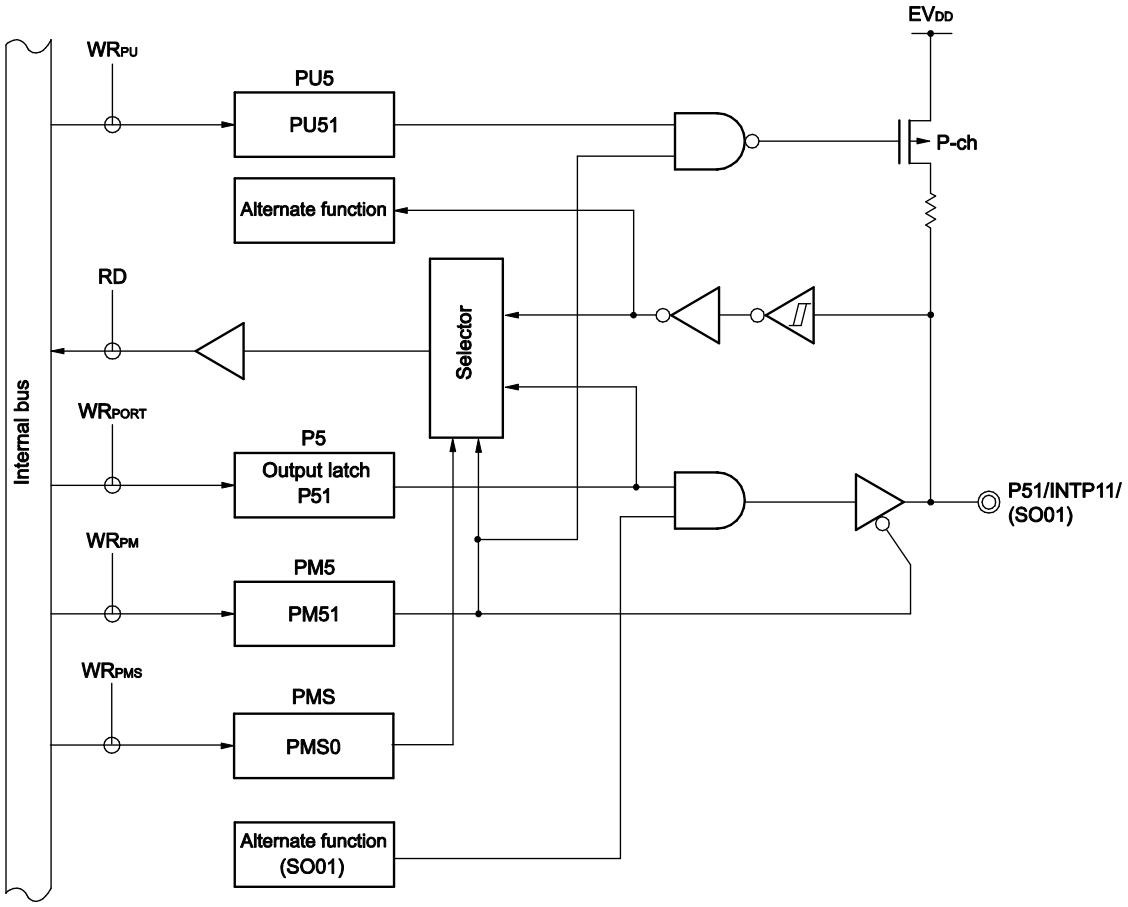

P5: Port register 5
PU5: Pull-up resistor option register 5
PM5: Port mode register 5
PMS: Port mode select register
RD: Read signal
WRxx: Write signal

Figure 4-27. Block Diagram of P52

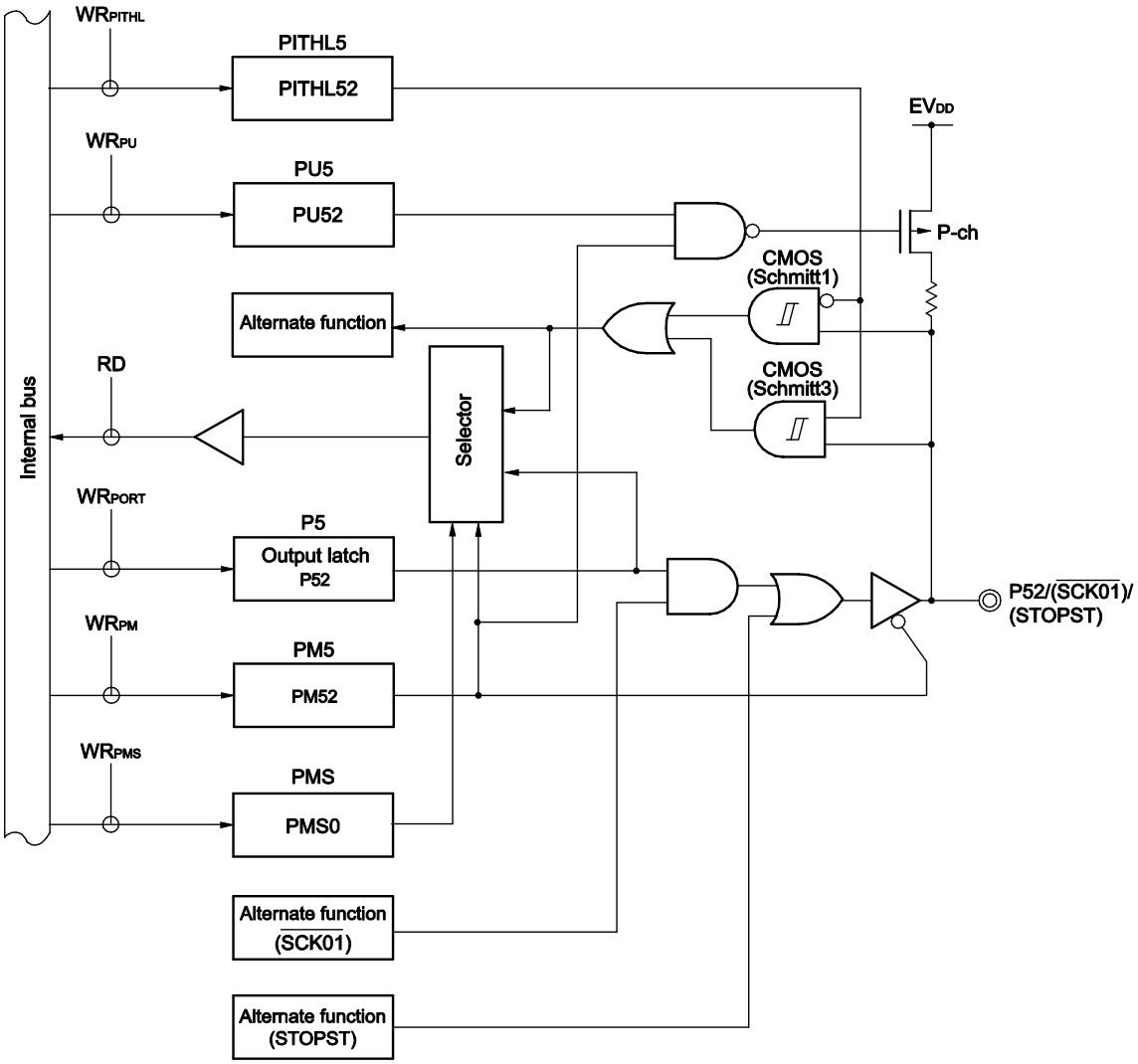

P5: Port register 5
PU5: Pull-up resistor option register 5
PM5: Port mode register 5
PMS: Port mode select register
PITHL5: Port input threshold control register 5
RD: Read signal
WRxx: Write signal

Figure 4-28. Block Diagram of P53

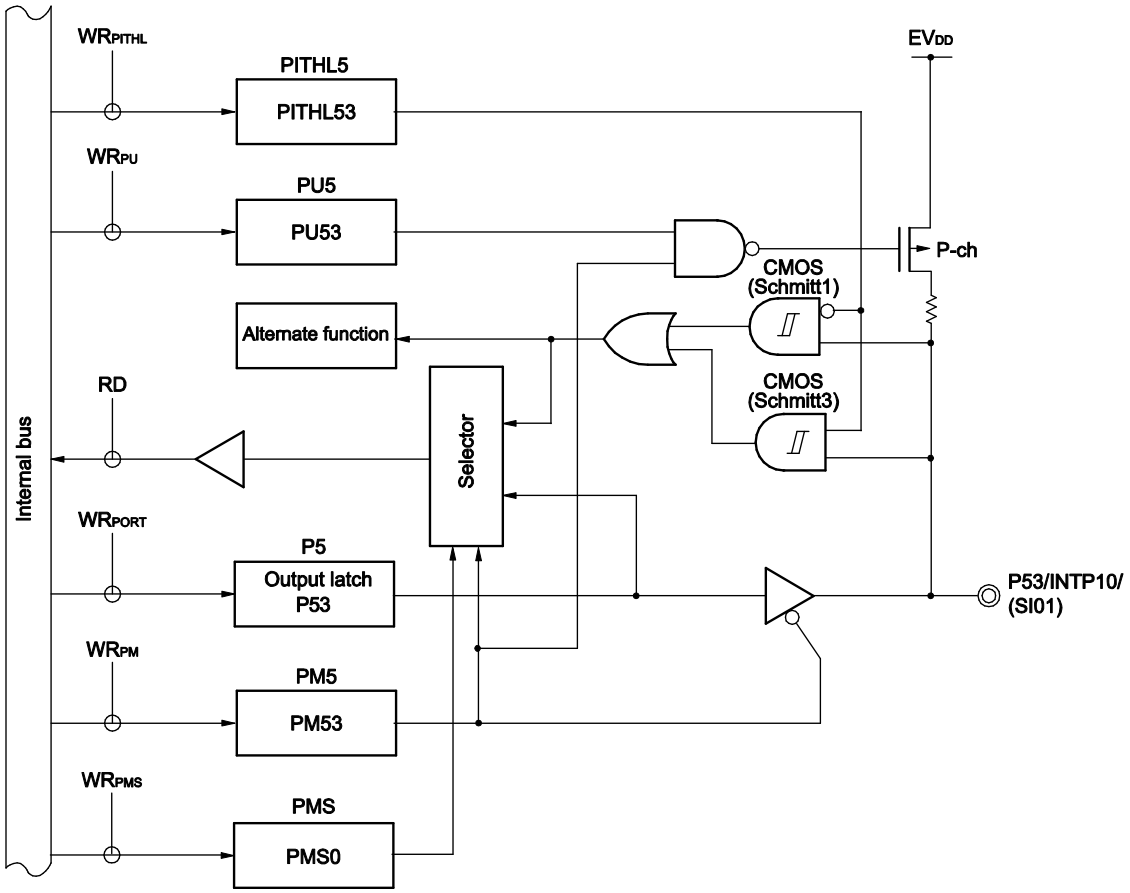

P5: Port register 5
PU5: Pull-up resistor option register 5
PM5: Port mode register 5
PMS: Port mode select register
PITHL5: Port input threshold control register 5
RD: Read signal
WRxx: Write signal

Figure 4-29. Block Diagram of P54

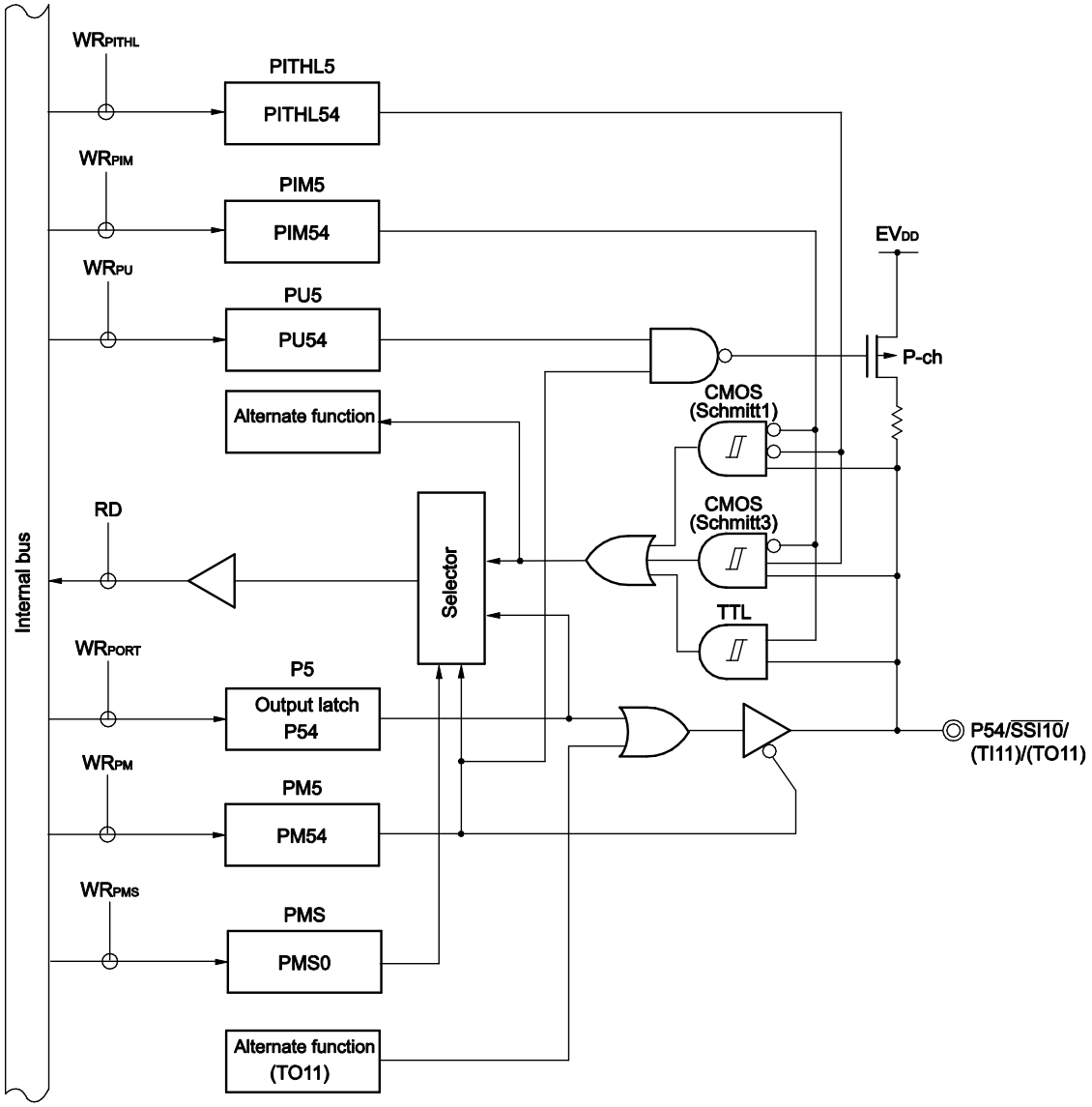

P5: Port register 5
PU5: Pull-up resistor option register 5
PM5: Port mode register 5
PIM5: Port input mode register 5
PMS: Port mode select register
PITHL5: Port input threshold control register 5
RD: Read signal
WRxx: Write signal

Figure 4-30. Block Diagram of P55

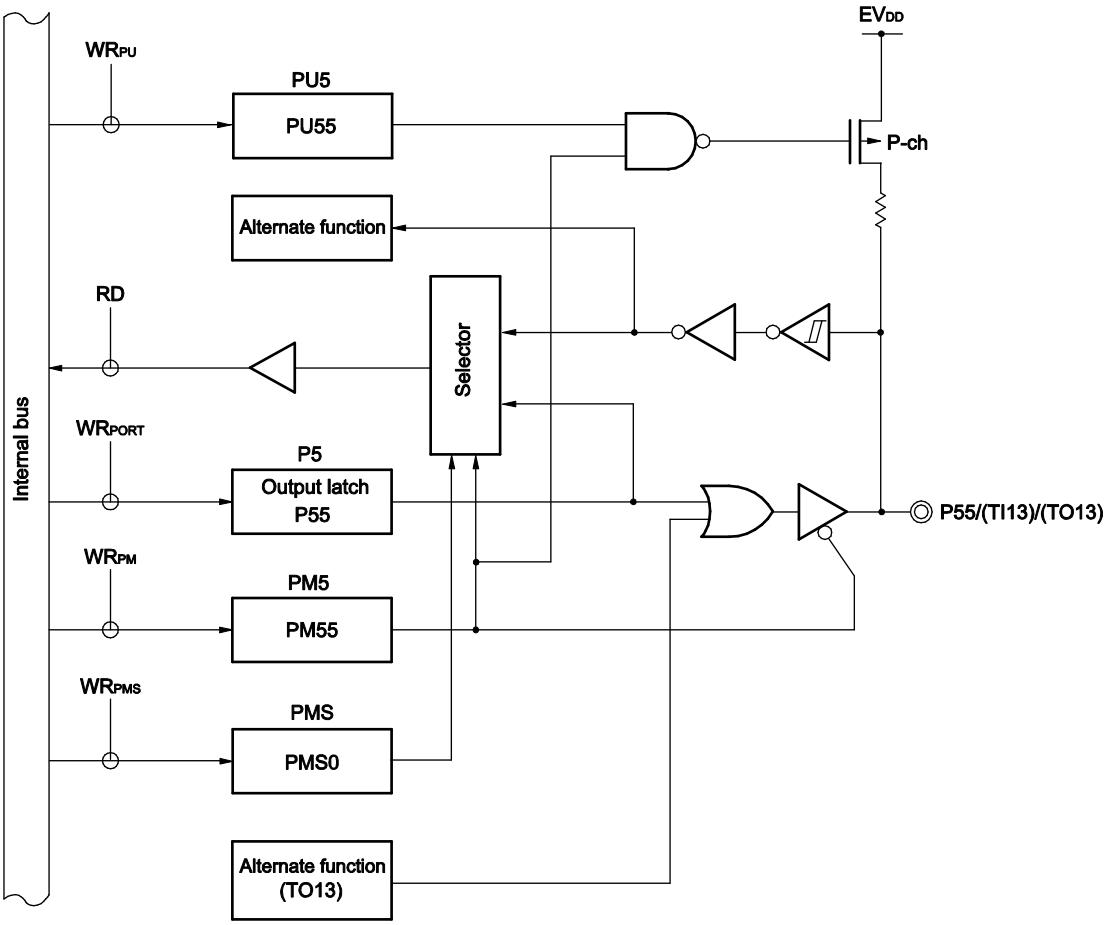

P5: Port register 5
PU5: Pull-up resistor option register 5
PM5: Port mode register 5
PMS: Port mode select register
RD: Read signal
WRxx: Write signal

Figure 4-31. Block Diagram of P56

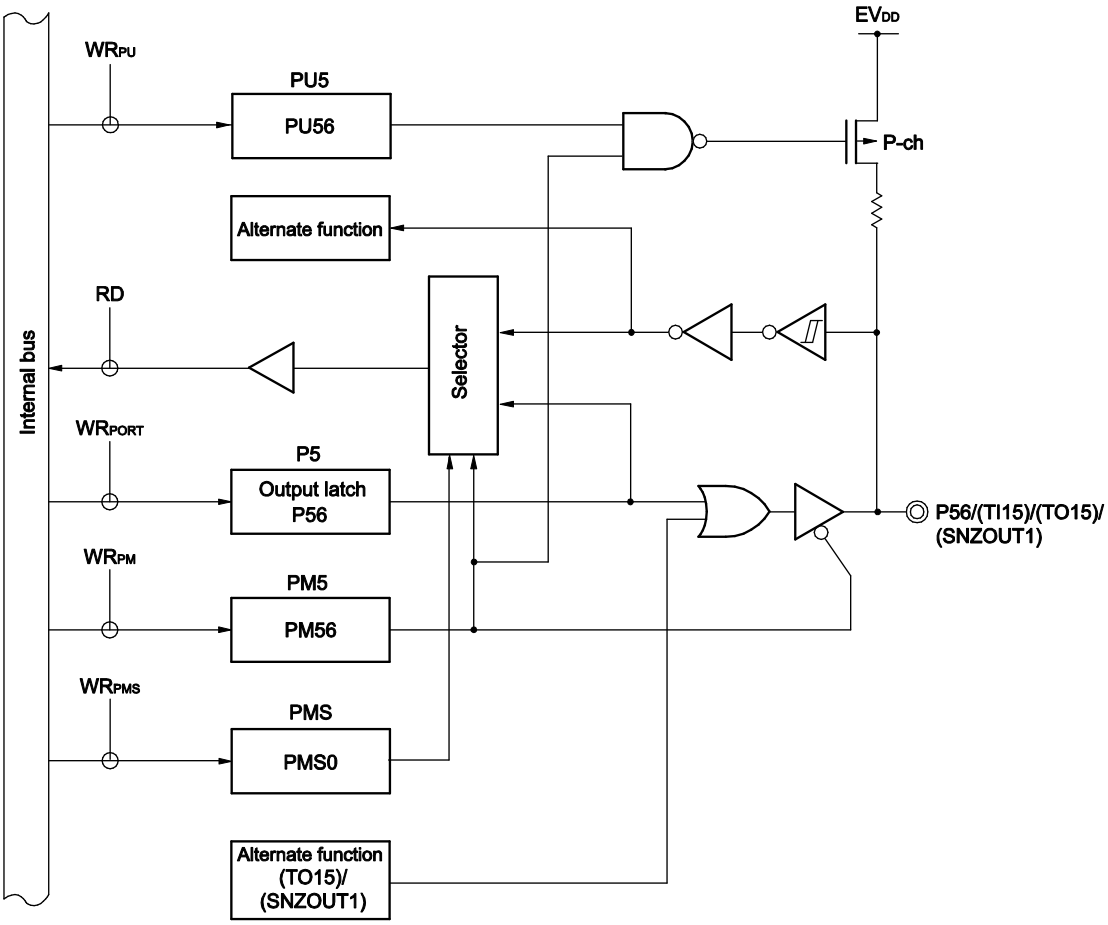

P5: Port register 5
PU5: Pull-up resistor option register 5
PM5: Port mode register 5
PMS: Port mode select register
RD: Read signal
WRxx: Write signal

Figure 4-32. Block Diagram of P57

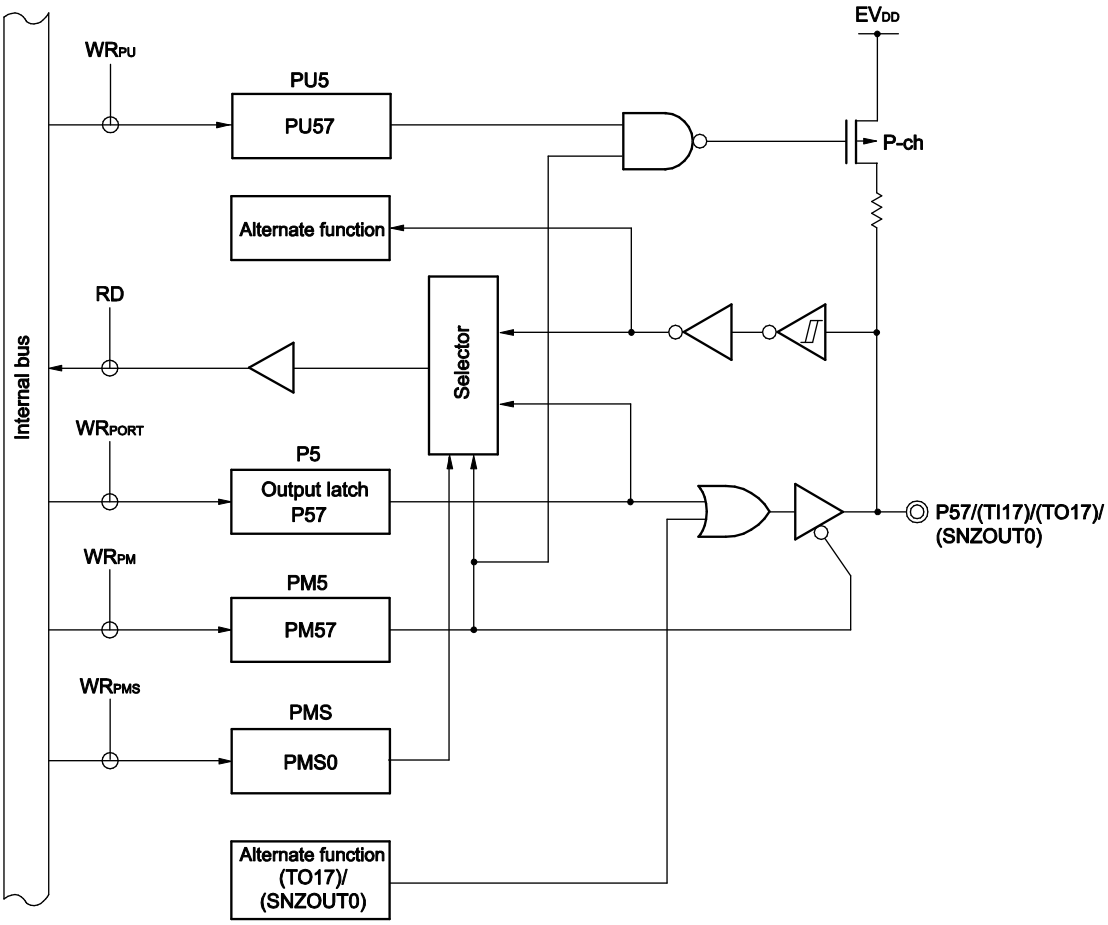

P5: Port register 5
PU5: Pull-up resistor option register 5
PM5: Port mode register 5
PMS: Port mode select register
RD: Read signal
WRxx: Write signal

4.2.6 Port 6

Port 6 is an I/O port with an output latch. Port 6 can be set to the input mode or output mode in 1-bit units using port mode register 6 (PM6). Input to the P62 and P63 pins can be specified through a normal input buffer or a TTL input buffer in 1-bit units using port input mode register 6 (PIM6). When the P60 to P67 pins are used as an input port, use of an on-chip pull-up resistor can be specified in 1-bit units by pull-up resistor option register 6 (PU6).

Output from the P60 to P63 pins can be specified as N-ch open-drain output (EV_{DD} tolerance) in 1-bit units using port output mode register 6 (POM6).

For the P60 to P63 pin input, the threshold of the input buffer can be specified in 1-bit units using the port input threshold control register 6 (PITHL6)

This port can also be used for serial interface data I/O and clock I/O, slave select input, timer I/O, and SNOOZE status output.

Reset signal generation sets this port to input mode.

Table 4-10. Settings of Registers When Using Port 6 (1/2)

Pin Name		PM6x	PIM6x	POM6x	PITHL6x	Alternate Function Setting Note 6	Remark
Name	I/O						
P60	Input	1	–	×	0	×	CMOS input (Schmitt1 input)
					1		CMOS input (Schmitt3 input)
	Output	0	–	0	×	($\overline{SCK00}$/SCL00 output = 1) Note 1	CMOS output
				1	×		N-ch O.D output
P61	Input	1	–	×	0	×	CMOS input (Schmitt1 input)
					1		CMOS input (Schmitt3 input)
	Output	0	–	0	×	SDA00 output = 1 Note 2	CMOS output
				1	×		N-ch O.D output
P62	Input	1	0	×	0	×	CMOS input (Schmitt1 input)
					1		CMOS input (Schmitt3 input)
			1	×	×	×	TTL input
	Output	0	×	0	×	SCLA0 output = 0 Note 3	CMOS output
				1	×	(SO00/TXD0 output = 1) Note 2	N-ch O.D output

(**Notes** and **Remark** are listed on the next page.)

Table 4-10. Settings of Registers When Using Port 6 (2/2)

Pin Name		PM6x	PIM6x	POM6x	PITHL6x	Alternate Function Setting Note 6	Remark
Name	I/O						
P63	Input	1	0	×	0	×	CMOS input (Schmitt1 input)
					1		CMOS input (Schmitt3 input)
			1	×	×	×	TTL input
	Output	0	×	0	×	SDAA0 output = 0 Note 3	CMOS output
				1	×		N-ch O.D output
P64	Input	1	–	–	–	×	
	Output	0	–	–	–	(TO14 output = 0) Note 4 (SNZOUT3 output = 0) Note 5	
P65	Input	1	–	–	–	×	
	Output	0	–	–	–	(TO16 output = 0) Note 4 (SNZOUT2 output = 0) Note 5	
P66	Input	1	–	–	–	×	
	Output	0	–	–	–	(TO00 output = 0) Note 4	
P67	Input	1	–	–	–	×	
	Output	0	–	–	–	(TO02 output = 0) Note 4	

Notes 1. When a pin sharing the serial array unit function is to be used as a general-purpose port pin, the CKOmn bit of the serial output register m (SOm), the SOEmn bit of the serial output enable register m (SOEm), and the SEmn bit of the serial channel enable status register m (SEm) corresponding to the target unit and channel must have the same setting as its initial value (m = 0, 1, n = 0, 1).

2. When a pin sharing the serial array unit function is to be used as a general-purpose port pin, the SOmn bit of the serial output register m (SOm), the SOEmn bit of the serial output enable register m (SOEm), and the SEmn bit of the serial channel enable status register m (SEm) corresponding to the target unit and channel must have the same setting as its initial value (m = 0, 1, n = 0, 1).

3. When a pin sharing the serial interface IICA function is to be used as a general-purpose port pin, operation of the corresponding serial interface IICA must be stopped.

4. When a pin sharing a timer output function of the timer array unit is to be used as a general-purpose port pin, the TOmn bit of the timer output register m (TOm) and the TOEmn bit of the timer output enable register m (TOEm) corresponding to the target unit and channel must have the same setting as in the initial state (m = 0, 1, n = 0 to 7).

5. When a pin sharing the SNOOZE status output function is to be used as a general-purpose port pin, the OUTEN0 to OUTEN7 bits of the SNOOZE status output control registers 0, 1, 2, 3 (PSNZCNT0, 1, 2, 3) must have the same setting as its initial value.

6. Functions in parentheses can be assigned via settings in the peripheral I/O redirection registers 1, 3, 4, 6 (PIOR1, PIOR3, PIOR4, PIOR6).

Remark ×: Don't care
PM6x: Port mode register 6
PIM6x: Port input mode register 6
POM6x: Port output mode register 6
PITHL6x: Port input threshold control register 6

Figures 4-33 to 4-40 show block diagrams of port 6 for 100-pin products.

Figure 4-33. Block Diagram of P60

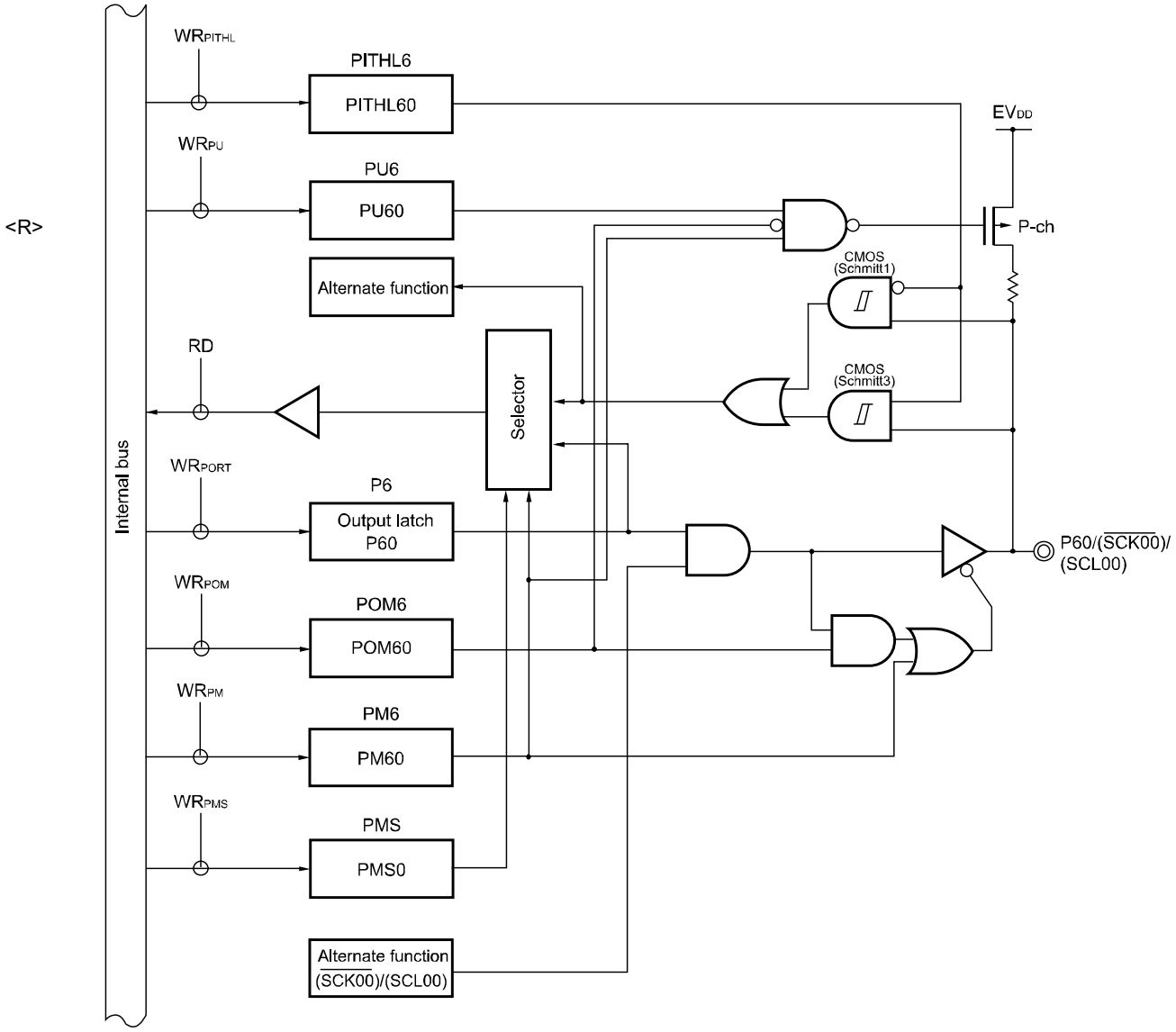

P6: Port register 6
PU6: Pull-up resistor option register 6
PM6: Port mode register 6
POM6: Port output mode register 6
PMS: Port mode select register
PITHL6: Port input threshold control register 6
RD: Read signal
WRxx: Write signal

Figure 4-34. Block Diagram of P61

<R>

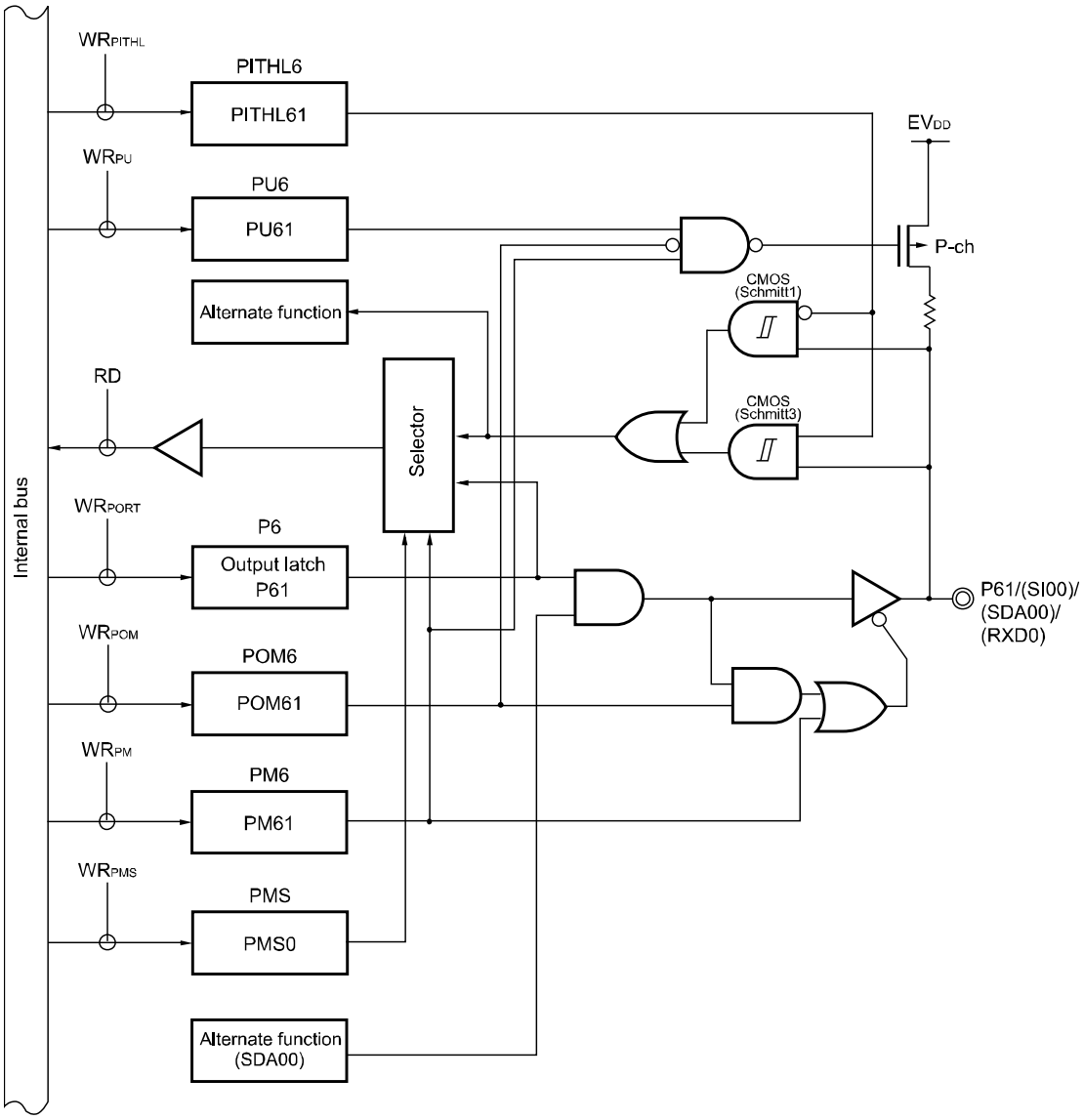

P6: Port register 6
PU6: Pull-up resistor option register 6
PM6: Port mode register 6
POM6: Port output mode register 6
PMS: Port mode select register
PITHL6: Port input threshold control register 6
RD: Read signal
WRxx: Write signal

Figure 4-35. Block Diagram of P62

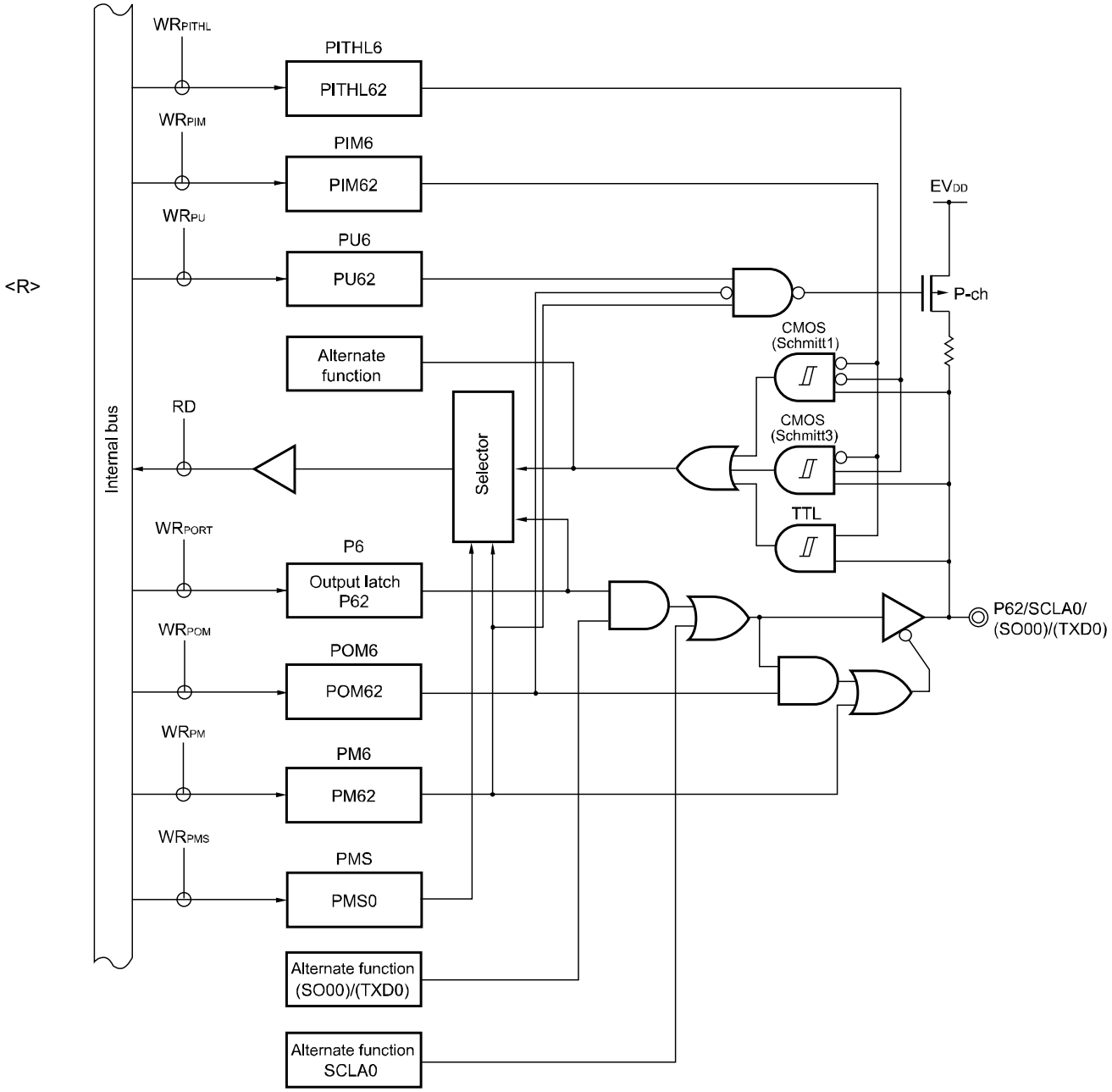

P6: Port register 6
PU6: Pull-up resistor option register 6
PM6: Port mode register 6
PIM6: Port input mode register 6
POM6: Port output mode register 6
PMS: Port mode select register
PITHL6: Port input threshold control register 6
RD: Read signal
WRxx: Write signal

Figure 4-36. Block Diagram of P63

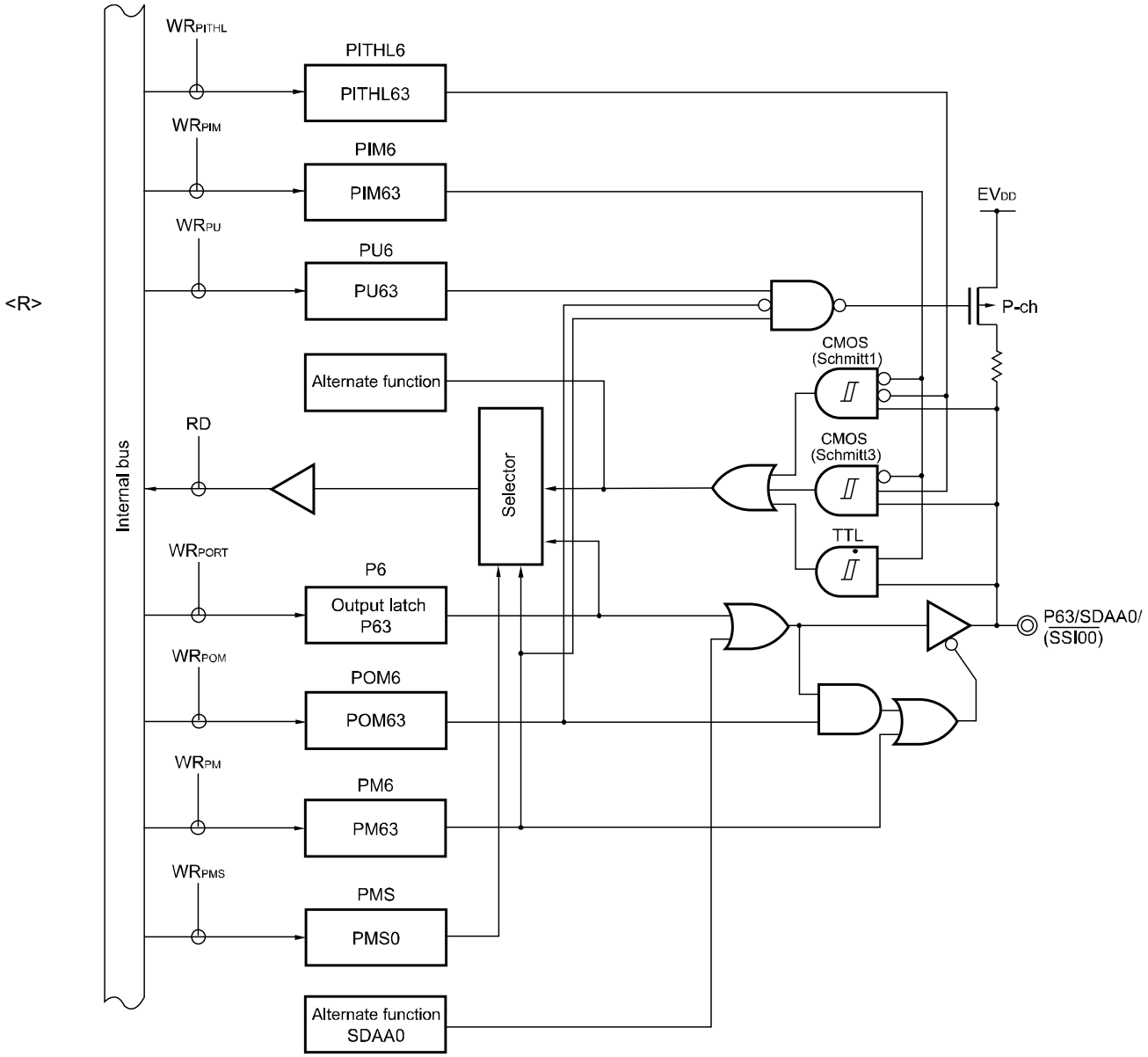

P6: Port register 6
PU6: Pull-up resistor option register 6
PM6: Port mode register 6
PIM6: Port input mode register 6
POM6: Port output mode register 6
PMS: Port mode select register
PITHL6: Port input threshold control register 6
RD: Read signal
WRxx: Write signal

Figure 4-37. Block Diagram of P64

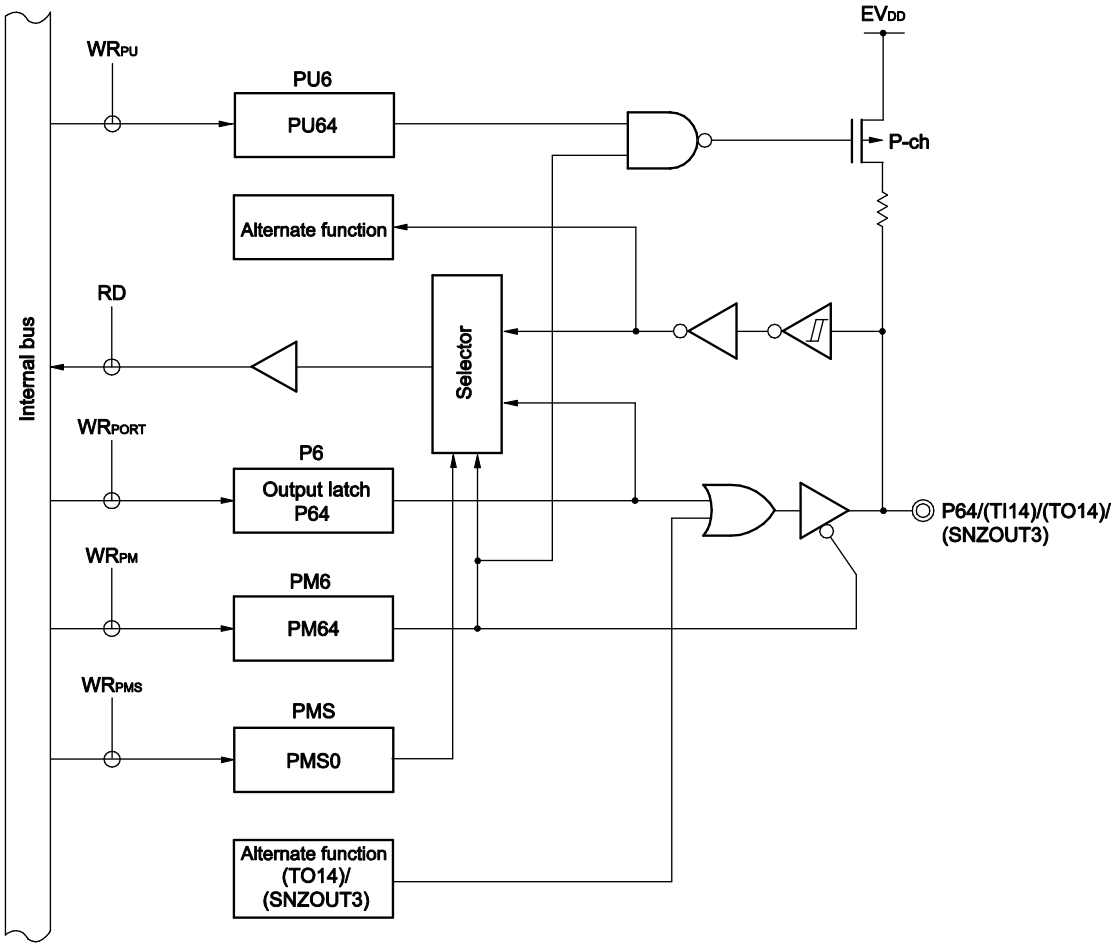

P6: Port register 6
PU6: Pull-up resistor option register 6
PM6: Port mode register 6
PMS: Port mode select register
RD: Read signal
WRxx: Write signal

Figure 4-38. Block Diagram of P65

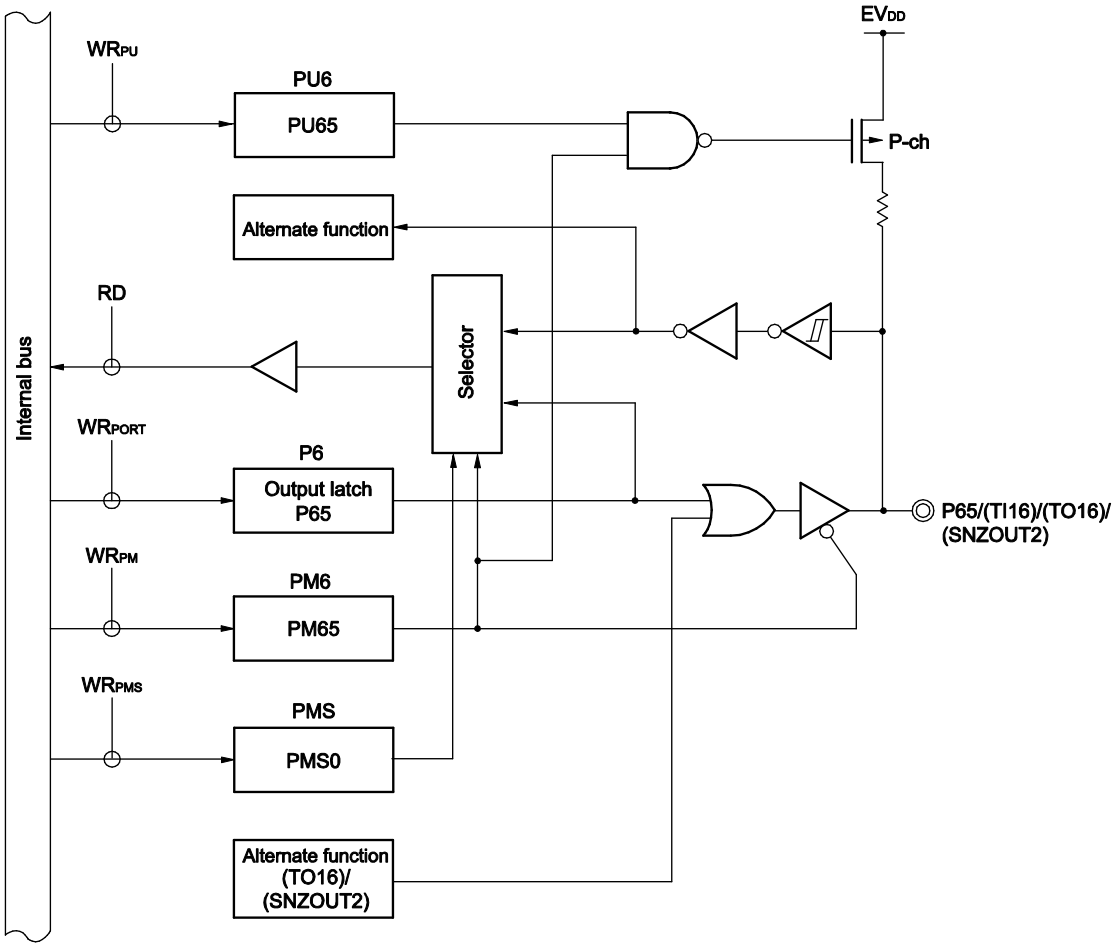

P6: Port register 6
PU6: Pull-up resistor option register 6
PM6: Port mode register 6
PMS: Port mode select register
RD: Read signal
WRxx: Write signal

Figure 4-39. Block Diagram of P66

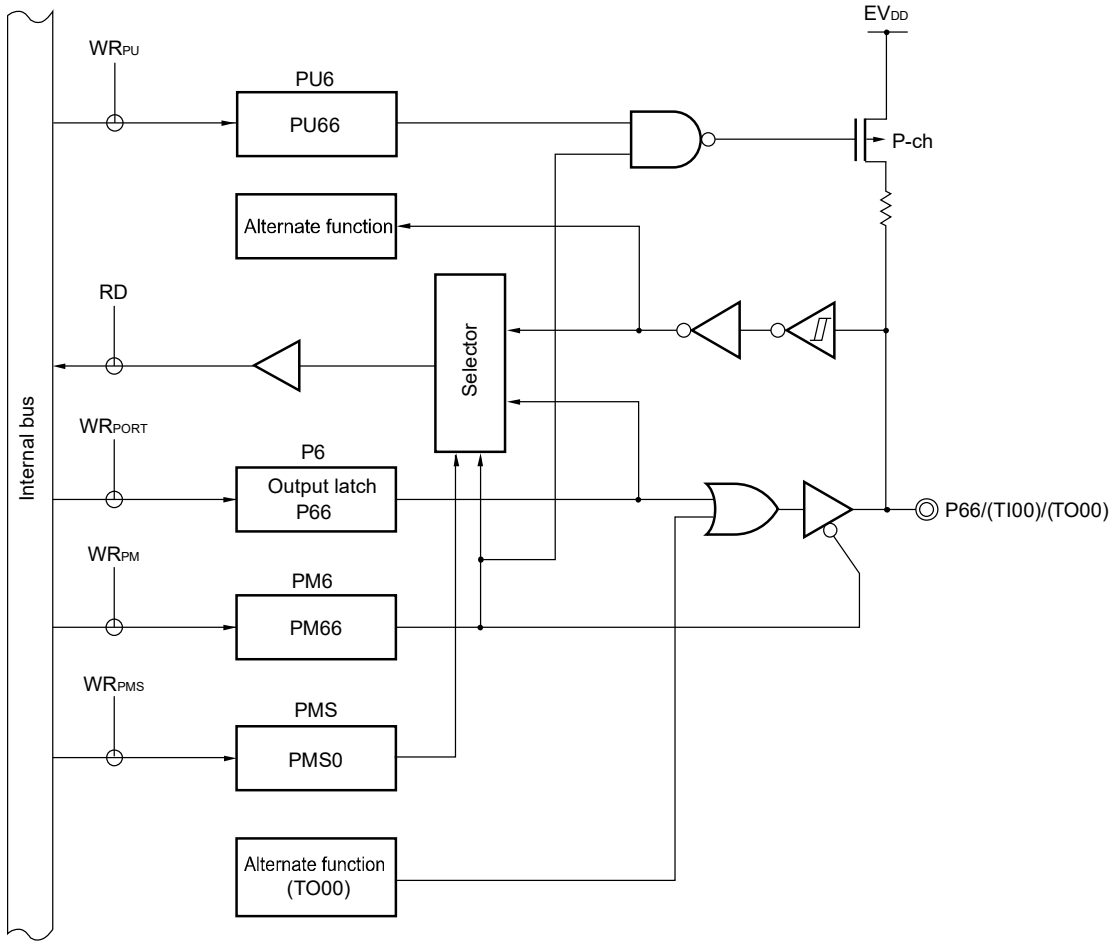

P6: Port register 6
PU6: Pull-up resistor option register 6
PM6: Port mode register 6
PMS: Port mode select register
RD: Read signal
WRxx: Write signal

Figure 4-40. Block Diagram of P67

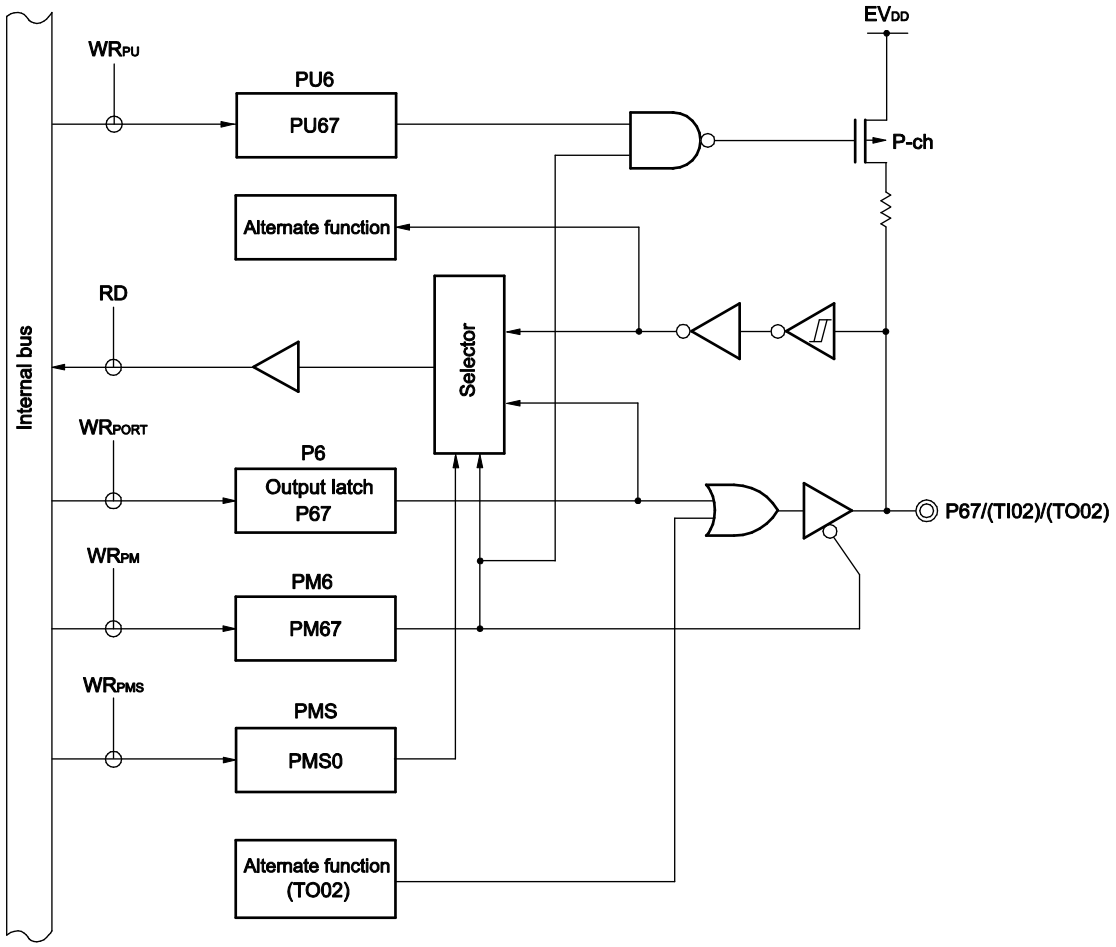

P6: Port register 6
PU6: Pull-up resistor option register 6
PM6: Port mode register 6
PMS: Port mode select register
RD: Read signal
WRxx: Write signal

4.2.7 Port 7

Port 7 is an I/O port with an output latch. Port 7 can be set to the input mode or output mode in 1-bit units using port mode register 7 (PM7). When used as an input port, use of an on-chip pull-up resistor can be specified in 1-bit units by pull-up resistor option register 7 (PU7).

Input to the P70, P71, and P73 pins can be specified through a normal input buffer or a TTL input buffer in 1-bit units using port input mode register 7 (PIM7). For the P70, P71, P73, and P75 to P77 pin input, the threshold of the input buffer can be specified in 1-bit units using the port input threshold control register 7 (PITHL7). Output from the P70 to P72 pins can be specified as N-ch open-drain output (EV_{DD} tolerance) in 1-bit units using port output mode register 7 (POM7). To use P70 to P74 as input pins, set them in the digital mode or analog mode in 1-bit units by using the port mode control register 7 (PMC7).

This port can also be used for A/D converter analog input, key interrupt input, data I/O for serial interfaces, clock I/O, slave select input, timer I/O, external interrupt request input, SNOOZE status output, and serial data I/O for CAN.

To use P70/ANI26 to P74/ANI30 as digital input pins, set them in the digital I/O mode by using the port mode control register 7 (PMC7) and in the input mode by using the PM7 register. Use these pins starting from the upper bit.

To use P70/ANI26 to P74/ANI30 as digital output pins, set them in the digital I/O mode by using the port mode control register 7 (PMC7) and in the output mode by using the PM7 register.

To use P70/ANI26 to P74/ANI30 as analog input pins, set them in the analog input mode by using the port mode control register 7 (PMC7) and in the input mode by using the PM7 register. Use these pins starting from the lower bit.

Reset signal generation sets P70 to P74 to analog input mode and P75 to P77 to input mode.

Table 4-11. Settings of Registers When Using Port 7 (1/2)

Pin Name		PM7x	PIM7x	POM7x	PMC7x	PITHL7x	Alternate Function Setting Note 6	Remark
Name	I/O							
P70	Input	1	0	×	0	0	×	CMOS input (Schmitt1 input)
						1		CMOS input (Schmitt3 input)
			1	×	0	×	×	TTL input
	Output	0	×	0	0	×	SDA11 output = 1 Note 1 TO15 output = 0 Note 2 SNZOUT4 output = 0 Note 3	CMOS output
			×	1	0	×		N-ch O.D output
P71	Input	1	0	×	0	0	×	CMOS input (Schmitt1 input)
						1		CMOS input (Schmitt3 input)
			1	×	0	×	×	TTL input
	Output	0	×	0	0	×	$\overline{\text{SCK11}}$ output = 1 Note 4 TO17 output = 0 Note 2 SCL11 output = 1 Note 4 SNZOUT5 output = 0 Note 3	CMOS output
			×	1	0	×		N-ch O.D output
P72	Input	1	–	×	0	–	×	
	Output	0	–	0	0	–	SO11 output = 1 Note 1 SNZOUT6 output = 0 Note 3 (CTXD0 output = 1 Note 5)	CMOS output
			–	1	0	–		N-ch O.D output
P73	Input	1	0	–	0	0	×	CMOS input (Schmitt1 input)
						1	×	CMOS input (Schmitt3 input)
			1	–	0	×	×	TTL input
	Output	0	×	–	0	×	SNZOUT7 output = 0 Note 3	CMOS output
P74	Input	1	–	–	0	–	×	
	Output	0	–	–	0	–	(SO10 output = 1) Note 1 (TXD1 output = 1) Note 1	

<R>

(**Notes** and **Remark** are listed on the next page.)

Table 4-11. Settings of Registers When Using Port 7 (2/2)

Pin Name		PM7x	PIM7x	POM7x	PMC7x	PITHL7x	Alternate Function Setting	Remark
Name	I/O							
P75	Input	1	–	–	–	0	×	CMOS input (Schmitt1 input)
						1	×	CMOS input (Schmitt3 input)
	Output	0	–	–	–	×	×	
P76	Input	1	–	–	–	0	×	CMOS input (Schmitt1 input)
						1	×	CMOS input (Schmitt3 input)
	Output	0	–	–	–	×	($\overline{\text{SCK10}}$ output = 1 Note 4)	
P77	Input	1	–	–	–	0	×	CMOS input (Schmitt1 input)
						1	×	CMOS input (Schmitt3 input)
	Output	0	–	–	–	×	×	

Notes 1. When a pin sharing the serial array unit function is to be used as a general-purpose port pin, the SOmn bit of the serial output register m (SOm), the SOEmn bit of the serial output enable register m (SOEm), and the SEmn bit of the serial channel enable status register m (SEm) corresponding to the target unit and channel must have the same setting as its initial value (m = 0, 1, n = 0, 1).

2. When a pin sharing a timer output function of the timer array unit is to be used as a general-purpose port pin, the TOmn bit of the timer output register m (TOm) and the TOEmn bit of the timer output enable register m (TOEm) corresponding to the target unit and channel must have the same setting as in the initial state (m = 0, 1, n = 0 to 7).

3. When a pin sharing the SNOOZE status output function is to be used as a general-purpose port pin, the OUTEN0 to OUTEN7 bits of the SNOOZE status output control registers 0, 1, 2, 3 (PSNZCNT0, 1, 2, 3) must have the same setting as its initial value.

4. When a pin sharing the serial array unit function is to be used as a general-purpose port pin, the CKOmn bit of the serial output register m (SOm), the SOEmn bit of the serial output enable register m (SOEm), and the SEmn bit of the serial channel enable status register m (SEm) corresponding to the target unit and channel must have the same setting as its initial value (m = 0, 1, n = 0, 1).

5. When a pin sharing the serial data output function of the CAN is to be used as a general-purpose port pin, operation of the corresponding CAN must be stopped.

6. Functions in parentheses can be assigned via settings in the peripheral I/O redirection register 4 (PIOR4).

Remark ×: Don't care
PM7x: Port mode register 7
PIM7x: Port input mode register 7
POM7x: Port output mode register 7
PMC7x: Port mode control register 7
PITHL7x: Port input threshold control register 7

Table 4-12. Setting Functions of P70/ANI26 to P74/ANI30 Pins

<R>

PMC7 Register	PM7 Register	ADS Register	P70/ANI26 to P74/ANI30 Pins
Digital I/O selection	Input mode	—	Digital input
	Output mode	—	Digital output
Analog input selection	Input mode	Selects ANI.	Analog input (to be converted)
		Does not select ANI.	Analog input (not to be converted)
	Output mode	Selects ANI.	Setting prohibited
		Does not select ANI.	

Reset signal generation sets P70/ANI26 to P74/ANI30 to analog input mode.

Figures 4-41 to 4-48 show block diagrams of port 7 for 100-pin products.

<R> **Figure 4-41. Block Diagram of P70**

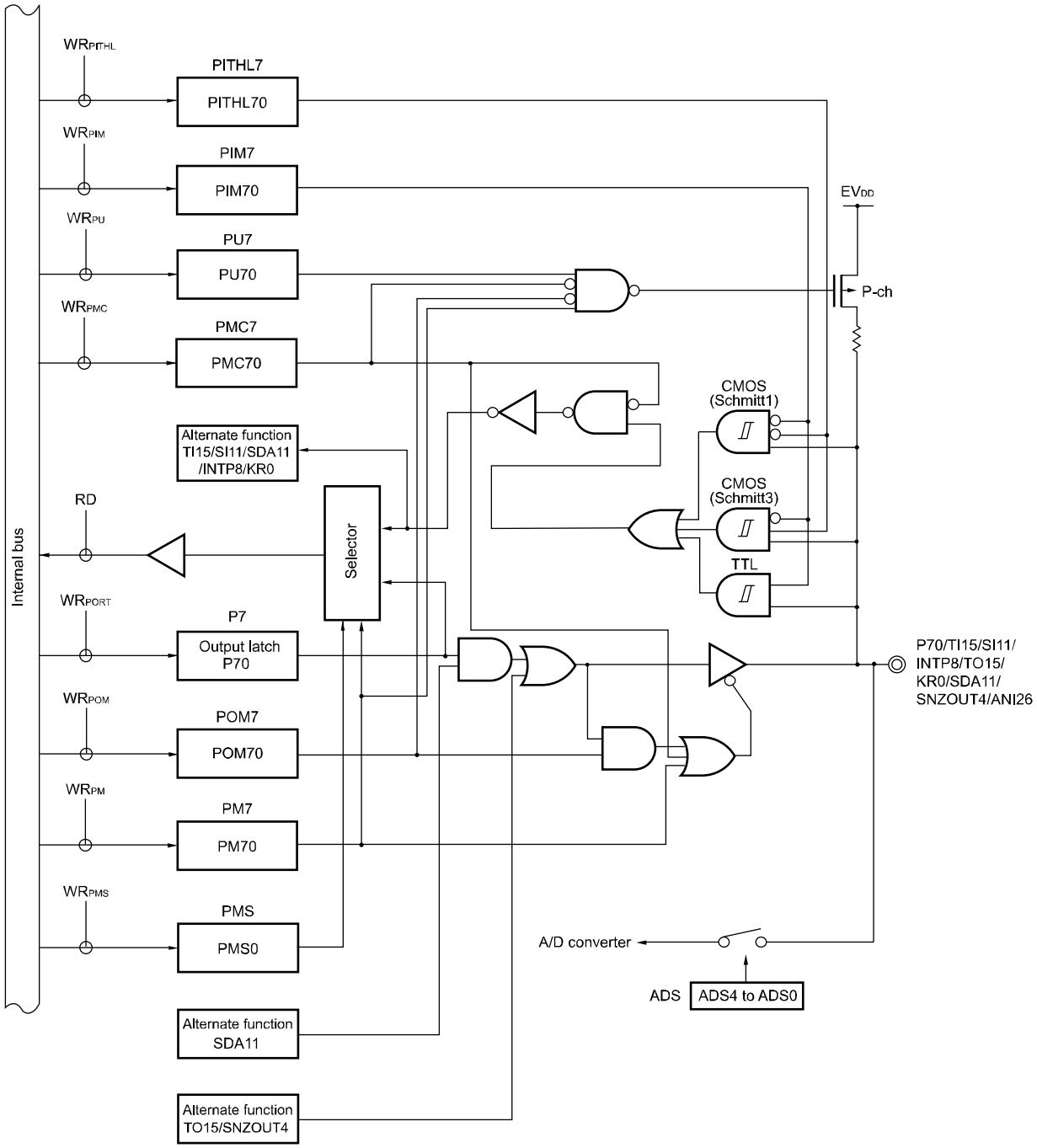

P7:	Port register 7
PU7:	Pull-up resistor option register 7
PM7:	Port mode register 7
PIM7:	Port input mode register 7
POM7:	Port output mode register 7
PMC7:	Port mode control register 7
PMS:	Port mode select register
PITHL7:	Port input threshold control register 7
ADS:	Analog input channel specification register
RD:	Read signal
WRxx:	Write signal

Figure 4-42. Block Diagram of P71

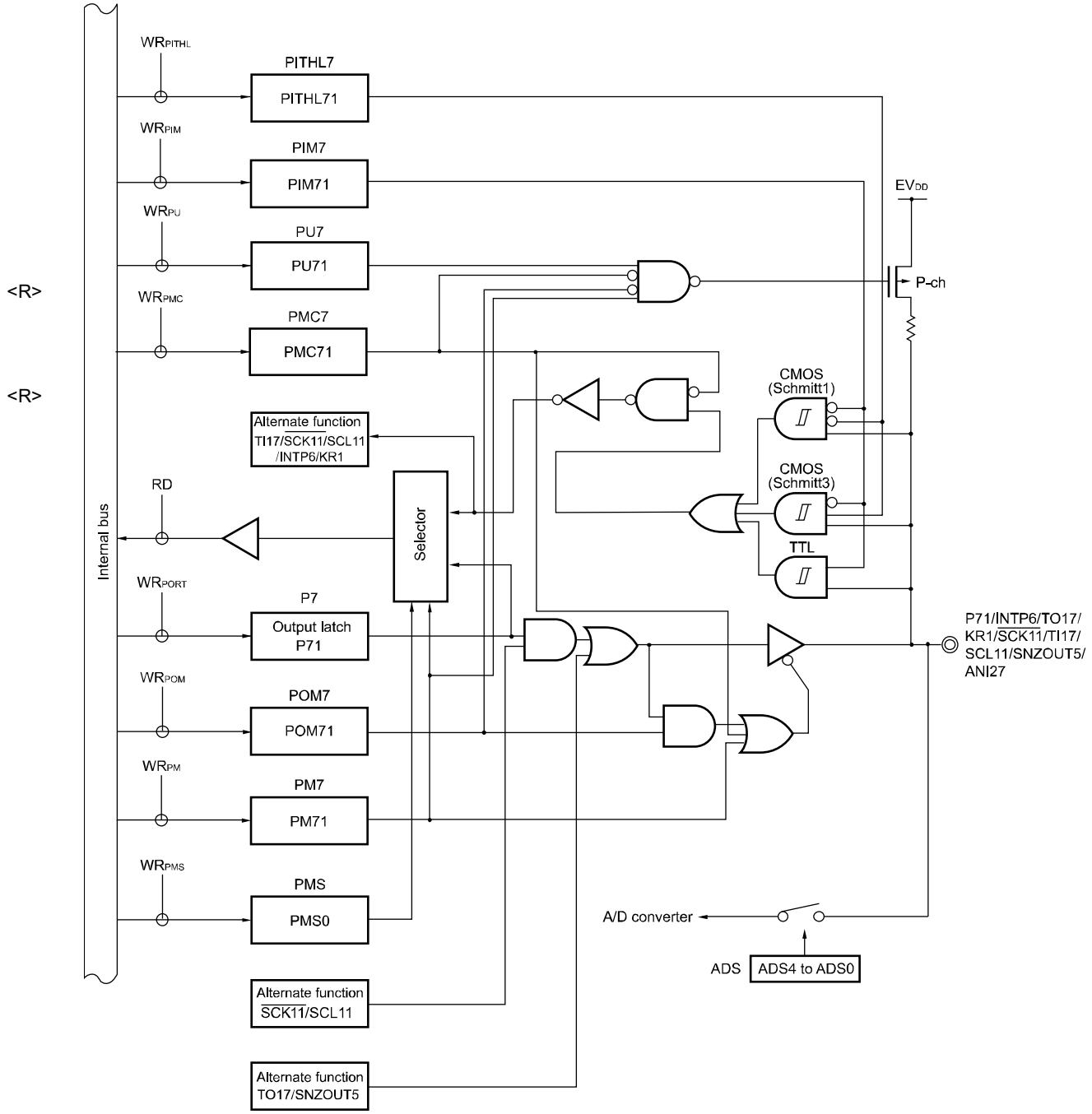

P7: Port register 7
PU7: Pull-up resistor option register 7
PM7: Port mode register 7
PIM7: Port input mode register 7
POM7: Port output mode register 7
PMC7: Port mode control register 7
PMS: Port mode select register
PITHL7: Port input threshold control register 7
ADS: Analog input channel specification register
RD: Read signal
WRxx: Write signal

<R> **Figure 4-43. Block Diagram of P72**

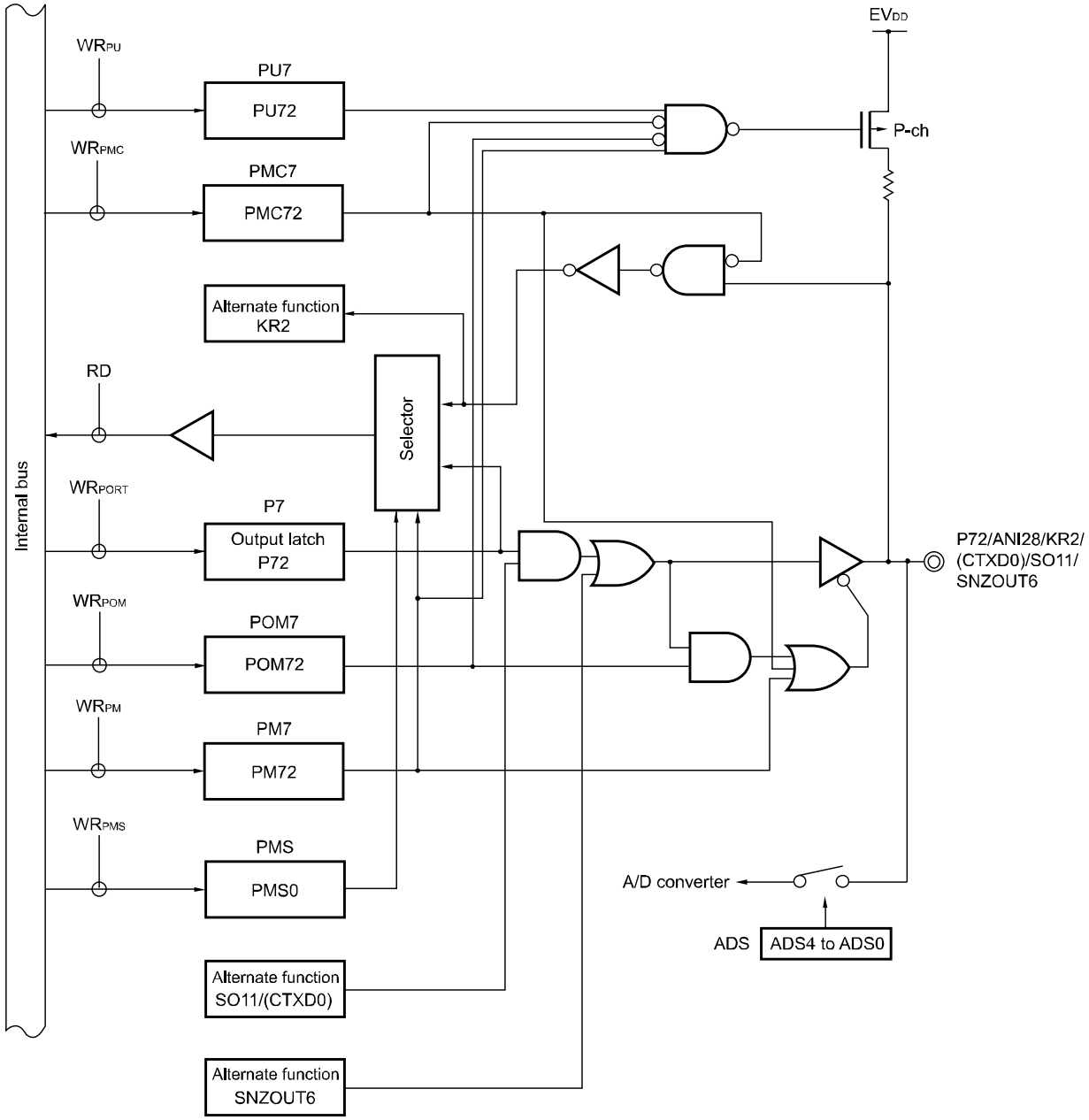

P7: Port register 7
PU7: Pull-up resistor option register 7
PM7: Port mode register 7
POM7: Port output mode register 7
PMC7: Port mode control register 7
PMS: Port mode select register
ADS: Analog input channel specification register
RD: Read signal
WRxx: Write signal

Figure 4-44. Block Diagram of P73

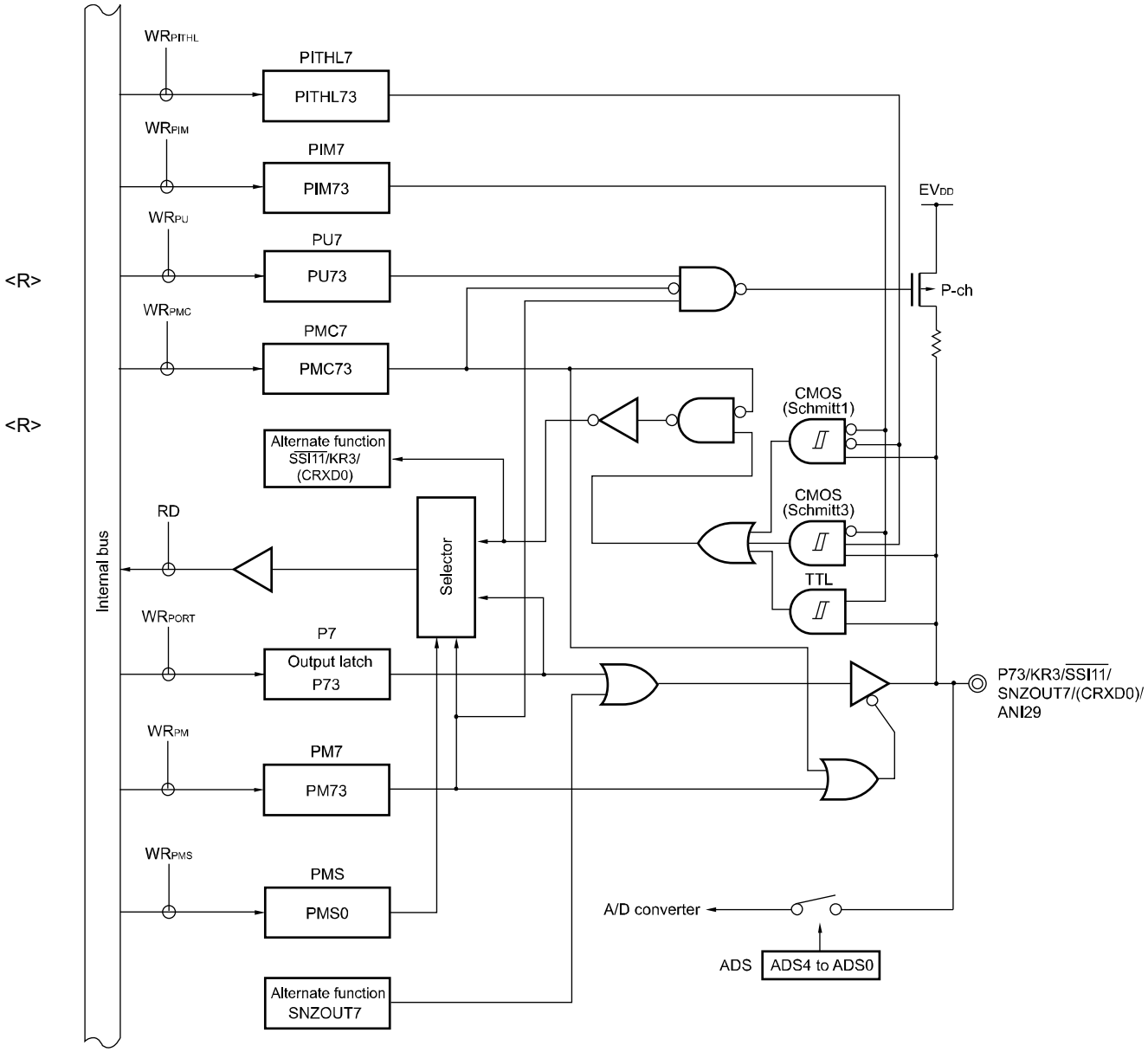

P7:	Port register 7
PU7:	Pull-up resistor option register 7
PM7:	Port mode register 7
PIM7:	Port input mode register 7
PMC7:	Port mode control register 7
PMS:	Port mode select register
PITHL7:	Port input threshold control register 7
ADS:	Analog input channel specification register
RD:	Read signal
WRxx:	Write signal

Figure 4-45. Block Diagram of P74

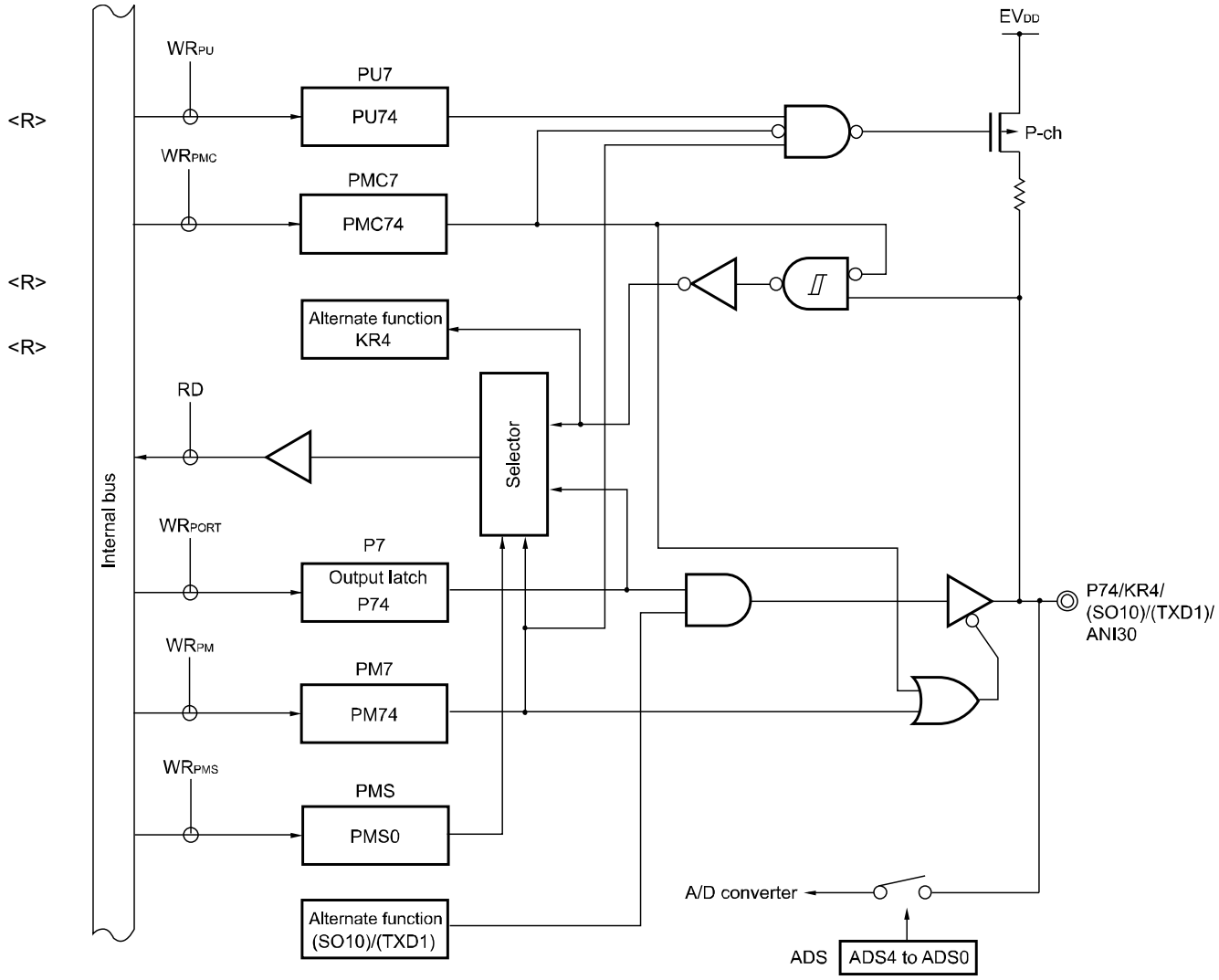

P7: Port register 7
PU7: Pull-up resistor option register 7
PM7: Port mode register 7
PMC7: Port mode control register 7
PMS: Port mode select register
ADS: Analog input channel specification register
RD: Read signal
WRxx: Write signal

Figure 4-46. Block Diagram of P75

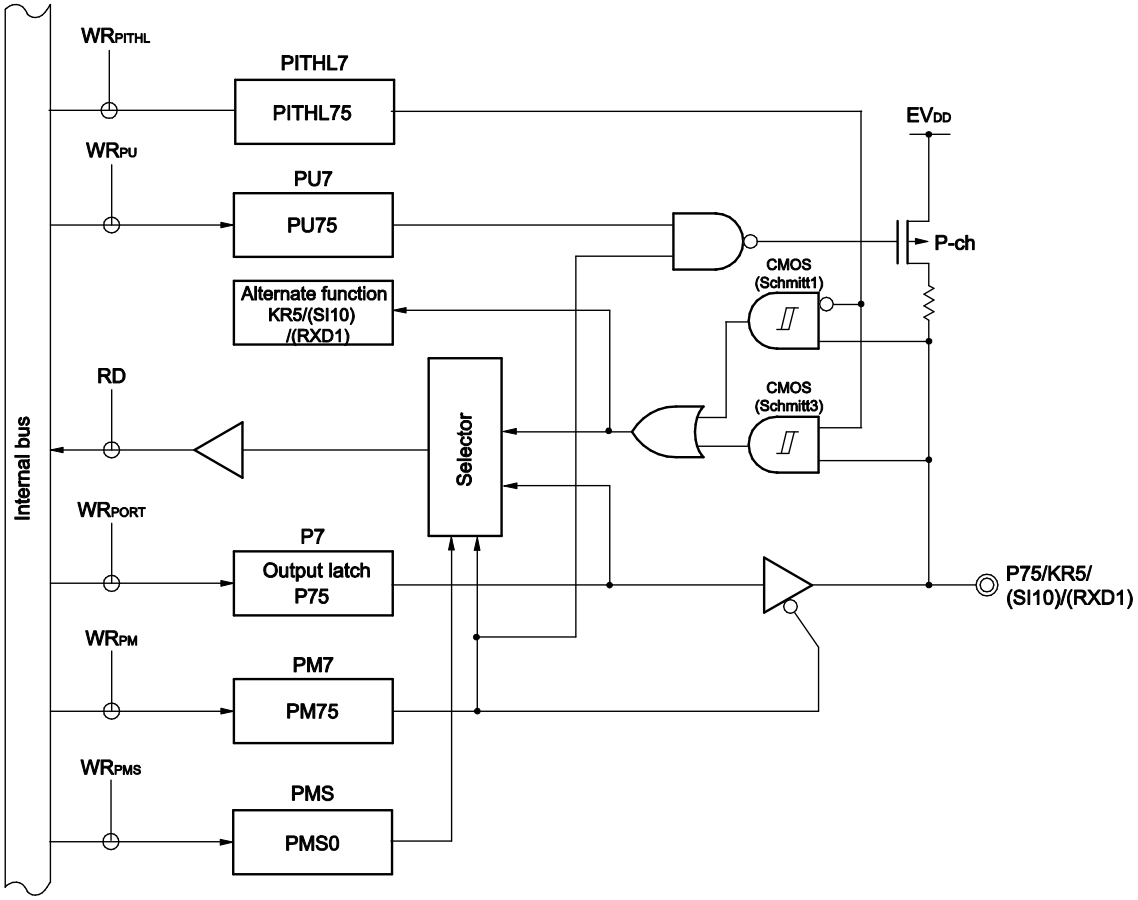

P7: Port register 7
PU7: Pull-up resistor option register 7
PM7: Port mode register 7
PMS: Port mode select register
PITHL7: Port input threshold control register 7
RD: Read signal
WRxx: Write signal

Figure 4-47. Block Diagram of P76

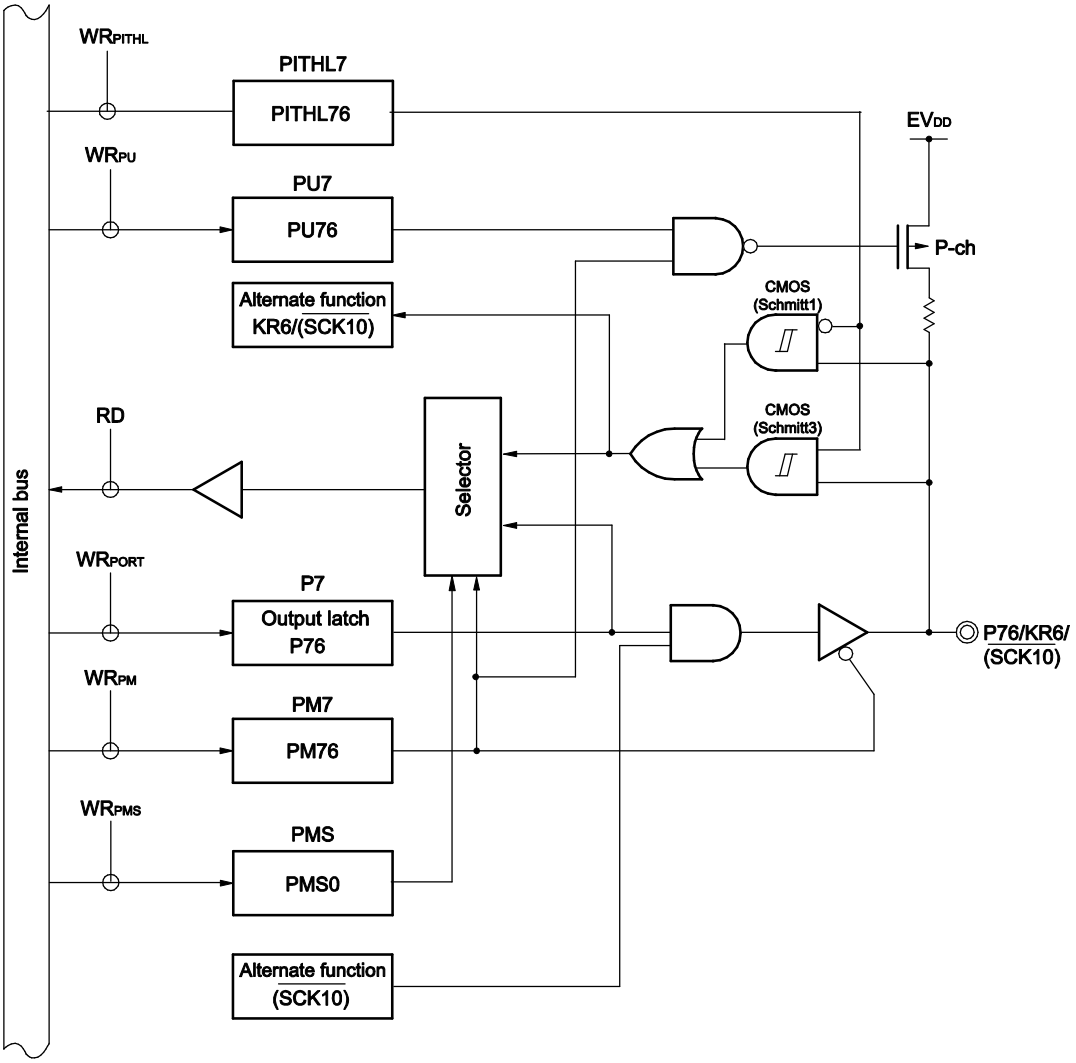

P7: Port register 7
PU7: Pull-up resistor option register 7
PM7: Port mode register 7
PMS: Port mode select register
PITHL7: Port input threshold control register 7
RD: Read signal
WRxx: Write signal

Figure 4-48. Block Diagram of P77

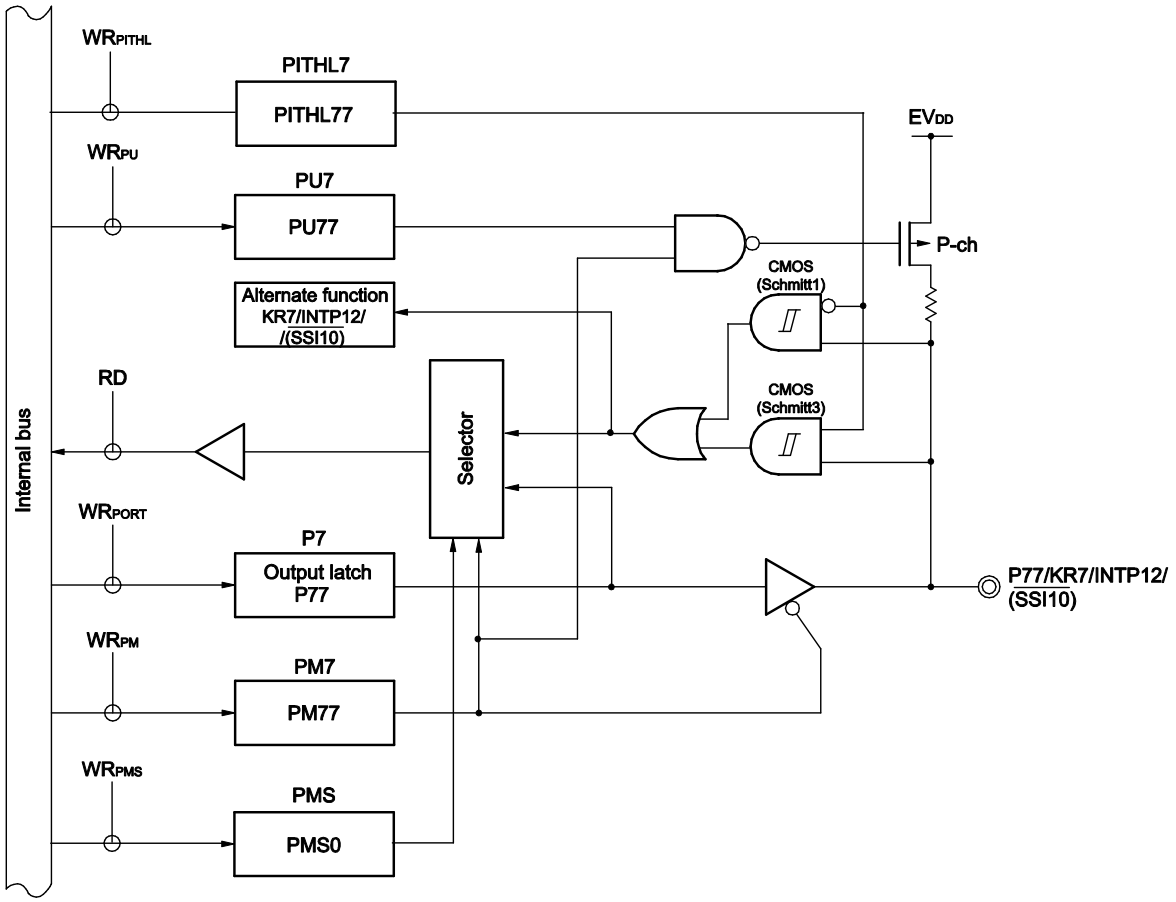

P7: Port register 7
PU7: Pull-up resistor option register 7
PM7: Port mode register 7
PMS: Port mode select register
PITHL7: Port input threshold control register 7
RD: Read signal
WRxx: Write signal

4.2.8 Port 8

Port 8 is an I/O port with an output latch. Port 8 can be set to the input mode or output mode in 1-bit units using port mode register 8 (PM8).

This port can also be used for analog input for A/D converter.

P80 to P85 can also be used for D/A converter output, and analog voltage input and reference voltage input for comparator.

To use P80/ANI2 to P87/ANI9 as digital input pins, set them in the digital I/O mode by using the A/D port configuration register (ADPC) and in the input mode by using the PM8 register. Use these pins starting from the upper bit.

To use P80/ANI2 to P87/ANI9 as digital output pins, set them in the digital I/O mode by using the A/D port configuration register (ADPC) and in the output mode by using the PM8 register. Use these pins starting from the upper bit.

To use P80/ANI2 to P87/ANI9 as analog input pins, set them in the analog I/O mode by using the A/D port configuration register (ADPC) and in the input mode by using the PM8 register. Use these pins starting from the lower bit.

Table 4-13. Settings of Registers When Using Port 8

Pin Name		PM8x	ADPC	Alternate Function Setting	Remark
Name	I/O				
P8n	Input	1	03 to n+3H	–	To use P8n as a port, use these pins from the upper bit.
	Output	0	03 to n+3H		

Remarks 1. PM8x: Port mode register 8
ADPC: A/D port configuration register

2. n = 0 to 7

Table 4-14. Setting Functions of P80/ANI2/ANO0 Pin

ADPC Register	PM8 Register	DAM Register	DAM2 Register	ADS Register	Functions of ANO0/ANI2/P80 Pin
Digital I/O	Input mode	—	Enables analog output	—	Setting prohibited
			Disables analog output		Digital input
	Output mode	—	Enables analog output	—	Setting prohibited
<R>			Disables analog output		Digital output
Analog I/O	Input mode	Enables D/A conversion operation	Enables analog output	Selects ANI	Setting prohibited
				Does not selects ANI	Analog output (D/A conversion output)
			Disables analog output	Selects ANI	Analog input (to be converted)
				Does not selects ANI	Analog input (not to be converted) Note
		Stops D/A conversion operation	Enables analog output	Selects ANI	Setting prohibited
				Does not selects ANI	Setting prohibited
			Disables analog output	Selects ANI	Analog input (to be converted)
				Does not selects ANI	Analog input (not to be converted)
	Output mode	—	—	—	Setting prohibited

Note This is a setting that the D/A converter is used for internal reference voltage of comparator. In this case, set CVRS1, CVRS0 bits of CMPSEL register to 10b (internal reference voltage (DAC output) is selected).

Table 4-15. Setting Functions of P81/ANI3 to P87/ANI9 Pins

ADPC Register	PM8 Register	ADS Register	P81/ANI3 to P87/ANI9 Pins
Digital I/O selection	Input mode	—	Digital input
	Output mode	—	Digital output
Analog input selection	Input mode	Selects ANI.	Analog input (to be converted)
		Does not select ANI.	Analog input (not to be converted)
	Output mode	Selects ANI.	Setting prohibited
		Does not select ANI.	

Reset signal generation sets P80/ANI3 to P87/ANI9 to analog input mode.

Figures 4-49 to 4-56 show block diagrams of port 8 for 100-pin products.

Figure 4-49. Block Diagram of P80

<R>

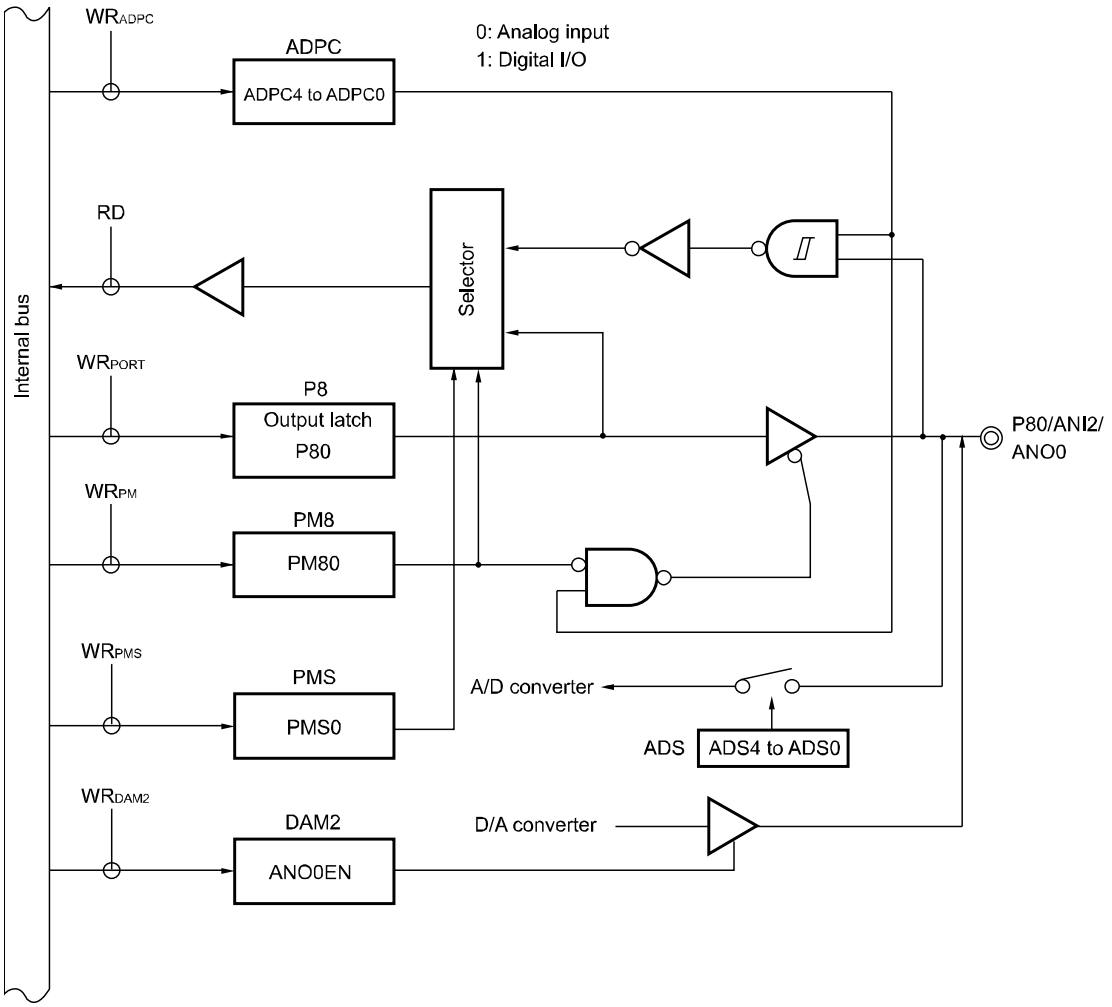

P8: Port register 8
PM8: Port mode register 8
PMS: Port mode select register
ADPC: A/D port configuration register
DAM2: D/A converter mode register 2
ADS: Analog input channel specification register
RD: Read signal
WRxx: Write signal

Figure 4-50. Block Diagram of P81

<R>

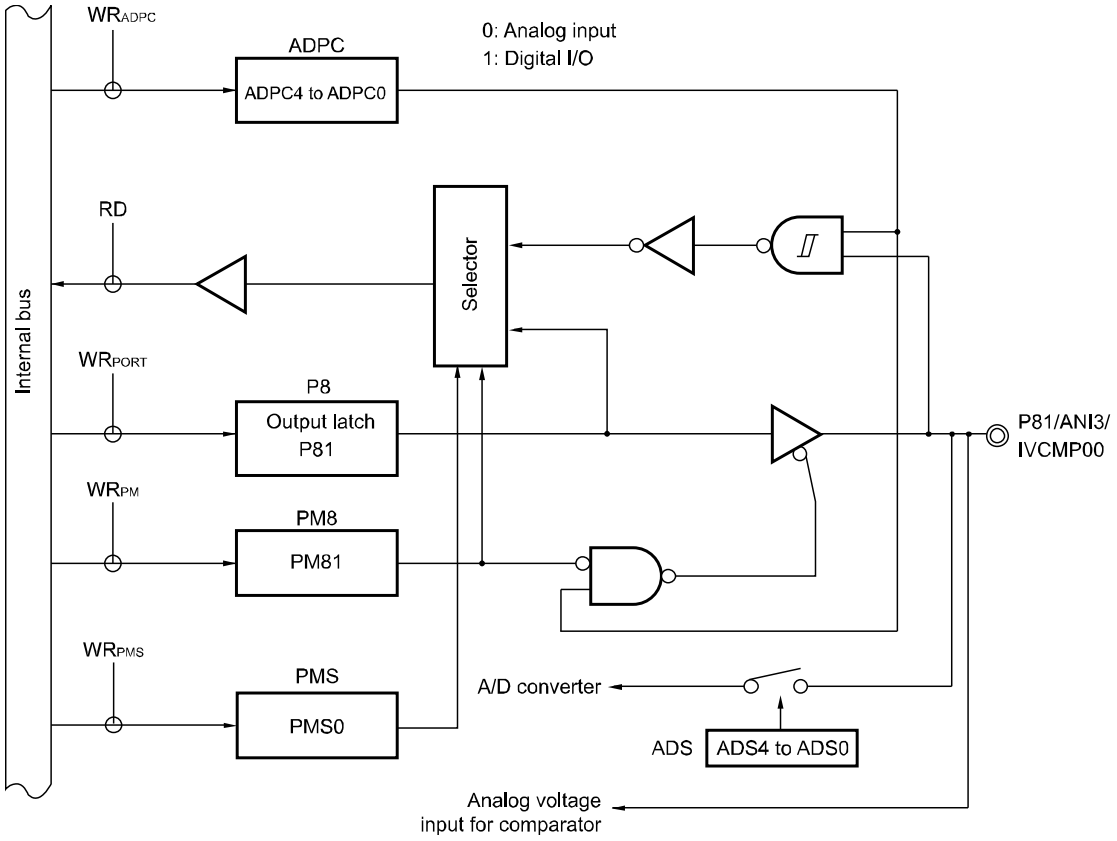

P8: Port register 8
PM8: Port mode register 8
PMS: Port mode select register
ADPC: A/D port configuration register
ADS: Analog input channel specification register
RD: Read signal
WRxx: Write signal

Figure 4-51. Block Diagram of P82

<R>

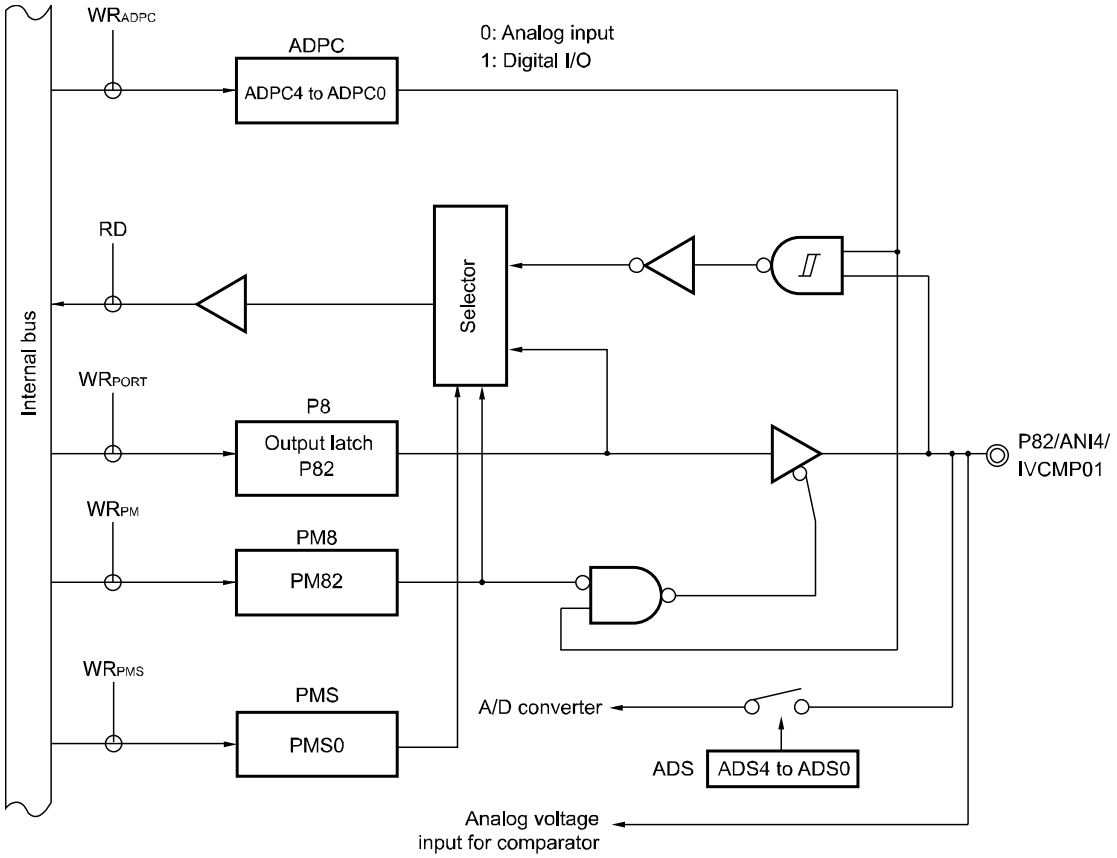

P8: Port register 8
PM8: Port mode register 8
PMS: Port mode select register
ADPC: A/D port configuration register
ADS: Analog input channel specification register
RD: Read signal
WRxx: Write signal

Figure 4-52. Block Diagram of P83

<R>

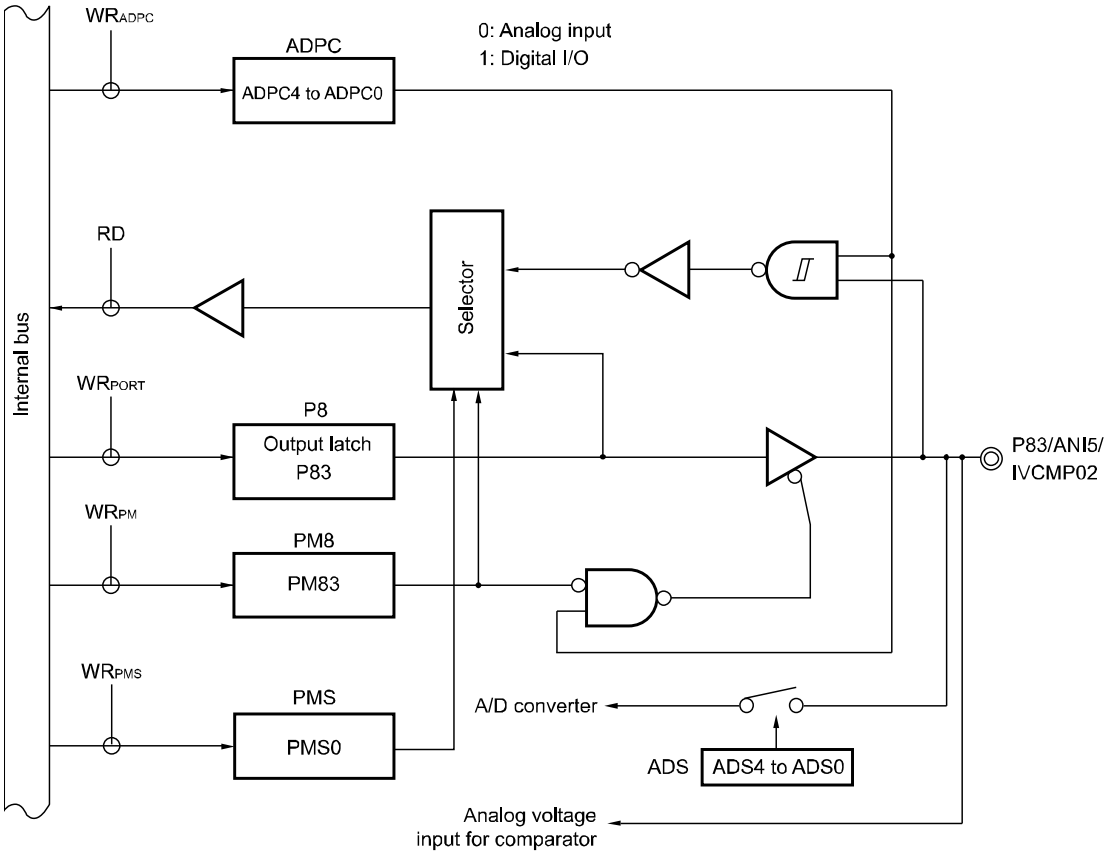

P8: Port register 8
PM8: Port mode register 8
PMS: Port mode select register
ADPC: A/D port configuration register
ADS: Analog input channel specification register
RD: Read signal
WRxx: Write signal

Figure 4-53. Block Diagram of P84

<R>

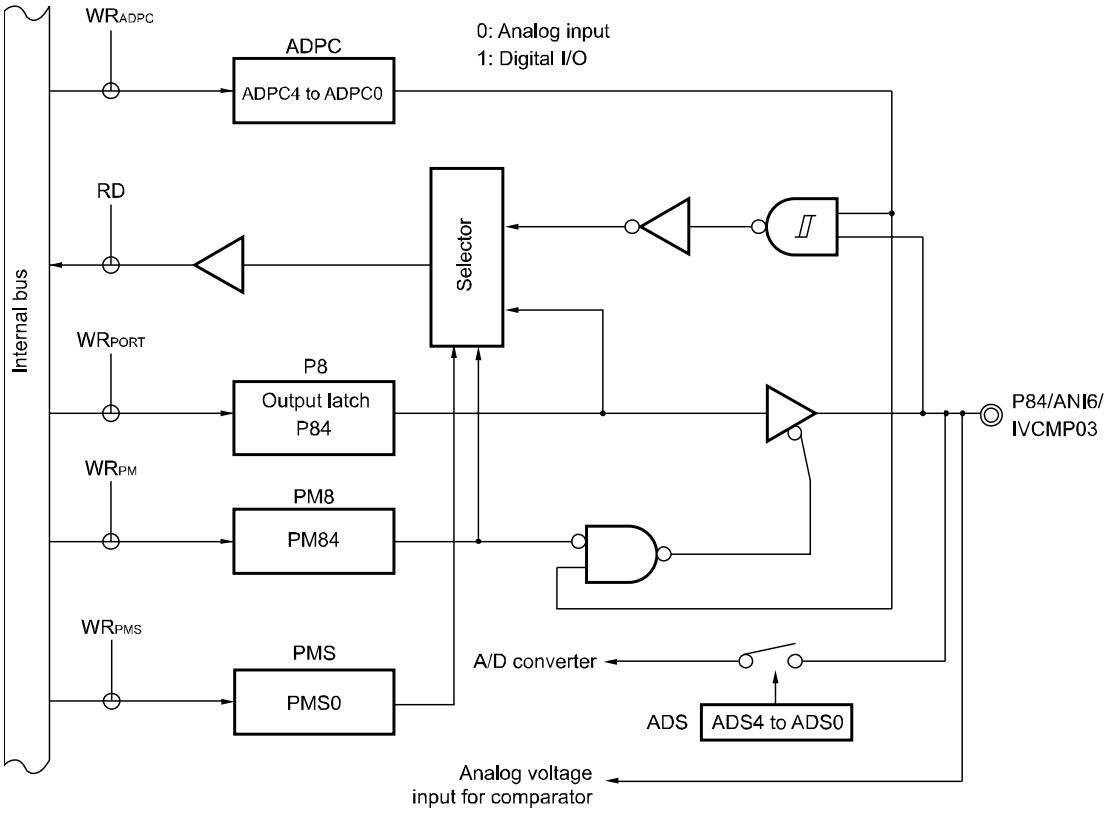

P8: Port register 8
PM8: Port mode register 8
PMS: Port mode select register
ADPC: A/D port configuration register
ADS: Analog input channel specification register
RD: Read signal
WRxx: Write signal

Figure 4-54. Block Diagram of P85

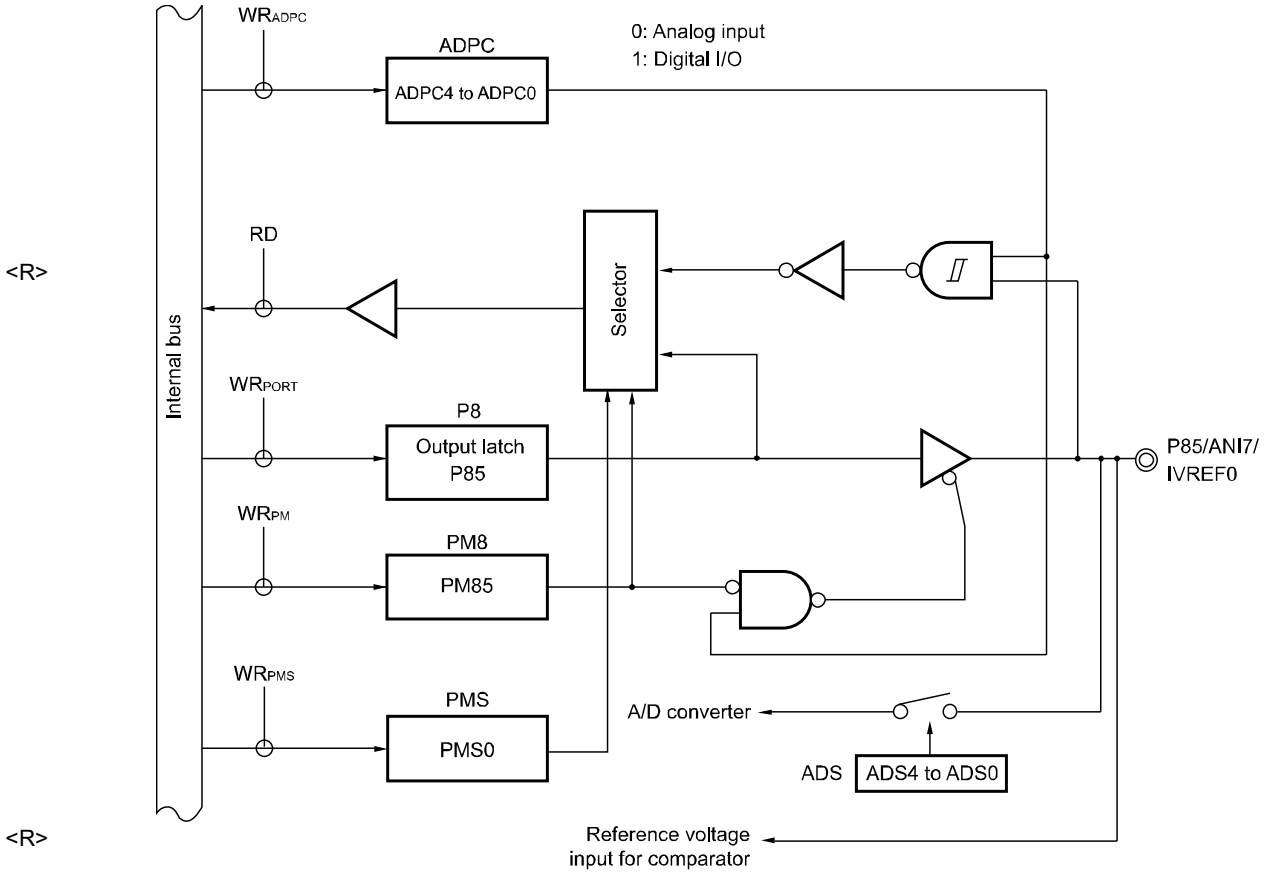

P8: Port register 8
PM8: Port mode register 8
PMS: Port mode select register
ADPC: A/D port configuration register
ADS: Analog input channel specification register
RD: Read signal
WRxx: Write signal

Figure 4-55. Block Diagram of P86

<R>

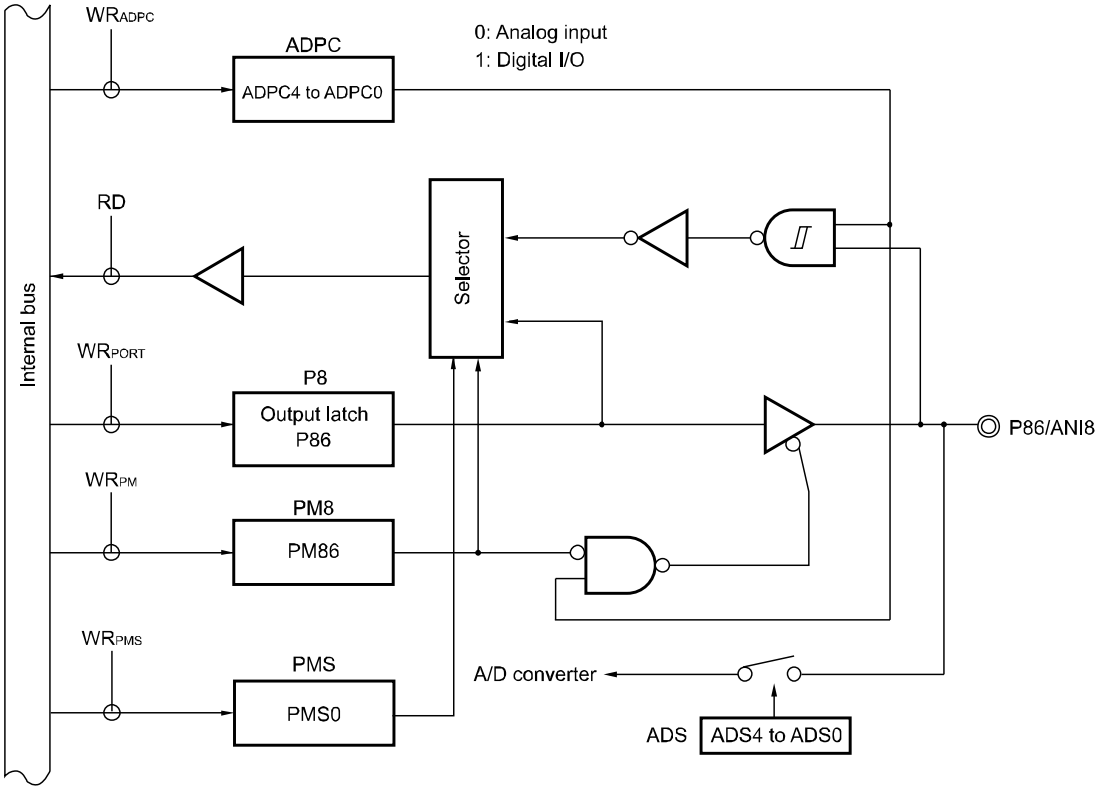

P8: Port register 8
PM8: Port mode register 8
PMS: Port mode select register
ADPC: A/D port configuration register
ADS: Analog input channel specification register
RD: Read signal
WRxx: Write signal

Figure 4-56. Block Diagram of P87

<R>

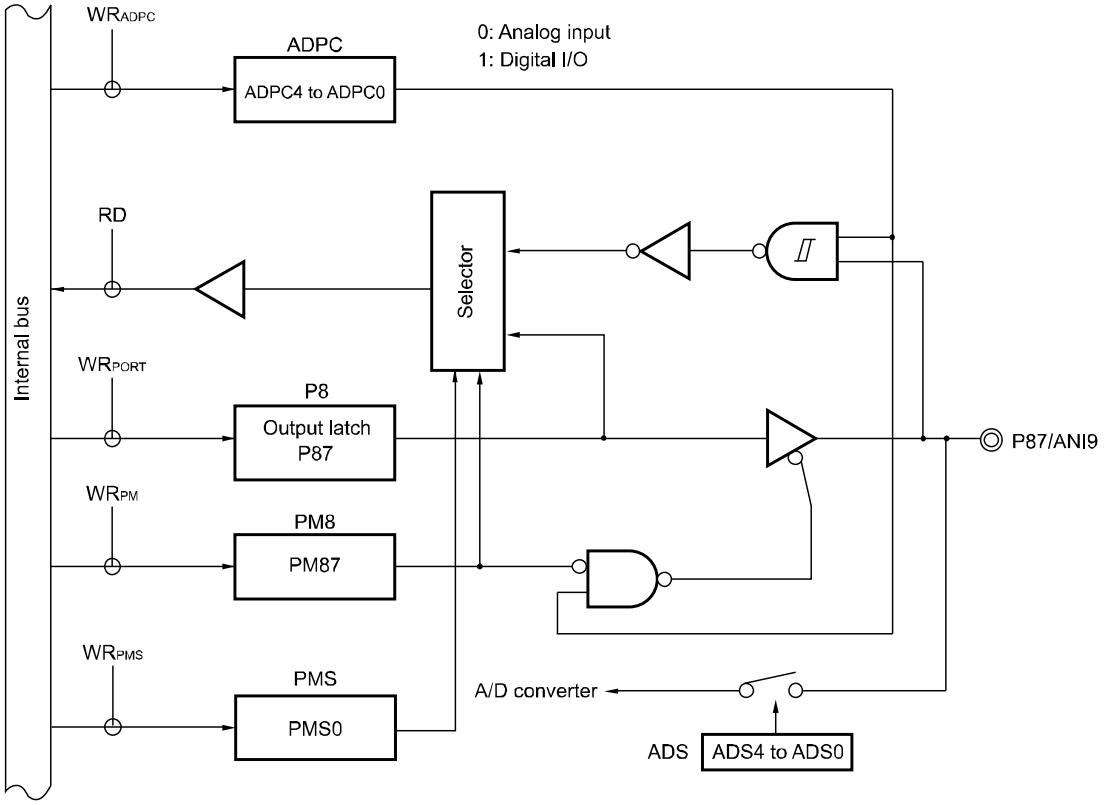

P8: Port register 8
PM8: Port mode register 8
PMS: Port mode select register
ADPC: A/D port configuration register
ADS: Analog input channel specification register
RD: Read signal
WRxx: Write signal

4.2.9 Port 9

Port 9 is an I/O port with an output latch. Port 9 can be set to the input mode or output mode in 1-bit units using port mode register 9 (PM9).

This port can also be used for A/D converter analog input.

To use P90/ANI10 to P97/ANI17 as digital input pins, set them in the digital I/O mode by using the A/D port configuration register (ADPC) and in the input mode by using the PM9 register. Use these pins starting from the upper bit.

To use P90/ANI10 to P97/ANI17 as digital output pins, set them in the digital I/O mode by using the A/D port configuration register (ADPC) and in the output mode by using the PM9 register. Use these pins starting from the upper bit.

To use P90/ANI10 to P97/ANI17 as analog input pins, set them in the analog input mode by using the A/D port configuration register (ADPC) and in the input mode by using the PM9 register. Use these pins starting from the lower bit.

Reset signal generation sets this port to analog input mode.

Table 4-16. Settings of Registers When Using Port 9

Pin Name		PM9x	Alternate Function Setting	Remark
Name	I/O			
P90	Input	1	×	
	Output	0	×	
P91	Input	1	×	
	Output	0	×	
P92	Input	1	×	
	Output	0	×	
P93	Input	1	×	
	Output	0	×	
P94	Input	1	×	
	Output	0	×	
P95	Input	1	×	
	Output	0	×	
P96	Input	1	×	
	Output	0	×	
P97	Input	1	×	
	Output	0	×	

Remark ×: Don't care
PM9x: Port mode register 9

Table 4-17. Settings of Registers When Using Port 9

Pin Name		PM9x	ADPC	Alternate Function Setting	Remark
Name	I/O				
P9n	Input	1	0C to n+0CH	—	To use P9n as a port, use these pins from the upper bit.
	Output	0	0C to n+0CH		

Remarks 1. PM9x: Port mode register 9
ADPC: A/D port configuration register
2. n = 0 to 7

Table 4-18. Setting Functions of P90/ANI10 to P97/ANI17 Pins

ADPC Register	PM9 Register	ADS Register	P90/ANI10 to P97/ANI17 Pins
Digital I/O selection	Input mode	—	Digital input
	Output mode	—	Digital output
Analog input selection	Input mode	Selects ANI.	Analog input (to be converted)
		Does not select ANI.	Analog input (not to be converted)
	Output mode	Selects ANI.	Setting prohibited
		Does not select ANI.	

Reset signal generation sets P90/ANI10 to P97/ANI17 to analog input mode.

Figure 4-57 shows a block diagram of port 9 for 100-pin products.

Figure 4-57. Block Diagram of P90 to P97

<R>

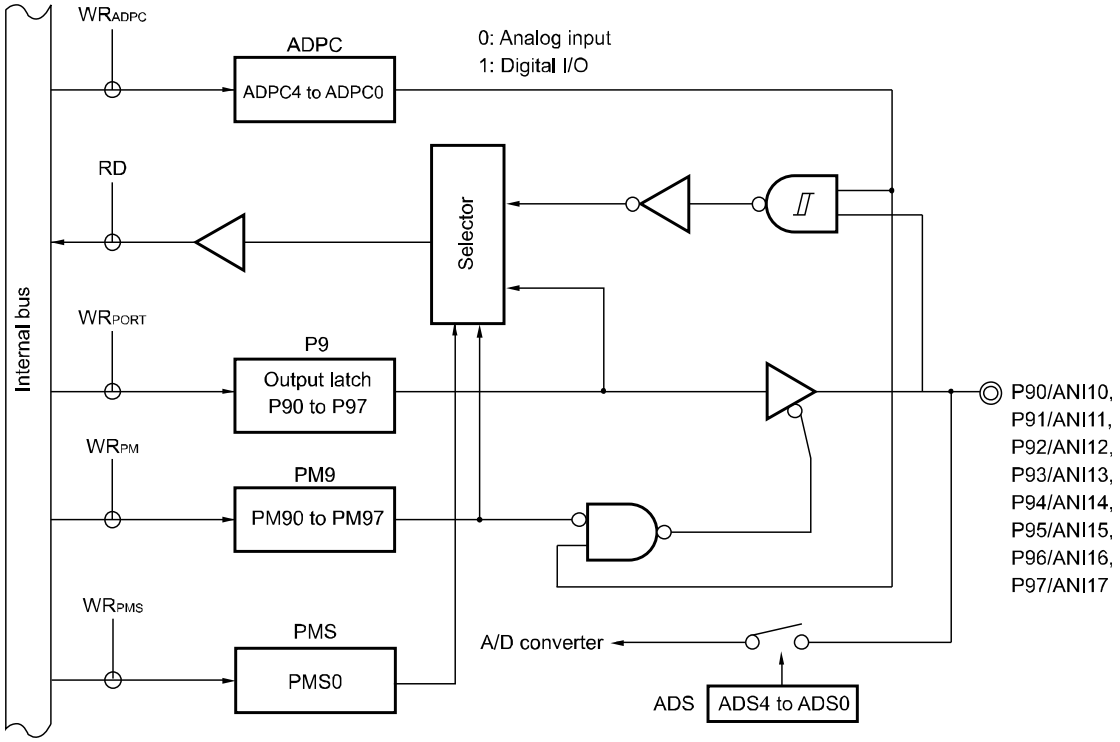

P9: Port register 9
PM9: Port mode register 9
PMS: Port mode select register
ADPC: A/D port configuration register
ADS: Analog input channel specification register
RD: Read signal
WRxx: Write signal

4.2.10 Port 10

Port 10 is an I/O port with an output latch. Port 10 can be set to the input mode or output mode in 1-bit units using port mode register 10 (PM10).

When the P106 and P107 pins are used as an input port, use of an on-chip pull-up resistor can be specified in 1-bit units by pull-up resistor option register 10 (PU10). For the P107 pin input, the threshold of the input buffer can be specified in 1-bit units using the port input threshold control register 10 (PITHL10).

This port can also be used for A/D converter analog input and LIN serial data I/O.

To use P100/ANI18 to P105/ANI23 as digital input pins, set them in the digital I/O mode by using the A/D port configuration register (ADPC) and in the input mode by using the PM10 register. Use these pins starting from the upper bit.

Reset signal generation sets this port to input mode.

To use P100/ANI18 to P105/ANI23 as digital output pins, set them in the digital I/O mode by using the A/D port configuration register (ADPC) and in the output mode by using the PM10 register. Use these pins starting from the upper bit.

To use P100/ANI18 to P105/ANI23 as analog input pins, set them in the analog input mode by using the A/D port configuration register (ADPC) and in the input mode by using the PM10 register. Use these pins starting from the lower bit.

<R> Reset signal generation sets P100 to P105 to analog input mode and P106 to P107 to input mode.

Table 4-19. Settings of Registers When Using Port 10

Pin Name		PM10x	PITHL10x	Alternate Function Setting Note 2	Remark
Name	I/O				
P100 Note 3	Input	1	—	×	
	Output	0	—	×	
P101 Note 3	Input	1	—	×	
	Output	0	—	×	
P102 Note 3	Input	1	—	×	
	Output	0	—	×	
P103 Note 3	Input	1	—	×	
	Output	0	—	×	
P104 Note 3	Input	1	—	×	
	Output	0	—	×	
P105 Note 3	Input	1	—	×	
	Output	0	—	×	
P106	Input	1	—	×	
	Output	0	—	(LTXD1 output = 1) Note 1	
P107	Input	1	0	×	CMOS input (Schmitt1 input)
			1	×	CMOS input (Schmitt3 input)
	Output	0	×	×	

Notes 1. When a pin sharing the serial data output function of the LIN is to be used as a general-purpose port pin, operation of the corresponding LIN must be stopped.

2. Functions in parentheses can be assigned via settings in the peripheral I/O redirection register 4 (PIOR4).

3. These are the settings of registers in the case where setting of the A/D port configuration register (ADPC) is to select “D” (digital I/O) for the target pin. See Table 4-20 when using this pin as an analog input.

Remark ×: Don't care
PM10x: Port mode register 10
PITHL10x: Port input threshold control register 10

Table 4-20. Settings of Registers When Using Pins of Port 10 as Analog Inputs

Pin Name		PM10x	ADPC	Alternate Function Setting	Remark
Name	I/O				
P10n	Input	1	14 to n + 14H (n = 0 to 4), 00H (n = 5)	—	To use P10n as an analog input, use these pins from the lower bit.

Remarks 1. PM10x: Port mode register 9
ADPC: A/D port configuration register
2. n = 0 to 5

Table 4-21. Setting Functions of P100/ANI18 to P105/ANI23 Pins

ADPC Register	PM10 Register	ADS Register	P100/ANI18 to P105/ANI23 Pins
Digital I/O selection	Input mode	—	Digital input
	Output mode	—	Digital output
Analog input selection	Input mode	Selects ANI.	Analog input (to be converted)
		Does not select ANI.	Analog input (not to be converted)
	Output mode	Selects ANI.	Setting prohibited
		Does not select ANI.	

Reset signal generation sets P100/ANI18 to P105/ANI23 to analog input mode.

Figures 4-58 to 4-60 show block diagrams of port 10 for 100-pin products.

Figure 4-58. Block Diagram of P100 to P105

<R>

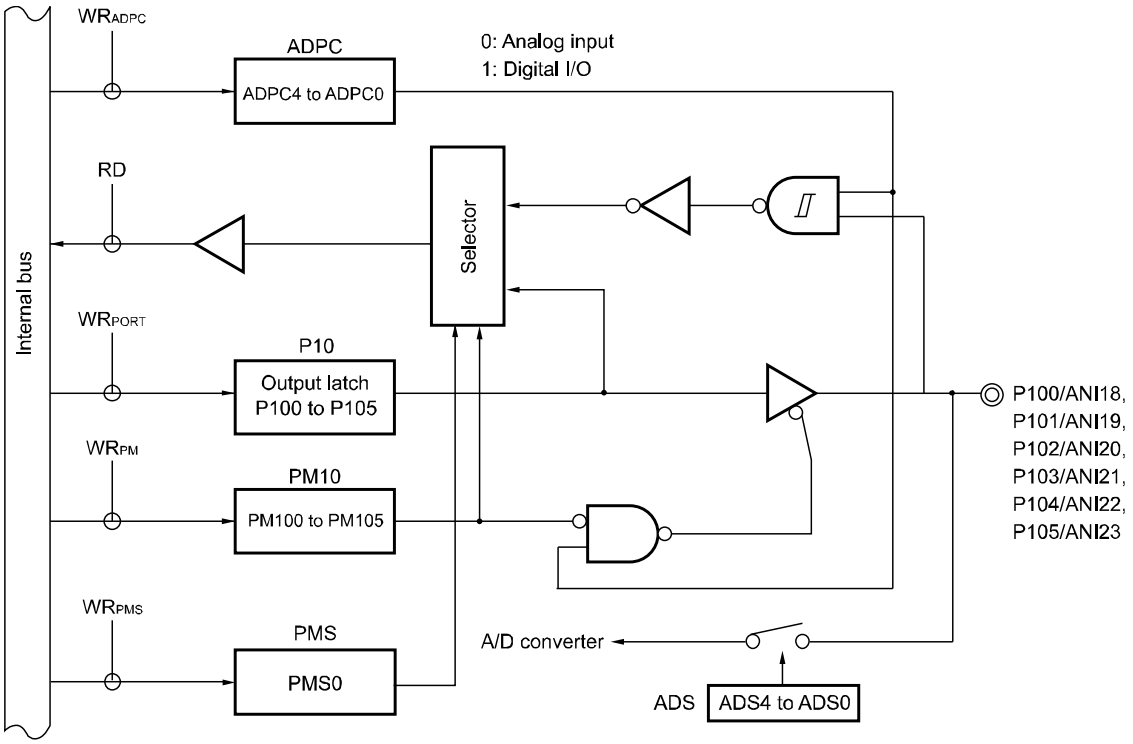

P10: Port register 10
PM10: Port mode register 10
PMS: Port mode select register
ADPC: A/D port configuration register
ADS: Analog input channel specification register
RD: Read signal
WRxx: Write signal

Figure 4-59. Block Diagram of P106

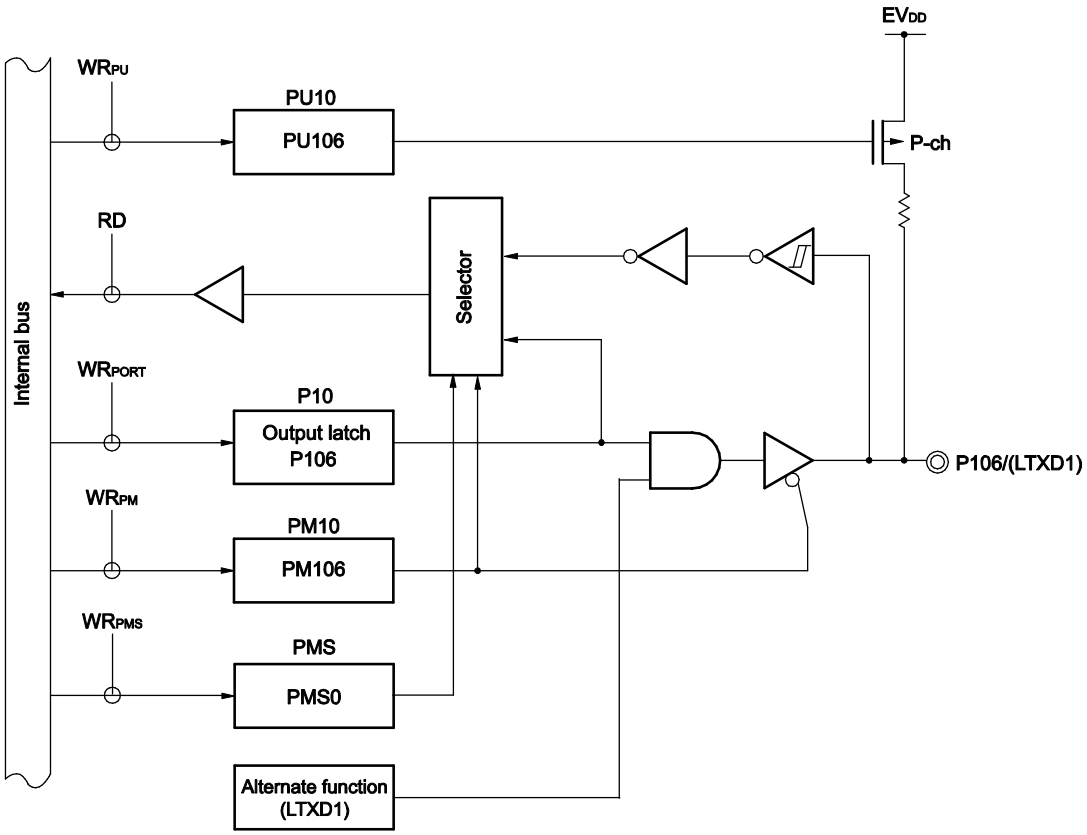

P10: Port register 10
PM10: Port mode register 10
PMS: Port mode select register
PU10: Pull-up resistor option register 10
RD: Read signal
WRxx: Write signal

Figure 4-60. Block Diagram of P107

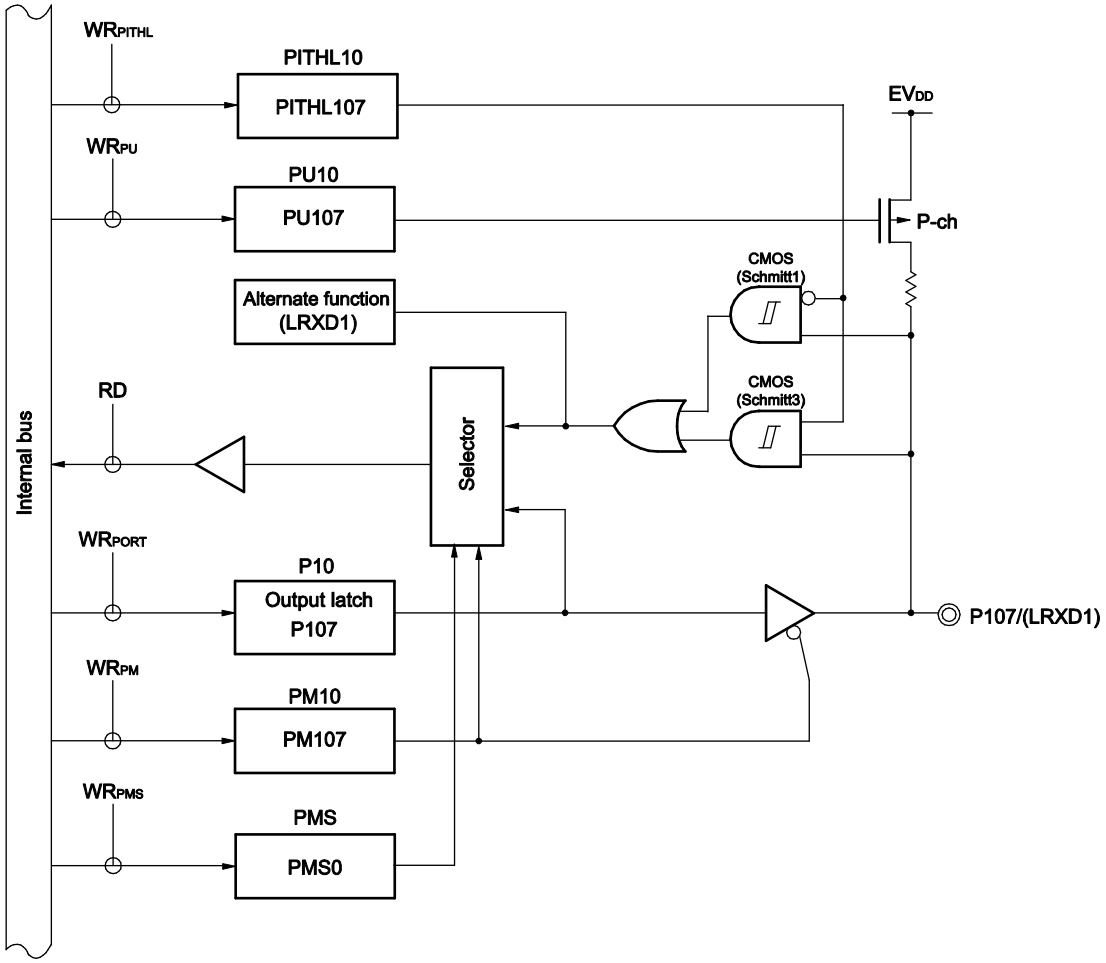

P10: Port register 10
PM10: Port mode register 10
PMS: Port mode select register
PITHL10: Port input threshold control register 10
PU10: Pull-up resistor option register 10
RD: Read signal
WRxx: Write signal

4.2.11 Port 12

P120 and P125 to P127 are I/O ports with an output latch. Port 12 can be set to the input mode or output mode in 1-bit units using port mode register 12 (PM12). When the P120 and P125 to P127 pins are used as an input port, use of an on-chip pull-up resistor can be specified by pull-up resistor option register 12 (PU12).

Input to the P125 pin can be specified through a normal input buffer or a TTL input buffer in 1-bit units using port input mode register 12 (PIM12). For the P125 pin input, the threshold of the input buffer can be specified in 1-bit units using the port input threshold control register 12 (PITHL12).

Output from the P120 pin can be specified as N-ch open-drain output (EV_{DD} tolerance) in 1-bit units using port output mode register 12 (POM12).

When P120 and P125 are used as input pins, specify analog input or digital input in 1-bit units using port mode control register 12 (PMC12).

This port can also be used for A/D converter analog input, resonator connection for main system clock, resonator connection for subsystem clock, external clock input for main system clock, external clock input for subsystem clock, timer I/O, serial interface data output, slave select input, external interrupt request input, and SNOOZE status output.

Reset signal generation sets P120 and P125 to analog input mode and P121 to P124 to input mode.

Table 4-22. Settings of Registers When Using Port 12 (1/2)

Pin Name		PM12x	PIM12x	POM12x	PMC12x	PITHL12x	Alternate Function Setting Note 5	Remark
Name	I/O							
P120	Input	1	–	×	0	–	×	
	Output	0	–	0	0	–	TRDIOD0 output = 0 Note 1	CMOS output
		0	–	1	0	–	TO07 output = 0 Note 2 SO01 output = 1 Note 3	N-ch O.D output
P121	Input	–	–	–	–	–	OSCSEL bit of CMC register = 0 or EXCLK bit = 1	
P122	Input	–	–	–	–	–	OSCSEL bit of CMC register = 0	
P123	Input	–	–	–	–	–	OSCSELS bit of CMC register = 0 or EXCLKS bit = 1 or SELLOSC bit of CKSEL register = 1	
P124	Input	–	–	–	–	–	OSCSELS bit of CMC register = 0 or SELLOSC bit of CKSEL register = 1	
P125	Input	1	0	–	0	0	×	CMOS input (Schmitt1 input)
						1		CMOS input (Schmitt3 input)
		1	1	–	0	×	×	TTL input
	Output	0	×	–	0	×	TRDIOB0 output = 0 Note 1 TO03 output = 0 Note 2 SNZOUT1 output = 0 Note 4	

(**Notes**, **Caution**, and **Remark** are listed on the next page.)

Table 4-22. Settings of Registers When Using Port 12 (2/2)

Pin Name		PM12x	PIM12x	POM12x	PMC12x	PITHL12x	Alternate Function Setting Note 5	Remark
Name	I/O							
P126	Input	1	–	–	–	–	×	
	Output	0	–	–	–	–	(TO01 output = 0) Note2	
P127	Input	1	–	–	–	–	×	
	Output	0	–	–	–	–	(TO03 output = 0) Note2	

Notes 1. When a pin sharing a timer RD function is to be used as a general-purpose port pin, the target bit for TRDIOij pin output control in the timer RD output master enable register 1 (TRDOER1) must have the same setting as its initial value (i = A, B, C, D, j = 0, 1)

2. When a pin sharing a timer output function of the timer array unit is to be used as a general-purpose port pin, the TOmn bit of the timer output register m (TOm) and the TOEmn bit of the timer output enable register m (TOEm) corresponding to the target unit and channel must have the same setting as in the initial state (m = 0, 1, n = 0 to 7).

3. When a pin sharing the serial array unit function is to be used as a general-purpose port pin, the SOmn bit of the serial output register m (SOm), the SOEmn bit of the serial output enable register m (SOEm), and the SEmn bit of the serial channel enable status register m (SEm) corresponding to the target unit and channel must have the same setting as its initial value (m = 0, 1, n = 0, 1).

4. When a pin sharing the SNOOZE status output function is to be used as a general-purpose port pin, the OUTEN0 to OUTEN7 bits of the SNOOZE status output control registers 0, 1, 2, 3 (PSNZCNT0, 1, 2, 3) must have the same setting as its initial value.

5. Functions in parentheses can be assigned via settings in the peripheral I/O redirection register 1 (PIOR1).

Caution The function setting on P121 to P124 is available only once after the reset release. The port once set for connection to a resonator or an oscillator cannot be used as an input port unless the reset is performed.

Remark ×: Don't care
PM12x: Port mode register 12
PIM12x: Port input mode register 12
POM12x: Port output mode register 12
PMC12x: Port mode control register 12
PITHL12x: Port input threshold control register 12

Figures 4-61 to 4-65 show block diagrams of port 12 for 100-pin products.

Figure 4-61. Block Diagram of P120

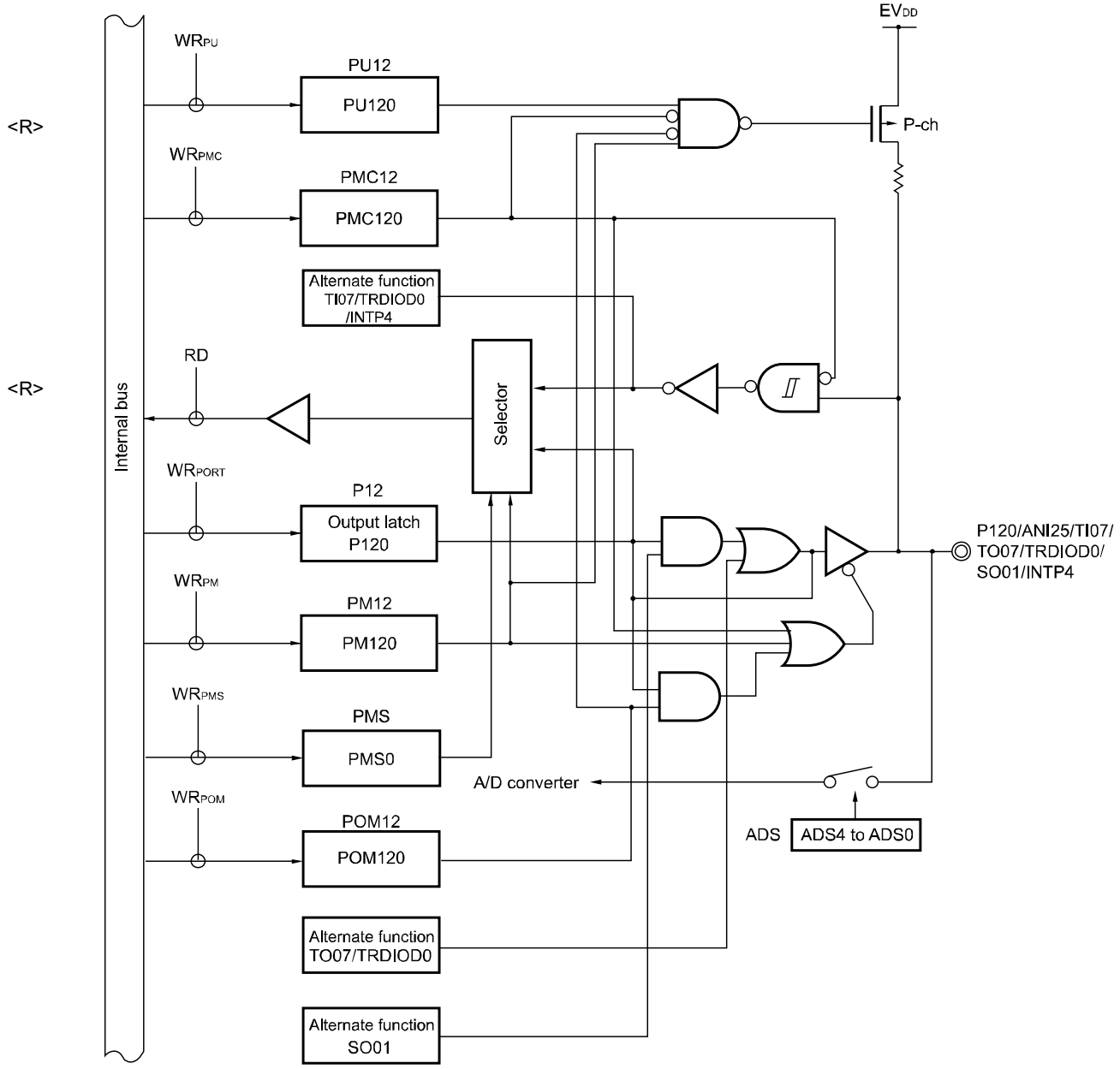

P12: Port register 12
PU12: Pull-up resistor option register 12
PM12: Port mode register 12
POM12: Port output mode register 12
PMC12: Port mode control register 12
PMS: Port mode select register
ADS: Analog input channel specification register
RD: Read signal
WRxx: Write signal

Figure 4-62. Block Diagram of P121 and P122

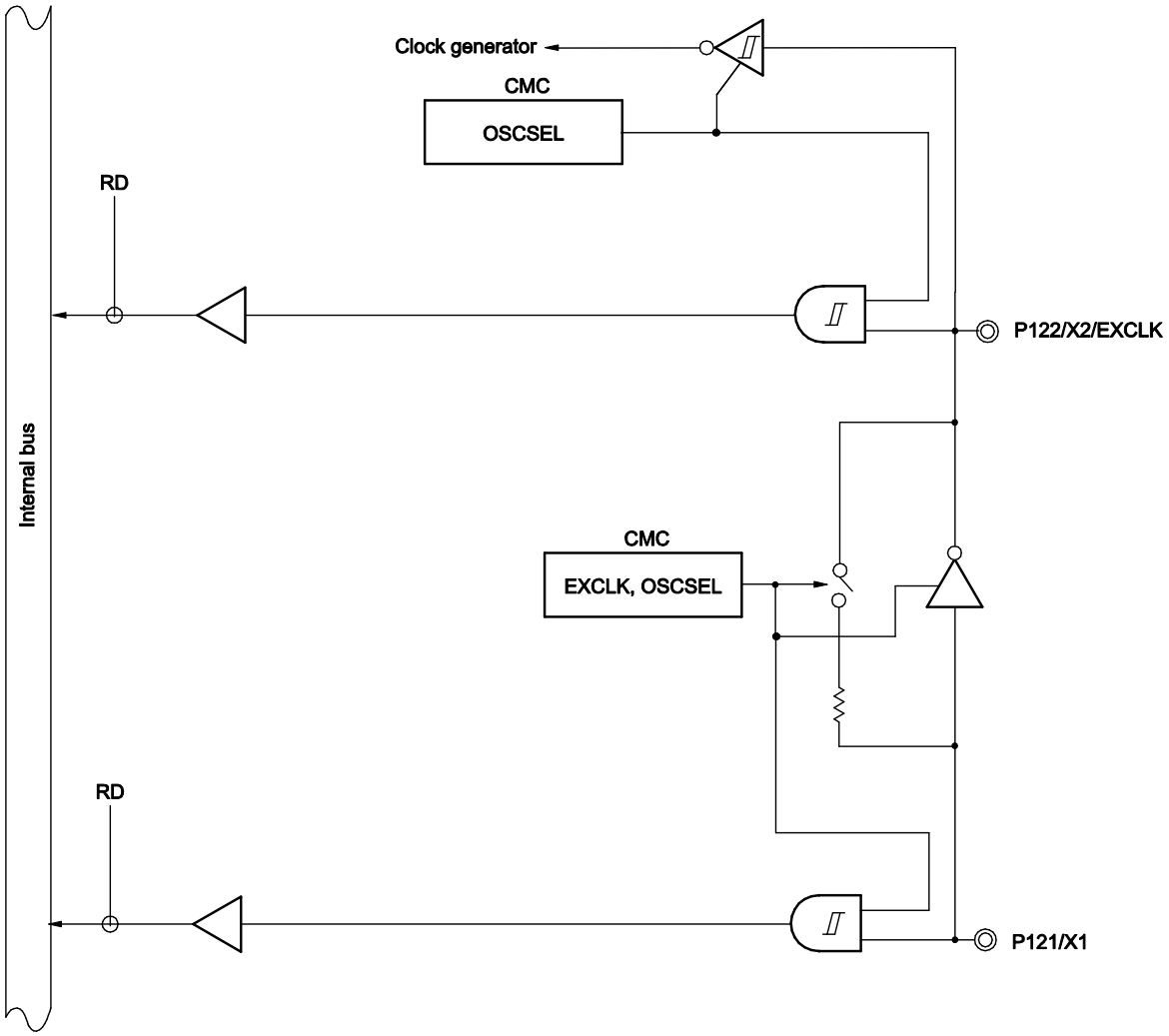

CMC: Clock operation mode control register
RD: Read signal

Figure 4-63. Block Diagram of P123 and P124

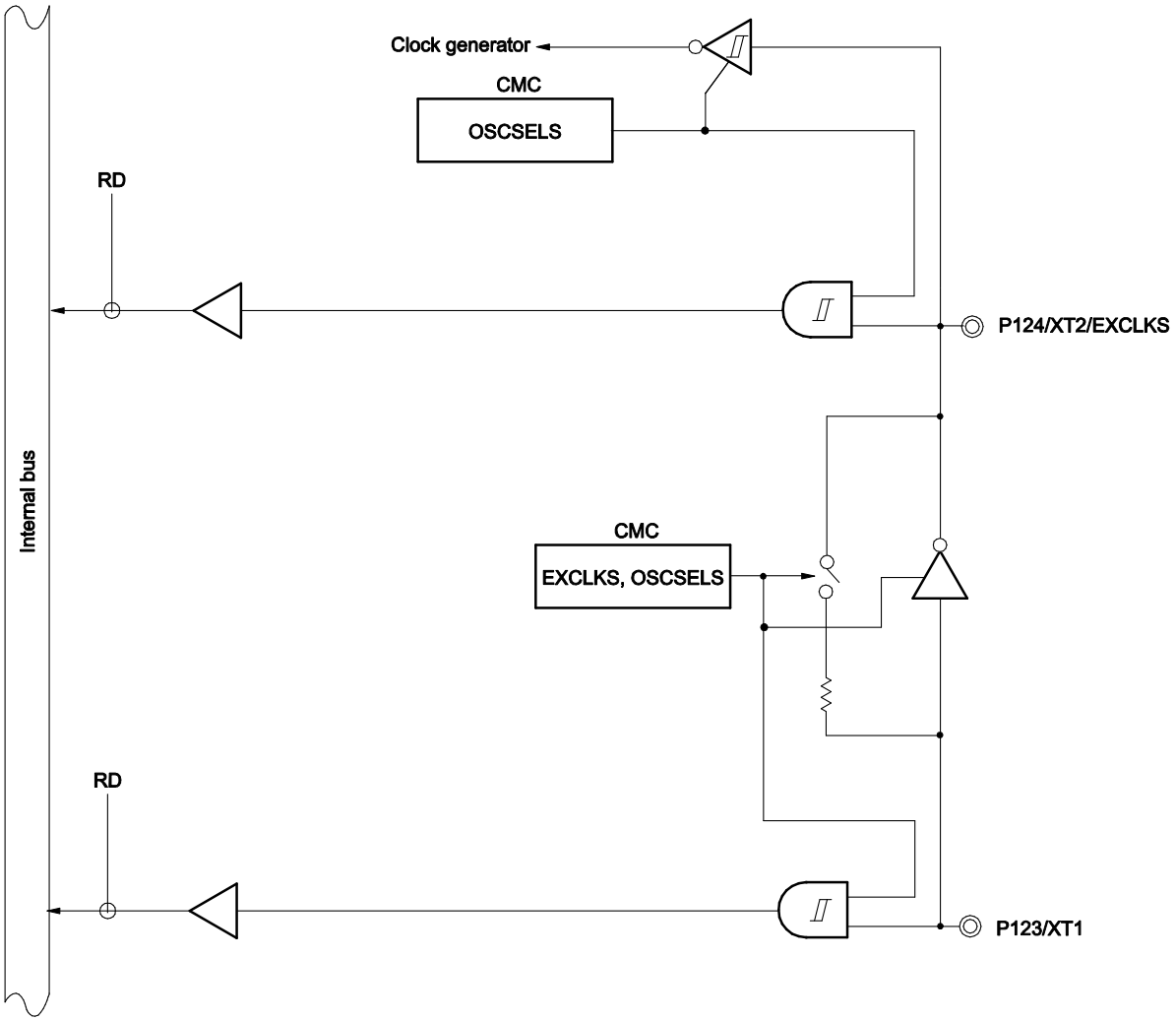

CMC: Clock operation mode control register
RD: Read signal

Figure 4-64. Block Diagram of P125

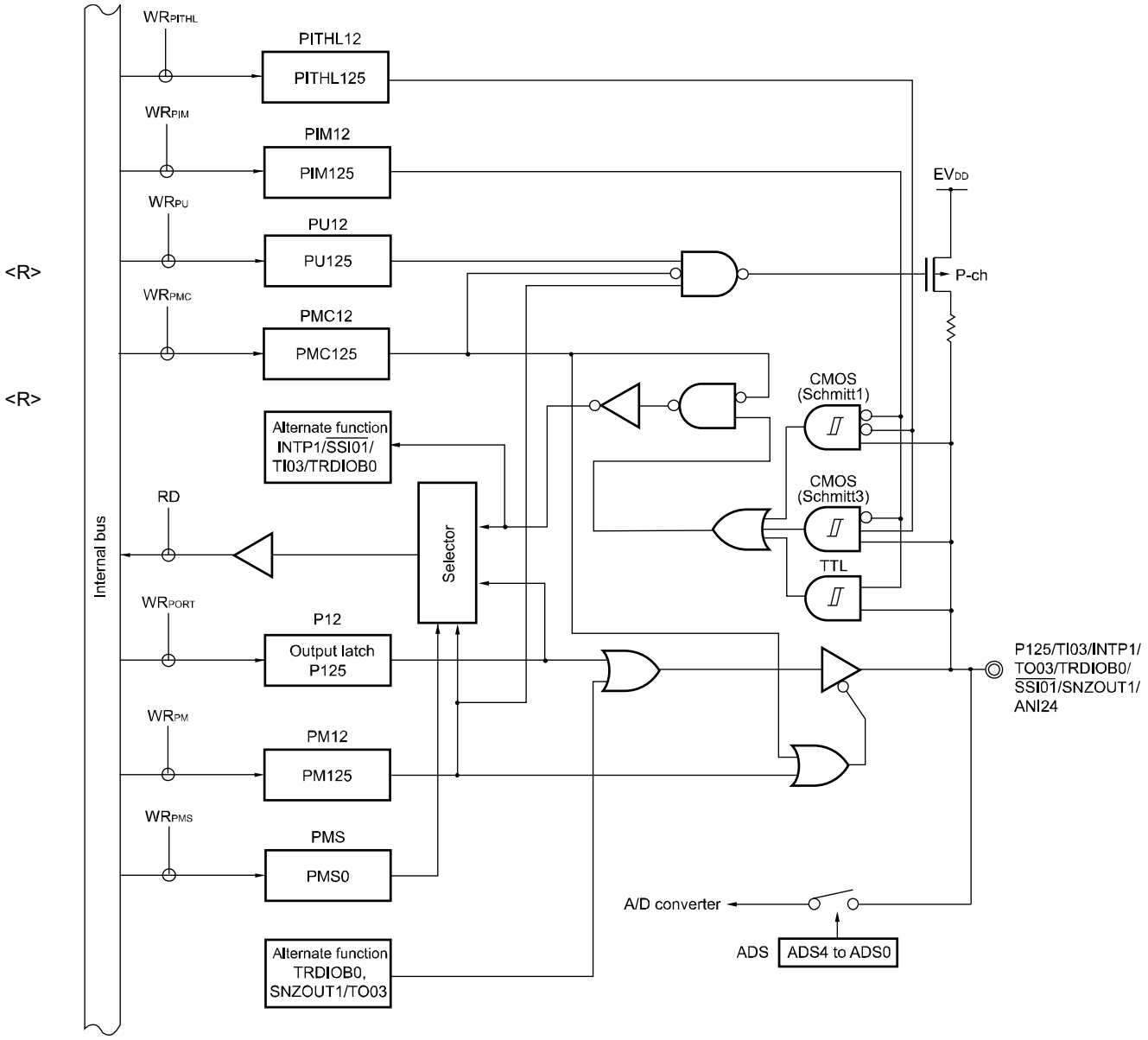

P12:	Port register 12
PU12:	Pull-up resistor option register 12
PM12:	Port mode register 12
PIM12:	Port input mode register 12
PMC12:	Port mode control register 12
PMS:	Port mode select register
PITHL12:	Port input threshold control register 12
ADS:	Analog input channel specification register
RD:	Read signal
WRxx:	Write signal

Figure 4-65. Block Diagram of P126 and P127

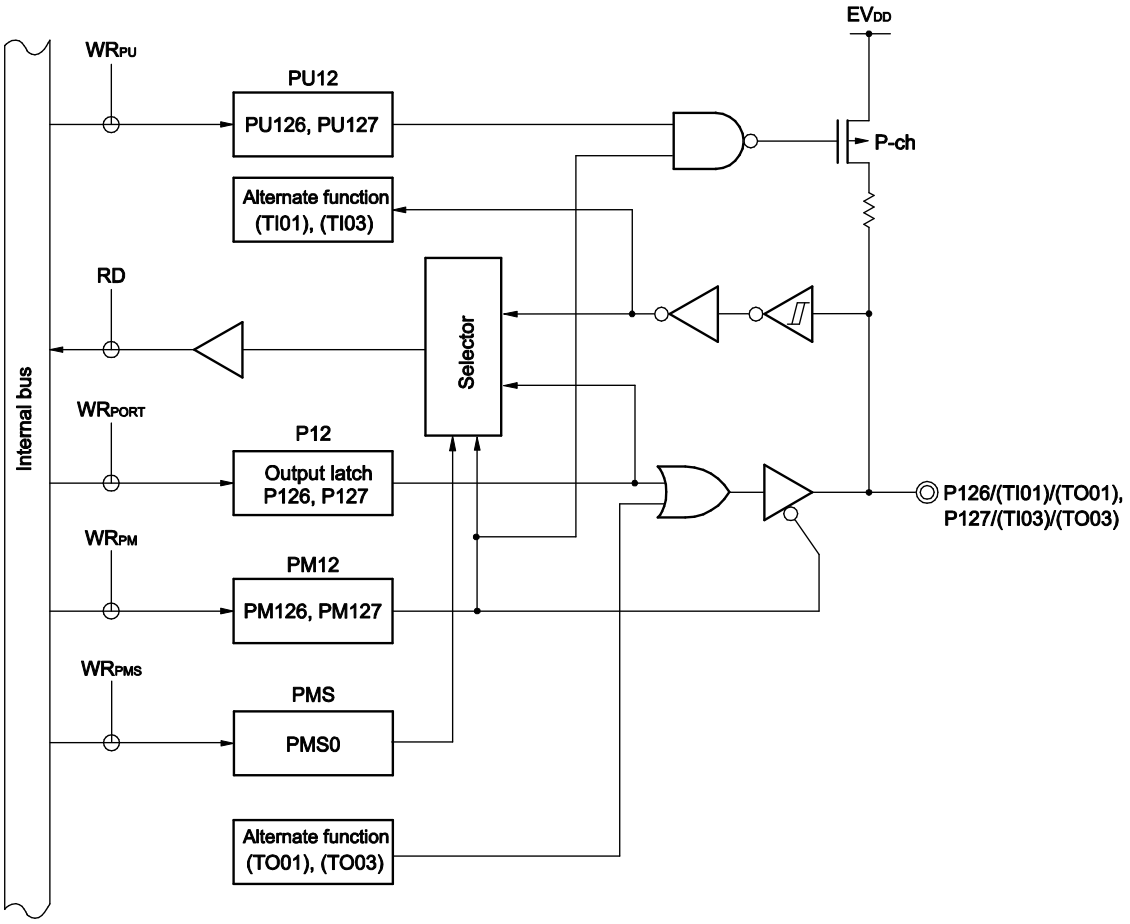

P12: Port register 12
PU12: Pull-up resistor option register 12
PM12: Port mode register 12
PMS: Port mode select register
RD: Read signal
WRxx: Write signal

4.2.12 Port 13

P130 is a 1-bit output-only port with an output latch.

P137 is a 1-bit input-only port.

P130 is fixed to output mode, and P137 is fixed to input mode.

This port can also be used for external interrupt request input and reset output.

The RESOUT output can be set by an option byte.

Table 4-23. Settings of Registers When Using Port 13

Pin Name		Alternate Function Setting	Remark
Name	I/O		
P130	Output	RESOUT	
P137	Input	×	

Figures 4-66 and 4-67 show block diagrams of port 13 for 100-pin products.

Figure 4-66. Block Diagram of P130

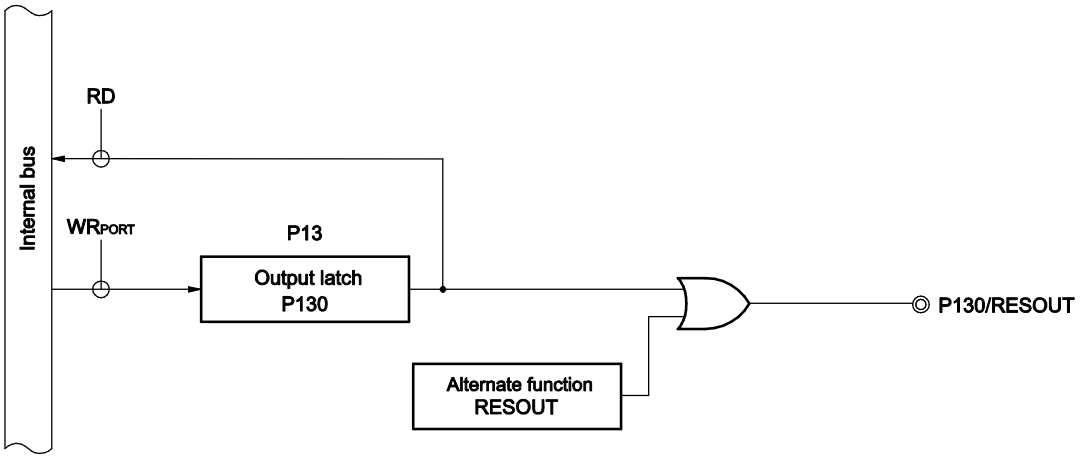

P13: Port register 13
RD: Read signal
WRxx: Write signal

Remark When reset is effected, P130 outputs a low level. If P130 is set to output a high level before reset is effected, the output signal of P130 can be dummy-output as the CPU reset signal.

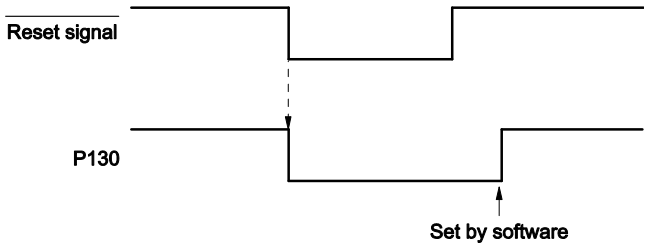

<R> **Figure 4-67. Block Diagram of P137**

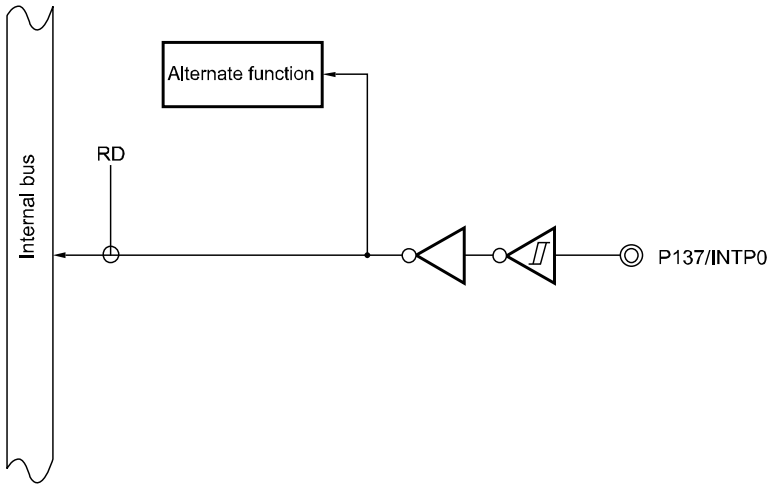

RD: Read signal

4.2.13 Port 14

Port 14 is an I/O port with an output latch. Port 14 can be set to the input mode or output mode in 1-bit units using port mode register 14 (PM14). When the P140 pin is used as an input port, use of an on-chip pull-up resistor can be specified in 1-bit units by pull-up resistor option register 14 (PU14).

This port can also be used for clock/buzzer output.

Reset signal generation sets P140 to input mode.

Table 4-24. Settings of Registers When Using Port 14

Pin Name		PM14x	Alternate Function Setting	Remark
Name	I/O			
P140	Input	1	×	
	Output	0	PCLBUZ0 output = 0 Note	

Note To use a pin multiplexed with the clock/buzzer output function as a general-purpose port, set the PCLOE0 bit in clock output select register 0 (CKS0) to the default value.

Remark ×: Don't care
PM14x: Port mode register 14

Figure 4-68 shows a block diagram of port 14 for 100-pin products.

Figure 4-68. Block Diagram of P140

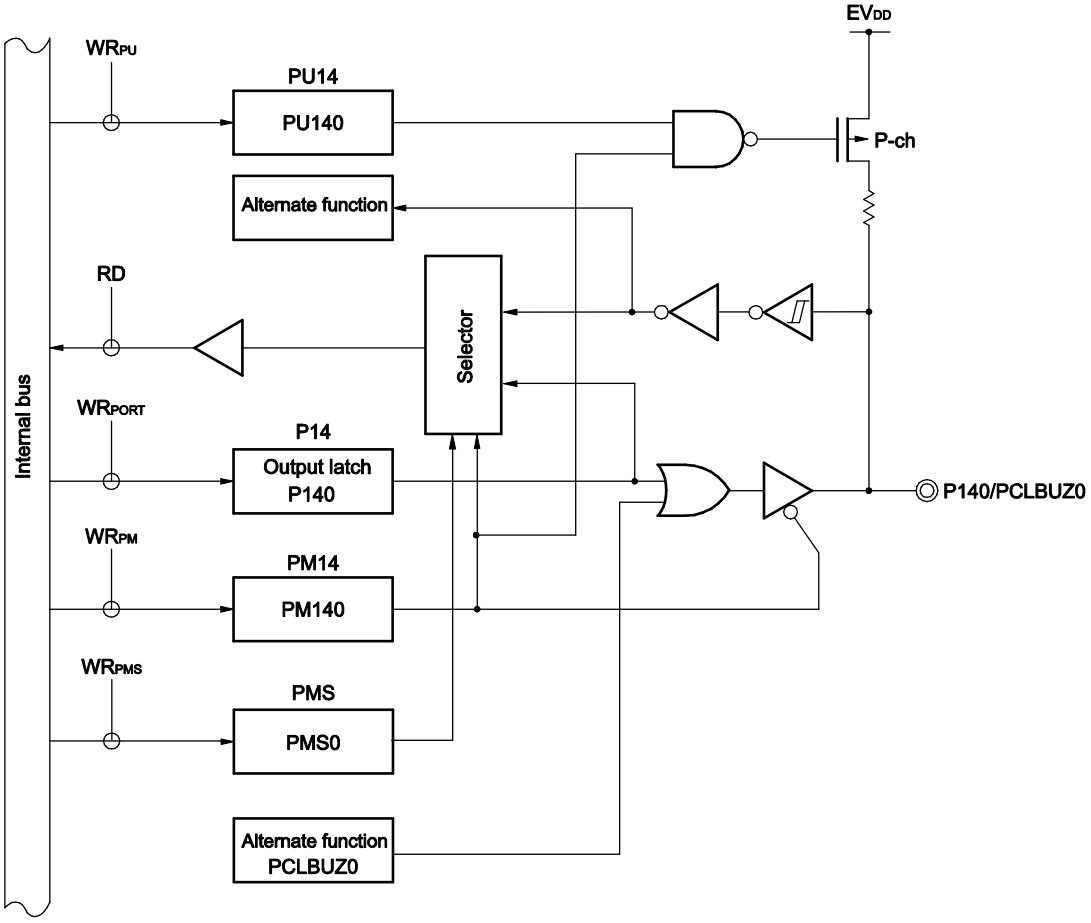

P14: Port register 14
PU14: Pull-up resistor option register 14
PM14: Port mode register 14
PMS: Port mode select register
RD: Read signal
WRxx: Write signal

4.2.14 Port 15

Port 15 is an I/O port with an output latch. Port 15 can be set to the input mode or output mode in 1-bit units using port mode register 15 (PM15). When the P150 to P157 pins are used as an input port, use of an on-chip pull-up resistor can be specified in 1-bit units by pull-up resistor option register 15 (PU15).

For the P150, P152, and P153 pin input, the threshold of the input buffer can be specified in 1-bit units using the port input threshold control register 15 (PITHL15).

This port can also be used for data I/O and clock I/O for serial interface (CSI), slave select input, and SNOOZE status output.

Reset signal generation sets P150 to P157 to input mode.

Table 4-25. Settings of Registers When Using Port 15

Pin Name		PM15x	PITHL15x	Alternate Function Setting Note 4	Remark
Name	I/O				
P150	Input	1	0	×	CMOS input (Schmitt1 input)
			1	×	CMOS input (Schmitt3 input)
	Output	0	×	×	
P151	Input	1	–	×	
	Output	0	–	(SO11 output = 1) Note 1	
P152	Input	1	0	×	CMOS input (Schmitt1 input)
			1	×	CMOS input (Schmitt3 input)
	Output	0	×	×	
P153	Input	1	0	×	CMOS input (Schmitt1 input)
			1	×	CMOS input (Schmitt3 input)
	Output	0	×	($\overline{\text{SCK11}}$ output = 1) Note 3	
P154	Input	1	–	×	
	Output	0	–	(SNZOUT7 output = 0) Note 2	
P155	Input	1	–	×	
	Output	0	–	(SNZOUT6 output = 0) Note 2	
P156	Input	1	–	×	
	Output	0	–	(SNZOUT5 output = 0) Note 2	
P157	Input	1	–	×	
	Output	0	–	(SNZOUT4 output = 0) Note 2	

Notes 1. When a pin sharing the serial array unit function is to be used as a general-purpose port pin, the SOmn bit of the serial output register m (SOm), the SOEmn bit of the serial output enable register m (SOEm), and the SEmn bit of the serial channel enable status register m (SEm) corresponding to the target unit and channel must have the same setting as its initial value (m = 0, 1, n = 0, 1).

2. When a pin sharing the SNOOZE status output function is to be used as a general-purpose port pin, the OUTEN0 to OUTEN7 bits of the SNOOZE status output control registers 0, 1, 2, 3 (PSNZCNT0, 1, 2, 3) must have the same setting as its initial value.

3. When a pin sharing the serial array unit function is to be used as a general-purpose port pin, the CKOmn bit of the serial output register m (SOm), the SOEmn bit of the serial output enable register m (SOEm), and the SEmn bit of the serial channel enable status register m (SEm) corresponding to the target unit and channel must have the same setting as its initial value (m = 0, 1, n = 0, 1).

4. Functions in parentheses can be assigned via settings in the peripheral I/O redirection registers 4, 6 (PIOR4, PIOR6).

Remark ×: Don't care
PM15x: Port mode register 15
PITHL15x: Port input threshold control register 15

Figure 4-69 to 4-73 show block diagrams of port 15 for 100-pin products.

Figure 4-69. Block Diagram of P150

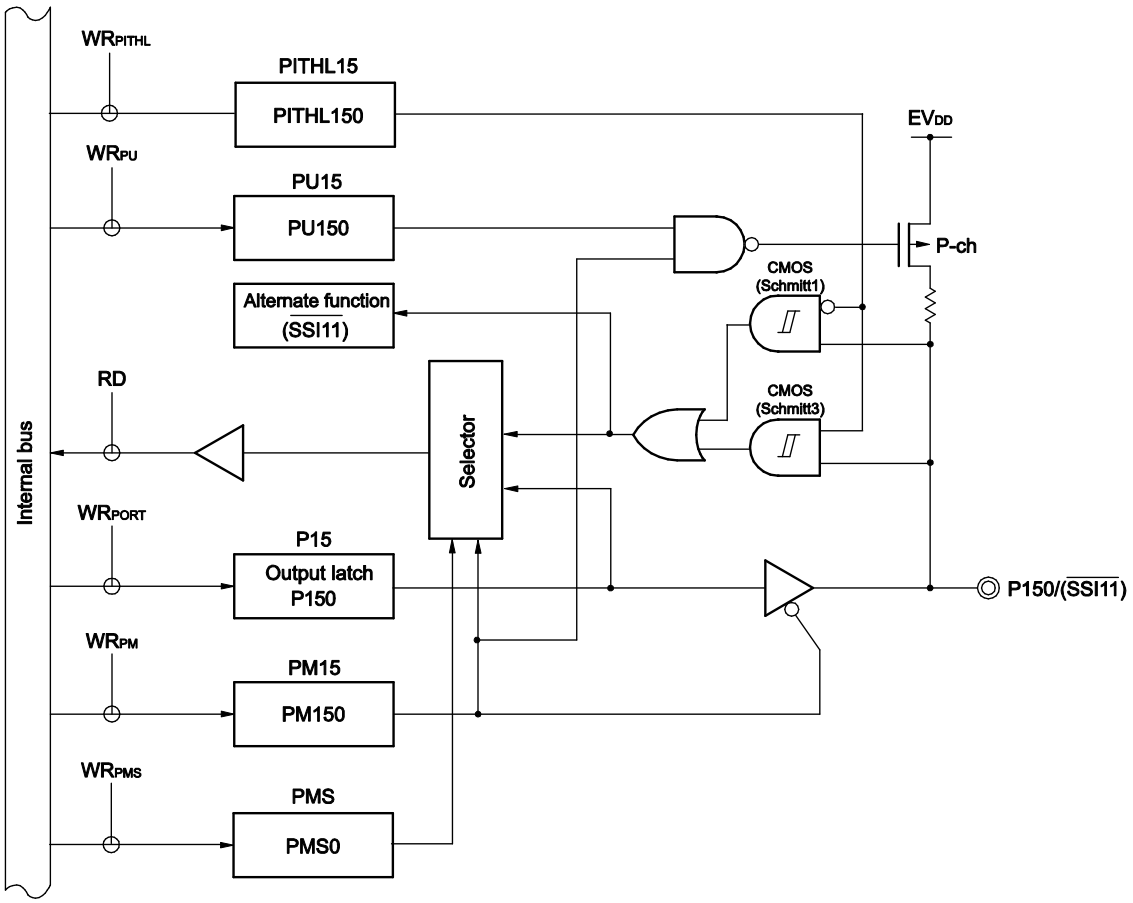

P15:	Port register 15
PU15:	Pull-up resistor option register 15
PM15:	Port mode register 15
PMS:	Port mode select register
PITHL15:	Port input threshold control register 15
RD:	Read signal
WRxx:	Write signal

Figure 4-70. Block Diagram of P151

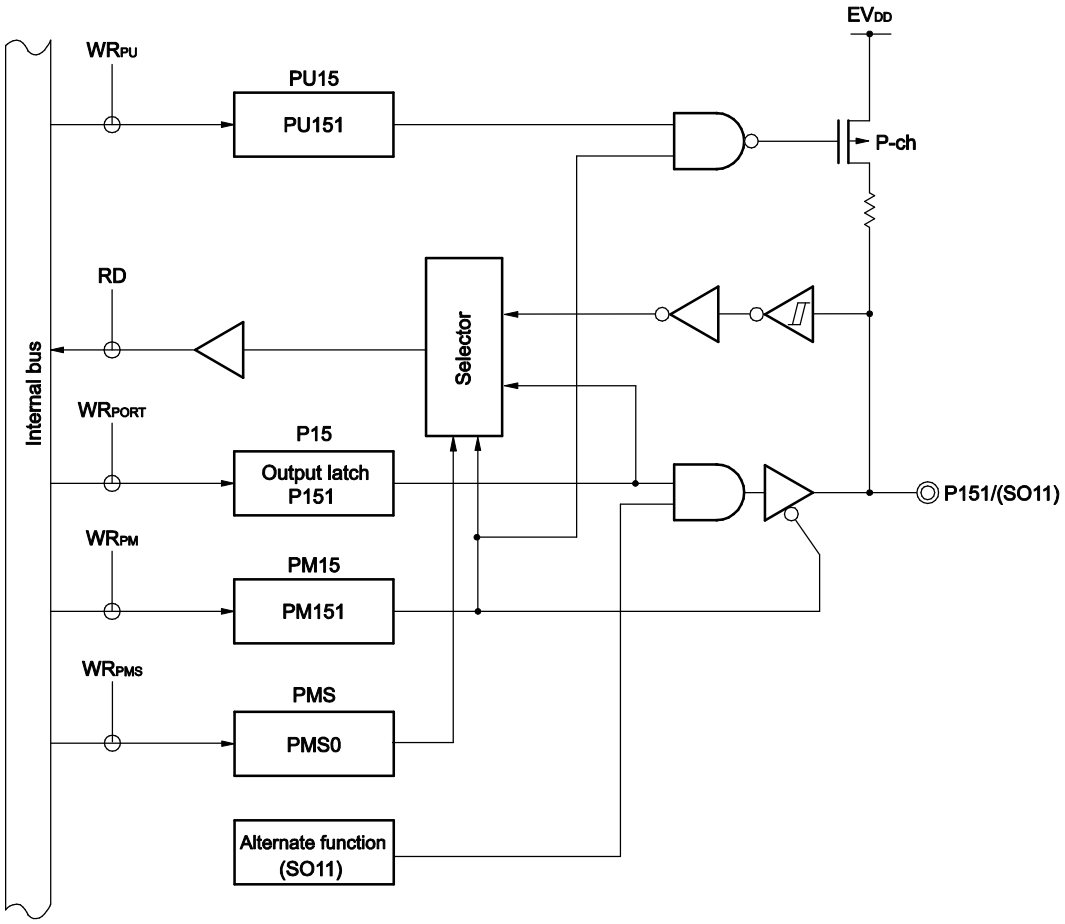

P15: Port register 15
PU15: Pull-up resistor option register 15
PM15: Port mode register 15
PMS: Port mode select register
RD: Read signal
WRxx: Write signal

Figure 4-71. Block Diagram of P152

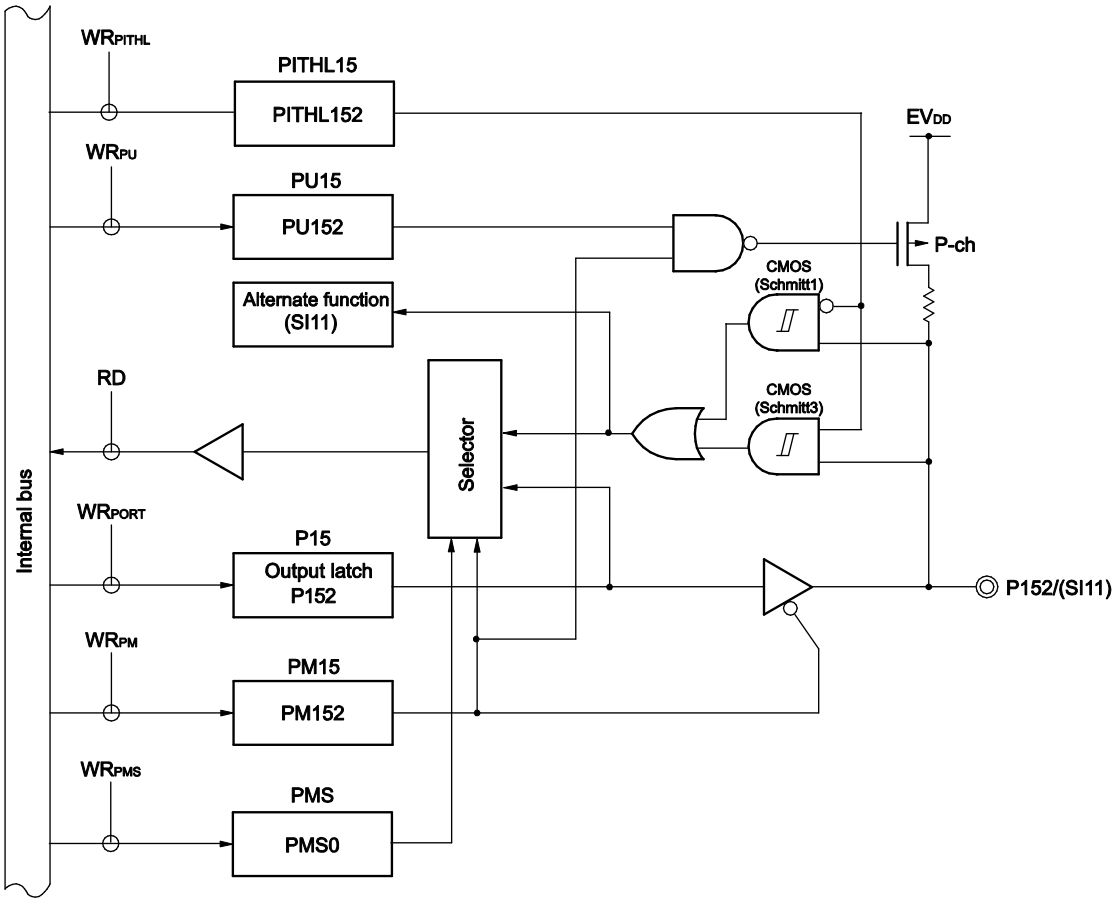

P15: Port register 15
PU15: Pull-up resistor option register 15
PM15: Port mode register 15
PMS: Port mode select register
PITHL15: Port input threshold control register 15
RD: Read signal
WRxx: Write signal

Figure 4-72. Block Diagram of P153

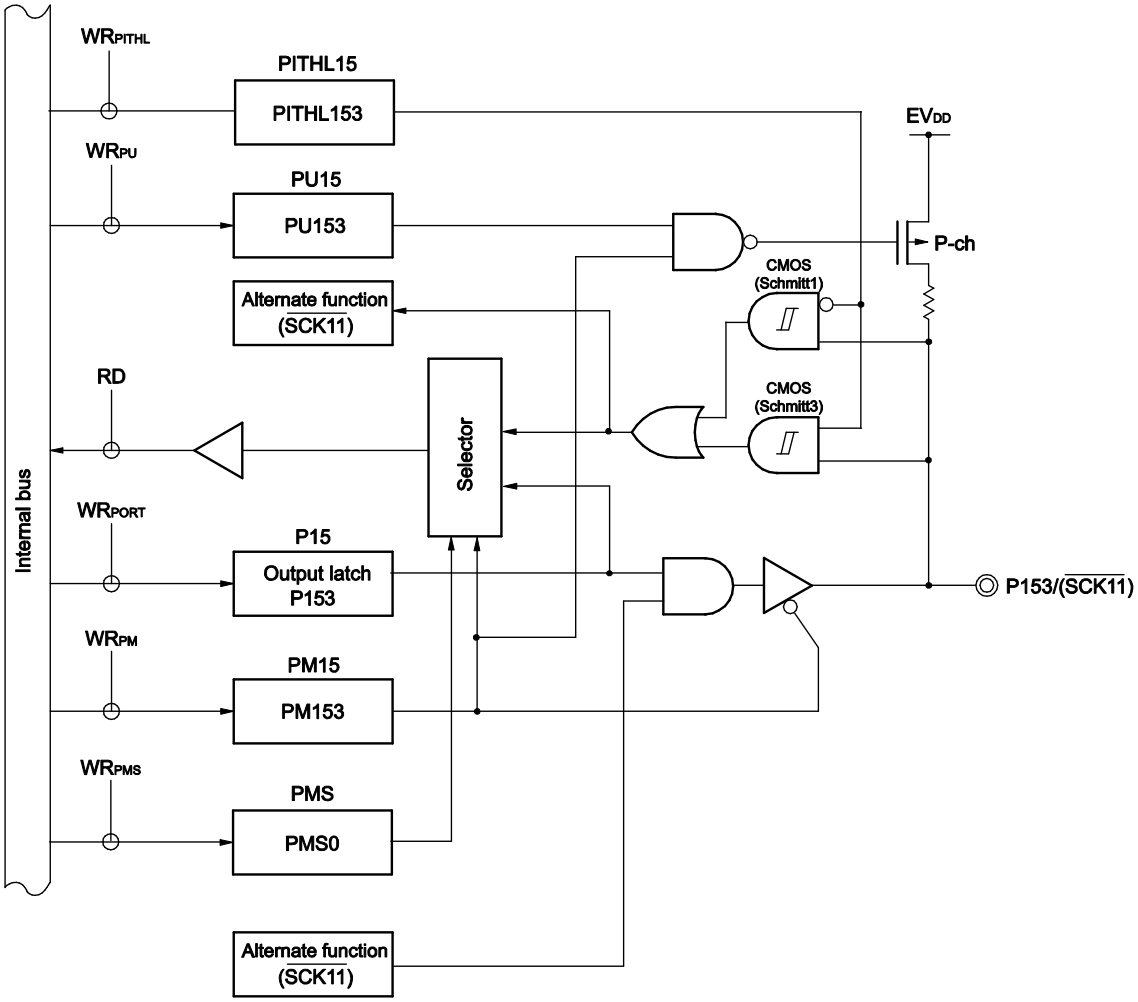

P15: Port register 15
PU15: Pull-up resistor option register 15
PM15: Port mode register 15
PMS: Port mode select register
PITHL15: Port input threshold control register 15
RD: Read signal
WRxx: Write signal

Figure 4-73. Block Diagram of P154 to P157

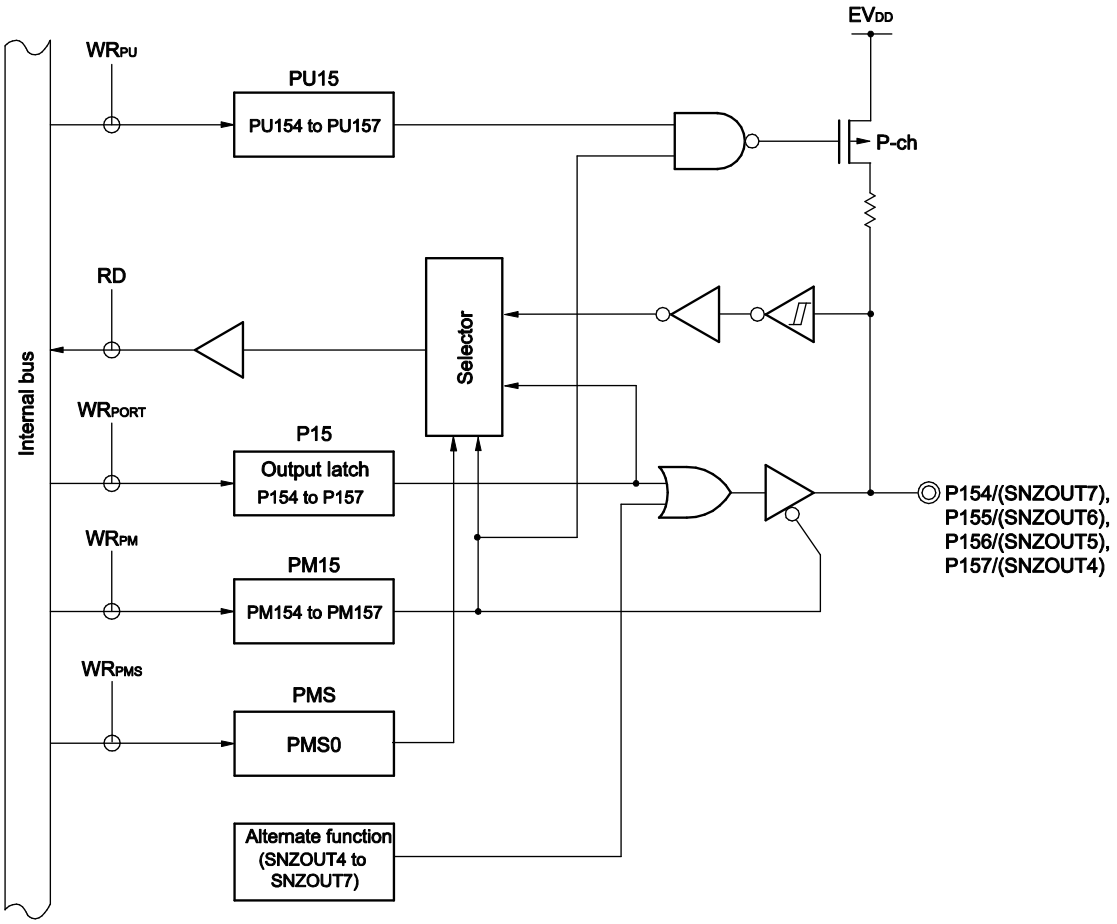

P15: Port register 15
PU15: Pull-up resistor option register 15
PM15: Port mode register 15
PMS: Port mode select register
RD: Read signal
WRxx: Write signal

4.3 Registers Controlling Port Function

Port functions are controlled by the following registers.

- Port mode registers (PMxx)
- Port registers (Pxx)
- Pull-up resistor option registers (PUxx)
- Port input mode registers (PIMxx)
- Port output mode registers (POMxx)
- Port mode control registers (PMCxx)
- A/D port configuration register (ADPC)
- Peripheral I/O redirection registers (PIORx)
- <R> Port input threshold control registers(PITHLxx)
- <R> Port output slew rate select register(PSRSEL)
- SNOOZE status output control registers 0 to 3 (PSNZCNT0 to PSNZCNT3)
- Port mode select register (PMS)

Table 4-26. Port Configuration of Group A Products (64-pin products) (1/4)

Port Name	Port Bit	Output Latch	I/O Mode Control	Pull-up Control	Input Type Control	Output Type Control	Operating Mode Control	Input Threshold Control
PORT0	0	P0.0	PM0.0	PU0.0	—	—	—	—
	1	—	—	—	—	—	—	—
	2	—	—	—	—	—	—	—
	3	—	—	—	—	—	—	—
	4	—	—	—	—	—	—	—
	5	—	—	—	—	—	—	—
	6	—	—	—	—	—	—	—
	7	—	—	—	—	—	—	—
PORT1	0	P1.0	PM1.0	PU1.0	—	—	—	—
	1	P1.1	PM1.1	PU1.1	—	—	—	—
	2	P1.2	PM1.2	PU1.2	—	—	—	—
	3	P1.3	PM1.3	PU1.3	PIM1.3	POM1.3	—	PITHL1.3
	4	P1.4	PM1.4	PU1.4	PIM1.4	POM1.4	—	PITHL1.4
	5	P1.5	PM1.5	PU1.5	—	POM1.5	—	—
	6	P1.6	PM1.6	PU1.6	PIM1.6	POM1.6	—	PITHL1.6
	7	P1.7	PM1.7	PU1.7	PIM1.7	POM1.7	—	PITHL1.7
PORT2	0	—	—	—	—	—	—	—
	1	—	—	—	—	—	—	—
	2	—	—	—	—	—	—	—
	3	—	—	—	—	—	—	—
	4	—	—	—	—	—	—	—
	5	—	—	—	—	—	—	—
	6	—	—	—	—	—	—	—
	7	—	—	—	—	—	—	—

Remark —: Not provided.

Table 4-26. Port Configuration of Group A Products (64-pin products) (2/4)

Port Name	Port Bit	Output Latch	I/O Mode Control	Pull-up Control	Input Type Control	Output Type Control	Operating Mode Control	Input Threshold Control
PORT3	0	P3.0	PM3.0	PU3.0	PIM3.0	—	—	PITHL3.0
	1	P3.1	PM3.1	PU3.1	—	—	—	—
	2	P3.2	PM3.2	PU3.2	—	—	—	—
	3	P3.3	PM3.3	—	—	—	—	—
	4	P3.4	PM3.4	—	—	—	—	—
	5	—	—	—	—	—	—	—
	6	—	—	—	—	—	—	—
	7	—	—	—	—	—	—	—
PORT4	0	P4.0	PM4.0	PU4.0	—	—	—	—
	1	P4.1	PM4.1	PU4.1	—	—	—	—
	2	P4.2	PM4.2	PU4.2	—	—	—	—
	3	P4.3	PM4.3	PU4.3	—	—	—	PITHL4.3
	4	—	—	—	—	—	—	—
	5	—	—	—	—	—	—	—
	6	—	—	—	—	—	—	—
	7	—	—	—	—	—	—	—
PORT5	0	P5.0	PM5.0	PU5.0	—	—	—	PITHL5.0
	1	P5.1	PM5.1	PU5.1	—	—	—	—
	2	P5.2	PM5.2	PU5.2	—	—	—	PITHL5.2
	3	P5.3	PM5.3	PU5.3	—	—	—	PITHL5.3
	4	—	—	—	—	—	—	—
	5	—	—	—	—	—	—	—
	6	—	—	—	—	—	—	—
	7	—	—	—	—	—	—	—
PORT6	0	P6.0	PM6.0	PU6.0	—	POM6.0	—	PITHL6.0
	1	P6.1	PM6.1	PU6.1	—	POM6.1	—	PITHL6.1
	2	P6.2	PM6.2	PU6.2	—	POM6.2	—	—
	3	P6.3	PM6.3	PU6.3	—	POM6.3	—	PITHL6.3
	4	—	—	—	—	—	—	—
	5	—	—	—	—	—	—	—
	6	—	—	—	—	—	—	—
	7	—	—	—	—	—	—	—
PORT7	0	P7.0	PM7.0	PU7.0	—	—	—	—
	1	P7.1	PM7.1	PU7.1	—	—	—	PITHL7.1
	2	P7.2	PM7.2	PU7.2	—	—	—	—
	3	P7.3	PM7.3	PU7.3	—	—	—	—
	4	P7.4	PM7.4	PU7.4	—	—	—	—
	5	P7.5	PM7.5	PU7.5	—	—	—	—
	6	P7.6	PM7.6	PU7.6	—	—	—	—
	7	P7.7	PM7.7	PU7.7	—	—	—	—

Remark —: Not provided.

Table 4-26. Port Configuration of Group A Products (64-pin products) (3/4)

Port Name	Port Bit	Output Latch	I/O Mode Control	Pull-up Control	Input Type Control	Output Type Control	Operating Mode Control	Input Threshold Control
PORT8	0	P8.0	PM8.0	—	—	—	—	—
	1	P8.1	PM8.1	—	—	—	—	—
	2	P8.2	PM8.2	—	—	—	—	—
	3	P8.3	PM8.3	—	—	—	—	—
	4	P8.4	PM8.4	—	—	—	—	—
	5	P8.5	PM8.5	—	—	—	—	—
	6	P8.6	PM8.6	—	—	—	—	—
	7	P8.7	PM8.7	—	—	—	—	—
PORT9	0	P9.0	PM9.0	—	—	—	—	—
	1	P9.1	PM9.1	—	—	—	—	—
	2	P9.2	PM9.2	PU9.2	—	—	—	—
	3	P9.3	PM9.3	PU9.3	—	—	—	—
	4	P9.4	PM9.4	PU9.4	—	—	—	—
	5	P9.5	PM9.5	PU9.5	—	—	—	—
	6	P9.6	PM9.6	PU9.6	—	—	—	—
	7	—	—	—	—	—	—	—
PORT10	0	—	—	—	—	—	—	—
	1	—	—	—	—	—	—	—
	2	—	—	—	—	—	—	—
	3	—	—	—	—	—	—	—
	4	—	—	—	—	—	—	—
	5	—	—	—	—	—	—	—
	6	—	—	—	—	—	—	—
	7	—	—	—	—	—	—	—
PORT11	0	—	—	—	—	—	—	—
	1	—	—	—	—	—	—	—
	2	—	—	—	—	—	—	—
	3	—	—	—	—	—	—	—
	4	—	—	—	—	—	—	—
	5	—	—	—	—	—	—	—
	6	—	—	—	—	—	—	—
	7	—	—	—	—	—	—	—
PORT12	0	P12.0	PM12.0	PU12.0	—	POM12.0	—	—
	1	P12.1	—	—	—	—	—	—
	2	P12.2	—	—	—	—	—	—
	3	P12.3	—	—	—	—	—	—
	4	P12.4	—	—	—	—	—	—
	5	P12.5	PM12.5	PU12.5	PIM12.5	—	—	PITHL12.5
	6	—	—	—	—	—	—	—
	7	—	—	—	—	—	—	—

Remark —: Not provided.

Table 4-26. Port Configuration of Group A Products (64-pin products) (4/4)

Port Name	Port Bit	Output Latch	I/O Mode Control	Pull-up Control	Input Type Control	Output Type Control	Operating Mode Control	Input Threshold Control
PORT13	0	P13.0	—	—	—	—	—	—
	1	—	—	—	—	—	—	—
	2	—	—	—	—	—	—	—
	3	—	—	—	—	—	—	—
	4	—	—	—	—	—	—	—
	5	—	—	—	—	—	—	—
	6	—	—	—	—	—	—	—
	7	P13.7	—	—	—	—	—	—
PORT14	0	P14.0	PM14.0	PU14.0	—	—	—	—
	1	—	—	—	—	—	—	—
	2	—	—	—	—	—	—	—
	3	—	—	—	—	—	—	—
	4	—	—	—	—	—	—	—
	5	—	—	—	—	—	—	—
	6	—	—	—	—	—	—	—
	7	—	—	—	—	—	—	—
PORT15	0	—	—	—	—	—	—	—
	1	—	—	—	—	—	—	—
	2	—	—	—	—	—	—	—
	3	—	—	—	—	—	—	—
	4	—	—	—	—	—	—	—
	5	—	—	—	—	—	—	—
	6	—	—	—	—	—	—	—
	7	—	—	—	—	—	—	—

Remark —: Not provided.

Table 4-27. Port Configuration of Products of Groups B to D (80-pin products) (1/4)

Port Name	Port Bit	Output Latch	I/O Mode Control	Pull-up Control	Input Type Control	Output Type Control	Operating Mode Control	Input Threshold Control
PORT0	0	P0.0	PM0.0	PU0.0	—	—	—	—
	1	P0.1	PM0.1	PU0.1	—	—	—	—
	2	P0.2	PM0.2	PU0.2	—	—	—	—
	3	—	—	—	—	—	—	—
	4	—	—	—	—	—	—	—
	5	—	—	—	—	—	—	—
	6	—	—	—	—	—	—	—
	7	—	—	—	—	—	—	—
PORT1	0	P1.0	PM1.0	PU1.0	PIM1.0	POM1.0	—	PITHL1.0
	1	P1.1	PM1.1	PU1.1	PIM1.1	POM1.1	—	PITHL1.1
	2	P1.2	PM1.2	PU1.2	—	POM1.2	—	—
	3	P1.3	PM1.3	PU1.3	PIM1.3	POM1.3	—	PITHL1.3
	4	P1.4	PM1.4	PU1.4	PIM1.4	POM1.4	—	PITHL1.4
	5	P1.5	PM1.5	PU1.5	—	POM1.5	—	—
	6	P1.6	PM1.6	PU1.6	PIM1.6	POM1.6	—	PITHL1.6
	7	P1.7	PM1.7	PU1.7	PIM1.7	POM1.7	—	PITHL1.7
PORT2	0	—	—	—	—	—	—	—
	1	—	—	—	—	—	—	—
	2	—	—	—	—	—	—	—
	3	—	—	—	—	—	—	—
	4	—	—	—	—	—	—	—
	5	—	—	—	—	—	—	—
	6	—	—	—	—	—	—	—
	7	—	—	—	—	—	—	—
PORT3	0	P3.0	PM3.0	PU3.0	PIM3.0	—	—	PITHL3.0
	1	P3.1	PM3.1	PU3.1	—	—	—	—
	2	P3.2	PM3.2	PU3.2	—	—	—	—
	3	P3.3	PM3.3	—	—	—	—	—
	4	P3.4	PM3.4	—	—	—	—	—
	5	—	—	—	—	—	—	—
	6	—	—	—	—	—	—	—
	7	—	—	—	—	—	—	—
PORT4	0	P4.0	PM4.0	PU4.0	—	—	—	—
	1	P4.1	PM4.1	PU4.1	—	—	—	—
	2	P4.2	PM4.2	PU4.2	—	—	—	—
	3	P4.3	PM4.3	PU4.3	—	—	—	PITHL4.3
	4	P4.4	PM4.4	PU4.4	—	—	—	—
	5	P4.5	PM4.5	PU4.5	—	—	—	—
	6	P4.6	PM4.6	PU4.6	—	—	—	—
	7	P4.7	PM4.7	PU4.7	—	—	—	—

Remark —: Not provided.

Table 4-27. Port Configuration of Products of Groups B to D (80-pin products) (2/4)

Port Name	Port Bit	Output Latch	I/O Mode Control	Pull-up Control	Input Type Control	Output Type Control	Operating Mode Control	Input Threshold Control
PORT5	0	P5.0	PM5.0	PU5.0	—	—	—	PITHL5.0
	1	P5.1	PM5.1	PU5.1	—	—	—	—
	2	P5.2	PM5.2	PU5.2	—	—	—	PITHL5.2
	3	P5.3	PM5.3	PU5.3	—	—	—	PITHL5.3
	4	P5.4	PM5.4	PU5.4	PIM5.4	—	—	PITHL5.4
	5	P5.5	PM5.5	PU5.5	—	—	—	—
	6	P5.6	PM5.6	PU5.6	—	—	—	—
	7	P5.7	PM5.7	PU5.7	—	—	—	—
PORT6	0	P6.0	PM6.0	PU6.0	—	POM6.0	—	PITHL6.0
	1	P6.1	PM6.1	PU6.1	—	POM6.1	—	PITHL6.1
	2	P6.2	PM6.2	PU6.2	PIM6.2	POM6.2	—	PITHL6.2
	3	P6.3	PM6.3	PU6.3	PIM6.3	POM6.3	—	PITHL6.3
	4	P6.4	PM6.4	PU6.4	—	—	—	—
	5	P6.5	PM6.5	PU6.5	—	—	—	—
	6	P6.6	PM6.6	PU6.6	—	—	—	—
	7	P6.7	PM6.7	PU6.7	—	—	—	—
PORT7	0	P7.0	PM7.0	PU7.0	PIM7.0	POM7.0	—	PITHL7.0
	1	P7.1	PM7.1	PU7.1	PIM7.1	POM7.1	—	PITHL7.1
	2	P7.2	PM7.2	PU7.2	—	POM7.2	—	—
	3	P7.3	PM7.3	PU7.3	PIM7.3	—	—	PITHL7.3
	4	P7.4	PM7.4	PU7.4	—	—	—	—
	5	P7.5	PM7.5	PU7.5	—	—	—	PITHL7.5
	6	P7.6	PM7.6	PU7.6	—	—	—	PITHL7.6
	7	P7.7	PM7.7	PU7.7	—	—	—	PITHL7.7
PORT8	0	P8.0	PM8.0	—	—	—	—	—
	1	P8.1	PM8.1	—	—	—	—	—
	2	P8.2	PM8.2	—	—	—	—	—
	3	P8.3	PM8.3	—	—	—	—	—
	4	P8.4	PM8.4	—	—	—	—	—
	5	P8.5	PM8.5	—	—	—	—	—
	6	P8.6	PM8.6	—	—	—	—	—
	7	P8.7	PM8.7	—	—	—	—	—
PORT9	0	P9.0	PM9.0	—	—	—	—	—
	1	P9.1	PM9.1	—	—	—	—	—
	2	P9.2	PM9.2	—	—	—	—	—
	3	P9.3	PM9.3	—	—	—	—	—
	4	P9.4	PM9.4	—	—	—	—	—
	5	P9.5	PM9.5	—	—	—	—	—
	6	P9.6	PM9.6	PU9.6	—	—	PMC9.6	—
	7	P9.7	PM9.7	PU9.7	—	—	PMC9.7	—

Remark —: Not provided.

Table 4-27. Port Configuration of Products of Groups B to D (80-pin products) (3/4)

Port Name	Port Bit	Output Latch	I/O Mode Control	Pull-up Control	Input Type Control	Output Type Control	Operating Mode Control	Input Threshold Control
PORT10	0	—	—	—	—	—	—	—
	1	—	—	—	—	—	—	—
	2	—	—	—	—	—	—	—
	3	—	—	—	—	—	—	—
	4	—	—	—	—	—	—	—
	5	—	—	—	—	—	—	—
	6	—	—	—	—	—	—	—
	7	—	—	—	—	—	—	—
PORT11	0	—	—	—	—	—	—	—
	1	—	—	—	—	—	—	—
	2	—	—	—	—	—	—	—
	3	—	—	—	—	—	—	—
	4	—	—	—	—	—	—	—
	5	—	—	—	—	—	—	—
	6	—	—	—	—	—	—	—
	7	—	—	—	—	—	—	—
PORT12	0	P12.0	PM12.0	PU12.0	—	POM12.0	PMC12.0	—
	1	P12.1	—	—	—	—	—	—
	2	P12.2	—	—	—	—	—	—
	3	P12.3	—	—	—	—	—	—
	4	P12.4	—	—	—	—	—	—
	5	P12.5	PM12.5	PU12.5	PIM12.5	—	PMC12.5	PITHL12.5
	6	P12.6	PM12.6	PU12.6	—	—	—	—
	7	—	—	—	—	—	—	—
PORT13	0	P13.0	—	—	—	—	—	—
	1	—	—	—	—	—	—	—
	2	—	—	—	—	—	—	—
	3	—	—	—	—	—	—	—
	4	—	—	—	—	—	—	—
	5	—	—	—	—	—	—	—
	6	—	—	—	—	—	—	—
	7	P13.7	—	—	—	—	—	—
PORT14	0	P14.0	PM14.0	PU14.0	—	—	—	—
	1	—	—	—	—	—	—	—
	2	—	—	—	—	—	—	—
	3	—	—	—	—	—	—	—
	4	—	—	—	—	—	—	—
	5	—	—	—	—	—	—	—
	6	—	—	—	—	—	—	—
	7	—	—	—	—	—	—	—

Remark —: Not provided.

Table 4-27. Port Configuration of Products of Groups B to D (80-pin products) (4/4)

Port Name	Port Bit	Output Latch	I/O Mode Control	Pull-up Control	Input Type Control	Output Type Control	Operating Mode Control	Input Threshold Control
PORT15	0	—	—	—	—	—	—	—
	1	—	—	—	—	—	—	—
	2	—	—	—	—	—	—	—
	3	—	—	—	—	—	—	—
	4	—	—	—	—	—	—	—
	5	—	—	—	—	—	—	—
	6	—	—	—	—	—	—	—
	7	—	—	—	—	—	—	—

Remark —: Not provided.

Table 4-28. Port Configuration of Group E Products (100-pin products) (1/4)

Port Name	Port Bit	Output Latch	I/O Mode Control	Pull-up Control	Input Type Control	Output Type Control	Operating Mode Control	Input Threshold Control
PORT0	0	P0.0	PM0.0	PU0.0	—	—	—	—
	1	P0.1	PM0.1	PU0.1	—	—	—	—
	2	P0.2	PM0.2	PU0.2	—	—	—	—
	3	P0.3	PM0.3	PU0.3	—	—	—	—
	4	—	—	—	—	—	—	—
	5	—	—	—	—	—	—	—
	6	—	—	—	—	—	—	—
	7	—	—	—	—	—	—	—
PORT1	0	P1.0	PM1.0	PU1.0	PIM1.0	POM1.0	—	PITHL1.0
	1	P1.1	PM1.1	PU1.1	PIM1.1	POM1.1	—	PITHL1.1
	2	P1.2	PM1.2	PU1.2	—	POM1.2	—	—
	3	P1.3	PM1.3	PU1.3	PIM1.3	POM1.3	—	PITHL1.3
	4	P1.4	PM1.4	PU1.4	PIM1.4	POM1.4	—	PITHL1.4
	5	P1.5	PM1.5	PU1.5	—	POM1.5	—	—
	6	P1.6	PM1.6	PU1.6	PIM1.6	POM1.6	—	PITHL1.6
	7	P1.7	PM1.7	PU1.7	PIM1.7	POM1.7	—	PITHL1.7
PORT2	0	—	—	—	—	—	—	—
	1	—	—	—	—	—	—	—
	2	—	—	—	—	—	—	—
	3	—	—	—	—	—	—	—
	4	—	—	—	—	—	—	—
	5	—	—	—	—	—	—	—
	6	—	—	—	—	—	—	—
	7	—	—	—	—	—	—	—
PORT3	0	P3.0	PM3.0	PU3.0	PIM3.0	—	—	PITHL3.0
	1	P3.1	PM3.1	PU3.1	—	—	—	—
	2	P3.2	PM3.2	PU3.2	—	—	—	—
	3	P3.3	PM3.3	—	—	—	—	—
	4	P3.4	PM3.4	—	—	—	—	—
	5	—	—	—	—	—	—	—
	6	—	—	—	—	—	—	—
	7	—	—	—	—	—	—	—
PORT4	0	P4.0	PM4.0	PU4.0	—	—	—	—
	1	P4.1	PM4.1	PU4.1	—	—	—	—
	2	P4.2	PM4.2	PU4.2	—	—	—	—
	3	P4.3	PM4.3	PU4.3	—	—	—	PITHL4.3
	4	P4.4	PM4.4	PU4.4	—	—	—	—
	5	P4.5	PM4.5	PU4.5	—	—	—	—
	6	P4.6	PM4.6	PU4.6	—	—	—	—
	7	P4.7	PM4.7	PU4.7	—	—	—	

Remark —: Not provided.

Table 4-28. Port Configuration of Group E Products (100-pin products) (2/4)

Port Name	Port Bit	Output Latch	I/O Mode Control	Pull-up Control	Input Type Control	Output Type Control	Operating Mode Control	Input Threshold Control
PORT5	0	P5.0	PM5.0	PU5.0	—	—	—	PITHL5.0
	1	P5.1	PM5.1	PU5.1	—	—	—	—
	2	P5.2	PM5.2	PU5.2	—	—	—	PITHL5.2
	3	P5.3	PM5.3	PU5.3	—	—	—	PITHL5.3
	4	P5.4	PM5.4	PU5.4	PIM5.4	—	—	PITHL5.4
	5	P5.5	PM5.5	PU5.5	—	—	—	—
	6	P5.6	PM5.6	PU5.6	—	—	—	—
	7	P5.7	PM5.7	PU5.7	—	—	—	—
PORT6	0	P6.0	PM6.0	PU6.0	—	POM6.0	—	PITHL6.0
	1	P6.1	PM6.1	PU6.1	—	POM6.1	—	PITHL6.1
	2	P6.2	PM6.2	PU6.2	PIM6.2	POM6.2	—	PITHL6.2
	3	P6.3	PM6.3	PU6.3	PIM6.3	POM6.3	—	PITHL6.3
	4	P6.4	PM6.4	PU6.4	—	—	—	—
	5	P6.5	PM6.5	PU6.5	—	—	—	—
	6	P6.6	PM6.6	PU6.6	—	—	—	—
	7	P6.7	PM6.7	PU6.7	—	—	—	—
PORT7	0	P7.0	PM7.0	PU7.0	PIM7.0	POM7.0	PMC7.0	PITHL7.0
	1	P7.1	PM7.1	PU7.1	PIM7.1	POM7.1	PMC7.1	PITHL7.1
	2	P7.2	PM7.2	PU7.2	—	POM7.2	PMC7.2	—
	3	P7.3	PM7.3	PU7.3	PIM7.3	—	PMC7.3	PITHL7.3
	4	P7.4	PM7.4	PU7.4	—	—	PMC7.4	—
	5	P7.5	PM7.5	PU7.5	—	—	—	PITHL7.5
	6	P7.6	PM7.6	PU7.6	—	—	—	PITHL7.6
	7	P7.7	PM7.7	PU7.7	—	—	—	PITHL7.7
PORT8	0	P8.0	PM8.0	—	—	—	—	—
	1	P8.1	PM8.1	—	—	—	—	—
	2	P8.2	PM8.2	—	—	—	—	—
	3	P8.3	PM8.3	—	—	—	—	—
	4	P8.4	PM8.4	—	—	—	—	—
	5	P8.5	PM8.5	—	—	—	—	—
	6	P8.6	PM8.6	—	—	—	—	—
	7	P8.7	PM8.7	—	—	—	—	—
PORT9	0	P9.0	PM9.0	—	—	—	—	—
	1	P9.1	PM9.1	—	—	—	—	—
	2	P9.2	PM9.2	—	—	—	—	—
	3	P9.3	PM9.3	—	—	—	—	—
	4	P9.4	PM9.4	—	—	—	—	—
	5	P9.5	PM9.5	—	—	—	—	—
	6	P9.6	PM9.6	—	—	—	—	—
	7	P9.7	PM9.7	—	—	—	—	—

Remark —: Not provided.

Table 4-28. Port Configuration of Group E Products (100-pin products) (3/4)

Port Name	Port Bit	Output Latch	I/O Mode Control	Pull-up Control	Input Type Control	Output Type Control	Operating Mode Control	Input Threshold Control
PORT10	0	P10.0	PM10.0	—	—	—	—	—
	1	P10.1	PM10.1	—	—	—	—	—
	2	P10.2	PM10.2	—	—	—	—	—
	3	P10.3	PM10.3	—	—	—	—	—
	4	P10.4	PM10.4	—	—	—	—	—
	5	P10.5	PM10.5	—	—	—	—	—
	6	P10.6	PM10.6	PU10.6	—	—	—	—
	7	P10.7	PM10.7	PU10.7	—	—	—	PITHL10.7
PORT11	0	—	—	—	—	—	—	—
	1	—	—	—	—	—	—	—
	2	—	—	—	—	—	—	—
	3	—	—	—	—	—	—	—
	4	—	—	—	—	—	—	—
	5	—	—	—	—	—	—	—
	6	—	—	—	—	—	—	—
	7	—	—	—	—	—	—	—
PORT12	0	P12.0	PM12.0	PU12.0	—	POM12.0	PMC12.0	—
	1	P12.1	—	—	—	—	—	—
	2	P12.2	—	—	—	—	—	—
	3	P12.3	—	—	—	—	—	—
	4	P12.4	—	—	—	—	—	—
	5	P12.5	PM12.5	PU12.5	PIM12.5	—	PMC12.5	PITHL12.5
	6	P12.6	PM12.6	PU12.6	—	—	—	—
	7	P12.7	PM12.7	PU12.7	—	—	—	—
PORT13	0	P13.0	—	—	—	—	—	—
	1	—	—	—	—	—	—	—
	2	—	—	—	—	—	—	—
	3	—	—	—	—	—	—	—
	4	—	—	—	—	—	—	—
	5	—	—	—	—	—	—	—
	6	—	—	—	—	—	—	—
	7	P13.7	—	—	—	—	—	—
PORT14	0	P14.0	PM14.0	PU14.0	—	—	—	—
	1	—	—	—	—	—	—	—
	2	—	—	—	—	—	—	—
	3	—	—	—	—	—	—	—
	4	—	—	—	—	—	—	—
	5	—	—	—	—	—	—	—
	6	—	—	—	—	—	—	—
	7	—	—	—	—	—	—	—

Remark —: Not provided.

Table 4-28. Port Configuration of Group E Products (100-pin products) (4/4)

Port Name	Port Bit	Output Latch	I/O Mode Control	Pull-up Control	Input Type Control	Output Type Control	Operating Mode Control	Input Threshold Control
PORT15	0	P15.0	PM15.0	PU15.0	—	—	—	PITHL15.0
	1	P15.1	PM15.1	PU15.1	—	—	—	—
	2	P15.2	PM15.2	PU15.2	—	—	—	PITHL15.2
	3	P15.3	PM15.3	PU15.3	—	—	—	PITHL15.3
	4	P15.4	PM15.4	PU15.4	—	—	—	—
	5	P15.5	PM15.5	PU15.5	—	—	—	—
	6	P15.6	PM15.6	PU15.6	—	—	—	—
	7	P15.7	PM15.7	PU15.7	—	—	—	—

Remark —: Not provided.

4.3.1 Port mode registers (PMxx)

These registers specify input or output mode for the port in 1-bit units.

These registers can be set by a 1-bit or 8-bit memory manipulation instruction.

Reset signal generation sets these registers to FFH.

When port pins are used as alternate-function pins, set the port mode register by referencing **4.5 Settings of Port Mode Register and Output Latch When Using Alternate Function**.

Figure 4-74. Format of Port Mode Register (100-pin products)

Symbol	7	6	5	4	3	2	1	0	Address	After reset	R/W
PM0	1	1	1	1	PM03	PM02	PM01	PM00	FFF20H	FFH	R/W
PM1	PM17	PM16	PM15	PM14	PM13	PM12	PM11	PM10	FFF21H	FFH	R/W
PM3	1	1	1	PM34	PM33	PM32	PM31	PM30	FFF23H	FFH	R/W
PM4	PM47	PM46	PM45	PM44	PM43	PM42	PM41	PM40	FFF24H	FFH	R/W
PM5	PM57	PM56	PM55	PM54	PM53	PM52	PM51	PM50	FFF25H	FFH	R/W
PM6	PM67	PM66	PM65	PM64	PM63	PM62	PM61	PM60	FFF26H	FFH	R/W
PM7	PM77	PM76	PM75	PM74	PM73	PM72	PM71	PM70	FFF27H	FFH	R/W
PM8	PM87	PM86	PM85	PM84	PM83	PM82	PM81	PM80	FFF28H	FFH	R/W
PM9	PM97	PM96	PM95	PM94	PM93	PM92	PM91	PM90	FFF29H	FFH	R/W
PM10	PM107	PM106	PM105	PM104	PM103	PM102	PM101	PM100	FFF2AH	FFH	R/W
PM12	PM127	PM126	PM125	1	1	1	1	PM120	FFF2CH	FFH	R/W
PM14	1	1	1	1	1	1	1	PM140	FFF2EH	FFH	R/W
PM15	PM157	PM156	PM155	PM154	PM153	PM152	PM151	PM150	FFF2FH	FFH	R/W

PMmn	Pmn pin I/O mode selection (m = 0, 1, 3 to 10, 12, 14, 15; n = 0 to 7)
0	Output mode (output buffer on)
1	Input mode (output buffer off)

Caution Be sure to set bits for pins that are not present to their initial values.

4.3.2 Port registers (Pxx)

These registers set the output latch value of a port.

If the data is read in the input mode, the pin level is read. If it is read in the output mode, the output latch value is read [Note].

These registers can be set by a 1-bit or 8-bit memory manipulation instruction.

Even when PMxx is set to 0 (output mode), the pin level can be read from Pxx by setting PMS.0 (port mode select) to 1.

Reset signal generation clears these registers to 00H.

Note When P33, P34, P70 to P74, P80 to P87, P90 to P97, P100 to P105, P120, and P125 are set up as analog inputs of the A/D converter, P80 is set up as D/A converter output, or P81 to P85 are set up as analog inputs of the comparator, if a port is read while in the input mode, 0 is always returned, not the pin level.

Figure 4-75. Format of Port Register (100-pin products)

Symbol	7	6	5	4	3	2	1	0	Address	After reset	R/W
P0	0	0	0	0	P03	P02	P01	P00	FFF00H	00H (output latch)	R/W
P1	P17	P16	P15	P14	P13	P12	P11	P10	FFF01H	00H (output latch)	R/W
P3	0	0	0	P34	P33	P32	P31	P30	FFF03H	00H (output latch)	R/W
P4	P47	P46	P45	P44	P43	P42	P41	P40	FFF04H	00H (output latch)	R/W
P5	P57	P56	P55	P54	P53	P52	P51	P50	FFF05H	00H (output latch)	R/W
P6	P67	P66	P65	P64	P63	P62	P61	P60	FFF06H	00H (output latch)	R/W
P7	P77	P76	P75	P74	P73	P72	P71	P70	FFF07H	00H (output latch)	R/W
P8	P87	P86	P85	P84	P83	P82	P81	P80	FFF08H	00H (output latch)	R/W
P9	P97	P96	P95	P94	P93	P92	P91	P90	FFF09H	00H (output latch)	R/W
P10	P107	P106	P105	P104	P103	P102	P101	P100	FFF0AH	00H (output latch)	R/W
P12	P127	P126	P125	P124	P123	P122	P121	P120	FFF0CH	Undefined	R/W Note 1
P13	P137	0	0	0	0	0	0	P130	FFF0DH	Undefined Note 2	R/W Note 1
P14	0	0	0	0	0	0	0	P140	FFF0EH	00H (output latch)	R/W
P15	P157	P156	P155	P154	P153	P152	P151	P150	FFF0FH	00H (output latch)	R/W

Pmn	m = 0, 1, 3 to 10, 12 to 15; n = 0 to 7	
	Output data control (in output mode)	Input data read (in input mode)
0	Output 0	Input low level
1	Output 1	Input high level

Notes 1. P121 to P124 and P137 are read-only.

2. P130 bit depends on the setting of User Option Byte (000C2H/020C2H).
RESOUTB = 0 (Selects P130 as the RESOUT pin): P130 = 1
RESOUTB = 1 (Selects P130 as a general port pin): P130 = 0

Caution Be sure to set bits for pins that are not present to their initial values.

4.3.3 Pull-up resistor option registers (PUxx)

These registers specify whether the on-chip pull-up resistors are to be used or not. On-chip pull-up resistors can be used in 1-bit units only for the bits set to input mode (PMmn = 1 and POMmn = 0) for the pins to which the use of an on-chip pull-up resistor has been specified in these registers. On-chip pull-up resistors cannot be connected to bits set to output mode and bits used as alternate-function output pins or analog pins, regardless of the settings of these registers.

These registers can be set by a 1-bit or 8-bit memory manipulation instruction.

Reset signal generation clears these registers to 00H (only PU4 is set to 01H).

Figure 4-76. Format of Pull-up Resistor Option Register (100-pin products) Note

Symbol	7	6	5	4	3	2	1	0	Address	After reset	R/W
PU0	0	0	0	0	PU03	PU02	PU01	PU00	F0030H	00H	R/W
PU1	PU17	PU16	PU15	PU14	PU13	PU12	PU11	PU10	F0031H	00H	R/W
PU3	0	0	0	0	0	PU32	PU31	PU30	F0033H	00H	R/W
PU4	PU47	PU46	PU45	PU44	PU43	PU42	PU41	PU40	F0034H	01H	R/W
PU5	PU57	PU56	PU55	PU54	PU53	PU52	PU51	PU50	F0035H	00H	R/W
PU6	PU67	PU66	PU65	PU64	PU63	PU62	PU61	PU60	F0036H	00H	R/W
PU7	PU77	PU76	PU75	PU74	PU73	PU72	PU71	PU70	F0037H	00H	R/W
PU9	PU97	PU96	PU95	PU94	PU93	PU92	0	0	F0039H	00H	R/W
PU10	PU107	PU106	0	0	0	0	0	0	F003AH	00H	R/W
PU12	PU127	PU126	PU125	0	0	0	0	PU120	F003CH	00H	R/W
PU14	0	0	0	0	0	0	0	PU140	F003EH	00H	R/W
PU15	PU157	PU156	PU155	PU154	PU153	PU152	PU151	PU150	F003FH	00H	R/W

PUmn	Pmn pin on-chip pull-up resistor selection (m = 0, 1, 3 to 7, 9, 10, 12, 14, 15; n = 0 to 7)
0	On-chip pull-up resistor not connected
1	On-chip pull-up resistor connected

Note Group E products do not have the PU9 register (products of Groups A to D have the PU9 register).

Caution Be sure to set bits for pins that are not present to their initial values.

4.3.4 Port input mode registers (PIM1, PIM3, PIM5 to PIM7, PIM12)

These registers set the input buffer of P10, P11, P13, P14, P16, P17, P30, P54, P62, P63, P70, P71, P73, and P125 in 1-bit units.

TTL input buffer can be selected during serial communication with an external device of the different potential.

These registers can be set by a 1-bit or 8-bit memory manipulation instruction.

Reset signal generation clears these registers to 00H.

Figure 4-77. Format of Port Input Mode Register (100-pin products)

Symbol	7	6	5	4	3	2	1	0	Address	After reset	R/W
PIM1	PIM17	PIM16	0	PIM14	PIM13	0	PIM11	PIM10	F0041H	00H	R/W
PIM3	0	0	0	0	0	0	0	PIM30	F0043H	00H	R/W
PIM5	0	0	0	PIM54	0	0	0	0	F0045H	00H	R/W
PIM6	0	0	0	0	PIM63	PIM62	0	0	F0046H	00H	R/W
PIM7	0	0	0	0	PIM73	0	PIM71	PIM70	F0047H	00H	R/W
PIM12	0	0	PIM125	0	0	0	0	0	F004CH	00H	R/W

PIMmn	Pmn pin input buffer selection (m = 1, 3, 5 to 7, 12; n = 0 to 7)
0	Normal input buffer
1	TTL input buffer

Caution Be sure to set bits for pins that are not present to their initial values.

4.3.5 Port output mode registers (POM1, POM6, POM7, POM12)

These registers set the output mode of P10 to P17, P60 to P63, P70 to P72, and P120 in 1-bit units.

N-ch open-drain output (EV_{DD} tolerance) mode can be selected for the SDA00, SDA01, SDA10, and SDA11 pins during serial communication with an external device of the different potential or during simplified IIC communication with an external device of the same potential, and it can be also selected for the SDAA0 and SCLA0 pins during IIC communication.

These registers can be set by a 1-bit or 8-bit memory manipulation instruction.

Reset signal generation clears these registers to 00H.

Figure 4-78. Format of Port Output Mode Register (100-pin products)

Symbol	7	6	5	4	3	2	1	0	Address	After reset	R/W
POM1	POM17	POM16	POM15	POM14	POM13	POM12	POM11	POM10	F0051H	00H	R/W
POM6	0	0	0	0	POM63	POM62	POM61	POM60	F0056H	00H	R/W
POM7	0	0	0	0	0	POM72	POM71	POM70	F0057H	00H	R/W
POM12	0	0	0	0	0	0	0	POM120	F005CH	00H	R/W

POMmn	Pmn pin output mode selection (m = 1, 6, 7, 12; n = 0 to 7)
0	Normal output mode
1	N-ch open-drain output (EV_{DD} tolerance) mode

Cautions 1. The on-chip pull-up resistor cannot be used when POMmn is set to 1.

2. Be sure to set bits for pins that are not present to their initial values.

4.3.6 Port mode control registers 7, 9, 12 (PMC7, PMC9, PMC12)

These registers set the P70 to P74, P96, P97, P120, and P125 digital I/O or analog input in 1-bit units.

These registers can be set by a 1-bit or 8-bit memory manipulation instruction.

Reset signal generation clears these registers to FFH.

Figure 4-79. Format of Port Mode Control Register (100-pin products)

Symbol	7	6	5	4	3	2	1	0	Address	After reset	R/W
PMC7	1	1	1	PMC74 Note 1	PMC73 Note 1	PMC72 Note 1	PMC71 Note 1	PMC70	F0067H	FFH	R/W
PMC9	PMC97 Note 2	PMC96 Note 2	1	1	1	1	1	1	F0069H	FFH	R/W
PMC12	1	1	PMC125	1	1	1	1	PMC120	F006CH	FFH	R/W

PMCmn	Pmn pin digital I/O or analog input selection (m = 7, 9, 12; n = 0 to 7)
0	Digital I/O (alternate function other than analog input)
1	Analog input

Notes 1. Be sure to clear the following bits to 0.

PMC71 to PMC74 bits in the RL78/F14 products with 64 pins and 128 Kbytes to 256 Kbytes of code flash memory.

PMC73 bit in the RL78/F14 products with 48 pins and 128 Kbytes to 256 Kbytes of code flash memory.

2. The ADPC and PMC9 registers are used to select the digital I/O or analog input functions for the P96/ANI16 and P97/ANI17 pins and for the P96/ANI26 and P97/ANI27 pins, respectively. For details on pin functions allocated to each product, see **1.5 Pin Configurations**.

Cautions 1. Be sure to set bits for pins that are not present to their initial values, and see Note 1 for PMC71 to PMC74.

2. Set port pins specified as analog input pins to input mode by using port mode register x (PMx).

4.3.7 A/D port configuration register (ADPC)

This register is used to switch the P33/ANI0/AVREFP, P34/ANI1/AVREFM, P80/ANI2/ANO0, P81/ANI3/IVCMP00 to P84/ANI6/IVCMP03, P85/ANI7/IVREF0, and P86/ANI8 to P105/ANI23 pins to digital I/O of port or analog input of A/D converter.

This register is also used to switch the P80/ANI2/ANO0 pins to digital I/O of port or analog output of D/A converter.

This register is also used to switch the P81/ANI3/IVCMP00 to P84/ANI6/IVCMP03 and P85/ANI7/IVREF0 pins to analog input of comparator or digital I/O of port.

The ADPC register can be set by an 8-bit memory manipulation instruction.

Reset signal generation clears this register to 00H.

Figure 4-80. Format of A/D Port Configuration Register (ADPC) (100-pin products)

Address: F0076H After reset: 00H R/W

Symbol	7	6	5	4	3	2	1	0
ADPC	0	0	0	ADPC4	ADPC3	ADPC2	ADPC1	ADPC0

ADPC4 to ADPC0					ANI23/P105	ANI22/P104	ANI21/P103	ANI20/P102	ANI19/P101	ANI18/P100	ANI17/P97	ANI16/P96	ANI15/P95	ANI14/P94	ANI13/P93	ANI12/P92	ANI11/P91	ANI10/P90	ANI9/P87	ANI8/P86	ANI7/P85	ANI6/P84	ANI5/P83	ANI4/P82	ANI3/P81	ANI2/P80	ANI1/P34	ANI0/P33
0	0	0	0	0	A	A	A	A	A	A	A	A	A	A	A	A	A	A	A	A	A	A	A	A	A	A	A	A
0	0	0	0	1	D	D	D	D	D	D	D	D	D	D	D	D	D	D	D	D	D	D	D	D	D	D	D	D
0	0	0	1	0	D	D	D	D	D	D	D	D	D	D	D	D	D	D	D	D	D	D	D	D	D	D	D	A
0	0	0	1	1	D	D	D	D	D	D	D	D	D	D	D	D	D	D	D	D	D	D	D	D	D	D	A	A
0	0	1	0	0	D	D	D	D	D	D	D	D	D	D	D	D	D	D	D	D	D	D	D	D	D	A	A	A
0	0	1	0	1	D	D	D	D	D	D	D	D	D	D	D	D	D	D	D	D	D	D	D	D	A	A	A	A
0	0	1	1	0	D	D	D	D	D	D	D	D	D	D	D	D	D	D	D	D	D	D	D	A	A	A	A	A
0	0	1	1	1	D	D	D	D	D	D	D	D	D	D	D	D	D	D	D	D	D	D	A	A	A	A	A	A
0	1	0	0	0	D	D	D	D	D	D	D	D	D	D	D	D	D	D	D	D	D	A	A	A	A	A	A	A
0	1	0	0	1	D	D	D	D	D	D	D	D	D	D	D	D	D	D	D	D	A	A	A	A	A	A	A	A
0	1	0	1	0	D	D	D	D	D	D	D	D	D	D	D	D	D	D	D	A	A	A	A	A	A	A	A	A
0	1	0	1	1	D	D	D	D	D	D	D	D	D	D	D	D	D	D	A	A	A	A	A	A	A	A	A	A
0	1	1	0	0	D	D	D	D	D	D	D	D	D	D	D	D	D	A	A	A	A	A	A	A	A	A	A	A
0	1	1	0	1	D	D	D	D	D	D	D	D	D	D	D	D	A	A	A	A	A	A	A	A	A	A	A	A
0	1	1	1	0	D	D	D	D	D	D	D	D	D	D	D	A	A	A	A	A	A	A	A	A	A	A	A	A
0	1	1	1	1	D	D	D	D	D	D	D	D	D	D	A	A	A	A	A	A	A	A	A	A	A	A	A	A
1	0	0	0	0	D	D	D	D	D	D	D	D	D	A	A	A	A	A	A	A	A	A	A	A	A	A	A	A
1	0	0	0	1	D	D	D	D	D	D	D	D	A	A	A	A	A	A	A	A	A	A	A	A	A	A	A	A
1	0	0	1	0	D	D	D	D	D	D	D	A	A	A	A	A	A	A	A	A	A	A	A	A	A	A	A	A
1	0	0	1	1	D	D	D	D	D	D	A	A	A	A	A	A	A	A	A	A	A	A	A	A	A	A	A	A
1	0	1	0	0	D	D	D	D	D	A	A	A	A	A	A	A	A	A	A	A	A	A	A	A	A	A	A	A
1	0	1	0	1	D	D	D	D	A	A	A	A	A	A	A	A	A	A	A	A	A	A	A	A	A	A	A	A
1	0	1	1	0	D	D	D	A	A	A	A	A	A	A	A	A	A	A	A	A	A	A	A	A	A	A	A	A
1	0	1	1	1	D	D	A	A	A	A	A	A	A	A	A	A	A	A	A	A	A	A	A	A	A	A	A	A
1	1	0	0	0	D	A	A	A	A	A	A	A	A	A	A	A	A	A	A	A	A	A	A	A	A	A	A	A
Other than above					Setting prohibited																							

Cautions 1. Set the channel used for A/D conversion to the input mode by using port mode registers 3, 8, 9, 10 (PM3, PM8, PM9, PM10).

<R> **2. Set the channel used for D/A conversion or comparator to the input mode by using port mode register 8 (PM8).**

3. Do not set the pin set by the ADPC register as digital I/O by the analog input channel specification register (ADS).

4. Do not set the pin set by the ADPC register as digital I/O by D/A converter mode register (DAM) as D/A conversion operation enable.

5. Do not set the pin set by the ADPC register as digital I/O by the comparator I/O select register (CMPSEL).

<R> **4.3.8 Port input threshold control registers (PITHL1, PITHL3 to PITHL7, PITHL10, PITHL12, PITHL15)**

These registers are used to specify the threshold value of the input buffers for P10, P11, P13, P14, P16, P17, P30, P43, P50, P52 to P54, P60 to P63, P70, P71, P73, P75 to P77, P107, P125, P150, P152, and P153 in 1-bit units.

These registers can set V_{IL} to 0.5 EV_{DD} for the serial communications interface and some external interrupts.

The PITHL1, PITHL3 to PITHL7, PITHL10, PITHL12, and PITHL15 registers can be set by a 1-bit or 8-bit memory manipulation instruction.

Reset signal generation clears these registers to 00H.

Figure 4-81. Format of Port Input Threshold Control Register (100-pin products)

Address: F0021H After reset: 00H R/W

Symbol	7	6	5	4	3	2	1	0
PITHL1	PITHL17	PITHL16	0	PITHL14	PITHL13	0	PITHL11	PITHL10

Address: F0023H After reset: 00H R/W

Symbol	7	6	5	4	3	2	1	0
PITHL3	0	0	0	0	0	0	0	PITHL30

Address: F0024H After reset: 00H R/W

Symbol	7	6	5	4	3	2	1	0
PITHL4	0	0	0	0	PITHL43	0	0	0

Address: F0025H After reset: 00H R/W

Symbol	7	6	5	4	3	2	1	0
PITHL5	0	0	0	PITHL54	PITHL53	PITHL52	0	PITHL50

Address: F0026H After reset: 00H R/W

Symbol	7	6	5	4	3	2	1	0
PITHL6	0	0	0	0	PITHL63	PITHL62	PITHL61	PITHL60

Address: F0027H After reset: 00H R/W

Symbol	7	6	5	4	3	2	1	0
PITHL7	PITHL77	PITHL76	PITHL75	0	PITHL73	0	PITHL71	PITHL70

Address: F002AH After reset: 00H R/W

Symbol	7	6	5	4	3	2	1	0
PITHL10	PITHL107	0	0	0	0	0	0	0

Address: F002CH After reset: 00H R/W

Symbol	7	6	5	4	3	2	1	0
PITHL12	0	0	PITHL125	0	0	0	0	0

Address: F002FH After reset: 00H R/W

Symbol	7	6	5	4	3	2	1	0
PITHL15	0	0	0	0	PITHL153	PITHL152	0	PITHL150

PITHLmn	Selection of the input buffer threshold for Pmn pins (m = 1, 3 to 7, 10, 12, 15; n = 0 to 7)
0	Schmitt1 input
1	Schmitt3 input

PIMmn	PITHLmn	Selection of the input buffer threshold for Pmn pins (m = 1, 3 to 7, 10, 12, 15; n = 0 to 7)
0	0	Schmitt1 input
0	1	Schmitt3 input
1	0	TTL input
1	1	Setting prohibited

Caution Be sure to set bits for pins that are not present to their initial values.

4.3.9 Peripheral I/O redirection register 0 (PIOR0)

This register is used to specify whether to enable or disable the peripheral I/O redirect function.

PIOR0 enables or disables redirection of the timer array unit functions; that is, it specifies which I/O port is assigned to each input pin of timer array unit 0.

This register can be set by an 8-bit memory manipulation instruction.

Reset signal generation clears this register to 00H.

Figure 4-82. Format of Peripheral I/O Redirection Register 0 (PIOR0)

Address: F0016H After reset: 00H R/W

Symbol	7	6	5	4	3	2	1	0
PIOR0	PIOR07	PIOR06	PIOR05	PIOR04	PIOR03	PIOR02	PIOR01	PIOR00

Bit	Function	100-pin		80-pin		64-pin		48-pin	
		Setting value		Setting value		Setting value		Setting value	
		0	1	0	1	0	1	0	1
PIOR07	TI07	P120	P44	P120	P44	P120	—	P120	—
PIOR06	TI06	P14	P02	P14	P02	P14	—	P14	—
PIOR05	TI05	P15	P00	P15	P00	P15	P00	P15	P00
PIOR04	TI04	P13	P01	P13	P01	P13	—	P13	—
PIOR03	TI03	P125	P127	P125	—	P125	—	P125	—
PIOR02	TI02	P16	P67	P16	P67	P16	—	P16	—
PIOR01	TI01	P30	P126	P30	P126	P30	—	P30	—
PIOR00	TI00	P17	P66	P17	P66	P17	—	P17	—

Caution The 32-, 30-, and 20-pin products do not have the PIOR0 register.

4.3.10 Peripheral I/O redirection register 1 (PIOR1)

This register is used to specify whether to enable or disable the peripheral I/O redirect function.

PIOR1 enables or disables redirection of the timer array unit functions; that is, it specifies which I/O port is assigned to each output pin of timer array unit 0.

This register can be set by an 8-bit memory manipulation instruction.

Reset signal generation clears this register to 00H.

Figure 4-83. Format of Peripheral I/O Redirection Register 1 (PIOR1)

Address: F0017H After reset: 00H R/W

Symbol	7	6	5	4	3	2	1	0
PIOR1	PIOR17	PIOR16	PIOR15	PIOR14	PIOR13	PIOR12	PIOR11	PIOR10

Bit	Function	100-pin		80-pin		64-pin		48-pin	
		Setting value		Setting value		Setting value		Setting value	
		0	1	0	1	0	1	0	1
PIOR17	TO07	P120	P44	P120	P44	P120	—	P120	—
PIOR16	TO06	P14	P02	P14	P02	P14	—	P14	—
PIOR15	TO05	P15	P00	P15	P00	P15	P00	P15	P00
PIOR14	TO04	P13	P01	P13	P01	P13	—	P13	—
PIOR13	TO03	P125	P127	P125	—	P125	—	P125	—
PIOR12	TO02	P16	P67	P16	P67	P16	—	P16	—
PIOR11	TO01	P30	P126	P30	P126	P30	—	P30	—
PIOR10	TO00	P17	P66	P17	P66	P17	—	P17	—

Caution The 32-, 30-, and 20-pin products do not have the PIOR1 register.

4.3.11 Peripheral I/O redirection register 2 (PIOR2)

This register is used to specify whether to enable or disable the peripheral I/O redirect function.

PIOR2 enables or disables redirection of the timer array unit functions; that is, it specifies which I/O port is assigned to each input pin of timer array unit 1.

This register can be set by an 8-bit memory manipulation instruction.

Reset signal generation clears this register to 00H.

Figure 4-84. Format of Peripheral I/O Redirection Register 2 (PIOR2)

Address: F0018H After reset: 00H R/W

Symbol	7	6	5	4	3	2	1	0
PIOR2	PIOR27	PIOR26	PIOR25	PIOR24	PIOR23	PIOR22	PIOR21	PIOR20

Bit	Function	100-pin		80-pin	
		Setting value		Setting value	
		0	1	0	1
PIOR27	TI17	P71	P57	P71 Note 1	P57 Note 1
PIOR26	TI16	P32	P65	P32 Note 1	P65 Note 1
PIOR25	TI15	P70	P56	P70 Note 1	P56 Note 1
PIOR24	TI14	P31	P64	P31 Note 1	P64 Note 1
PIOR23	TI13	P10	P55	P10 Note 2	P55 Note 2
PIOR22	TI12	P11	P46	P11 Note 2	P46 Note 2
PIOR21	TI11	P12	P54	P12 Note 2	P54 Note 2
PIOR20	TI10	P41	P45	P41 Note 2	P45 Note 2

Notes 1. Group E products only

2. Products of Groups B to E only

Caution The 64-, 48-, 32-, 30-, and 20-pin products do not have the PIOR2 register.

4.3.12 Peripheral I/O redirection register 3 (PIOR3)

This register is used to specify whether to enable or disable the peripheral I/O redirect function.

PIOR3 enables or disables redirection of the timer array unit functions; that is, it specifies which I/O port is assigned to each output pin of timer array unit 1.

This register can be set by an 8-bit memory manipulation instruction.

Reset signal generation clears this register to 00H.

Figure 4-85. Format of Peripheral I/O Redirection Register 3 (PIOR3)

Address: F0019H After reset: 00H R/W

Symbol	7	6	5	4	3	2	1	0
PIOR3	PIOR37	PIOR36	PIOR35	PIOR34	PIOR33	PIOR32	PIOR31	PIOR30

Bit	Function	100-pin		80-pin	
		Setting value		Setting value	
		0	1	0	1
PIOR37	TO17	P71	P57	P71 Note 1	P57 Note 1
PIOR36	TO16	P32	P65	P32 Note 1	P65 Note 1
PIOR35	TO15	P70	P56	P70 Note 1	P56 Note 1
PIOR34	TO14	P31	P64	P31 Note 1	P64 Note 1
PIOR33	TO13	P10	P55	P10 Note 2	P55 Note 2
PIOR32	TO12	P11	P46	P11 Note 2	P46 Note 2
PIOR31	TO11	P12	P54	P12 Note 2	P54 Note 2
PIOR30	TO10	P41	P45	P41 Note 2	P45 Note 2

Notes 1. Group E products only

2. Products of Groups B to E only

Caution The 64-, 48-, 32-, 30-, and 20-pin products do not have the PIOR3 register.

4.3.13 Peripheral I/O redirection register 4 (PIOR4)

This register is used to specify whether to enable or disable the peripheral I/O redirect function.

PIOR4 enables or disables redirection of the serial communication functions; that is, it specifies which I/O port is assigned to each serial data I/O pin of CAN, serial data I/O pin of LIN, serial data I/O pin of the serial array unit, clock I/O pin, and slave select input pin.

This register can be set by an 8-bit memory manipulation instruction.

Reset signal generation clears this register to 00H.

<R> Bit 7 is read-only. The other bits can be read or written to.

Figure 4-86. Format of Peripheral I/O Redirection Register 4 (PIOR4)

Address: F001AH After reset: 00H R/W

Symbol	7	6	5	4	3	2	1	0
PIOR4	0	PIOR46	PIOR45	PIOR44	PIOR43	PIOR42	PIOR41	PIOR40

Bit	Function	100-pin		80-pin		64-pin		48-pin		32-pin	
		Setting value		Setting value		Setting value		Setting value		Setting value	
		0	1	0	1	0	1	0	1	0	1
PIOR46	CRxD0	P11	P73	P11 Note 1	P73 Note 1	P11 Note 1	P73 Note 1	P11 Note 1	P73 Note 1	P11 Note 2	—
	CTxD0	P10	P72	P10 Note 1	P72 Note 1	P10 Note 1	P72 Note 1	P10 Note 1	P72 Note 1	P10 Note 2	—
PIOR45	LRxD1	P11	P107	P11 Note 3	—	P11 Note 3	—	P11 Note 3	—	Use prohibited	
	LTxD1	P10	P106	P10 Note 3	—	P10 Note 3	—	P10 Note 3	—		
PIOR44	LRxD0	P14	P43	P14	P43	P14	P43	P14	—	P14	—
	LTxD0	P13	P42	P13	P42	P13	P42	P13	—	P13	—
PIOR43	SI11/ SDA11	P70	P152 Note 6	P70 Note 4	—	P70 Note 4	—	P70 Note 4	—	Use prohibited	
	SO11	P72	P151	P72 Note 4	—	P72 Note 4	—	P72 Note 4	—		
	SCL11/ $\overline{\text{SCK11}}$	P71	P153 Note 6	P71 Note 4	—	P71 Note 4	—	P71 Note 4	—		
	$\overline{\text{SSI11}}$	P73	P150	P73 Note 4	—	P73 Note 4	—	P73 Note 4	—		
PIOR42	SI10/ SDA10/ RxD1	P11	P75 Note 6	P11 Note 4	P75 Note 4, 6	P11 Note 4	P75 Note 4, 6	P11 Note 4	—	P11 Note 5	—
	SO10/ TxD1	P12	P74	P12 Note 4	P74 Note 4	P12 Note 4	P74 Note 4	P12 Note 4	—	P12 Note 5	—
	SCL10/ $\overline{\text{SCK10}}$	P10	P76 Note 6	P10 Note 4	P76 Note 4, 6	P10 Note 4	P76 Note 4, 6	P10 Note 4	—	P10 Note 5	—
	$\overline{\text{SSI10}}$	P54	P77	P54 Note 4	P77 Note 4	—	P77 Note 4	—	—	—	—
PIOR41	SI01/ SDA01	P13	P53 Note 6	P13	P53 Note 6	P13	P53 Note 6	P13	—	P13	—
	SO01	P120	P51	P120	P51	P120	P51	P120	—	P120	—
	SCL01/ $\overline{\text{SCK01}}$	P14	P52 Note 6	P14	P52 Note 6	P14	P52 Note 6	P14	—	P14	—
	$\overline{\text{SSI01}}$	P125	P50	P125	P50	P125	P50	P125	—	P125	—
PIOR40	SI00/ SDA00/ RxD0	P16	P61	P16	P61	P16	P61	P16	P61	P16	P61
	SO00/ TxD0	P15	P62	P15	P62	P15	P62	P15	P62	P15	P62
	SCL00/ $\overline{\text{SCK00}}$	P17	P60	P17	P60	P17	P60	P17	P60	P17	P60
	$\overline{\text{SSI00}}$	P30	P63	P30	P63	P30	P63	P30	P63	P30	P63

Notes 1. Products of Groups C to E only
2. Products of Groups C and D only
3. Group E products only
4. Products of Groups B to E only
5. Products of Groups B to D only
6. The simplified IIC function (SDA and SCL) cannot be used when PIOR is 1.

Cautions 1. The 30- and 20-pin products do not have the PIOR4 register.
2. Set the bit the use of which is prohibited to 0.

4.3.14 Peripheral I/O redirection register 5 (PIOR5)

This register is used to specify whether to enable or disable the peripheral I/O redirect function.

PIOR5 enables or disables redirection of the external interrupt input and key interrupt input; that is, it specifies which I/O port is assigned to each external interrupt input pin or key interrupt input pin.

This register can be set by an 8-bit memory manipulation instruction.

Bits 7 to 4 and 1 are read-only because no functions are assigned to them. The other bits can be read or written to.

After reset cancellation, this register can always be read or written to.

Any reset source clears this register to 00H.

Figure 4-87. Format of Peripheral I/O Redirection Register 5 (PIOR5)

Address: F001BH After reset: 00H R/W

Symbol	7	6	5	4	3	2	1	0
PIOR5	0	0	0	0	PIOR53	PIOR52	0	PIOR50

Bit	Function	100-pin		80-pin		64-pin		48-pin		32-pin		30-pin		20-pin	
		Setting value		Setting value		Setting value		Setting value		Setting value		Setting value		Setting value	
		0	1	0	1	0	1	0	1	0	1	0	1	0	1
PIOR53	INTP3	P17	P50	P17	P50	P17	P50	P17	—	P17	—	P17	—	P17	—
PIOR52	INTP2	P30	P31	P30	P31	P30	P31	P30	P31	P30	—	P30	—	P30	—
PIOR50	KR7	P77	—	P77	—	P77	P96	—	P92	—	—	—	P87	—	—
	KR6	P76	—	P76	—	P76	P95	—	P91	—	—	—	P86	—	—
	KR5	P75	—	P75	—	P75	P94	—	P90	—	P85	—	P85	—	—
	KR4	P74	—	P74	—	P74	P93	—	P87	—	P84	—	P84	—	—
	KR3	P73	—	P73	—	P73	P92	P73	P86	—	P83	—	P83	—	—
	KR2	P72	—	P72	—	P72	P91	P72	P85	—	P82	—	P82	—	—
	KR1	P71	—	P71	—	P71	P90	P71	P84	—	P81	—	P81	—	P81
	KR0	P70	—	P70	—	P70	P87	P70	P83	—	P80	—	P80	—	P80

4.3.15 Peripheral I/O redirection register 6 (PIOR6)

This register is used to specify whether to enable or disable the peripheral I/O redirect function.

PIOR6 enables or disables redirection of the SNOOZE status output functions; that is, it specifies which I/O port is assigned to each SNOOZE status output pin.

This register can be set by an 8-bit memory manipulation instruction.

After reset cancellation, this register can always be read or written to.

Any reset source clears this register to 00H.

Figure 4-88. Format of Peripheral I/O Redirection Register 6 (PIOR6)

Address: F001CH After reset: 00H R/W

Symbol	7	6	5	4	3	2	1	0
PIOR6	PIOR67	PIOR66	PIOR65	PIOR64	PIOR63	PIOR62	PIOR61	PIOR60

Bit	Function	100-pin		80-pin	
		Setting value		Setting value	
		0	1	0	1
PIOR67	SNZOUT7	P73	P154	P73	—
PIOR66	SNZOUT6	P72	P155	P72	—
PIOR65	SNZOUT5	P71	P156	P71	—
PIOR64	SNZOUT4	P70	P157	P70	—
PIOR63	SNZOUT3	P12	P64	P12	P64
PIOR62	SNZOUT2	P41	P65	P41	P65
PIOR61	SNZOUT1	P125	P56	P125	P56
PIOR60	SNZOUT0	P30	P57	P30	P57

Caution The 64-, 48-, 32-, 30-, and 20-pin products do not have the PIOR6 register.

4.3.16 Peripheral I/O redirection register 7 (PIOR7)

This register is used to specify whether to enable or disable the peripheral I/O redirect function.

PIOR7 enables or disables redirection of the timer RD I/O functions; that is, it specifies which I/O port is assigned to each I/O pin of timer RD0.

This register can be set by an 8-bit memory manipulation instruction.

Bits 7 to 4 and 2 are read-only. The other bits can be read or written to.

After reset cancellation, this register can always be read or written to.

Any reset source clears this register to 00H.

Figure 4-89. Format of Peripheral I/O Redirection Register 7 (PIOR7)

Address: F001DH After reset: 00H R/W

Symbol	7	6	5	4	3	2	1	0
PIOR7	0	0	0	0	PIOR73	0	PIOR71	PIOR70

Bit	Function	100-pin		80-pin		64-pin		48-pin		32-pin		30-pin		20-pin	
		Setting value		Setting value		Setting value		Setting value		Setting value		Setting value		Setting value	
		0	1	0	1	0	1	0	1	0	1	0	1	0	1
PIOR73	TRDIOD0	P120	P12	P120	P12	P120	P12	P120	P12	P120	P12	P120	P12	P120	—
PIOR71	TRDIOB0	P125	P11	P125	P11	P125	P11	P125	P11	P125	P11	P125	P11	P125	—
PIOR70	TRDIOA0/ TRDCLK0	P13	P15	P13	P15	P13	P15	P13	P15	P13	P15	P13	P15	P13	P15

4.3.17 Peripheral I/O redirection register 8 (PIOR8)

This register is used to specify whether to enable or disable the peripheral I/O redirect function.

PIOR8 enables or disables redirection of the real-time clock correction clock (1 Hz) output function; that is, it specifies which I/O port is assigned to the real-time clock correction clock (1 Hz) output pin.

This register can be set by an 8-bit memory manipulation instruction.

Bits 7 to 1 are read-only. Bit 0 can be read or written to.

After reset cancellation, this register can always be read or written to.

Any reset source clears this register to 00H.

Figure 4-90. Format of Peripheral I/O Redirection Register 8 (PIOR8)

Address: F001EH After reset: 00H R/W

Symbol	7	6	5	4	3	2	1	0
PIOR8	0	0	0	0	0	0	0	PIOR80

Bit	Function	100-pin	
		Setting value	
		0	1
PIOR87	—	—	—
PIOR86	—	—	—
PIOR85	—	—	—
PIOR84	—	—	—
PIOR83	—	—	—
PIOR82	—	—	—
PIOR81	—	—	—
PIOR80	RTC1HZ	P15	P03

Caution The 80-, 64-, 48-, 32-, 30-, and 20-pin products do not have the PIOR8 register.

4.3.18 Port output slew rate register (PSRSEL)

This register is used to select the slew rate for the port output.
It can be set by a 1-bit or 8-bit memory manipulation instruction.
Any reset source clears this register to 00H.

Caution The slew rate of target pins including the alternate functions is changed.

Figure 4-91. Format of Port Output Slew Rate Register (PSRSEL)

Address: F0220H After reset: 00H R/W

Symbol	7	6	5	4	3	2	1	0
PSRSEL	0	0	PSR140	PSR14	PSR120	PSR30	PSR12	PSR10

PSR140	Control target output port: P140/PCLBUZ0
0	Normal slew rate
1	Special slew rate (slower than normal slew rate)

Caution PSR140 is not provided in the 32-, 30-, or 20-pin products.

PSR14	Control target output port: P14/$\overline{\text{SCK01}}$/SCL01/TO06/TRDIOC0
0	Normal slew rate
1	Special slew rate (slower than normal slew rate)

PSR120	Control target output port: P120/SO01/TO07/TRDIOD0
0	Normal slew rate
1	Special slew rate (slower than normal slew rate)

PSR30	Control target output port: P30/TO01/TRDIOD1/SNZOUT0
0	Normal slew rate
1	Special slew rate (slower than normal slew rate)

PSR12	Control target output port: P12/SO10/TO11/(TRDIOD0)/TXD1/SNZOUT3
0	Normal slew rate
1	Special slew rate (slower than normal slew rate)

<R> **Caution PSR12 is not provided in the Group A products.**

PSR10	Control target output port: P10/$\overline{\text{SCK10}}$/TO13/TRJO0/SCL10/LTXD1/CTXD0
0	Normal slew rate
1	Special slew rate (slower than normal slew rate)

<R> **Caution PSR10 is not provided in the Group A products.**

4.3.19 SNOOZE status output control register 0 (PSNZCNT0)

This register is used to output signals indicating that the SNOOZE mode has been entered through external pins.
It can be set by a 1-bit or 8-bit memory manipulation instruction.
Bits 7, 6, 3, and 2 are read-only because no functions are assigned to them. The other bits can be read or written to.
Any reset source clears this register to 00H.

Cautions 1. Set the target port pin to the output mode and the output latch to 0 before using the SNOOZE status output function.
2. Stop the output from peripheral functions assigned to output-enabled port pins and make the register settings at the time of SNZOUT output.
3. Set WUTMMCK0 to 1 at the time of SNZOUT output.

Figure 4-92. Format of SNOOZE Status Output Control Register 0 (PSNZCNT0)

Address: F0222H After reset: 00H R/W

Symbol	7	6	5	4	3	2	1	0
PSNZCNT0	0	0	SNZACT1	OUTEN1	0	0	SNZACT0	OUTEN0

SNZACT1	SNZOUT1 active level
0	When PIOR61 = 0: Active level of SNOOZE status output to P125 is "H". When PIOR61 = 1: Active level of SNOOZE status output to P56 is "H" (only in 100-pin or 80-pin products).
1	When PIOR61 = 0: Active level of SNOOZE status output to P125 is "L". When PIOR61 = 1: Active level of SNOOZE status output to P56 is "L" (only in 100-pin or 80-pin products).

OUTEN1	SNZOUT1 enable/disable
0	When PIOR61 = 0: SNOOZE status output to P125 is disabled. When PIOR61 = 1: SNOOZE status output to P56 is disabled (only in 100-pin or 80-pin products).
1	When PIOR61 = 0: SNOOZE status output to P125 is enabled. When PIOR61 = 1: SNOOZE status output to P56 is enabled (only in 100-pin or 80-pin products).

SNZACT0	SNZOUT0 active level
0	When PIOR60 = 0: Active level of SNOOZE status output to P30 is "H". When PIOR60 = 1: Active level of SNOOZE status output to P57 is "H" (only in 100-pin or 80-pin products).
1	When PIOR60 = 0: Active level of SNOOZE status output to P30 is "L". When PIOR60 = 1: Active level of SNOOZE status output to P57 is "L" (only in 100-pin or 80-pin products).

OUTEN0	SNZOUT0 enable/disable
0	When PIOR60 = 0: SNOOZE status output to P30 is disabled. When PIOR60 = 1: SNOOZE status output to P57 is disabled (only in 100-pin or 80-pin products).
1	When PIOR60 = 0: SNOOZE status output to P30 is enabled. When PIOR60 = 1: SNOOZE status output to P57 is enabled (only in 100-pin or 80-pin products).

4.3.20 SNOOZE status output control register 1 (PSNZCNT1)

This register is used to output signals indicating that the SNOOZE mode has been entered through external pins.
It can be set by a 1-bit or 8-bit memory manipulation instruction.
Bits 7, 6, 3, and 2 are read-only because no functions are assigned to them. The other bits can be read or written to.
Any reset source clears this register to 00H.

Cautions 1. Set the target port pin to the output mode and the output latch to 0 before using the SNOOZE status output control register.
2. Stop the output from peripheral functions assigned to output-enabled port pins and make the register settings at the time of SNZOUT output.
3. Set WUTMMCK0 to 1 at the time of SNZOUT output.

Figure 4-93. Format of SNOOZE Status Output Control Register 1 (PSNZCNT1)

Address: F0223H After reset: 00H R/W

Symbol	7	6	5	4	3	2	1	0
PSNZCNT1	0	0	SNZACT3	OUTEN3	0	0	SNZACT2	OUTEN2

SNZACT3	SNZOUT3 active level
0	When PIOR63 = 0: Active level of SNOOZE status output to P12 is "H". When PIOR63 = 1: Active level of SNOOZE status output to P64 is "H" (only in 100-pin or 80-pin products).
1	When PIOR63 = 0: Active level of SNOOZE status output to P12 is "L". When PIOR63 = 1: Active level of SNOOZE status output to P64 is "L" (only in 100-pin or 80-pin products).

OUTEN3	SNZOUT3 enable/disable
0	When PIOR63 = 0: SNOOZE status output to P12 is disabled. When PIOR63 = 1: SNOOZE status output to P64 is disabled (only in 100-pin or 80-pin products).
1	When PIOR63 = 0: SNOOZE status output to P12 is enabled. When PIOR63 = 1: SNOOZE status output to P64 is enabled (only in 100-pin or 80-pin products).

SNZACT2	SNZOUT2 active level
0	When PIOR62 = 0: Active level of SNOOZE status output to P41 is "H". When PIOR62 = 1: Active level of SNOOZE status output to P65 is "H" (only in 100-pin or 80-pin products).
1	When PIOR62 = 0: Active level of SNOOZE status output to P41 is "L". When PIOR62 = 1: Active level of SNOOZE status output to P65 is "L" (only in 100-pin or 80-pin products).

OUTEN2	SNZOUT2 enable/disable
0	When PIOR62 = 0: SNOOZE status output to P41 is disabled. When PIOR62 = 1: SNOOZE status output to P65 is disabled (only in 100-pin or 80-pin products).
1	When PIOR62 = 0: SNOOZE status output to P41 is enabled. When PIOR62 = 1: SNOOZE status output to P65 is enabled (only in 100-pin or 80-pin products).

Caution The 20-pin products do not have the PSNZCNT1 register.

4.3.21 SNOOZE status output control register 2 (PSNZCNT2)

This register is used to output signals indicating that the SNOOZE mode has been entered through external pins.
It can be set by a 1-bit or 8-bit memory manipulation instruction.
Bits 7, 6, 3, and 2 are read-only because no functions are assigned to them. The other bits can be read or written to.
Any reset source clears this register to 00H.

Cautions 1. Set the target port pin to the output mode and the output latch to 0 before using the SNOOZE status output control register.
2. Stop the output from peripheral functions assigned to output-enabled port pins and make the register settings at the time of SNZOUT output.
3. Set WUTMMCK0 to 1 at the time of SNZOUT output.

Figure 4-94. Format of SNOOZE Status Output Control Register 2 (PSNZCNT2)

Address: F0224H After reset: 00H R/W

Symbol	7	6	5	4	3	2	1	0
PSNZCNT2	0	0	SNZACT5	OUTEN5	0	0	SNZACT4	OUTEN4

SNZACT5	SNZOUT5 active level
0	When PIOR65 = 0: Active level of SNOOZE status output to P71 is "H". When PIOR65 = 1: Active level of SNOOZE status output to P156 is "H" (only in 100-pin products).
1	When PIOR65 = 0: Active level of SNOOZE status output to P71 is "L". When PIOR65 = 1: Active level of SNOOZE status output to P156 is "L" (only in 100-pin products).

OUTEN5	SNZOUT5 enable/disable
0	When PIOR65 = 0: SNOOZE status output to P71 is disabled. When PIOR65 = 1: SNOOZE status output to P156 is disabled (only in 100-pin products).
1	When PIOR65 = 0: SNOOZE status output to P71 is enabled. When PIOR65 = 1: SNOOZE status output to P156 is enabled (only in 100-pin products).

SNZACT4	SNZOUT4 active level
0	When PIOR64 = 0: Active level of SNOOZE status output to P70 is "H". When PIOR64 = 1: Active level of SNOOZE status output to P157 is "H" (only in 100-pin products).
1	When PIOR64 = 0: Active level of SNOOZE status output to P70 is "L". When PIOR64 = 1: Active level of SNOOZE status output to P157 is "L" (only in 100-pin products).

OUTEN4	SNZOUT4 enable/disable
0	When PIOR64 = 0: SNOOZE status output to P70 is disabled. When PIOR64 = 1: SNOOZE status output to P157 is disabled (only in 100-pin products).
1	When PIOR64 = 0: SNOOZE status output to P70 is enabled. When PIOR64 = 1: SNOOZE status output to P157 is enabled (only in 100-pin products).

Caution The 20-pin, 30-pin, and 32-pin products do not have the PSNZCNT2 register.

4.3.22 SNOOZE status output control register 3 (PSNZCNT3)

This register is used to output signals indicating that the SNOOZE mode has been entered through external pins.
It can be set by a 1-bit or 8-bit memory manipulation instruction.
Bits 7, 6, 3, and 2 are read-only because no functions are assigned to them. The other bits can be read or written to.
Any reset source clears this register to 00H.

Cautions 1. Set the target port pin to the output mode and the output latch to 0 before using the SNOOZE status output control register.
2. Stop the output from peripheral functions assigned to output-enabled port pins and make the register settings at the time of SNZOUT output.
3. Set WUTMMCK0 to 1 at the time of SNZOUT output.

Figure 4-95. Format of SNOOZE Status Output Control Register 3 (PSNZCNT3)

Address: F0225H After reset: 00H R/W

Symbol	7	6	5	4	3	2	1	0
PSNZCNT3	0	0	SNZACT7	OUTEN7	0	0	SNZACT6	OUTEN6

SNZACT7	SNZOUT7 active level
0	When PIOR67 = 0: Active level of SNOOZE status output to P73 is "H". When PIOR67 = 1: Active level of SNOOZE status output to P154 is "H" (only in 100-pin products).
1	When PIOR67 = 0: Active level of SNOOZE status output to P73 is "L". When PIOR67 = 1: Active level of SNOOZE status output to P154 is "L" (only in 100-pin products).

OUTEN7	SNZOUT7 enable/disable
0	When PIOR67 = 0: SNOOZE status output to P73 is disabled. When PIOR67 = 1: SNOOZE status output to P154 is disabled (only in 100-pin products).
1	When PIOR67 = 0: SNOOZE status output to P73 is enabled. When PIOR67 = 1: SNOOZE status output to P154 is enabled (only in 100-pin products).

SNZACT6	SNZOUT6 active level
0	When PIOR66 = 0: Active level of SNOOZE status output to P72 is "H". When PIOR66 = 1: Active level of SNOOZE status output to P155 is "H" (only in 100-pin products).
1	When PIOR66 = 0: Active level of SNOOZE status output to P72 is "L". When PIOR66 = 1: Active level of SNOOZE status output to P155 is "L" (only in 100-pin products).

OUTEN6	SNZOUT6 enable/disable
0	When PIOR66 = 0: SNOOZE status output to P72 is disabled. When PIOR66 = 1: SNOOZE status output to P155 is disabled (only in 100-pin products).
1	When PIOR66 = 0: SNOOZE status output to P72 is enabled. When PIOR66 = 1: SNOOZE status output to P155 is enabled (only in 100-pin products).

Caution The 20-pin, 30-pin, and 32-pin products do not have the PSNZCNT3 register.

4.3.23 Port mode select register (PMS)

This register is provided to support IEC60730.

It selects whether to read the output latch value or the pin output level when the port is set to output mode.

This register can be set by a 1-bit or 8-bit memory manipulation instruction.

Any reset source clears this register to 00H.

Figure 4-96. Port Mode Select Register (PMS)

Address: F0077H After reset: 00H R/W

<R>

Symbol	7	6	5	4	3	2	1	<0>
PMS	0	0	0	0	0	0	0	PMS0

PMS0	Data read from Pmn when PMmn = 0 (m = 0 to 15; n = 0 to 7)
0	Initial setting. When PMmn = 0 (output mode), the value of Pmn (output latch) is read.
1	When PMmn = 0 (output mode), the pin level is read.

PMmn	PMS0	Data read from Pmn
0	0	Value of the Pmn register (output latch)
0	1	Pin output level
1	0	Pin input level
1	1	Pin input level

4.4 Port Function Operations

Port operations differ depending on whether the input or output mode is set, as shown below.

4.4.1 Writing to I/O port

(1) Output mode

A value is written to the output latch by a transfer instruction, and the output latch contents are output from the pin.
Once data is written to the output latch, it is retained until data is written to the output latch again.
The data of the output latch is cleared when a reset signal is generated.

(2) Input mode

A value is written to the output latch by a transfer instruction, but since the output buffer is off, the pin status does not change. Accordingly, data can be written in byte units to a port having both input and output pins.
Once data is written to the output latch, it is retained until data is written to the output latch again.
The data of the output latch is cleared when a reset signal is generated.

4.4.2 Reading from I/O port

(1) Output mode

The output latch contents are read by a transfer instruction. The output latch contents do not change.
When the PMS0 bit in the port mode select register is set to 1, the pin level can be read from Pxx.

(2) Input mode

The pin status is read by a transfer instruction. The output latch contents do not change.

4.4.3 Operations on I/O port

(1) Output mode

An operation is performed on the output latch contents, and the result is written to the output latch. The output latch contents are output from the pins.
Once data is written to the output latch, it is retained until data is written to the output latch again.
The data of the output latch is cleared when a reset signal is generated.

(2) Input mode

The pin level is read and an operation is performed on its contents. The result of the operation is written to the output latch, but since the output buffer is off, the pin status does not change. Accordingly, data can be written in byte units to a port having both input and output pins.
The data of the output latch is cleared when a reset signal is generated.

4.4.4 Connecting to external device with different potential (3 V)

<R> Ports 1, 6, 7, and 12 are possible to connect an external device operating on a different potential (3 V) when operating at VDD = 4.0 V to 5.5 V by switching I/O buffers with the port input mode register (PIMxx) and port output mode register (POMxx).

When receiving input from an external device with a different potential (3 V), set the port input mode registers 1 and 7 (PIM1, PIM7) on a bit-by-bit basis to enable normal input(CMOS)/TTL input buffer switching.

When outputting data to an external device with a different potential (3 V), set the port output mode registers 1, 6, 7, and 12 (POM1, POM6, POM7, and POM12) on a bit-by-bit basis to enable switching the output buffer to the N-ch open-drain, it is possible to cope with different potentials.

(1) Setting procedure when using I/O pins of UART0, UART1, CSI00, CSI01, CSI10, and CSI11 functions

(a) Use as 3 V input port

<1> If pull-up is needed, externally pull up the pin to be used (on-chip pull-up resistor cannot be used).

In case of UART0:	P16
In case of UART1:	P11
In case of CSI00:	P16, P17
In case of CSI01:	P13, P14
In case of CSI10:	P11, P10
In case of CSI11:	P70, P71

<2> After reset release, the port mode is the input mode (Hi-Z).

<3> Set the corresponding bit of the PIM1 and PIM7 registers to 1 to switch to the TTL input buffer.

<4> V_{IH}/V_{IL} operates on 3 V operating voltage.

(b) Use as 3 V output port

<1> Pull up externally the pin to be used (on-chip pull-up resistor cannot be used).

In case of UART0:	P15
In case of UART1:	P12
In case of CSI00:	P15, P17
In case of CSI01:	P14, P120
In case of CSI10:	P10, P12
In case of CSI11:	P71, P72

<2> After reset release, the port mode is the input mode (Hi-Z).

<3> Set the output latch of the corresponding port to 1.

<4> Set the corresponding bit of the POM1, POM6, POM7, and POM12 registers to 1 to set the N-ch open-drain output (EV_{DD} tolerance) mode.

<5> Set the output mode by manipulating the PM1, PM6, PM7, and PM12 registers.
At this time, the output data is high level, so the pin is in the Hi-Z state.

<6> Communication is started by setting the serial array unit.

(2) Setting procedure when using I/O pins of simplified IIC00, IIC01, IIC10, and IIC11 functions

<1> Externally pull up the pin to be used (on-chip pull-up resistor cannot be used).

In case of simplified IIC00:	P16, P17
In case of simplified IIC01:	P13, P14
In case of simplified IIC10:	P10, P11
In case of simplified IIC11:	P70, P71

<2> After reset release, the port mode is the input mode (Hi-Z).

<3> Set the output latch of the corresponding port to 1.

<4> Set the corresponding bit of the POM1 and POM7 registers to 1 to set the N-ch open-drain output (EV_{DD} tolerance) mode.

<5> Set the corresponding bit of the PIM1 and PIM7 registers to 1 to switch to the TTL input buffer.

<6> Set the corresponding bit of the PM1 and PM7 registers to the output mode (data I/O is possible in the output mode).
At this time, the output data is high level, so the pin is in the Hi-Z state.

<7> Enable the operation of the serial array unit and set the mode to the simplified IIC mode.

4.5 Settings of Port Mode Register and Output Latch When Using Alternate Function

To use the alternate function of a port pin, set the port mode register, and output latch as shown in Table 4-29.

Table 4-29. Settings of Port Mode Register and Output Latch When Using Alternate Function (1/8)

Pin Name	Alternate Function		PIORXX	POMXX	PMCXX	PMXX	PXX	PIMXX	PITHLXX
	Function Name	I/O							
<R> P00	INTP9	Input	×	–	–	1	×	–	–
	(TI05)	Input	1	–	–	1	×	–	–
	(TO05)	Output	1	–	–	0	0	–	–
P01	(TI04)	Input	1	–	–	1	×	–	–
	(TO04)	Output	1	–	–	0	0	–	–
P02	(TI06)	Input	1	–	–	1	×	–	–
	(TO06)	Output	1	–	–	0	0	–	–
P03	(RTC1HZ)	Output	1	–	–	0	0	–	–
P10	TI13	Input	0	×	–	1	×	0	0/1
	TO13	Output	0	0	–	0	0	×	×
	TRJO0	Output	×	0	–	0	0	×	×
	$\overline{\text{SCK10}}$	Input	0	×	–	1	×	0/1	0/1
		Output	0	0/1	–	0	1	×	×
	SCL10	Output	0	0/1	–	0	1	×	×
	LTXD1	Output	0	0	–	0	1	×	×
	CTXD0	Output	0	0	–	0	1	×	×
P11	TI12	Input	0	×	–	1	×	0	0/1
	SI10	Input	0	×	–	1	×	0/1	0/1
	TO12	Output	0	0	–	0	0	×	×
	SDA10	I/O	0	1	–	0	1	0/1	0/1
	RXD1	Input	0	×	–	1	×	0/1	0/1
	LRXD1	Input	0	×	–	1	×	0	0/1
	CRXD0	Input	0	×	–	1	×	0	0/1
	(TRDIOB0)	Input	1	×	–	1	×	0	0/1
		Output	1	0	–	0	0	×	×

Remarks 1. ×: Don't care
PIORxx: Peripheral I/O redirection register
POMxx: Port output mode register
PMCxx: Port mode control register
PMxx: Port mode register
Pxx: Port output latch
<R> PIMxx: Port input mode register
<R> PITHLxx: Port input threshold control register

2. The relationship between pins and their alternate functions shown in this table indicates the relationship when a 100-pin product is used. In other products, alternate functions might be assigned to different pins, but even in this case, the PIORxx, POMxx, PMCxx, PMxx, and Pxx set in the same way.

3. Functions in parentheses in the above table can be assigned via settings in the peripheral I/O <R> redirection register (PIOR).

Table 4-29. Settings of Port Mode Register and Output Latch When Using Alternate Function (2/8)

Pin Name	Alternate Function		PIORXX	POMXX	PMCXX	PMXX	PXX	PIMXX	PITHLXX
	Function Name	I/O							
P12	TI11	Input	0	×	–	1	×	–	–
	INTP5	Input	×	×	–	1	×	–	–
	TO11	Output	0	0	–	0	0	–	–
	SO10	Output	0	0/1	–	0	1	–	–
	TXD1	Output	0	0/1	–	0	1	–	–
	SNZOUT3	Output	0	0	–	0	0	–	–
	(TRDIOD0)	Input	1	×	–	1	×	–	–
		Output	1	0	–	0	0	–	–
P13	TI04	Input	0	×	–	1	×	0	0/1
	SI01	Input	0	×	–	1	×	0/1	0/1
	TRDIOA0	Input	0	×	–	1	×	0	0/1
		Output	0	0	–	0	0	×	×
	TRDCLK0	Input	0	×	–	1	×	0	0/1
	TO04	Output	0	0	–	0	0	×	×
	SDA01	I/O	0	1	–	0	1	0/1	0/1
	LTXD0	Output	0	0	–	0	1	×	×
P14	TI06	Input	0	×	–	1	×	0	0/1
	TO06	Output	0	0	–	0	0	×	×
	TRDIOC0	Input	×	×	–	1	×	0	0/1
		Output	×	0	–	0	0	×	×
	$\overline{\text{SCK01}}$	Input	0	×	–	1	×	0/1	0/1
		Output	0	0/1	–	0	1	×	×
	SCL01	Output	0	0/1	–	0	1	×	×
	LRXD0	Input	0	×	–	1	×	0	0/1
P15	TI05	Input	0	×	–	1	×	–	–
	TO05	Output	0	0	–	0	0	–	–
	TRDIOA1	Input	×	×	–	1	×	–	–
		Output	×	0	–	0	0	–	–
	SO00	Output	0	0/1	–	0	1	–	–
	TXD0	Output	0	0/1	–	0	1	–	–
	RTC1HZ	Output	0	0	–	0	0	–	–
	(TRDIOA0)	Input	1	×	–	1	×	–	–
		Output	1	0	–	0	0	–	–
	(TRDCLK0)	Input	1	×	–	1	×	–	–

Remarks 1. ×: Don't care
PIORxx: Peripheral I/O redirection register
POMxx: Port output mode register
PMCxx: Port mode control register
PMxx: Port mode register
Pxx: Port output latch
<R> PIMxx: Port input mode register
<R> PITHLxx: Port input threshold control register

2. The relationship between pins and their alternate functions shown in this table indicates the relationship when a 100-pin product is used. In other products, alternate functions might be assigned to different pins, but even in this case, the PIORxx, POMxx, PMCxx, PMxx, and Pxx set in the same way.

3. Functions in parentheses in the above table can be assigned via settings in the peripheral I/O <R> redirection register (PIOR).

Table 4-29. Settings of Port Mode Register and Output Latch When Using Alternate Function (3/8)

Pin Name	Alternate Function	PIORXX	POMXX	PMCXX	PMXX	PXX	PIMXX	PITHLXX	
	Function Name	I/O							
P16	TI02	Input	0	×	–	1	×	0	0/1
	SI00	Input	0	×	–	1	×	0/1	0/1
	TRDIOC1	Input	×	×	–	1	×	0	0/1
		Output	×	0	–	0	0	×	×
	TO02	Output	0	0	–	0	0	×	×
	SDA00	I/O	0	1	–	0	1	0/1	0/1
	RXD0	Input	0	×	–	1	×	0/1	0/1
P17	TI00	Input	0	×	–	1	×	0	0/1
	INTP3	Input	0	×	–	1	×	0	0/1
	TRDIOB1	Input	×	×	–	1	×	0	0/1
		Output	×	0	–	0	0	×	×
	$\overline{\text{SCK00}}$	Input	0	×	–	1	×	0/1	0/1
		Output	0	0/1		0	1	×	×
	SCL00	Output	0	0/1	–	0	1	×	×
	TO00	Output	0	0	–	0	0	×	×
P30	TI01	Input	0	–	–	1	×	0	0/1
	INTP2	Input	0	–	–	1	×	0	0/1
	TRDIOD1	Input	×	–	–	1	×	0	0/1
		Output	×	–	–	0	0	×	×
	$\overline{\text{SSI00}}$	Input	0	–	–	1	×	0/1	0/1
	TO01	Output	0	–	–	0	0	×	×
	SNZOUT0	Output	0	–	–	0	0	×	×
P31	TI14	Input	0	–	–	1	×	–	–
	TO14	Output	0	–	–	0	0	–	–
	STOPST	Output	×	–	–	0	0	–	–
	(INTP2)	Input	1	–	–	1	×	–	–
P32	TI16	Input	0	–	–	1	×	–	–
	INTP7	Input	×	–	–	1	×	–	–
<R>	TO16	Output	0	–	–	0	0	–	–
<R> P33	ANI0	Input	×	–	–	1	×	–	–
	AV_{REFP}	Input	×	–	–	1	×	–	–
<R> P34	ANI1	Input	×	–	–	1	×	–	–
	AV_{REFM}	Input	×	–	–	1	×	–	–

Remarks 1. ×: Don't care
PIORxx: Peripheral I/O redirection register
POMxx: Port output mode register
PMCxx: Port mode control register
PMxx: Port mode register
Pxx: Port output latch
<R> PIMxx: Port input mode register
<R> PITHLxx: Port input threshold control register

2. The relationship between pins and their alternate functions shown in this table indicates the relationship when a 100-pin product is used. In other products, alternate functions might be assigned to different pins, but even in this case, the PIORxx, POMxx, PMCxx, PMxx, and Pxx set in the same way.

3. Functions in parentheses in the above table can be assigned via settings in the peripheral I/O <R> redirection register (PIOR).

Table 4-29. Settings of Port Mode Register and Output Latch When Using Alternate Function (4/8)

Pin Name	Alternate Function		PIORXX	POMXX	PMCXX	PMXX	PXX	PIMXX	PITHLXX
	Function Name	I/O							
P40	TOOL0	I/O	×	–	–	×	×	–	–
P41	TI10	Input	0	–	–	1	×	–	–
	TO10	Output	0	–	–	0	0	–	–
	TRJIO0	Input	×	–	–	1	×	–	–
		Output	×	–	–	0	0	–	–
	VCOUT0	Output	×	–	–	0	0	–	–
	SNZOUT2	Output	0	–	–	0	0	–	–
P42	(LTXD0)	Output	1	–	–	0	1	–	–
P43	(LRXD0)	Input	1	–	–	1	×	–	0/1
P44	(TI07)	Input	1	–	–	1	×	–	–
	(TO07)	Output	1	–	–	0	0	–	–
P45	(TI10)	Input	1	–	–	1	×	–	–
	(TO10)	Output	1	–	–	0	0	–	–
P46	(TI12)	Input	1	–	–	1	×	–	–
	(TO12)	Output	1	–	–	0	0	–	–
P47	INTP13	Input	×	–	–	1	×	–	–
P50	($\overline{\text{SSI01}}$)	Input	1	–	–	1	×	–	0/1
	(INTP3)	Input	1	–	–	1	×	–	0/1
P51	INTP11	Input	×	–	–	1	×	–	–
	(SO01)	Output	1	–	–	0	1	–	–
P52	($\overline{\text{SCK01}}$)	Input	1	–	–	1	×	–	0/1
		Output	1	–	–	0	1	–	×
	(STOPST)[Note]	Output	×	–	–	0	0	–	0/1
P53	INTP10	Input	×	–	–	1	×	–	0/1
	(SI01)	Input	1	–	–	1	×	–	0/1
<R> P54	$\overline{\text{SSI10}}$	Input	0	–	–	1	×	0/1	0/1
	(TI11)	Input	1	–	–	1	×	0	0/1
	(TO11)	Output	1	–	–	0	0	×	×
P55	(TI13)	Input	1	–	–	1	×	–	–
	(TO13)	Output	1	–	–	0	0	–	–
P56	(TI15)	Input	1	–	–	1	×	–	–
	(TO15)	Output	1	–	–	0	0	–	–
	(SNZOUT1)	Output	1	–	–	0	0	–	–
P57	(TI17)	Input	1	–	–	1	×	–	–
	(TO17)	Output	1	–	–	0	0	–	–
	(SNZOUT0)	Output	1	–	–	0	0	–	–

Note The STOPST function can be assigned via settings in the STOP status output control register (STPSTC).

Remarks 1. ×: Don't care
PIORxx: Peripheral I/O redirection register
POMxx: Port output mode register
PMCxx: Port mode control register
PMxx: Port mode register
Pxx: Port output latch
<R> PIMxx: Port input mode register
<R> PITHLxx: Port input threshold control register

Remarks 2. The relationship between pins and their alternate functions shown in this table indicates the relationship when a 100-pin product is used. In other products, alternate functions might be assigned to different pins, but even in this case, the PIORxx, POMxx, PMCxx, PMxx, and Pxx set in the same way.

3. Functions in parentheses in the above table can be assigned via settings in the peripheral I/O redirection register (PIOR).

<R>

Table 4-29. Settings of Port Mode Register and Output Latch When Using Alternate Function (5/8)

Pin Name	Alternate Function		PIORXX	POMXX	PMCXX	PMXX	PXX	PIMXX	PITHLXX
	Function Name	I/O							
P60	($\overline{\text{SCK00}}$)	Input	1	×	–	1	×	–	0/1
		Output	1	0	–	0	1	–	×
	(SCL00)	Output	1	0/1	–	0	1	–	×
P61	(SI00)	Input	1	×	–	1	×	–	0/1
	(SDA00)	I/O	1	1	–	0	1	–	0/1
	(RXD0)	Input	1	×	–	1	×	–	0/1
P62	SCLA0	I/O	×	1	–	0	0	0/1	0/1
	(SO00)	Output	1	0	–	0	1	×	×
	(TXD0)	Output	1	0	–	0	1	×	×
P63	SDAA0	I/O	×	1	–	0	0	0/1	0/1
	($\overline{\text{SSI00}}$)	Input	1	×	–	1	×	0	0/1
P64	(TI14)	Input	1	–	–	1	×	–	–
	(TO14)	Output	1	–	–	0	0	–	–
	(SNZOUT3)	Output	1	–	–	0	0	–	–
P65	(TI16)	Input	1	–	–	1	×	–	–
	(TO16)	Output	1	–	–	0	0	–	–
	(SNZOUT2)	Output	1	–	–	0	0	–	–
P66	(TI00)	Input	1	–	–	1	×	–	–
	(TO00)	Output	1	–	–	0	0	–	–
P67	(TI02)	Input	1	–	–	1	×	–	–
	(TO02)	Output	1	–	–	0	0	–	–
P70	ANI26	Input	×	×	1	1	×	×	×
	TI15	Input	0	×	0	1	×	0	0/1
	SI11	Input	0	×	0	1	×	0/1	0/1
	INTP8	Input	×	×	0	1	×	0	0/1
	TO15	Output	0	0	0	0	0	×	×
	KR0	Input	0	×	0	1	×	0	0/1
	SDA11	I/O	0	1	0	0	1	0/1	0/1
	SNZOUT4	Output	0	0	0	0	0	×	×

Remarks 1. ×: Don't care
PIORxx: Peripheral I/O redirection register
POMxx: Port output mode register
PMCxx: Port mode control register
PMxx: Port mode register
Pxx: Port output latch
<R> PIMxx: Port input mode register
<R> PITHLxx: Port input threshold control register

2. The relationship between pins and their alternate functions shown in this table indicates the relationship when a 100-pin product is used. In other products, alternate functions might be assigned to different pins, but even in this case, the PIORxx, POMxx, PMCxx, PMxx, and Pxx set in the same way.

3. Functions in parentheses in the above table can be assigned via settings in the peripheral I/O redirection register (PIOR).

<R>

Table 4-29. Settings of Port Mode Register and Output Latch When Using Alternate Function (6/8)

Pin Name	Alternate Function		PIORXX	POMXX	PMCXX	PMXX	PXX	PIMXX	PITHLXX
	Function Name	I/O							
P71	ANI27	Input	×	×	1	1	×	×	×
	TI17	Input	0	×	0	1	×	0	0/1
	INTP6	Input	×	×	0	1	×	0	0/1
	TO17	Output	0	0	0	0	0	×	×
	KR1	Input	0	×	0	1	×	0	0/1
	$\overline{\text{SCK11}}$	Input	0	×	0	1	×	0/1	0/1
		Output	0	0/1	0	0	1	×	×
	SCL11	Output	0	0/1	0	0	1	×	×
	SNZOUT5	Output	0	0	0	0	0	×	×
P72	ANI28	Input	×	×	1	1	×	–	–
	KR2	Input	0	×	0	1	×	–	–
	SO11	Output	0	0/1	0	0	1	–	–
	SNZOUT6	Output	0	0	0	0	0	–	–
	(CTXD0)	Output	1	0	0	0	1	–	–
P73	ANI29	Input	×	–	1	1	×	×	×
	KR3	Input	0	–	0	1	×	0	0/1
	$\overline{\text{SSI11}}$	Input	0	–	0	1	×	0/1	0/1
	SNZOUT7	Output	0	–	0	0	0	×	×
	(CRXD0)	Input	1	–	0	1	×	0	0/1
P74	ANI30	Input	×	–	1	1	×	–	–
	KR4	Input	0	–	0	1	×	–	–
	(SO10)	Output	1	–	0	0	1	–	–
	(TXD1)	Output	1	–	0	0	1	–	–
P75	KR5	Input	0	–	–	1	×	–	0/1
	(SI10)	Input	1	–	–	1	×	–	0/1
	(RXD1)	Input	1	–	–	1	×	–	0/1
P76	KR6	Input	0	–	–	1	×	–	0/1
	($\overline{\text{SCK10}}$)	Input	1	–	–	1	×	–	0/1
		Output	1	–	–	0	1	–	×
P77	INTP12	Input	×	–	–	1	×	–	0/1
	KR7	Input	0	–	–	1	×	–	0/1
	($\overline{\text{SSI10}}$)	Input	1	–	–	1	×	–	0/1
<R> P80	ANI2	Input	×	–	–	1	×	–	–
	ANO0	Output	×	–	–	1	×	–	–
<R> P81	ANI3	Input	×	–	–	1	×	–	–
	IVCMP00	Input	×	–	–	1	×	–	–

Remarks 1. ×: Don't care
PIORxx: Peripheral I/O redirection register
POMxx: Port output mode register
PMCxx: Port mode control register
PMxx: Port mode register
Pxx: Port output latch
<R> PIMxx: Port input mode register
<R> PITHLxx: Port input threshold control register

Remarks 2. The relationship between pins and their alternate functions shown in this table indicates the relationship when a 100-pin product is used. In other products, alternate functions might be assigned to different pins, but even in this case, the PIORxx, POMxx, PMCxx, PMxx, and Pxx set in the same way.

3. Functions in parentheses in the above table can be assigned via settings in the peripheral I/O redirection register (PIOR).

<R>

Table 4-29. Settings of Port Mode Register and Output Latch When Using Alternate Function (7/8)

Pin Name	Alternate Function		PIORXX	POMXX	PMCXX	PMXX	PXX	PIMXX	PITHLXX
	Function Name	I/O							
<R> P82	ANI4	Input	×	–	–	1	×	–	–
	IVCMP01	Input	×	–	–	1	×	–	–
<R> P83	ANI5	Input	×	–	–	1	×	–	–
	IVCMP02	Input	×	–	–	1	×	–	–
<R> P84	ANI6	Input	×	–	–	1	×	–	–
	IVCMP03	Input	×	–	–	1	×	–	–
<R> P85	ANI7	Input	×	–	–	1	×	–	–
	IVREF0	Input	×	–	–	1	×	–	–
<R> P86-P87	ANI8 to ANI9	Input	×	–	–	1	×	–	–
P90-P95	ANI10 to ANI15	Input	×	–	–	1	×	–	–
P96-P97	ANI16 to ANI17	Input	×	–	–	1	×	–	–
	ANI26 to ANI27 Note	Input	×	–	1	1	×	–	–
P100-P105	ANI18 to ANI23	Input	×	–	–	1	×	–	–
P106	(LTXD1)	Output	1	–	–	0	1	–	–
P107	(LRXD1)	Input	1	–	–	1	×	–	0/1
P120	ANI25	Input	×	×	1	1	×	–	–
	TI07	Input	0	×	0	1	×	–	–
	INTP4	Input	×	×	0	1	×	–	–
	TRDIOD0	Input	0	×	0	1	×	–	–
		Output	0	0	0	0	0	–	–
	SO01	Output	0	0/1	0	0	1	–	–
	TO07	Output	0	0	0	0	0	–	–
P125	ANI24	Input	×	–	1	1	×	×	×
	TI03	Input	0	–	0	1	×	0	0/1
	INTP1	Input	×	–	0	1	×	0	0/1
	TO03	Output	0	–	0	0	0	×	×
	TRDIOB0	Input	0	–	0	1	×	0	0/1
		Output	0	–	0	0	0	×	×
	$\overline{\text{SSI01}}$	Input	0	–	0	1	×	0/1	0/1
	SNZOUT1	Output	0	–	0	0	0	×	×
P126	(TI01)	Input	1	–	–	1	×	–	–
	(TO01)	Output	1	–	–	0	0	–	–
P127	(TI03)	Input	1	–	–	1	×	–	–
	(TO03)	Output	1	–	–	0	0	–	–
P130	RESOUT	Output	×	–	–	–	0	–	–
P137	INTP0	Input	×	–	–	–	×	–	–

Note In the products of Groups B to D.

Remarks 1. ×: Don't care
PIORxx: Peripheral I/O redirection register
POMxx: Port output mode register
PMCxx: Port mode control register
PMxx: Port mode register
Pxx: Port output latch
<R> PIMxx: Port input mode register
<R> PITHLxx: Port input threshold control register

2. The relationship between pins and their alternate functions shown in this table indicates the relationship when a 100-pin product is used. In other products, alternate functions might be assigned to different pins, but even in this case, the PIORxx, POMxx, PMCxx, PMxx, and Pxx set in the same way.

3. Functions in parentheses in the above table can be assigned via settings in the peripheral I/O redirection register (PIOR).
<R>

Table 4-29. Settings of Port Mode Register and Output Latch When Using Alternate Function (8/8)

Pin Name	Alternate Function		PIORXX	POMXX	PMCXX	PMXX	PXX	PIMXX	PITHLXX
	Function Name	I/O							
P140	PCLBUZ0	Output	×	–	–	0	0	–	–
P150	($\overline{SSI11}$)	Input	1	–	–	1	×	–	0/1
P151	(SO11)	Output	1	–	–	0	1	–	×
P152	(SI11)	Input	1	–	–	1	×	–	0/1
P153	($\overline{SCK11}$)	Input	1	–	–	1	×	–	0/1
		Output	1	–	–	0	1	–	×
P154	(SNZOUT7)	Output	1	–	–	0	0	–	×
P155	(SNZOUT6)	Output	1	–	–	0	0	–	×
P156	(SNZOUT5)	Output	1	–	–	0	0	–	×
P157	(SNZOUT4)	Output	1	–	–	0	0	–	×

Remarks 1. ×: Don't care
PIORxx: Peripheral I/O redirection register
POMxx: Port output mode register
PMCxx: Port mode control register
PMxx: Port mode register
Pxx: Port output latch
<R> PIMxx: Port input mode register
<R> PITHLxx: Port input threshold control register

2. The relationship between pins and their alternate functions shown in this table indicates the relationship when a 100-pin product is used. In other products, alternate functions might be assigned to different pins, but even in this case, the PIORxx, POMxx, PMCxx, PMxx, and Pxx set in the same way.

3. Functions in parentheses in the above table can be assigned via settings in the peripheral I/O redirection register (PIOR).
<R>

4.6 Cautions When Using Port Function

4.6.1 Cautions on 1-bit manipulation instruction for port register n (Pn)

When a 1-bit manipulation instruction is executed on a port that provides both input and output functions, the output latch value of an input port that is not subject to manipulation may be written in addition to the targeted bit.

Therefore, it is recommended to rewrite the output latch when switching a port from input mode to output mode.

<Example> When P10 is an output port, P11 to P17 are input ports (all pin statuses are high level), and the port latch value of port 1 is 00H, if the output of output port P10 is changed from low level to high level via a 1-bit manipulation instruction, the output latch value of port 1 is FFH.

Explanation: The targets of writing to and reading from the Pn register of a port whose PMnm bit is 1 are the output latch and pin status, respectively.

A 1-bit manipulation instruction is executed in the following order in the RL78/F13 and RL78/F14.

<1> The Pn register is read in 8-bit units.
<2> The targeted one bit is manipulated.
<3> The Pn register is written in 8-bit units.

In step <1>, the output latch value (0) of P10, which is an output port, is read, while the pin statuses of P11 to P17, which are input ports, are read. If the pin statuses of P11 to P17 are high level at this time, the read value is FEH.

The value is changed to FFH by the manipulation in <2>.

FFH is written to the output latch by the manipulation in <3>.

Figure 4-97. Bit Manipulation Instruction (P10)

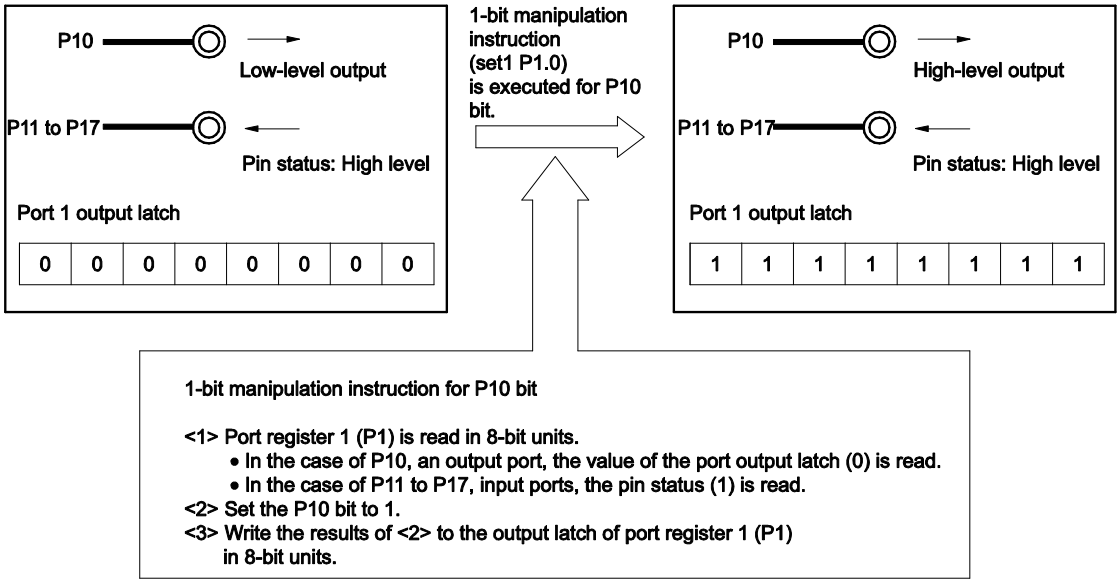

4.6.2 Notes on specifying the pin settings

For an output pin to which multiple functions are assigned, the output of the unused alternate functions must be set to its initial state so as to prevent conflicting outputs. This also applies to the functions assigned by using the peripheral I/O redirection register (PIOR). For details about the alternate function output, see **4.5 Settings of Port Mode Register and Output Latch When Using Alternate Function**.

No specific setting is required for input pins because the output of their alternate functions is disabled (the buffer output is Hi-Z).

Disabling the unused functions, including blocks that are only used for input or do not have I/O, is recommended for lower power consumption.

<R> **Cautions 1.** The input buffer is enabled even if the pin is operating as an output when the N-ch open drain output mode is selected by the corresponding bit in the port output mode register (POMxx).
This may cause a through-current flowing through when the voltage level on this pin is intermediate.

2. When the pin is set to TTL input buffer by the corresponding bit in the port input mode register (PIMxx) and is driven with high level, a through current may flow through the pin due to the configuration of the TTL input buffer. When transitioning to standby mode, It is recommended to set the pins to low to reduce current consumption.

CHAPTER 5 CLOCK GENERATOR

Use the clock generator within a range that satisfies the values stipulated in **CHAPTER 34** to **CHAPTER 36 ELECTRICAL SPECIFICATIONS**.

The presence or absence of connecting resonator pin for subsystem clock and external clock input pin for subsystem clock depends on the product.

	20-, 30-, and 32-pin products	48-, 64-, 80-, and 100-pin products
X1, X2 pins	√	√
EXCLK pin	√	√
XT1, XT2 pins	–	√
EXCLKS pin	–	√

Cautions 1. The 20-, 30-, and 32-pin products don't have the subsystem clock.

2. Do not use the XT1 and XT2 pin functions in grade-Y products.

5.1 Functions of Clock Generator

The clock generator generates the clock to be supplied to the CPU and peripheral hardware.

The following three kinds of system clocks and clock oscillators are selectable.

(1) Main system clock

<1> X1 oscillator

This circuit oscillates a clock of f_X = 1 to 20 MHz by connecting a resonator to X1 and X2.

Oscillation can be stopped by executing the STOP instruction or setting of the MSTOP bit (bit 7 of the clock operation status control register (CSC)).

<2> High-speed on-chip oscillator (High-speed OCO)

The frequency at which to oscillate can be selected from among f_{IH} = 64, 48, 32, 24, 16, 12, 8, 4, or 1 MHz (TYP.) by using the user option byte (000C2H/020C2H). When 64 MHz or 48 MHz is selected as f_{IH}, f_{CLK} is set to 32 MHz or 24 MHz, respectively, after a reset release. The CPU always starts operating with this high-speed on-chip oscillator clock **Note**. Oscillation can be stopped by executing the STOP instruction or setting of the HIOSTOP bit (bit 0 of the CSC register).

The frequency set by using the user option byte can be changed by the high-speed on-chip oscillator frequency select register (HOCODIV). For the frequency, see **Figure 5-15 Format of High-speed on-chip oscillator frequency select register (HOCODIV)**.

An external main system clock (f_{EX} = 1 to 20 MHz) can also be supplied from the EXCLK/X2/P122 pin. An external main system clock input can be disabled by executing the STOP instruction or setting of the MSTOP bit.

As the high-speed system clock, an X1 clock or external main system clock can be selected by setting of the OSCSEL bit (bit 6 of the clock operation mode control register (CMC)) and the EXCLK bit (bit 7 of the clock operation mode control register (CMC)).

As the main system clock, a high-speed system clock (X1 clock or external main system clock) or high-speed on-chip oscillator clock can be selected by setting of the MCM0 bit (bit 4 of the system clock control register (CKC)).

Note When selecting 64 MHz or 48 MHz, the selected clock (f_{IH}) is supplied to timer RD.

When supplying 64 MHz or 48 MHz to timer RD, set f_{CLK} to f_{IH}.

(2) PLL clock

This clock oscillates the clock whose f_{PLL} is 24 MHz, 32 MHz, or 64 MHz by oscillating the main system clock at 4 MHz or 8 MHz and multiplying by 3, 4, 6, or 8 times. When setting f_{PLL} to 64 MHz or 48 MHz, the division of f_{CLK} should be set to 32 MHz or 24 MHz by the MDIV2 to MDIV0 bits in the f_{MP} clock division register (MDIV). Oscillation can be stopped by setting the PLLON bit (bit 0 of the PLLCTL register). Before entering STOP mode, the PLLON bit should be cleared to 0 (Stops PLL operation).

Remarks 1. The PLL input clock frequency can be set to 4 MHz or 8 MHz. When setting the high-speed on-chip oscillator clock as the PLL input clock, the on-chip oscillator clock can be set to 4 MHz or 8 MHz depending on the setting of bits 4 to 0 (FRQSEL4 to FRQSEL0) of the user option byte (000C2H/020C2H). For details of the user option byte, see **CHAPTER 29 OPTION BYTE**.

2. Set the multiplier of the PLL clock by bits 1 (PLLMUL) and 4 (PLLDIV0) in the PLL control register (PLLCTL).

(3) Subsystem clock

- **XT1 clock oscillator**

  This circuit oscillates a clock of f_{XT} = 32.768 kHz by connecting a 32.768 kHz resonator to XT1 and XT2. Oscillation can be stopped by setting the XTSTOP bit (bit 6 of the clock operation status control register (CSC)).

An external subsystem clock (f_{EXS} = 32.768 kHz) can also be supplied from the EXCLKS/XT2/P124 pin. An external subsystem clock input can be disabled by setting the XTSTOP bit (bit 6 of the clock operation status control register (CSC)).

As the subsystem clock, an XT1 clock or external subsystem clock can be selected by setting of the OSCSELS bit (bit 4 of the clock operation mode control register (CMC)), the EXCLKS bit (bit 5 of the clock operation mode control register (CMC)), and the SELLOSC bit (bit 0 of the clock select register (CKSEL)).

(4) Low-speed on-chip oscillator (Low-speed OCO)

This circuit oscillates a clock of f_{IL} = 15 kHz (TYP.).

The low-speed on-chip oscillator clock can be used as the CPU/peripheral hardware clock.

Only the following hardware circuits operate by the low-speed on-chip oscillator clock.

- Clock monitor (f_{IL})
- Timer RJ (f_{IL} and f_{SL})
- Timer RD (f_{SL})
- Clock output/buzzer output control circuit (f_{SL})
- <R> Channel 1 of Timer Array Unit 0 (f_{IL})

<R> This circuit operates when at least bit 4 in the operation speed mode control register (OSMC) or bit 0 in the clock select register (CKSEL) is 1. When stopping the oscillation of the low-speed on-chip oscillator, set the WUTMMCK0 and SELLOSC bits to 0.

As the main/PLL select clock (f_{MP}), a main system clock (f_{MAIN}) or PLL clock (f_{PLL}) can be selected by setting of the SELPLL bit (bit 2 of the PLL control register (PLLCTL)).

As the subsystem/low-speed on-chip oscillator select clock (f_{SL}), a subsystem clock (f_{SUB}) or low-speed on-chip oscillator (f_{IL}) can be selected by setting of the CKSEL bit (bit 0 of the clock select register (CKSEL)).

<R> **Remark** f_X: X1 clock oscillation frequency

f_{IH}: High-speed on-chip oscillator clock frequency (64 MHz max.) **Notes 1, 3**

f_{EX}: External main system clock frequency

f_{MX}: High-speed system clock frequency

f_{MAIN}: Main system clock frequency

f_{XT}: XT1 clock oscillation frequency

f_{EXS}: External subsystem clock frequency

f_{SUB}: Subsystem clock frequency

f_{CLK}: CPU/peripheral hardware clock frequency

f_{IL}: Low-speed on-chip oscillator clock frequency

f_{SL}: Subsystem/low-speed on-chip oscillator select clock frequency

f_{PLL}: PLL clock frequency (64 MHz max.) **Notes 2, 3**

f_{MP}: Main/PLL select clock frequency (64 MHz max.)

Notes 1. f_{IH} is controlled by hardware so that the MDIV register is set to 01H (f_{MP} = two frequency division) when f_{IH} is set to 64 MHz or 48 MHz after a reset release. When supplying 64 MHz or 48 MHz to timer RD, set f_{CLK} to f_{IH}.

2. When setting f_{PLL} to 64 MHz or 48 MHz, the division of f_{MP} should be set within the range of 1 MHz to 32 MHz (or 1 MHz to 24 MHz for grade-K and grade-Y products) by the MDIV2 to MDIV0 bits in the f_{MP} clock division register (MDIV). When supplying 64 MHz or 48 MHz to timer RD, set f_{CLK} to f_{PLL}.

3. When supplying 64 MHz or 48 MHz to timer RD, set the MDIV register to 01H (f_{MP}/2 is selected).

5.2 Configuration of Clock Generator

The clock generator includes the following hardware.

Table 5-1. Configuration of Clock Generator

Item	Configuration
Control registers	Clock operation mode control register (CMC) System clock control register (CKC) Clock operation status control register (CSC) Oscillation stabilization time counter status register (OSTC) Oscillation stabilization time select register (OSTS) Peripheral enable registers 0, 1, 2 (PER0, PER1, PER2) Operation speed mode control register (OSMC) High-speed on-chip oscillator frequency select register (HOCODIV) High-speed on-chip oscillator trimming register (HIOTRM) CAN clock select register (CANCKSEL) LIN clock select register (LINCKSEL) Clock select register (CKSEL) PLL control register (PLLCTL) PLL status register (PLLSTS) f_{MP} clock division register (MDIV)
Oscillators	X1 oscillator XT1 oscillator High-speed on-chip oscillator clock Low-speed on-chip oscillator clock

<R>

Figure 5-1. Block Diagram of Clock Generator

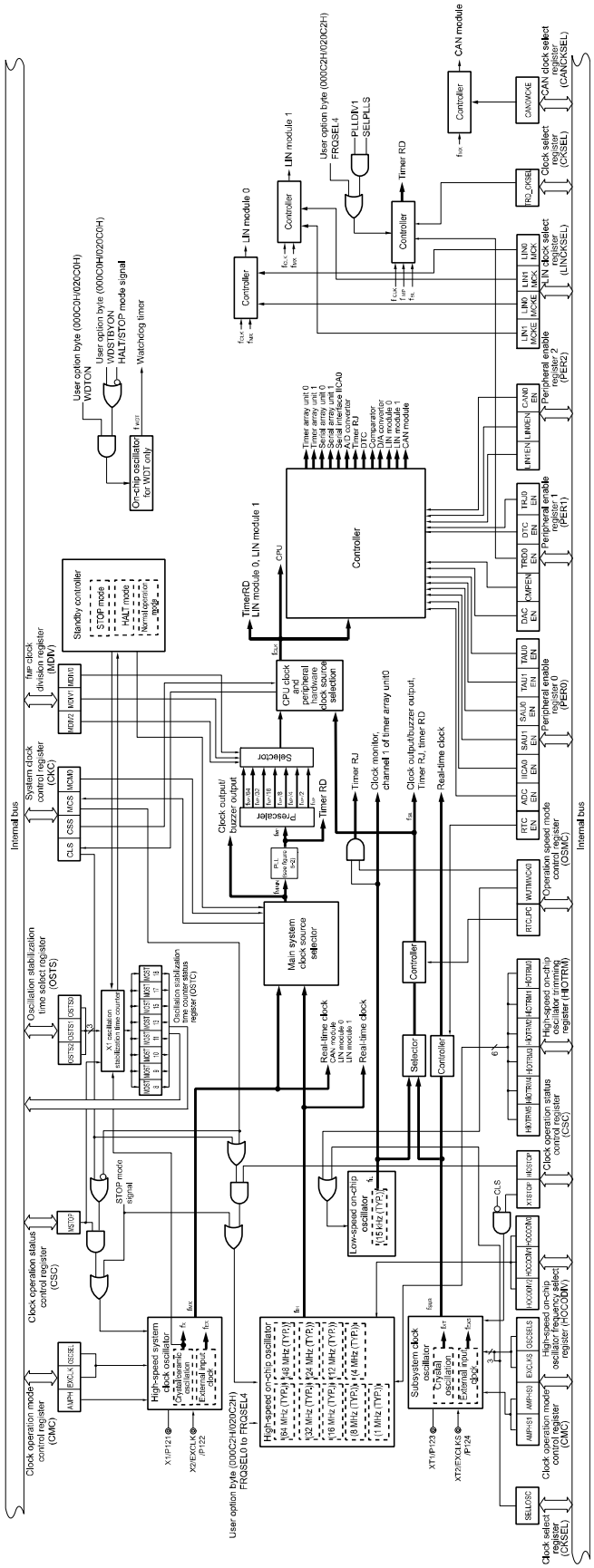

(**Remark** is listed on the next page.)

Remark f_X: X1 clock oscillation frequency
f_{IH}: High-speed on-chip oscillator clock frequency (64 MHz max.) Note
f_{EX}: External main system clock frequency
f_{MX}: High-speed system clock frequency
f_{MAIN}: Main system clock frequency
f_{XT}: XT1 clock oscillation frequency
f_{EXS}: External subsystem clock frequency
f_{SUB}: Subsystem clock frequency
f_{CLK}: CPU/peripheral hardware clock frequency
f_{IL}: Low-speed on-chip oscillator clock frequency
f_{SL}: Subsystem/low-speed on-chip oscillator select clock frequency
f_{MP}: Main system/PLL select clock frequency
f_{PLL}: PLL clock frequency

Note f_{IH} is controlled by hardware so that the MDIV register is set to 01H (f_{MP} = two frequency division) when f_{IH} is set to 64 MHz or 48 MHz. When supplying 64 MHz or 48 MHz to timer RD, set f_{CLK} to f_{IH}.

Figure 5-2. Block Diagram of PLL Circuit

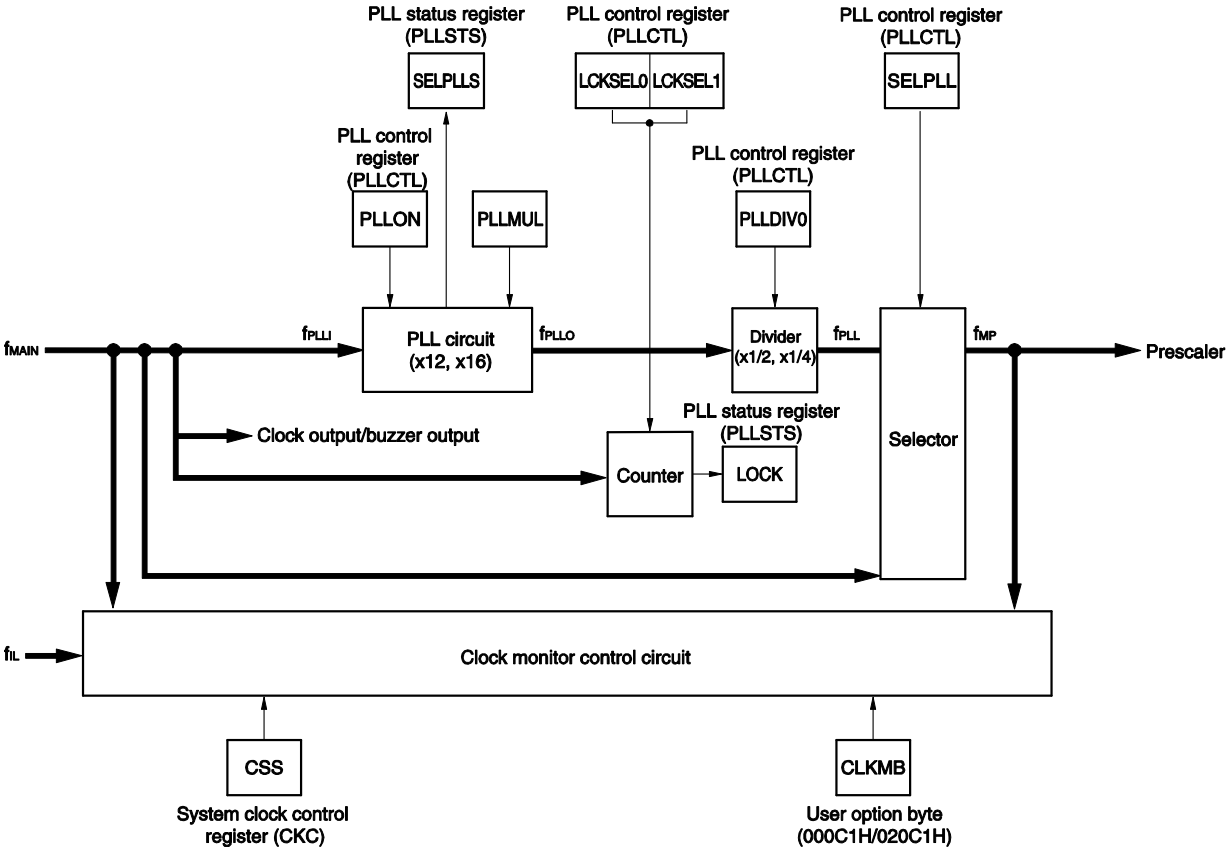

(**Remark** is listed on the next page.)

Remark f_{MAIN}: Main system clock
f_{IL}: Low-speed on-chip oscillator clock
f_{PLLI}: PLL input clock
f_{PLLO}: PLL output clock
f_{MP}: Main system/PLL select clock
f_{PLL}: PLL clock

5.3 Registers Controlling Clock Generator

The following registers are used to control the clock generator.

- Clock operation mode control register (CMC)
- System clock control register (CKC)
- Clock operation status control register (CSC)
- Oscillation stabilization time counter status register (OSTC)
- Oscillation stabilization time select register (OSTS)
- Peripheral enable registers 0, 1, 2 (PER0, PER1, PER2)
- Operation speed mode control register (OSMC)
- High-speed on-chip oscillator frequency select register (HOCODIV)
- High-speed on-chip oscillator trimming register (HIOTRM)
- CAN clock select register (CANCKSEL)
- LIN clock select register (LINCKSEL)
- Clock select register (CKSEL)
- PLL control register (PLLCTL)
- PLL status register (PLLSTS)
- f_{MP} clock division register (MDIV)

5.3.1 Clock Operation Mode Control Register (CMC)

This register is used to set the operation mode of the X1/P121, X2/EXCLK/P122, XT1/P123, and XT2/EXCLKS/P124 pins, and to select a gain of the oscillator.

The CMC register can be written only once by an 8-bit memory manipulation instruction after reset release. This register can be read by an 8-bit memory manipulation instruction.

Writing to the CMC register is disabled when the GCSC bit of the IAWCTL register is set to 1.

Reset signal generation sets this register to 00H.

Figure 5-3. Format of Clock Operation Mode Control Register (CMC)

Address: FFFA0H After reset: 00H R/W

Symbol	7	6	5	4	3	2	1	0
CMC	EXCLK	OSCSEL	EXCLKS	OSCSELS Note 1	0	AMPHS1	AMPHS0	AMPH

EXCLK	OSCSEL	High-speed system clock pin operation mode	X1/P121 pin	X2/EXCLK/P122 pin
0	0	Input port mode	Input port	
0	1	X1 oscillation mode	Crystal/ceramic resonator connection	
1	0	Input port mode	Input port	
1	1	External clock input mode	Input port	External clock input

<R>

CKSEL register	CMC register		Subsystem clock pin operation mode	XT1/P123 pin	XT2/EXCLKS/ P124 pin
SELLOSC Note 1, 2	EXCLKS	OSCSELS Note 1			
x	0	0	Input port mode	Input port	
0	0	1	XT1 oscillation mode	Crystal resonator connection	
1	0	1	Input port mode (low-speed on-chip oscillator operation mode)	Input port	
x	1	0	Input port mode	Input port	
0	1	1	External clock input mode	Input port	External clock input
1	1	1	Input port mode (low-speed on-chip oscillator operation mode)	Input port	

AMPHS1	AMPHS0	XT1 oscillator oscillation mode selection Note 3	
0	0	Low power consumption oscillation (default)	Oscillation margin: Medium
0	1	Normal oscillation	Oscillation margin: high
1	0	Ultra-low power consumption oscillation	Oscillation margin: Low
1	1	Setting prohibited	

AMPH	Control of X1 clock oscillation frequency
0	1 MHz ≤ f_X ≤ 10 MHz
1	1 MHz ≤ f_X ≤ 20 MHz

Notes 1. The 20-, 30-, and 32-pin products do not have a subsystem clock (f_{SUB}). If the low-speed on-chip oscillator is selected as the source of the clock signal for the CPU/peripheral hardware clock (f_{CLK}) or for a peripheral function, set the SELLOSC bit to 1.

2. When the SELLOSC bit is set to 1, the subsystem clock (f_{SUB}) cannot be supplied to the input clock (f_{RTC}) of the real-time clock.

3. As the XT oscillator becomes oscillation mode with lower power consumption, then its oscillation margin becomes smaller.

Cautions 1. The CMC register can be written only once after reset release, by an 8-bit memory manipulation instruction. When the CMC register is used at the default value (00H), be sure to set 00H to this register after reset release in order to prevent malfunctioning during a program loop.

2. After reset release, set the CMC register before X1 or XT1 oscillation is started as set by the clock operation status control register (CSC).

3. **Be sure to set the AMPH bit to 1 if the X1 clock oscillation frequency exceeds 10 MHz.**
   When the X1 clock oscillation frequency is in the range from 1 to 10 MHz, setting the AMPH bit to 1 improves the oscillation margin.
4. **The XT1 oscillator is a circuit with low amplification in order to achieve low-power consumption. Note the following points when designing the circuit.**

   - **Pins and circuit boards include parasitic capacitance. Therefore, perform oscillation evaluation using a circuit board to be actually used and confirm that there are no problems.**
   - **Make the wiring between the XT1 and XT2 pins and the resonators as short as possible, and minimize the parasitic capacitance and wiring resistance. Note this particularly when the ultra-low power consumption oscillation (AMPHS1, AMPHS0 = 1, 0) is selected.**
   - **Configure the circuit of the circuit board, using material with little parasitic capacitance and wiring resistance.**
   - **Place a ground pattern that has the same potential as V_{SS} as much as possible near the XT1 oscillator.**
   - **Be sure that the signal lines between the XT1 and XT2 pins, and the resonators do not cross with the other signal lines. Do not route the wiring near a signal line through which a high fluctuating current flows.**
   - **The impedance between the XT1 and XT2 pins may drop and oscillation may be disturbed due to moisture absorption of the circuit board in a high-humidity environment or dew condensation on the board. When using the circuit board in such an environment, take measures to damp-proof the circuit board, such as by coating.**
   - **When coating the circuit board, use material that does not cause capacitance or leakage between the XT1 and XT2 pins.**

5.3.2 System Clock Control Register (CKC)

This register is used to select a CPU/peripheral hardware clock and a main system clock.

Set the CKC register by a 1-bit or 8-bit memory manipulation instruction.

Writing to the CKC register is disabled when the GCSC bit of the IAWCTL register is set to 1.

Reset signal generation sets this register to 00H.

Figure 5-4. Format of System Clock Control Register (CKC)

Address: FFFA4H After reset: 00H R/W [Note 1]

Symbol	<7>	<6>	<5>	<4>	3	2	1	0
CKC	CLS	CSS	MCS	MCM0	0	0	0	0

CLS	Status of CPU/peripheral hardware clock (f_{CLK})
0	Main system/PLL select clock (f_{MP})
1	Subsystem/low-speed on-chip oscillator select clock (f_{SL})

CSS Notes 2, 3	Selection of CPU/peripheral hardware clock (f_{CLK})
0	Main system/PLL select clock (f_{MP})
1	Subsystem/low-speed on-chip oscillator select clock (f_{SL})

MCS	Status of main system clock (f_{MAIN})
0	High-speed on-chip oscillator clock (f_{IH})
1	High-speed system clock (f_{MX})

MCM0 Notes 2, 4, 5	Main system clock (f_{MAIN}) operation control
0	Selects the high-speed on-chip oscillator clock (f_{IH}) as the main system clock (f_{MAIN})
1	Selects the high-speed system clock (f_{MX}) as the main system clock (f_{MAIN})

Notes 1. Bits 7 and 5 are read-only.

2. Changing the value of the MCM0 bit is prohibited while the CSS bit is set to 1.

3. When setting the CSS bit in the 20-, 30-, or 32-pin products, set bit 0 (SELLOSC) in the clock select register (CKSEL) to 1 (Selects f_{IL}).

4. Changing the value of the MCM0 bit is prohibited while the PLLON bit is set to 1.

5. To change the MCM0 bit from 0 to 1 while FRQSEL4 = 1 in the corresponding user option byte (at 000C2H or 020C2H), stop counting by the timer RD (setting the TSTART0 and TSTART1 bits in the TRDSTR register to 0) and disable clock or buzzer output (by setting the PCLOE0 bit in the CKS0 register to 0) before changing the MCM0 bit.

Cautions 1. Be sure to set bits 0 to 3 of the CKC register to 0.

2. The clock set by the CSS bit is supplied to the CPU and peripheral hardware. If the CPU clock is changed, therefore, the clock supplied to peripheral hardware (except the real-time clock, clock output/buzzer output, and watchdog timer) is also changed at the same time. Consequently, stop each peripheral function when changing the CPU/peripheral hardware clock.

3. If the subsystem clock or low-speed on-chip oscillator clock is used as the peripheral hardware clock, the operations of the A/D converter and IICA are not guaranteed. For the operating characteristics of the peripheral hardware, refer to the chapters describing the various peripheral hardware as well as CHAPTER 34 to CHAPTER 36 ELECTRICAL SPECIFICATIONS.

4. When selecting f_{IH} as the count source for timer RD, set f_{CLK} to f_{MP} before setting bit 4 (TRD0EN) in peripheral enable register 1 (PER1). When changing f_{CLK} to a clock other than f_{MP}, clear bit 4 (TRD0EN) in peripheral enable register 1 (PER1) before changing.

Remark For setting of the PLL clock, refer to **5.6.4 Examples of Setting PLL Circuit**.

5.3.3 Clock Operation Status Control Register (CSC)

This register is used to control the operations of the high-speed system clock, high-speed on-chip oscillator clock, and subsystem clock (except the low-speed on-chip oscillator clock).

Set the CSC register by a 1-bit or 8-bit memory manipulation instruction.

Writing to the CSC register is disabled when the GCSC bit of the IAWCTL register is set to 1.

Reset signal generation sets this register to C0H.

Figure 5-5. Format of Clock Operation Status Control Register (CSC)

Address: FFFA1H After reset: C0H R/W

Symbol	<7>	<6>	5	4	3	2	1	<0>
CSC	MSTOP	XTSTOP	0	0	0	0	0	HIOSTOP

MSTOP	High-speed system clock operation control		
	X1 oscillation mode	External clock input mode	Input port mode
0	X1 oscillator operating	External clock from EXCLK pin is valid	Input port
1	X1 oscillator stopped	External clock from EXCLK pin is invalid	

XTSTOP Note	Subsystem clock operation control		
	XT1 oscillation mode	External clock input mode	Input port mode
0	XT1 oscillator operating	External clock from EXCLKS pin is valid	Input port
1	XT1 oscillator stopped	External clock from EXCLKS pin is invalid	

HIOSTOP	High-speed on-chip oscillator clock operation control
0	High-speed on-chip oscillator operating
1	High-speed on-chip oscillator stopped

Note When setting the CSC register in the 20-, 30-, or 32-pin products, use the register with the XTSTOP bit set to 1 without changing from the default.

Cautions 1. After reset release, set the clock operation mode control register (CMC) before setting the CSC register.

2. Set the oscillation stabilization time select register (OSTS) before setting the MSTOP bit to 0 after releasing reset. Note that if the OSTS register is being used with its default settings, the OSTS register is not required to be set here.

3. To start X1 oscillation as set by the MSTOP bit, check the oscillation stabilization time of the X1 clock by using the oscillation stabilization time counter status register (OSTC).

4. When starting XT1 oscillation by setting the XTSTOP bit, wait for oscillation of the subsystem clock to stabilize by setting a wait time using software.

5. Do not stop the clock selected for the CPU peripheral hardware clock (f_{CLK}) with the OSC register.

<R> **6. The setting of the flags of the register to stop clock oscillation (invalidate the external clock input) and the condition before clock oscillation is to be stopped are as Table 5-2. Before stopping the clock oscillation, check the conditions.**

Table 5-2. Condition Before Stopping Clock Oscillation and Flag Setting

Clock	Condition Before Stopping Clock (Invalidating External Clock Input)	Setting of CSC Register Flags
X1 clock External main system clock	CPU and peripheral hardware clocks operate with a clock other than the high-speed system clock or PLL clock (source clock = high-speed system clock). (CLS (bit 7 of the CKC register) = 0 and MCS (bit 5 of the CKC register) = 0, or CLS = 1)	MSTOP = 1
XT1 clock External subsystem clock	CPU and peripheral hardware clocks operate with a clock other than the subsystem clock. (CLS = 0, or CLS = 1 and SELLOSC (bit 0 of the CKSEL register) = 1)	XTSTOP = 1
High-speed on-chip oscillator clock	CPU and peripheral hardware clocks operate with a clock other than the high-speed on-chip oscillator clock or PLL clock (source clock = high-speed on-chip oscillator clock). (CLS = 0 and MCS = 1, or CLS = 1)	HIOSTOP = 1

5.3.4 Oscillation Stabilization Time Counter Status Register (OSTC)

This is the register that indicates the count status of the X1 clock oscillation stabilization time counter.
The X1 clock oscillation stabilization time can be checked in the following case,

- If the X1 clock starts oscillation while the high-speed on-chip oscillator clock or subsystem/low-speed on-chip oscillator select clock is being used as the CPU clock.
- If the STOP mode is entered and then released while the high-speed on-chip oscillator clock is being used as the CPU clock with the X1 clock oscillating.

The OSTC register can be read by a 1-bit or 8-bit memory manipulation instruction.
The generation of reset signal, the STOP instruction and MSTOP (bit 7 of clock operation status control register (CSC)) = 1 clear the OSTC register to 00H.

Remark The oscillation stabilization time counter starts counting in the following cases.
- When oscillation of the X1 clock starts (when EXCLK of the CMC register = 0 and OSCSEL of the CMC register = 1, MSTOP of the CSC register = 0)
- When the STOP mode is released

Figure 5-6. Format of Oscillation Stabilization Time Counter Status Register (OSTC)

Address: FFFA2H After reset: 00H R

Symbol	7	6	5	4	3	2	1	0
OSTC	MOST 8	MOST 9	MOST 10	MOST 11	MOST 13	MOST 15	MOST 17	MOST 18

MOST 8	MOST 9	MOST 10	MOST 11	MOST 13	MOST 15	MOST 17	MOST 18	Oscillation stabilization time status		
									f_X = 10 MHz	f_X = 20 MHz
0	0	0	0	0	0	0	0	$2^8/f_X$ max.	25.6 μs max.	12.8 μs max.
1	0	0	0	0	0	0	0	$2^8/f_X$ min.	25.6 μs min.	12.8 μs min.
1	1	0	0	0	0	0	0	$2^9/f_X$ min.	51.2 μs min.	25.6 μs min.
1	1	1	0	0	0	0	0	$2^{10}/f_X$ min.	102.4 μs min.	51.2 μs min.
1	1	1	1	0	0	0	0	$2^{11}/f_X$ min.	204.8 μs min.	102.4 μs min.
1	1	1	1	1	0	0	0	$2^{13}/f_X$ min.	819.2 μs min.	409.6 μs min.
1	1	1	1	1	1	0	0	$2^{15}/f_X$ min.	3.27 ms min.	1.63 ms min.
1	1	1	1	1	1	1	0	$2^{17}/f_X$ min.	13.10 ms min.	6.55 ms min.
1	1	1	1	1	1	1	1	$2^{18}/f_X$ min.	26.21 ms min.	13.10 ms min.

Cautions 1. After the above time has elapsed, the bits are set to 1 in order from the MOST8 bit and remain 1.

2. The oscillation stabilization time counter counts up to the oscillation stabilization time set by the oscillation stabilization time select register (OSTS). In the following cases, set the oscillation stabilization time of the OSTS register to the value equal to or greater than the count value which is to be checked by the OSTC register.

- **If the X1 clock starts oscillation while the high-speed on-chip oscillator clock or subsystem clock is being used as the CPU clock.**
- **If the STOP mode is entered and then released while the high-speed on-chip oscillator clock is being used as the CPU clock with the X1 clock oscillating. (Note, therefore, that only the status up to the oscillation stabilization time set by the OSTS register is set to the OSTC register after the STOP mode is released.)**

3. The X1 clock oscillation stabilization wait time does not include the time until clock oscillation starts ("a" below).

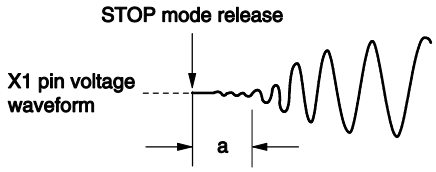

5.3.5 Oscillation Stabilization Time Select Register (OSTS)

This register is used to select the X1 clock oscillation stabilization wait time.

When the X1 clock is oscillated, the operation automatically waits for the time set using the OSTS register.

When oscillation of the X1 clock starts, confirm with the oscillation stabilization time counter status register (OSTC) that the desired oscillation stabilization time has elapsed. The oscillation stabilization time can be checked up to the time set using the OSTC register.

Set the OSTS register by an 8-bit memory manipulation instruction.

Writing to the OSTS register is disabled when the GCSC bit of the IAWCTL register is set to 1.

Reset signal generation sets the OSTS register to 07H.

Figure 5-7. Format of Oscillation Stabilization Time Select Register (OSTS)

Address: FFFA3H After reset: 07H R/W

Symbol	7	6	5	4	3	2	1	0
OSTS	0	0	0	0	0	OSTS2	OSTS1	OSTS0

OSTS2	OSTS1	OSTS0	Oscillation stabilization time selection		
				f_X = 10 MHz	f_X = 20 MHz
0	0	0	$2^8/f_X$	25.6 μs	12.8 μs
0	0	1	$2^9/f_X$	51.2 μs	25.6 μs
0	1	0	$2^{10}/f_X$	102.4 μs	51.2 μs
0	1	1	$2^{11}/f_X$	204.8 μs	102.4 μs
1	0	0	$2^{13}/f_X$	819.2 μs	409.6 μs
1	0	1	$2^{15}/f_X$	3.27 ms	1.63 ms
1	1	0	$2^{17}/f_X$	13.10 ms	6.55 ms
1	1	1	$2^{18}/f_X$	26.21 ms	13.10 ms

Cautions 1. To set the STOP mode when the X1 clock is used as the CPU clock, set the OSTS register before executing the STOP instruction.

2. Change the setting of the OSTS register before setting the MSTOP bit of the clock operation status control register (CSC) to 0.

3. Do not change the value of the OSTS register during the X1 clock oscillation stabilization time.

4. The oscillation stabilization time counter counts up to the oscillation stabilization time set by the OSTS register.

In the following cases, set the oscillation stabilization time of the OSTS register to the value equal to or greater than the count value which is to be checked by the OSTC register after the oscillation starts.

- **If the X1 clock starts oscillation while the high-speed on-chip oscillator clock or subsystem clock is being used as the CPU clock.**
- **If the STOP mode is entered and then released while the high-speed on-chip oscillator clock is being used as the CPU clock with the X1 clock oscillating. (Note, therefore, that only the status up to the oscillation stabilization time set by the OSTS register is set to the OSTC register after the STOP mode is released.)**

5. The X1 clock oscillation stabilization wait time does not include the time until clock oscillation starts ("a" below).

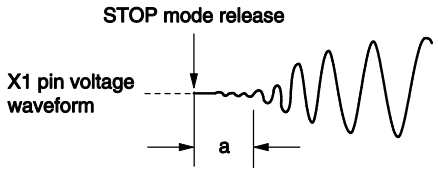

5.3.6 Peripheral Enable Registers 0, 1, 2 (PER0, PER1, PER2)

These registers are used to enable or disable supplying the clock to the peripheral hardware. Clock supply to the hardware that is not used is also stopped so as to decrease the power consumption and noise.

To use the peripheral functions below, which are controlled by these registers, set (1) the bit corresponding to each function before specifying the initial settings of the peripheral functions.

- Real-time clock
- A/D converter
- Serial interface IICA0
- Serial array unit 1
- Serial array unit 0
- Timer array unit 1
- Timer array unit 0
- D/A converter
- Comparator
- Timer RD
- DTC
- Timer RJ
- LIN0
- LIN1
- CAN

The PER0, PER1, and PER2 registers can be set by a 1-bit or 8-bit memory manipulation instruction.

Writing to the PER0, PER1, and PER2 registers is disabled when the GCSC bit of the IAWCTL register is set to 1.

Reset signal generation clears these registers to 00H.

Figure 5-8. Format of Peripheral Enable Register 0 (PER0) (1/3)

Address: F00F0H After reset: 00H R/W

<R>

Symbol	<7>	6	<5>	<4>	<3>	<2>	<1>	<0>
PER0	RTCEN Note 1	0	ADCEN	IICA0EN	SAU1EN	SAU0EN	TAU1EN	TAU0EN

RTCEN Note 1	Control of supplying input clock Note 2 for real-time clock (RTC)
0	Stops input clock supply. • SFR used by the real-time clock (RTC) cannot be written. • The real-time clock (RTC) is in the reset status.
1	Enables input clock supply. • SFR used by the real-time clock (RTC) can be read and written.

Notes 1. The RTCCL register should be set before setting the RTCEN bit to 1.

2. The input clock that can be controlled by the RTCEN bit is used when the register that is used by the real-time clock (RTC) is accessed from the CPU. The RTCEN bit cannot control supply of the operating clock to the RTC.

Caution Be sure to clear the following bits to 0.

Bits 1, 3, 4, and 6 in the 20-, 30-, 32-, 48-, and 64-pin products of the RL78/F13 (LIN incorporated) whose code flash memory is in the range from 16 Kbytes and 64 Kbytes

Bits 4 and 6 in the 30-pin products of the RL78/F13 (CAN and LIN incorporated) and 30-pin products of the RL78/F14

Bit 6 in the products other than above

Figure 5-9. Format of Peripheral Enable Register 0 (PER0) (2/3)

Address: F00F0H After reset: 00H R/W

<R>

Symbol	<7>	6	<5>	<4>	<3>	<2>	<1>	<0>
PER0	RTCEN	0	ADCEN	IICA0EN Notes 1, 2	SAU1EN Note 1	SAU0EN	TAU1EN	TAU0EN

ADCEN	Control of A/D converter input clock supply
0	Stops input clock supply. • SFR used by the A/D converter cannot be written. • The A/D converter is in the reset status.
1	Enables input clock supply. • SFR used by the A/D converter can be read and written.

IICA0EN Notes 1, 2	Control of serial interface IICA0 input clock supply
0	Stops input clock supply. • SFR used by the serial interface IICA0 cannot be written. • The serial interface IICA0 is in the reset status.
1	Enables input clock supply. • SFR used by the serial interface IICA0 can be read and written.

SAU1EN Note 1	Control of serial array unit 1 input clock supply
0	Stops input clock supply. • SFR used by the serial array unit 1 cannot be written. • The serial array unit 1 is in the reset status.
1	Enables input clock supply. • SFR used by the serial array unit 1 can be read and written.

SAU0EN	Control of serial array unit 0 input clock supply
0	Stops input clock supply. • SFR used by the serial array unit 0 cannot be written. • The serial array unit 0 is in the reset status.
1	Enables input clock supply. • SFR used by the serial array unit 0 can be read and written.

Notes 1. Not available in the 20-, 30-, 32-, 48-, and 64-pin products of the RL78/F13 (LIN incorporated) whose code flash memory is in the range from 16 Kbytes and 64 Kbytes.

2. Not available in the 30-pin products of the RL78/F13 (CAN and LIN incorporated) and the 30-pin products of the RL78/F14.

Figure 5-10. Format of Peripheral Enable Register 0 (PER0) (3/3)

Address: F00F0H After reset: 00H R/W

<R>

Symbol	<7>	6	<5>	<4>	<3>	<2>	<1>	<0>
PER0	RTCEN	0	ADCEN	IICA0EN	SAU1EN	SAU0EN	TAU1EN Note	TAU0EN

TAU1EN Note	Control of timer array unit 1 input clock supply
0	Stops input clock supply. • SFR used by timer array unit 1 cannot be written. • Timer array unit 1 is in the reset status.
1	Enables input clock supply. • SFR used by timer array unit 1 can be read and written.

TAU0EN	Control of timer array unit 0 input clock supply
0	Stops input clock supply. • SFR used by timer array unit 0 cannot be written. • Timer array unit 0 is in the reset status.
1	Enables input clock supply. • SFR used by timer array unit 0 can be read and written.

Note Not available in the 20-, 30-, 32-, 48-, and 64-pin products of the RL78/F13 (LIN incorporated) whose code flash memory is in the range from 16 Kbytes and 64 Kbytes.

Figure 5-11. Format of Peripheral Enable Register 1 (PER1) (1/2)

Address: F02C0H After reset: 00H R/W

<R>

Symbol	<7>	6	<5>	<4>	<3>	2	1	<0>
PER1	DACEN Note 1	0	CMPEN Note 1	TRD0EN Note 2	DTCEN	0	0	TRJ0EN

DACEN Note 1	Control of D/A converter input clock supply
0	Stops input clock supply. • SFR used by the D/A converter cannot be written. • The D/A converter is in the reset status.
1	Enables input clock supply. • SFR used by the D/A converter can be read and written.

CMPEN Note 1	Control of comparator input clock supply
0	Stops input clock supply. • SFR used by comparator cannot be written. • Comparator is in the reset status.
1	Enables input clock supply. • SFR used by comparator can be read and written.

TRD0EN Note 2	Control of timer RD input clock supply
0	Stops input clock supply. • SFR used by timer RD cannot be written. • Timer RD is in the reset status.
1	Enables input clock supply. • SFR used by timer RD can be read and written.

Notes 1. Only in the RL78/F14.

2. When FRQSEL4 = 1 in the user option byte (000C2H/020C2H), set f_{CLK} to f_{IH} before setting bit 4 (TRD0EN) in peripheral enable register 1 (PER1). When changing f_{CLK} to a clock other than f_{IH}, clear bit 4 (TRD0EN) of peripheral enable register 1 (PER1) before changing.

Caution Be sure to clear the following bits to 0.
Bits 1, 2, 5, 6, and 7 in the RL78/F13 products
Bits 1, 2, and 6 in the RL78/F14 products

Figure 5-12. Format of Peripheral Enable Register 1 (PER1) (2/2)

Address: F02C0H After reset: 00H R/W

Symbol	<7>	6	<5>	<4>	<3>	2	1	<0>
PER1	DACEN	0	CMPEN	TRD0EN	DTCEN	0	0	TRJ0EN

DTCEN	Control of DTC input clock supply
0	Stops input clock supply. • DTC cannot run.
1	Enables input clock supply. • DTC can run.

TRJ0EN	Control of timer RJ0 input clock supply
0	Stops input clock supply. • SFR used by timer RJ0 cannot be written. • Timer RJ0 is in the reset status.
1	Enables input clock supply. • SFR used by timer RJ0 can be read and written.

Figure 5-13. Format of Peripheral Enable Register 2 (PER2)

Address: F02C1H After reset: 00H R/W

Symbol	7	6	5	4	<3>	<2>	1	<0>
PER2	0	0	0	0	LIN1EN Note 1	LIN0EN	0	CAN0EN Note 2

LIN1EN Note 1	Control of LIN1 input clock supply
0	Stops input clock supply. • Disables writing to the SFR used by LIN1. • LIN1 is in the reset state.
1	Enables input clock supply. • Enables reading from and writing to the SFR used by LIN1.

LIN0EN	Control of LIN0 input clock supply
0	Stops input clock supply. • Disables writing to the SFR used by LIN0. • LIN0 is in the reset state.
1	Enables input clock supply. • Enables reading from and writing to the SFR used by LIN0.

CAN0EN Note 2	Control of CAN input clock supply/control of CANi wakeup interrupt
0	Stops input clock supply. • Disables writing to the SFR used by CAN. • CAN is in the reset state. Disables CANi wakeup interrupt.
1	Enables input clock supply. • Enables reading from and writing to the SFR used by CAN. Enables CANi wakeup interrupt.

Notes 1. Only in the RL78/F14 products with at least 128 Kbytes of code flash memory and the 100-pin products of the RL78/F14.

2. Only in the RL78/F13 (CAN and LIN incorporated) and RL78/F14 products.

Caution Be sure to clear the following bits to 0.
Bits 0, 1, 3, 4, 5, 6, and 7 in the RL78/F13 (LIN incorporated) products
Bits 1, 3, 4, 5, 6, and 7 in the RL78/F13 (CAN and LIN incorporated) products and the RL78/F14 products with 30, 32, 48, 64, or 80 pins and up to 96 Kbytes of code flash memory
Bits 1, 4, 5, 6, and 7 in the RL78/F14 products with at least 128 Kbytes of code flash memory and the 100-pin products of the RL78/F14

5.3.7 Operation Speed Mode Control Register (OSMC)

This register is used to reduce power consumption by stopping unnecessary clock functions.

If the RTCLPC bit is set to 1, power consumption can be reduced, because clock supply to the peripheral functions is stopped in STOP mode or HALT mode while subsystem/low-speed on-chip oscillator select clock is selected as CPU clock.

Set the OSMC register by an 8-bit memory manipulation instruction.

Writing to the OSMC register is disabled when the GCSC bit of the IAWCTL register is set to 1.

Reset signal generation clears this register to 00H.

Figure 5-14. Format of Operation Speed Mode Control Register (OSMC)

Address: F00F3H After reset: 00H R/W

Symbol	7	6	5	4	3	2	1	0
OSMC	RTCLPC	0	0	WUTMMCK0 Note	0	0	0	0

RTCLPC	Setting in STOP mode or HALT mode while subsystem/low-speed on-chip oscillator select clock is selected as CPU clock
0	Enables supply of subsystem/low-speed on-chip oscillator select clock to peripheral functions (See **Table 23-1** for peripheral functions whose operations are enabled.)
1	Stops supply of subsystem/low-speed on-chip oscillator select clock to peripheral functions

WUTMMCK0 Note	Low-speed on-chip oscillator operation control
0	Low-speed on-chip oscillator stopped
1	Low-speed on-chip oscillator operating

<R> **Note** To stop the low-speed on-chip oscillator, set bit 4 (WUTMMCK0) to 0 and bit 0 (SELLOSC) of the clock select register (CKSEL) to 0.

Caution The STOP mode current or HALT mode current when the subsystem/low-speed on-chip oscillator select clock is used can be reduced by setting the RTCLPC bit to 1. However, no clock can be supplied to the peripheral functions during HALT mode while subsystem/low-speed on-chip oscillator select clock is selected as CPU clock. Set bit 7 (RTCEN) of peripheral enable registers 0 (PER0) to 1 and bits 0 to 6 of the PER0 register to 0 before setting HALT mode while the subsystem/low-speed on-chip oscillator clock is selected as CPU clock.

5.3.8 High-Speed On-Chip Oscillator Frequency Select Register (HOCODIV)

The frequency of the high-speed on-chip oscillator which is set by a user option byte (000C2H/020C2H) can be changed by using high-speed on-chip oscillator frequency select register (HOCODIV). However, the selectable frequency depends on the FRQSEL4 and FRQSEL3 bits of the user option byte (000C2H/020C2H).

Set the HOCODIV register by an 8-bit memory manipulation instruction.

Reset signal generation clears this register to default value (the value set with the FRQSEL2 to FRQSEL0 bits of the user option byte (000C2H/020C2H)).

Figure 5-15. Format of High-speed on-chip oscillator frequency select register (HOCODIV)

Address: F00A8H After reset: value set with the FRQSEL2 to FRQSEL0 bits of the user option byte (000C2H/020C2H) R/W

Symbol	7	6	5	4	3	2	1	0
HOCODIV	0	0	0	0	0	HOCODIV2	HOCODIV1	HOCODIV0

HOCODIV2	HOCODIV1	HOCODIV0	Selection of high-speed on-chip oscillator clock frequency			
			24-MHz base	32-MHz base	48-MHz base	64-MHz base
			FRQSEL4 = 0		FRQSEL4 = 1	
			FRQSEL3 = 0	FRQSEL3 = 1	FRQSEL3 = 0	FRQSEL3 = 1
0	0	0	f_{IH} = 24 MHz	f_{IH} = 32 MHz	f_{IH} = 48 MHz	f_{IH} = 64 MHz
0	0	1	f_{IH} = 12 MHz	f_{IH} = 16 MHz	f_{IH} = 24 MHz	f_{IH} = 32 MHz
0	1	0	f_{IH} = 6 MHz	f_{IH} = 8 MHz	f_{IH} = 12 MHz	f_{IH} = 16 MHz
0	1	1	f_{IH} = 3 MHz	f_{IH} = 4 MHz	f_{IH} = 6 MHz	f_{IH} = 8 MHz
1	0	0	Setting prohibited	f_{IH} = 2 MHz	Setting prohibited	f_{IH} = 4 MHz
1	0	1	Setting prohibited	f_{IH} = 1 MHz	Setting prohibited	f_{IH} = 2 MHz
Other than above			Setting prohibited			

Cautions 1. When setting of high-speed on-chip oscillator clock as system clock, the device operates at the old frequency for the duration of 3 clocks after the frequency value has been changed by using the HOCODIV register.

2. To change the frequency of the high-speed on-chip oscillator when X1 oscillation, external oscillation input, subsystem clock, or low-speed on-chip oscillator clock is set for the system clock, stop the high-speed on-chip oscillator by setting bit 0 (HIOSTOP) of the CSC register to 1 and then change the frequency.

3. To change the frequency of the high-speed on-chip oscillator when X1 oscillation or external oscillation input is set for the clock source of the PLL clock, and PLL clock is set for the system clock, stop the high-speed on-chip oscillator by setting bit 0 (HIOSTOP) of the CSC register to 1 and then change the frequency.

4. Do not change the setting of the HOCODIV register when the high-speed on-chip oscillator clock is used as the clock source of the PLL clock and the PLL clock is used as the system clock.

5.3.9 High-Speed On-Chip Oscillator Trimming Register (HIOTRM)

This register is used to adjust the accuracy of the high-speed on-chip oscillator.

With self-measurement of the high-speed on-chip oscillator frequency via a timer using high-accuracy external clock input, and so on, the accuracy can be adjusted.

Set the HIOTRM register by an 8-bit memory manipulation instruction.

Caution The frequency will vary if the temperature and V_{DD} pin voltage change after accuracy adjustment. When the temperature and V_{DD} voltage change, accuracy adjustment must be executed regularly or before the frequency accuracy is required.

<R> **Remark 1 bit of inclement of the HIOTRM register corresponds to around 0.05 % increase of the high-speed on-chip oscillator frequency.**

Figure 5-16. Format of High-Speed On-Chip Oscillator Trimming Register (HIOTRM)

Address: F00A0H After reset: **Note** R/W

Symbol	7	6	5	4	3	2	1	0
HIOTRM	0	0	HIOTRM5	HIOTRM4	HIOTRM3	HIOTRM2	HIOTRM1	HIOTRM0

HIOTRM5	HIOTRM4	HIOTRM3	HIOTRM2	HIOTRM1	HIOTRM0	High-speed on-chip oscillator
0	0	0	0	0	0	Minimum speed
0	0	0	0	0	1	↑
0	0	0	0	1	0	
0	0	0	0	1	1	
0	0	0	1	0	0	
• • •						
1	1	1	1	1	1	0 ↓
1	1	1	1	1	1	1 Maximum speed

Note The reset value differs for each chip.

5.3.10 CAN Clock Select Register (CANCKSEL)

This register is used to control the X1 clock (fx) supplied to the CAN.

Set the CANCKSEL register by a 1-bit or 8-bit memory manipulation instruction.

Writing to the CANCKSEL register is disabled when the GCSC bit of the IAWCTL register is set to 1.

Figure 5-17. Format of CAN Clock Select Register (CANCKSEL)

Address: F02C2H After reset: 00H R/W

Symbol	7	6	5	4	3	2	1	<0>
CANCKSEL	0	0	0	0	0	0	0	CAN0MCKE Note

CAN0MCKE Note	Control of supplying or stopping CAN X1 clock (fx)
0	Stops CAN X1 clock (fx) supply.
1	Enables CAN X1 clock (fx) supply.

Note Only in the RL78/F13 (CAN and LIN incorporated) and RL78/F14 products.

5.3.11 LIN Clock Select Register (LINCKSEL)

This register is used to control the communication clock source supplied to the LIN.

Set the LINCKSEL register by a 1-bit or 8-bit memory manipulation instruction.

Writing to the LINCKSEL register is disabled when the GCSC bit of the IAWCTL register is set to 1.

Figure 5-18. Format of LIN Clock Select Register (LINCKSEL)

Address: F02C3H After reset: 00H R/W

Symbol	7	6	<5>	<4>	3	2	<1>	<0>
LINCKSEL	0	0	LIN1MCKE Note	LIN0MCKE	0	0	LIN1MCK Note	LIN0MCK

LIN1MCKE Note	Control of supplying or stopping LIN1 communication clock source
0	Stops LIN communication clock source supply.
1	Enables LIN communication clock source supply.

LIN0MCKE	Control of supplying or stopping LIN0 communication clock source
0	Stops LIN communication clock source supply.
1	Enables LIN communication clock source supply.

LIN1MCK Note	Control of selecting LIN1 communication clock source
0	Selects the f_{CLK} clock.
1	Selects the f_{MX} clock.

LIN0MCK	Control of selecting LIN0 communication clock source
0	Selects the f_{CLK} clock.
1	Selects the f_{MX} clock.

Note Only in the RL78/F14 products with 48 pins and at least 128 Kbytes of code flash memory and the 100-pin products of the RL78/F14.

Cautions 1. Select the LINn operating clock with the LINnMCK bit before setting the LINnMCKE (n = 0, 1) bit to 1.

2. When operating LINn in SNOOZE mode, set the LINnMCK bit to 0.

3. In case of LINnMCK is set to 1, do not use the timeout error detection.
In that case, set at least 1.2 times the frequency of the LIN communication clock source to the f_{CLK} clock.

5.3.12 Clock Select Register (CKSEL)

This register is used to select the CPU clock (f_{SUB}/f_{IL}) and the clocks for the timer RJ, the timer RD, and clock output/buzzer output. Together with the CMC register, the SELLOSC bit is used to set the operation mode of the subsystem clock. For details, see **Figure 5-3 Format of Clock Operation Mode Control Register (CMC)**.

Set the CKSEL register by a 1-bit or 8-bit memory manipulation instruction.

Writing to the CKSEL register is disabled when the GCSC bit of the IAWCTL register is set to 1.

Figure 5-19. Format of Clock Select Register (CKSEL)

Address: F02C4H After reset: 00H R/W

Symbol	7	6	5	4	3	<2>	1	<0>
CKSEL	0	0	0	0	0	TRD_ CKSEL	0	SELLOSC Note 5, 6, 7

<R>

TRD_CKSEL	Control of TRD clock selection
0	Selects f_{CLK} or f_{MP} Note 1
1	Selects f_{SL} Note 2

SELLOSC Note 5, 6, 7	Control of subsystem/low-speed on-chip oscillator selection clock (f_{SL}) selection
0	Selects f_{SUB} Note 3 and stopping the low-speed on-chip oscillator
1	Selects f_{IL} Note 4 and running the low-speed on-chip oscillator

<R>

Notes 1. When FRQSEL4 = 1 in the user option byte (000C2H/020C2H) or PLLDIV1 = 1 (f_{PLL} > 32 MHz) in the PLLCTL register, set the TRD_CKSEL bit to 0.
When FRQSEL4 = 1 in the user option byte (000C2H/020C2H) or PLLDIV1 = 1 (f_{PLL} > 32 MHz) in the PLLCTL register, the timer RD clock becomes f_{MP}.

2. When f_{SL} is selected as the timer RD clock, f_{SL} should be selected as the CPU clock (set the CSS bit in the CKC register to 1) before setting the TRD0EN bit in the peripheral enable register 1 (PER1) to 1.

3. When setting f_{SUB} as the CPU/peripheral hardware clock, first set the SELLOSC bit in the CKSEL register to 0 and then set the CSS bit in the CKC register to 1 .

4. When setting f_{IL} as the CPU/peripheral hardware clock, first set the SELLOSC bit in the CKSEL register to 1 and then set the CSS bit in the CKC register to 1.

5. When the SELLOSC bit is set to 1, the low-speed on-chip oscillator operates. To stop the low-speed on-chip oscillator, set the WUTMMCK0 bit in the OSMC register to 0 and the SELLOSC bit to 0.

6. The 20-, 30-, and 32-pin products do not have a subsystem clock (f_{SUB}). If the low-speed on-chip oscillator is selected as the source of the clock signal for the CPU/peripheral hardware clock (f_{CLK}) or for a peripheral function, set the SELLOSC bit to 1.

7. When the SELLOSC bit is set to 1, the subsystem clock (f_{SUB}) cannot be supplied to the input clock (f_{RTC}) of the real-time clock.

5.3.13 PLL Control Register (PLLCTL)

This register is used to control the PLL function. The system clock multiplied by 3, 4, 6, or 8 times or not multiplied at all can be selected as the CPU clock and peripheral hardware clock.

Set the PLLCTL register by a 1-bit or 8-bit memory manipulation instruction.

Writing to the PLLCTL register is disabled when the GCSC bit of the IAWCTL register is set to 1.

Figure 5-20. Format of PLL Control Register (PLLCTL)

Address: F02C5H After reset: 00H R/W

Symbol	<7>	<6>	<5>	<4>	3	<2>	<1>	<0>
PLLCTL	LCKSEL1	LCKSEL0	PLLDIV1	PLLDIV0	0	SELPLL	PLLMUL	PLLON

LCKSEL1	LCKSEL0	Control of setting lock-up wait counter
0	0	Selects 128/f_{MAIN}.
0	1	Selects 256/f_{MAIN}.
1	0	Selects 512/f_{MAIN}.
1	1	Setting prohibited

PLLDIV1	Control of PLL output clock selection
0	When $f_{PLL} \leq 32$ MHz
1	When $f_{PLL} > 32$ MHz

PLLDIV0	Control of PLL division selection
0	Divides the clock frequency by 2.
1	Divides the clock frequency by 4.

SELPLL	Control of clock mode selection
0	Clock through mode (f_{MAIN})
1	PLL-clock-selected mode (f_{PLL})

PLLMUL	Control of PLL multiplication selection
0	Multiplies the clock frequency by 12.
1	Multiplies the clock frequency by 16.

PLLON	Control of PLL operation
0	Stops PLL operation.
1	Starts PLL operation.
After PLL operation starts, the lock-up wait time for frequency stabilization is required.	

Cautions 1. Writing to the SELPLL bit is disabled when the PLL output is not stable (LOCK bit of the PLLSTS register = 0).

2. When the clock monitor detects that the main system/PLL select clock has been stopped, the SELPLL bit is not automatically cleared.

3. When the clock monitor detects that the main system/PLL select clock has been stopped, the SELPLLS bit in the PLLSTS register is automatically cleared.

4. When the clock monitor detects that the main system/PLL select clock has been stopped, even if the SELPLL bit is set to 1 (SELPLL = 1), the clock through mode is entered.
5. The counter for the lock-up wait time should be set to a period of at least 40 μs.
6. When PLL operation starts, a wait time for the PLL to be locked is required.
7. When the PLL circuit is used, the PLL input clock and multiplication value can be set only in the combinations shown in the following. When the PLL circuit is not used (PLLON = 0 or SELPLL = 0), an input clock of any frequency between 1 to 32 MHz can be selected.

PLLCTL Register			Inputtable Frequency (f_{MAIN})	Multiplication	Division	Outputtable Frequency (f_{PLL})
PLLMUL	PLLDIV1	PLLDIV0				
0	0	0	4MHz ± 2%	×12	1/2	24MHz ± 2%
0	0	1	8MHz ± 2%	×12	1/4	24MHz ± 2%
0	1	0	8MHz ± 2%	×12	1/2	48MHz ± 2%
1	0	0	4MHz ± 2%	×16	1/2	32MHz ± 2%
1	0	1	8MHz ± 2%	×16	1/4	32MHz ± 2%
1	1	0	8MHz ± 2%	×16	1/2	64MHz ± 2%
Other than above			Setting prohibited			

8. When PLLON = 0, simultaneously changing the PLLON bit and SELPLL bit through 8-bit access is disabled.
9. When the PLLON bit is cleared (becomes 0), the SELPLL bit is also automatically cleared (clock through mode).
10. Before entering STOP mode, the PLLON bit should be cleared to 0.
11. Do not change the value of the MCM0 bit of the CKC register while the PLLON bit is set to 1.
12. When FRQSEL4 = 1 in the user option byte (000C2H/020C2H), set the PLLDIV1 bit to 0 ($f_{PLL} \leq 32$ MHz).
13. To change the SELPLL bit from 1 to 0 while PLLDIV1 = 1 ($f_{PLL} > 32$ MHz), stop counting by the timer RD (setting the TSTART0 and TSTART1 bits in the TRDSTR register to 0) before changing the SELPLL bit.

<R> 14. Do not change the value of the LCKSEL1, LCKSEL0, PLLDIV1, PLLDIV0, and PLLMUL bit while the PLLON bit is set to 1.

Remark When the PLLON and SELPLL bits are set, the clock selected for f_{PLL} is determined according to the state of the LOCK and SELPLLS bits of the PLLSTS register. f_{PLL} for each state of the PLLON, SELPLL, LOCK, and SELPLL bits is shown in the following.

PLLON	SELPLL	LOCK	SELPLLS	Selected Clock (f_{PLL})
0	0	0	0	Main system clock (f_{MAIN})
1	0	0	0	Main system clock (f_{MAIN})
1	0	1	0	Main system clock (f_{MAIN})
1	1	1	0	Main system clock (f_{MAIN}) State in which after the SELPLL bit is set to 1, the clock has not switched to the multiplied clock.
1	1	1	1	PLL clock (f_{PLL})
Other than above				Setting prohibited

5.3.14 PLL Status Register (PLLSTS)

This register is used to indicate the operation status of the PLL clock.

Read the PLLSTS register by a 1-bit or 8-bit memory manipulation instruction.

Reset signal generation sets this register to 00H.

Figure 5-21. Format of PLL Status Register (PLLSTS)

Address: F02C6H After reset: 00H R

Symbol	<7>	6	5	4	<3>	2	1	0
PLLSTS	LOCK	0	0	0	SELPLLS	0	0	0

LOCK	PLL locked state
0	Unlocked state
1 Note	Locked state
This bit is set to 1 when the lock-up wait counter overflows.	

SELPLLS	CLock mode state
0	Clock through mode (f_{MAIN})
1	PLL-clock-selected mode (f_{PLL})

Note When PLL operation starts, a wait time for the PLL to be locked (LOCK = 1) is required.

5.3.15 f_{MP} Clock Division Register (MDIV)

This register is used to divide the frequency of the f_{MP} clock (1/2, 1/4, 1/8, 1/16, 1/32, or 1/64).

Set the MDIV register by an 8-bit memory manipulation instruction.

Writing to the MDIV register is disabled when the GCSC bit of the IAWCTL register is set to 1.

Figure 5-22. Format of f_{MP} Clock Division Register (MDIV)

Address: F02C7H After reset: 00H/01H Note R/W

Symbol	7	6	5	4	3	2	1	0
MDIV	0	0	0	0	0	MDIV2	MDIV1	MDIV0

<R>

MDIV2	MDIV1	MDIV0	f_{MP} clock division control
0	0	0	Selects f_{MP}.
0	0	1	Selects $f_{MP}/2$.
0	1	0	Selects $f_{MP}/4$.
0	1	1	Selects $f_{MP}/8$.
1	0	0	Selects $f_{MP}/16$.
1	0	1	Selects $f_{MP}/32$.
1	1	0	Selects $f_{MP}/64$.
Other than above			Setting prohibited

Note The value of the FRQSEL4 bit in the user option byte (000C2H/020C2H) becomes the initial value of the MDIV0 bit in the MDIV register.

Cautions 1. When setting the MDIV register, make the frequency after division of f_{MP} be within the range of 1 MHz to 32 MHz (or 1 MHz to 24 MHz for grade-K and grade-Y products).

2. When FRQSEL4 = 1 in the user option byte (000C2H/020C2H), set the MDIV2 to MDIV0 bits to 001 (division by 2). Setting these bits to 001 (division by 2) is unnecessary in the clock through mode by PLL oscillation stop detection.

3. When the PLLDIV1 bit in the PLLCTL register is 1 (f_{PLL} > 32 MHz), set the MDIV2 to MDIV0 bits to 001 (division by 2). Setting these bits to 001 (division by 2) is unnecessary in the clock through mode by PLL oscillation stop detection.

4. When 64 MHz or 48 MHz is selected as f_{IH}, the initial setting of the MDIV register is "division by 2" so that f_{CLK} is set to 32 MHz or 24 MHz, respectively.

5.4 System Clock Oscillator

5.4.1 X1 Oscillator

The X1 oscillator oscillates with a crystal resonator or ceramic resonator (1 to 20 MHz) connected to the X1 and X2 pins.

An external clock can also be input. In this case, input the clock signal to the EXCLK pin.

To use the X1 oscillator, set bits 7 and 6 (EXCLK, OSCSEL) of the clock operation mode control register (CMC) as follows.

- Crystal or ceramic oscillation: EXCLK, OSCSEL = 0, 1
- External clock input: EXCLK, OSCSEL = 1, 1

When the X1 oscillator is not used, set the input port mode (EXCLK, OSCSEL = 0, 0).

<R> When the pins are not even used as input port pins, see **2.3 Recommended Connection of Unused Pins.**

Figure 5-23 shows an example of the external circuit of the X1 oscillator.

Figure 5-23. Example of External Circuit of X1 Oscillator

(a) Crystal or ceramic oscillation **(b) External clock**

Cautions are listed on the next page.

5.4.2 XT1 Oscillator

The XT1 oscillator oscillates with a crystal resonator (standard: 32.768 kHz) connected to the XT1 and XT2 pins.

To use the XT1 oscillator, set bit 4 (OSCSELS) of the clock operation mode control register (CMC) to 1.

An external clock can also be input. In this case, input the clock signal to the EXCLKS pin.

To use the XT1 oscillator, set bits 5 and 4 (EXCLKS, OSCSELS) of the clock operation mode control register (CMC) as follows.

- Crystal oscillation: EXCLKS, OSCSELS = 0, 1
- External clock input: EXCLKS, OSCSELS = 1, 1

When the XT1 oscillator is not used, set the input port mode (EXCLKS, OSCSELS = 0, 0).

<R> When the pins are not even used as input port pins, see **2.3 Recommended Connection of Unused Pins.**

Figure 5-24 shows an example of the external circuit of the XT1 oscillator.

Figure 5-24. Example of External Circuit of XT1 Oscillator

Caution **When using the X1 oscillator and XT1 oscillator, wire as follows in the area enclosed by the broken lines in Figures 5-23 and 5-24 to avoid an adverse effect from wiring capacitance.**

- **Keep the wiring length as short as possible.**
- **Do not cross the wiring with the other signal lines. Do not route the wiring near a signal line through which a high fluctuating current flows.**
- **Always make the ground point of the oscillator capacitor the same potential as V_{SS}. Do not ground the capacitor to a ground pattern through which a high current flows.**
- **Do not fetch signals from the oscillator.**

The XT1 oscillator is a circuit with low amplification in order to achieve low-power consumption. Note the following points when designing the circuit.

- **Pins and circuit boards include parasitic capacitance. Therefore, perform oscillation evaluation using a circuit board to be actually used and confirm that there are no problems.**
- **Make the wiring between the XT1 and XT2 pins and the resonators as short as possible, and minimize the parasitic capacitance and wiring resistance. Note this particularly when the ultra-low power consumption oscillation (AMPHS1, AMPHS0 = 1, 0) is selected.**
- **Configure the circuit of the circuit board, using material with little wiring resistance.**
- **Place a ground pattern that has the same potential as V_{SS} as much as possible near the XT1 oscillator.**
- **Be sure that the signal lines between the XT1 and XT2 pins, and the resonators do not cross with the other signal lines. Do not route the wiring near a signal line through which a high fluctuating current flows.**
- **The impedance between the XT1 and XT2 pins may drop and oscillation may be disturbed due to moisture absorption of the circuit board in a high-humidity environment or dew condensation on the board. When using the circuit board in such an environment, take measures to damp-proof the circuit board, such as by coating.**
- **When coating the circuit board, use material that does not cause capacitance or leakage between the XT1 and XT2 pins.**

Figure 5-25 shows examples of incorrect resonator connection.

Figure 5-25. Examples of Incorrect Resonator Connection (1/2)

(a) Too long wiring

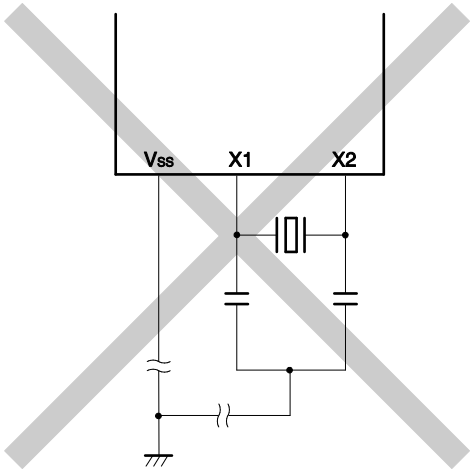

(b) Crossed signal line

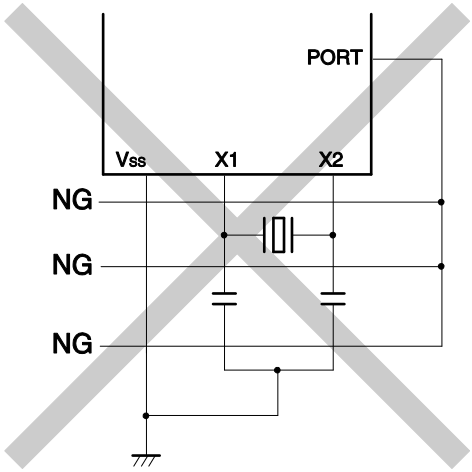

(c) The X1 and X2 signal line wires cross.

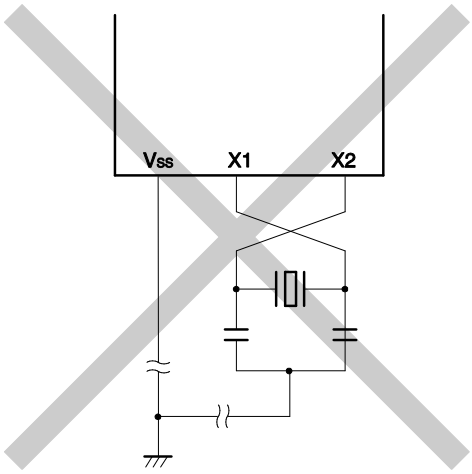

(d) A power supply/GND pattern exists under the X1 and X2 wires.

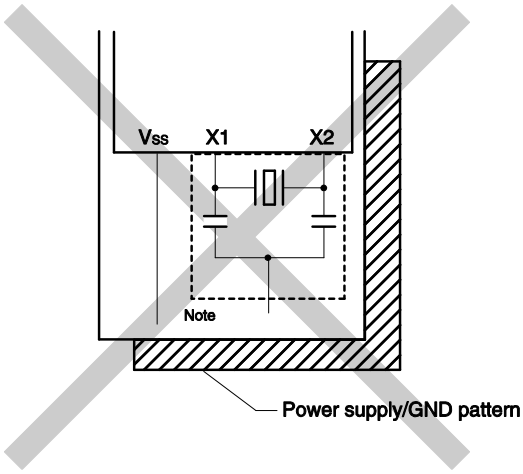

Note Do not place a power supply/GND pattern under the wiring section (section indicated by a broken line in the figure) of the X1 and X2 pins and the resonators in a multi-layer board or double-sided board.
Do not configure a layout that will cause capacitance elements and affect the oscillation characteristics.

Remark When using the subsystem clock, replace X1 and X2 with XT1 and XT2, respectively. Also, insert resistors in series on the XT2 side.

Figure 5-25. Examples of Incorrect Resonator Connection (2/2)

(e) Wiring near high alternating current

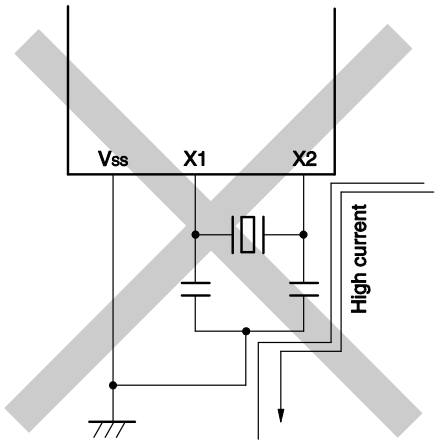

(f) Current flowing through ground line of oscillator (potential at points A, B, and C fluctuates)

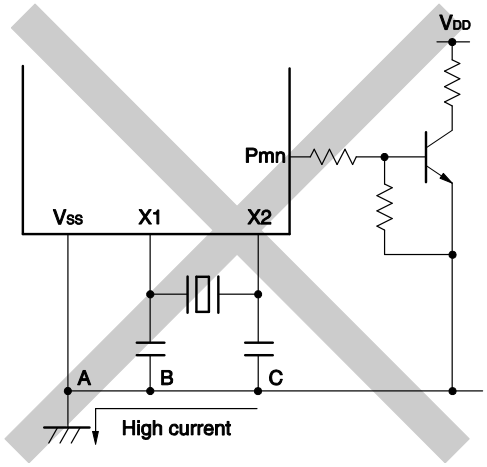

(g) Signals are fetched

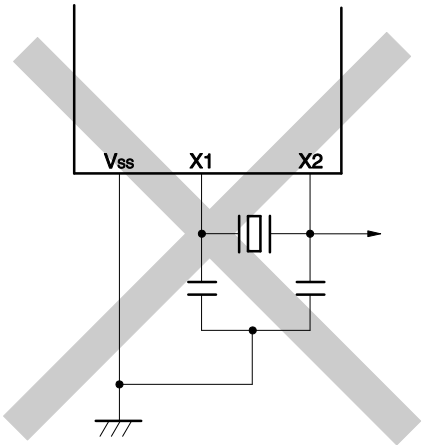

Caution **When X2 and XT1 are wired in parallel, the crosstalk noise of X2 may increase with XT1, resulting in malfunctioning.**

Remark When using the subsystem clock, replace X1 and X2 with XT1 and XT2, respectively. Also, insert resistors in series on the XT2 side.

5.4.3 High-Speed On-Chip Oscillator

The high-speed on-chip oscillator is incorporated in the RL78/F13 and RL78/F14. The frequency can be selected from among 64, 48, 32, 24, 16, 12, 8, 4, or 1 MHz by using the user option byte (000C2H/020C2H). When 64 MHz or 48 MHz is selected, the frequency obtained by dividing the selected clock by 2 by the f_{MP} clock division register (MDIV) is supplied as the CPU clock after a reset release. Oscillation can be controlled by bit 0 (HIOSTOP) of the clock operation status control register (CSC).

The high-speed on-chip oscillator automatically starts oscillating after reset release.

5.4.4 PLL Circuit

The PLL circuit is incorporated in the RL78/F13 and RL78/F14. Operation of the PLL circuit can be controlled by bit 0 (PLLON) of the PLL control register (PLLCTL).

5.4.5 Low-Speed On-Chip Oscillator

The low-speed on-chip oscillator which can be used for the CPU/peripheral hardware clock is incorporated in the RL78/F13 and RL78/F14.

5.4.6 WDT-Dedicated Low-Speed On-Chip Oscillator

The WDT-dedicated low-speed on-chip oscillator is incorporated in the RL78/F13 and RL78/F14.

The WDT-dedicated low-speed on-chip oscillator clock is used as the watchdog timer clock. This clock cannot be used as the CPU clock.

The WDT-dedicated low-speed on-chip oscillator operates when bit 4 (WDTON) of the user option byte (000C0H/020C0H) is set to 1. The WDT-dedicated low-speed on-chip oscillator continues oscillating while the watchdog timer is operating. The WDT-dedicated low-speed on-chip oscillator does not stop while the watchdog timer is operating even though the program goes out of control.

5.5 Clock Generator Operation

The clock generator generates the following clocks and controls the operation modes of the CPU, such as standby mode (see **Figure 5-1**).

- Main system clock f_{MAIN}
  - High-speed system clock f_{MX}
    X1 clock f_X
    External main system clock f_{EX}
  - High-speed on-chip oscillator clock f_{IH}
- Subsystem clock f_{SUB}
  - XT1 clock f_{XT}
  - External subsystem clock f_{EXS}
- PLL clock f_{PLL}
- Low-speed on-chip oscillator clock f_{IL}
- CPU/peripheral hardware clock f_{CLK}

Caution The subsystem clock is only in products with at least 48 pins.

The CPU starts operation when the high-speed on-chip oscillator starts outputting after a reset release in the RL78/F13 and RL78/F14.

When the power supply voltage is turned on, the clock generator operation is shown in Figure 5-26.

Figure 5-26. Clock Generator Operation When Power Supply Voltage Is Turned On

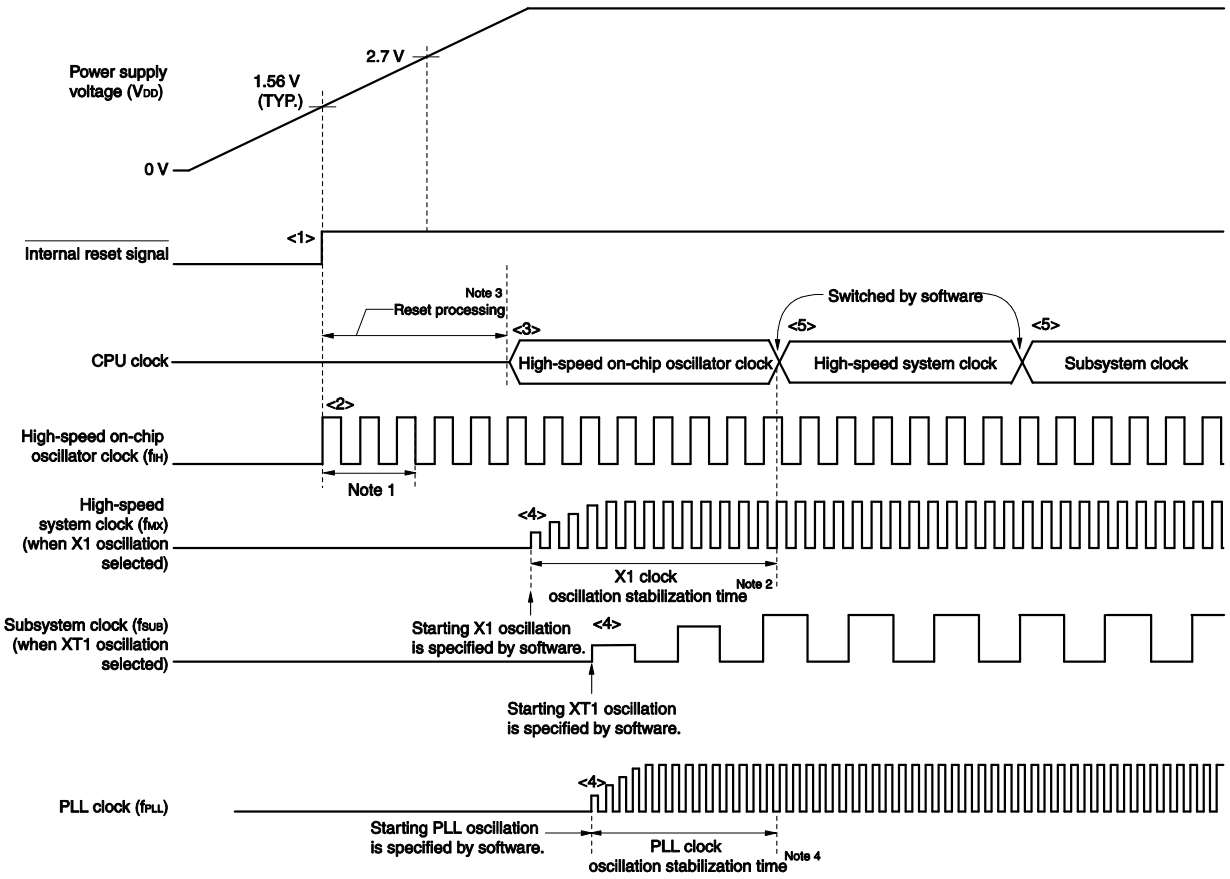

<1> When the power is turned on, an internal reset signal is generated by the power-on-reset (POR) circuit.

<2> When the power supply voltage exceeds 1.56 V (TYP.), the reset is released and the high-speed on-chip oscillator automatically starts oscillation.

<3> The CPU starts operation on the high-speed on-chip oscillator clock after a reset processing such as waiting for the voltage of the power supply or regulator to stabilize has been performed after reset release.

<4> Set the start of oscillation of the X1 clock, XT1 clock, low-speed on-chip oscillator, or PLL clock via software (see **5.6.2 Example of Setting X1 Oscillator**, **5.6.3 Example of Setting XT1 Oscillator**, **5.6.4 Examples of Setting PLL Circuit**, or **5.6.5 Example of Setting Low-Speed On-Chip Oscillator**).

<5> When switching the CPU clock to the X1 or XT1 clock, wait for the clock oscillation to stabilize, and then set switching via software (see **5.6.2 Example of Setting X1 Oscillator** and **5.6.3 Example of Setting XT1 Oscillator**).

Notes 1. The internal reset processing time includes the oscillation accuracy stabilization time of the high-speed on-chip oscillator clock.

2. When releasing a reset, confirm the oscillation stabilization time for the X1 clock using the oscillation stabilization time counter status register (OSTC).

3. For details about the reset processing time, see **CHAPTER 25 POWER-ON-RESET (POR) CIRCUIT**.

4. When the PLL circuit starts operation, time is required so that the PLL circuit becomes locked (LOCK = 1).

Caution It is not necessary to wait for the oscillation stabilization time when an external clock input from the EXCLK pin is used.

5.6 Controlling Clock

5.6.1 Example of Setting High-Speed On-Chip Oscillator

After a reset release, the CPU/peripheral hardware clock (f_{CLK}) always starts operating with the high-speed on-chip oscillator clock. The frequency of the high-speed on-chip oscillator can be selected from 64, 48, 32, 24, 16, 12, 8, 4, and 1 MHz by using FRQSEL0 to FRQSEL4 of the user option byte (000C2H/020C2H). In addition, Oscillation can be changed by the internal high-speed on-chip oscillator frequency select register (HOCODIV).

[User option byte setting]

Address: 000C2H/020C2H After reset: - (user setting value)

	7	6	5	4	3	2	1	0
Option byte	1	1	RESOUTB 0/1	FRQSEL4 0/1	FRQSEL3 0/1	FRQSEL2 0/1	FRQSEL1 0/1	FRQSEL0 0/1

FRQSEL4	FRQSEL3	FRQSEL2	FRQSEL1	FRQSEL0	Frequency of the high-speed on-chip oscillator f_{IH}
1	1	0	0	0	64 MHz
1	0	0	0	0	48 MHz
0	1	0	0	0	32 MHz
0	0	0	0	0	24 MHz
0	1	0	0	1	16 MHz
0	0	0	0	1	12 MHz
0	1	0	1	0	8 MHz
0	1	0	1	1	4 MHz
0	1	1	0	1	1 MHz
Other than above					Setting prohibited

[High-speed on-chip oscillator frequency select register (HOCODIV) setting]

Address: F00A8H

	7	6	5	4	3	2	1	0
HOCODIV	0	0	0	0	0	HOCODIV2	HOCODIV1	HOCODIV0

HOCODIV2	HOCODIV1	HOCODIV0	Selection of high-speed on-chip oscillator clock frequency			
			24-MHz base	32-MHz base	48-MHz base	64-MHz base
			FRQSEL4 = 0		FRQSEL4 = 1	
			FRQSEL3 = 0	FRQSEL3 = 1	FRQSEL3 = 0	FRQSEL3 = 1
0	0	0	f_{IH} = 24 MHz	f_{IH} = 32 MHz	f_{IH} = 48 MHz	f_{IH} = 64 MHz
0	0	1	f_{IH} = 12 MHz	f_{IH} = 16 MHz	f_{IH} = 24 MHz	f_{IH} = 32 MHz
0	1	0	f_{IH} = 6 MHz	f_{IH} = 8 MHz	f_{IH} = 12 MHz	f_{IH} = 16 MHz
0	1	1	f_{IH} = 3 MHz	f_{IH} = 4 MHz	f_{IH} = 6 MHz	f_{IH} = 8 MHz
1	0	0	Setting prohibited	f_{IH} = 2 MHz	Setting prohibited	f_{IH} = 4 MHz
1	0	1	Setting prohibited	f_{IH} = 1 MHz	Setting prohibited	f_{IH} = 2 MHz
Other than above			Setting prohibited			

5.6.2 Example of Setting X1 Oscillator

After a reset release, the CPU/peripheral hardware clock (f_{CLK}) always starts operating with the high-speed on-chip oscillator clock. To subsequently change the clock to the X1 oscillation clock, set the oscillator and start oscillation by using the clock operation mode control register (CMC) and clock operation status control register (CSC) and wait for oscillation to stabilize by using the oscillation stabilization time counter status register (OSTC). After the oscillation stabilizes, set the X1 oscillation clock to f_{CLK} by using the system clock control register (CKC).

[Register settings] Set the registers in the following order.

<1> Set the OSCSEL bit of the CMC register to 1, except for the cases where the frequency is equal or more than 10MHz, in such cases set the AMPH bit to 1, to operate the X1 oscillator.

	7	6	5	4	3	2	1	0
CMC	EXCLK 0	OSCSEL 1	EXCLKS 0	OSCSELS 0	0	AMPHS1 0	AMPHS0 0	AMPH 1

<2> Using the OSTS register, select the oscillation stabilization time of the X1 oscillator at releasing of the STOP mode.
Example: Setting values when a wait of at least 102.4 μs is set based on a 10 MHz resonator.

	7	6	5	4	3	2	1	0
OSTS	0	0	0	0	0	OSTS2 0	OSTS1 1	OSTS0 0

<3> Clear (0) the MSTOP bit of the CSC register to start oscillating the X1 oscillator.

	7	6	5	4	3	2	1	0
CSC	MSTOP 0	XTSTOP 1	0	0	0	0	0	HIOSTOP 0

<4> Use the OSTC register to wait for oscillation of the X1 oscillator to stabilize.
Example: Wait until the bits reach the following values when a wait of at least 102.4 μs is set based on a 10 MHz resonator.

	7	6	5	4	3	2	1	0
OSTC	MOST8 1	MOST9 1	MOST10 1	MOST11 0	MOST13 0	MOST15 0	MOST17 0	MOST18 0

<5> Use the MCM0 bit of the CKC register to specify the X1 oscillation clock as the CPU/peripheral hardware clock.

	7	6	5	4	3	2	1	0
CKC	CLS 0	CSS 0	MCS 0	MCM0 1	0	0	0	0

<6> Use the MCS bit of the CKC register to confirm that f_{MX} (X1 oscillation clock) is selected as the CPU/peripheral hardware clock (MCS = 1).

	7	6	5	4	3	2	1	0
CKC	CLS 0	CSS 0	MCS 1	MCM0 1	0	0	0	0

5.6.3 Example of Setting XT1 Oscillator

After a reset release, the CPU/peripheral hardware clock (f_{CLK}) always starts operating with the high-speed on-chip oscillator clock. To subsequently change the clock to the XT1 oscillation clock, set the oscillator and start oscillation by using the operation speed mode control register (OSMC), clock select register (CKSEL), clock operation mode control register (CMC), and clock operation status control register (CSC), set the XT1 oscillation clock to f_{CLK} by using the system clock control register (CKC).

[Register settings] Set the registers in the following order.

<1> The RTCLPC bit in the OSMC register can be used to enable or disable supply of the clock to the peripheral functions in STOP mode or HALT mode while sub/low-speed on-chip oscillator selection clock is selected as CPU clock.

<R> When RTCLPC = 0, the supply of the subsystem/low-speed on-chip oscillator select clock to peripheral functions is enabled. When RTCLPC = 1, the supply of the subsystem/low-speed on-chip oscillator select clock to peripheral functions is stopped.

	7	6	5	4	3	2	1	0
OSMC	RTCLPC 0/1	 0	 0	WUTMMCK0 0	 0	 0	 0	 0

<2> Select f_{SUB} with the SELLOSC bit of the CKSEL register.

Clear the SELLOSC bit to 0 to set f_{SL} to the XT1 oscillation clock.

	7	6	5	4	3	2	1	0
CKSEL	 0	 0	 0	 0	 0	TRD_CKSEL 0	 0	SELLOSC 0

<3> Select the operation mode of the subsystem clock with the OSCSELS bit of the CMC register.

Set the OSCSELS bit to 1 to select the XT1 oscillation mode or external clock input mode.

	7	6	5	4	3	2	1	0
CMC	EXCLK 0	OSCSEL 0	EXCLKS 0	OSCSELS 1	 0	AMPHS1 0/1	AMPHS0 0/1	AMPH 0

AMPHS0 and AMPHS1 bits: These bits are used to specify the oscillation mode of the XT1 oscillator.

<4> Clear the XTSTOP bit of the CSC register to 0 to start oscillating the XT1 oscillator.

	7	6	5	4	3	2	1	0
CSC	MSTOP 0	XTSTOP 0	 0	 0	 0	 0	 0	HIOSTOP 0

<5> Use the timer function or another function to wait for oscillation of the subsystem clock to stabilize by using software.

<6> Select the CPU/peripheral hardware clock with the CSS bit of the CKC register.

Set the CSS bit to 1 to specify CPU clock = f_{SL} (XT1 oscillation clock).

	7	6	5	4	3	2	1	0
CKC	CLS 0	CSS 1	MCS 0	MCM0 0	 0	 0	 0	 0

<7> Confirm that f_{SL} (XT1 oscillation clock) is selected as the CPU/peripheral hardware clock (CLS = 1) with the CLS bit of the CKC register.

	7	6	5	4	3	2	1	0
CKC	CLS 1	CSS 1	MCS 0	MCM0 0	 0	 0	 0	 0

5.6.4 Examples of Setting PLL Circuit

The following PLL setting procedures are described here.

- Oscillating the PLL clock and setting it as the CPU clock
- Stopping the PLL clock

[Register settings] Set the registers in the following order.

(1) Example of procedure for setting oscillation of PLL clock

<1> Select the frequency of the PLL output clock with the PLLDIV1 bit of the PLLCTL register.

When PLL clock ≤ 32 MHz, clear the PLLDIV1 bit to 0. When PLL clock > 32 MHz, set the PLLDIV1 bit to 1.

	7	6	5	4	3	2	1	0
PLLCTL	LCKSEL1 0/1	LCKSEL0 0/1	PLLDIV1 0/1	PLLDIV0 0/1	0	SELPLL 0	PLLMUL 0/1	PLLON 0

<2> Set the PLL lock-up wait counter with the LCKSEL1 and LCKSEL0 bits of the PLLCTL register.

The counter for the PLL lock-up wait time is set to a period of at least 40 μs. When the PLL source clock (f_{MAIN}) is 4 MHz, set the LCKSEL1 and LCKSEL0 bits to 01 or 10. When the PLL source clock (f_{MAIN}) is 8 MHz, set the LCKSEL1 and LCKSEL0 bits to 10.

<3> Select the frequency division of the PLL clock with the PLLDIV0 bit of the PLLCTL register.

When PLLDIV0 = 0, the PLL division ratio is 2. When PLLDIV0 = 1, the PLL division ratio is 4.

<4> Select the multiplication value of the PLL clock with the PLLMUL bit of the PLLCTL register.

When PLLMUL = 0, the PLL multiplication value is 12. When PLLMUL = 1, the PLL multiplication value is 16.

<5> Wait for the selection of the PLL multiplication value to become effective. After setting the PLLMUL bit, wait for at least 1 μs.

<6> Set the PLLON bit of the PLLCTL register to 1 to start oscillation of the PLL clock.

	7	6	5	4	3	2	1	0
PLLCTL	LCKSEL1 0/1	LCKSEL0 0/1	PLLDIV1 0/1	PLLDIV0 0/1	0	SELPLL 0	PLLMUL 0/1	PLLON 1

<7> Confirm that the PLL circuit is locked (LOCK = 1) with the LOCK bit of the PLLSTS register.

	7	6	5	4	3	2	1	0
PLLSTS	LOCK 1	0	0	0	0	0	0	0

<8> Set the PLL clock between 1 MHz and 32 MHz with the MDIV bits of the MDIV register.

Example: To select $f_{MP}/2$, set the following value.

	7	6	5	4	3	2	1	0
MDIV	0	0	0	0	0	MDIV2 0	MDIV1 0	MDIV0 1

<9> Select the PLL clock mode with the SELPLL bit of the PLLCTL register.

Set the SELPLL bit to 1 to select the PLL-clock-selected mode ($f_{MP} = f_{PLL}$).

	7	6	5	4	3	2	1	0
PLLCTL	LCKSEL1 0/1	LCKSEL0 0/1	PLLDIV1 0/1	PLLDIV0 0/1	0	SELPLL 1	PLLMUL 0/1	PLLON 1

<10> Confirm that the PLL-clock-selected mode is selected (SELPLLS = 1) with the SELPLLS bit of the PLLSTS register.

	7	6	5	4	3	2	1	0
PLLSTS	LOCK 1	0	0	0	SELPLLS 1	0	0	0

(2) Examples of procedure for stopping PLL clock

There is the following method to stop the PLL clock.

- Set the PLLON bit to 0 to stop the PLL clock.

<1> Select the PLL clock mode with the SELPLL bit of the PLLCTL register.

Clear the SELPLL bit to 0 to select the clock through mode (f_{PLL} = f_{MAIN}).

	7	6	5	4	3	2	1	0
PLLCTL	LCKSEL1 0/1	LCKSEL0 0/1	PLLDIV1 0/1	PLLDIV0 0/1	0	SELPLL 0	PLLMUL 0/1	PLLON 1

<2> Confirm that the clock through mode is selected (SELPLLS = 0) with the SELPLLS bit of the PLLSTS register.

	7	6	5	4	3	2	1	0
PLLSTS	LOCK 0/1	0	0	0	SELPLLS 0	0	0	0

<3> Clear the PLLON bit of the PLLCTL register to 0 to stop oscillation of the PLL clock.

	7	6	5	4	3	2	1	0
PLLCTL	LCKSEL1 0/1	LCKSEL0 0/1	PLLDIV1 0/1	PLLDIV0 0/1	0	SELPLL 0	PLLMUL 0/1	PLLON 0

(3) Caution when restarting the PLL clock after being stopped

In a case of restarting the PLL clock after it has been stopped, wait for at least 4 μs after the PLL circuit was stopped before restarting operation.

5.6.5 Example of Setting Low-Speed On-Chip Oscillator

An example of setting the low-speed on-chip oscillator as the CPU clock is shown below.

<1> Select f_{IL} with the SELLOSC bit of the CKSEL register.

Set the SELLOSC bit to 1 to set f_{SL} for the low-speed on-chip oscillator.

	7	6	5	4	3	2	1	0
CKSEL						TRD_CKSEL		SELLOSC
	0	0	0	0	0	0	0	1

<2> Select the operation mode of the subsystem clock with the OSCSELS bit of the CMC register.

Set the OSCSELS bit to 1 to select the input port mode (low-speed on-chip oscillator operation mode).

	7	6	5	4	3	2	1	0
CMC	EXCLK	OSCSEL	EXCLKS	OSCSELS		AMPHS1	AMPHS0	AMPH
	0	0	0	1	0	0/1	0/1	0

<3> Select the CPU/peripheral hardware clock with the CSS bit of the CKC register.

Set the CSS bit to 1 to specify CPU clock = f_{SL} (low-speed on-chip oscillator).

	7	6	5	4	3	2	1	0
CKC	CLS	CSS	MCS	MCM0				
	0	1	0	1	0	0	0	0

<4> Confirm that f_{SL} (low-speed on-chip oscillator) is selected as the CPU/peripheral hardware clock (CLS = 1) with the CLS bit of the CKC register.

	7	6	5	4	3	2	1	0
CKC	CLS	CSS	MCS	MCM0				
	1	1	0	1	0	0	0	0

5.6.6 CPU Clock Status Transition Diagram

Figure 5-27 shows the CPU clock status transition diagram of this product.

Figure 5-27. CPU Clock Status Transition Diagram

<R>

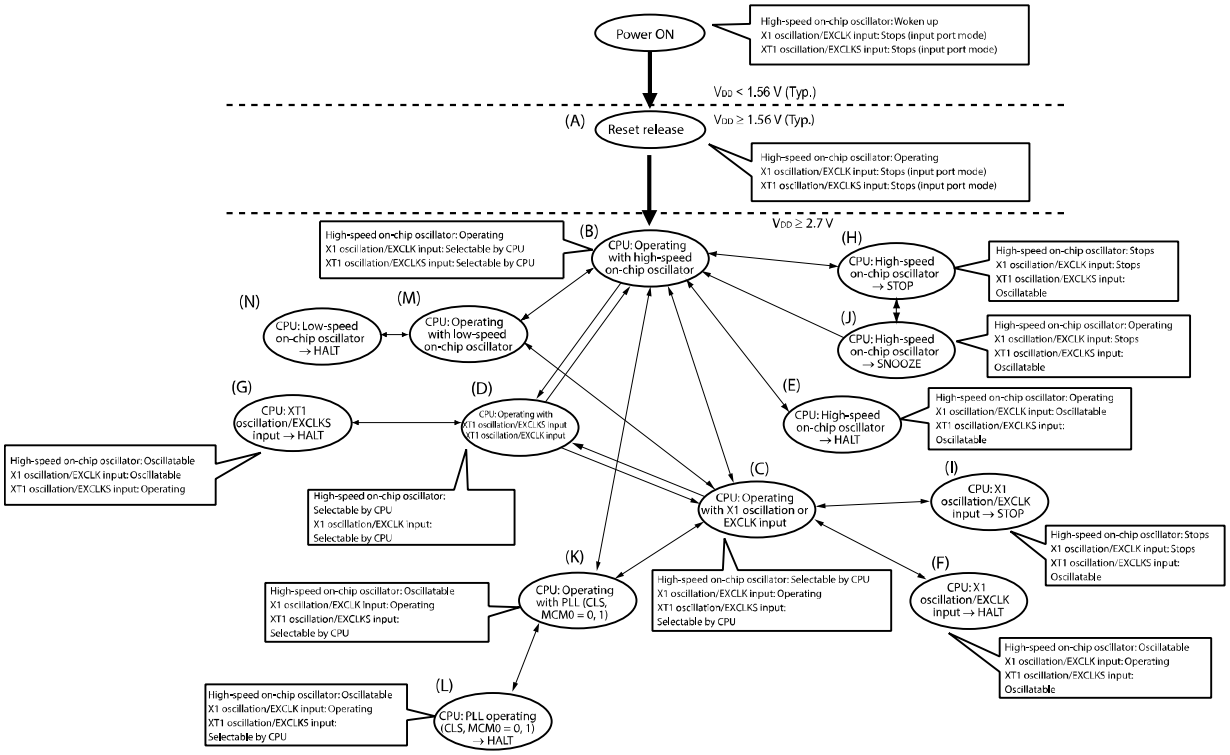

Caution Transitions in the order of (B) → (D) → (C) or (C) → (D) → (B) are prohibited.

The following shows an example of changing the CPU clock and setting the SFR register.

(1) After reset release (A), change the CPU to operating with the high-speed on-chip oscillator clock (B).

(A)→(B): Setting the SFR register is not required (initial status after reset release).

(2) Change the CPU from operating with the high-speed on-chip oscillator clock (B) to operating with the high-speed system clock (C).

- Set the CMC register (EXCLK = 0, OSCSEL = 1, AMPH = x). **Note 1**
- Set the OSTS register. **Note 2**
- Set the MSTOP bit of the CSC register to 0.
- Check the oscillation stabilization time by using the OSTC register. **Note 2**
- Set the MCM0 bit of the CKC register to 1.
- Set the MCS bit of the CKC register to 1.

Notes 1. The clock operation mode control register (CMC) can be written only once by an 8-bit memory manipulation instruction after reset release.

2. Set the oscillation stabilization time of the oscillation stabilization time select register (OSTS) as shown below:
OSTS register setting value ≥ Expected oscillation stabilization time counter status register (OSTC)

(3) Change the CPU from operating with the high-speed on-chip oscillator clock (B) or operating with the high-speed system clock (C) to operating with the subsystem clock (D).

- Set the RTCLPC bit of the OSMC register.
- Set the SELLOSC bit of the CKSEL register to 0.
- Set the CMC register (EXCLKS = x, OSCSELS = 1, AMPHS[1:0] = xx). Note
- Set the XTSTOP bit of the CSC register to 0.
- Wait for oscillation stabilization.
- Set the CSS bit of the CKC register to 1.
- Confirm that the CLS bit of the CKC register is set to 1.

Note The clock operation mode control register (CMC) can be written only once by an 8-bit memory manipulation instruction after reset release.

(4) Change the CPU from operating with the high-speed on-chip oscillator clock (B) or operating with the high-speed system clock (C) to operating with the low-speed on-chip oscillator clock (M).

- Set the SELLOSC bit of the CKSEL register to 1.
- Set the CMC register (EXCLKS = x, OSCSELS = 1). Note
- Set the CSS bit of the CKC register to 1.
- Confirm that the CLS bit of the CKC register is set to 1.

Note The clock operation mode control register (CMC) can be written only once by an 8-bit memory manipulation instruction after reset release.

(5) Change the CPU from operating with the high-speed on-chip oscillator clock (B) or operating with the high-speed system clock (C) to operating with the PLL clock (K).

- Set the PLLCTL register (PLLDIV1 = x, LCKSEL[1:0] = xx, PLLDIV0 = x, PLLMUL = x).
- Wait for the selection of the PLL multiplication value to become effective (After setting the PLLMUL bit, wait for at least 1 μs).
- Set the PLLON bit of the PLLCTL register to 1.
- Confirm that the LOCK bit of the PLLSTS register is set to 1 (checking PLL locked state).
- Set the MDIV [2:0] bits of the MDIV register.
- Set the SELPLL bit of the PLLCTL register to 1.
- Confirm that the SELPLLS bit of the PLLSTS register is set to 1.

(6) Change the CPU from operating with the high-speed system clock (C) to operating with the high-speed on-chip oscillator clock (B).

- Set the HIOSTOP bit of the CSC register to 0. Note
- Set the MCM0 bit of the CKC register to 0.
- Confirm that the MCS bit of the CKC register is set to 0.

Note When oscillation starts from a high-speed on-chip oscillator clock stop state (HIOSTOP = 1), have the software wait for the following oscillation accuracy stabilization time, and then change the clock.
FRQSEL4 of the user option byte (000C2H/020C2H) = 0: 18 μs to 65 μs
FRQSEL4 of the user option byte (000C2H/020C2H) = 1: 18 μs to 105 μs

(7) Change the CPU from operating with the subsystem clock (D) or operating with the low-speed on-chip oscillator clock (M) to operating with the high-speed on-chip oscillator clock (B).

- Set the HIOSTOP bit of the CSC register to 0. Note
- Set the CSS bit of the CKC register to 0.
- Confirm that the CLS bit of the CKC register is set to 0.

Note When oscillation starts from a high-speed on-chip oscillator clock stop state (HIOSTOP = 1), have the software wait for the following oscillation accuracy stabilization time, and then change the clock.
FRQSEL4 of the user option byte (000C2H/020C2H) = 0: 18 μs to 65 μs
FRQSEL4 of the user option byte (000C2H/020C2H) = 1: 18 μs to 105 μs

(8) Change the CPU from operating with the PLL clock (K) to operating with the high-speed system clock (C) or operating with the high-speed on-chip oscillator clock (B).

- Set the SELPLL bit of the PLLCTL register to 0.
- Confirm that the SELPLLS bit of the PLLSTS register is set to 0.

(9) Change the CPU from operating with the subsystem clock (D) or operating with the low-speed on-chip oscillator clock (M) to operating with the high-speed system clock (C).

- Set the CMC register (EXCLK = 0, OSCSEL = 1, AMPH = x). Note 1
- Set the OSTS register. Note 2
- Check the oscillation stabilization time by using the OSTC register. Note 2
- Set the CSS bit of the CKC register to 0.
- Confirm that the CLS bit of the CKC register is set to 0.

Notes 1. The clock operation mode control register (CMC) can be written only once by an 8-bit memory manipulation instruction after reset release.

2. Set the oscillation stabilization time of the oscillation stabilization time select register (OSTS) as shown below:
OSTS register setting value > Expected oscillation stabilization time counter status register (OSTC)

(10) Change the CPU from each operation mode to HALT mode.

- The CPU changes from operating with the high-speed on-chip oscillator clock (B) to HALT mode (E).
- The CPU changes from operating with the high-speed system clock (C) to HALT mode (F).
- The CPU changes from operating with the subsystem clock (D) to HALT mode (G).
- The CPU changes from operating with the PLL clock (K) to HALT mode (L).
- The CPU changes from operating with the low-speed on-chip oscillator clock (M) to HALT mode (N).
  - Execute the HALT instruction.

(11) The CPU changes from operating with the high-speed on-chip oscillator clock (B) to STOP mode (H).

- Stop peripheral functions that are not operated in STOP mode.
- Execute the STOP instruction.

(12) The CPU changes from operating with the high-speed system clock (C) to STOP mode (I).

- Stop peripheral functions that are not operated in STOP mode.
- Set the OSTS register. Note
- Execute the STOP instruction.

Note Set the oscillation stabilization time of the oscillation stabilization time select register (OSTS) as shown below:
OSTS register setting value > Expected oscillation stabilization time counter status register (OSTC)

(13) Change the CPU from STOP mode (H) to SNOOZE mode (J).

For details about the settings for entering SNOOZE mode, see 23.3.3 SNOOZE Mode and peripheral functions that are used.

Remarks 1. "x" shown in the settings of the SFR register for changing each mode represents an arbitrary value (the settings to be used).

2. For details about transition and recovery to the standby function (HALT mode, STOP mode, and SNOOZE mode), see **CHAPTER 23 STANDBY FUNCTION** and peripheral functions that are used.

5.6.7 Conditions before Changing CPU Clock and Processing after Changing CPU Clock

The following table shows the conditions before changing the CPU clock and the processing after changing the CPU clock.

Table 5-3. Changing CPU Clock (1/7)

<R>

CPU Clock		Conditions before Change	Processing after Change
Before Change	After Change		
High-speed on-chip oscillator clock	X1 clock	X1 oscillation is stable. • OSCSEL = 1, EXCLK = 0, MSTOP = 0 • After elapse of oscillation stabilization time	Stopping the high-speed on-chip oscillator (HIOSTOP = 1) can reduce the operating current after checking that the CPU clock is changed to the clock indicated by "After Change" in the table.
	External main system clock	External clock input from the EXCLK pin is enabled. • OSCSEL = 1, EXCLK = 1, MSTOP = 0	
	XT1 clock	XT1 oscillation is stable, and the subsystem clock is selected as the subsystem/low-speed on-chip oscillator select clock. • OSCSELS = 1, EXCLKS = 0, XTSTOP = 0 • SELLOSC = 0 • After elapse of oscillation stabilization time	
	External subsystem clock	External clock input from the EXCLKS pin is enabled, and the subsystem clock is selected as the subsystem/low-speed on-chip oscillator select clock. • OSCSELS = 1, EXCLKS = 1, XTSTOP = 0 • SELLOSC = 0	
	Low-speed on-chip oscillator clock	The low-speed on-chip oscillator starts oscillation, and the low-speed on-chip oscillator clock is selected as the subsystem/low-speed on-chip oscillator select clock. • OSCSELS = 1, SELLOSC = 1	
	PLL clock	PLL oscillation is stable. • LOCK = 1, PLLON = 1	The high-speed on-chip oscillator cannot be stopped because it is the PLL input clock.

Remark For details about the register flag settings for stopping the target clock during the processing after change and conditions before the clock is stopped, see **5.6.9 Conditions Before Clock Oscillation Is Stopped**.

Table 5-3. Changing CPU Clock (2/7)

CPU Clock		Conditions before Change	Processing after Change
Before Change	After Change		
<R> X1 clock	High-speed on-chip oscillator clock	The high-speed on-chip oscillator starts oscillation. ● HIOSTOP = 0	X1 oscillation can be stopped. (MSTOP = 1) after checking that the CPU clock is changed to the clock indicated by "After Change" in the table.
<R>	External main system clock	Prohibited to change. (To change the CPU clock, clear the settings first and then reset the settings.)	—
	XT1 clock	XT1 oscillation is stable, and the subsystem clock is selected as the subsystem/low-speed on-chip oscillator select clock. ● OSCSELS = 1, EXCLKS = 0, XTSTOP = 0 ● SELLOSC = 0 ● After elapse of oscillation stabilization time	X1 oscillation can be stopped (MSTOP = 1) after checking that the CPU clock is changed to the clock indicated by "After Change" in the table.
	External subsystem clock	External clock input from the EXCLKS pin is enabled, and the subsystem clock is selected as the subsystem/low-speed on-chip oscillator select clock. ● OSCSELS = 1, EXCLKS = 1, XTSTOP = 0 ● SELLOSC = 0	
	Low-speed on-chip oscillator clock	The low-speed on-chip oscillator starts oscillation, and the low-speed on-chip oscillator clock is selected as the subsystem/low-speed on-chip oscillator select clock. ● OSCSELS = 1, SELLOSC = 1	
	PLL clock	PLL oscillation is stable. ● LOCK = 1, PLLON = 1	The X1 clock cannot be stopped because it is the PLL input clock.

Remark For details about the register flag settings for stopping the target clock during the processing after change and conditions before the clock is stopped, see **5.6.9 Conditions Before Clock Oscillation Is Stopped**.

Table 5-3. Changing CPU Clock (3/7)

CPU Clock		Conditions before Change	Processing after Change
Before Change	After Change		
External main system clock	High-speed on-chip oscillator clock	The high-speed on-chip oscillator starts oscillation. • HIOSTOP = 0	The external main system clock input can be disabled. (MSTOP = 1)
	X1 clock	Prohibited to change. (To change the CPU clock, clear the settings first and then reset the settings.)	—
	XT1 clock	XT1 oscillation is stable, and the subsystem clock is selected as the subsystem/low-speed on-chip oscillator select clock. • OSCSELS = 1, EXCLKS = 0, XTSTOP = 0 • SELLOSC = 0 • After elapse of oscillation stabilization time	The external main system clock input can be disabled. (MSTOP = 1)
	External subsystem clock	External clock input from the EXCLKS pin is enabled, and the subsystem clock is selected as the subsystem/low-speed on-chip oscillator select clock. • OSCSELS = 1, EXCLKS = 1, XTSTOP = 0 • SELLOSC = 0	
	Low-speed on-chip oscillator clock	The low-speed on-chip oscillator starts oscillation, and the low-speed on-chip oscillator clock is selected as the subsystem/low-speed on-chip oscillator select clock. • OSCSELS = 1, SELLOSC = 1	
	PLL clock	PLL oscillation is stable. • LOCK = 1, PLLON = 1	The external main system clock cannot be stopped because it is the PLL input clock.

Remark For details about the register flag settings for stopping the target clock during the processing after change and conditions before the clock is stopped, see **5.6.9 Conditions Before Clock Oscillation Is Stopped**.

Table 5-3. Changing CPU Clock (4/7)

CPU Clock		Conditions before Change	Processing after Change
Before Change	After Change		
XT1 clock	High-speed on-chip oscillator clock	The high-speed on-chip oscillator starts oscillation, and the high-speed on-chip oscillator clock is selected as the main system clock. ● HIOSTOP = 0, MCS = 0	XT1 oscillation can be stopped. (XTSTOP = 1)
	X1 clock	X1 oscillation is stable, and the high-speed system clock is selected as the main system clock. ● OSCSEL = 1, EXCLK = 0, MSTOP = 0 ● After elapse of oscillation stabilization time ● MCS = 1	
	External main system clock	External clock input from the EXCLK pin is enabled, and the high-speed system clock is selected as the main system clock. ● OSCSEL = 1, EXCLK = 1, MSTOP = 0 ● SELLOSC = 0, MCS = 1	
	External subsystem clock	Prohibited to change. (To change the CPU clock, clear the settings first and then reset the settings.)	—
	Low-speed on-chip oscillator clock	Prohibited to change. (To change the CPU clock, specify the main system/PLL select clock as the CPU clock first and then reset the settings.)	

Remark For details about the register flag settings for stopping the target clock during the processing after change and conditions before the clock is stopped, see **5.6.9 Conditions Before Clock Oscillation Is Stopped**.

Table 5-3. Changing CPU Clock (5/7)

CPU Clock		Conditions before Change	Processing after Change
Before Change	After Change		
External subsystem clock	High-speed on-chip oscillator clock	The high-speed on-chip oscillator starts oscillation, and the high-speed on-chip oscillator clock is selected as the main system clock. ● HIOSTOP = 0, MCS = 0	The external subsystem clock input can be disabled. (XTSTOP = 1)
	X1 clock	X1 oscillation is stable, and the high-speed system clock is selected as the main system clock. ● OSCSEL = 1, EXCLK = 0, MSTOP = 0 ● After elapse of oscillation stabilization time ● MCS = 1	
	External main system clock	External clock input from the EXCLK pin is enabled, and the high-speed system clock is selected as the main system clock. ● OSCSEL = 1, EXCLK = 1, MSTOP = 0 ● SELLOSC = 0, MCS = 1	
	XT1 clock	Prohibited to change. (To change the CPU clock, clear the settings first and then reset the settings.)	—
	Low-speed on-chip oscillator clock	Prohibited to change. (To change the CPU clock, specify the main system/PLL select clock as the CPU clock first and then reset the settings.)	

Remark For details about the register flag settings for stopping the target clock during the processing after change and conditions before the clock is stopped, see **5.6.9 Conditions Before Clock Oscillation Is Stopped**.

Table 5-3. Changing CPU Clock (6/7)

CPU Clock		Conditions before Change	Processing after Change
Before Change	After Change		
Low-speed on-chip oscillator clock	High-speed on-chip oscillator clock	The high-speed on-chip oscillator starts oscillation, and the high-speed on-chip oscillator clock is selected as the main system clock. ● HIOSTOP = 0, MCS = 0	The low-speed on-chip oscillator can be stopped. (SELLOSC = 0, WUTMMCK0 = 0)
	X1 clock	X1 oscillation is stable, and the high-speed system clock is selected as the main system clock. ● OSCSEL = 1, EXCLK = 0, MSTOP = 0 ● After elapse of oscillation stabilization time ● MCS = 1	
	External main system clock	External clock input from the EXCLK pin is enabled, and the high-speed system clock is selected as the main system clock. ● OSCSEL = 1, EXCLK = 1, MSTOP = 0 ● SELLOSC = 0, MCS = 1	
	XT1 clock	Prohibited to change. (To change the CPU clock, specify the main system/PLL select clock as the CPU clock first and then reset the settings.)	—
	External subsystem clock	Prohibited to change. (To change the CPU clock, specify the main system/PLL select clock as the CPU clock first and then reset the settings.)	

Remark For details about the register flag settings for stopping the target clock during the processing after change and conditions before the clock is stopped, see **5.6.9 Conditions Before Clock Oscillation Is Stopped**.

Table 5-3. Changing CPU Clock (7/7)

CPU Clock		Conditions before Change	Processing after Change
Before Change	After Change		
PLL clock	High-speed on-chip oscillator clock	The high-speed on-chip oscillator starts oscillation, and the high-speed on-chip oscillator clock is selected as the main system clock. ● HIOSTOP = 0, MCS = 0	The PLL clock can be stopped. (PLLON = 0)
	X1 clock	X1 oscillation is stable, and the high-speed system clock is selected as the main system clock. ● OSCSEL = 1, EXCLK = 0, MSTOP = 0 ● After elapse of oscillation stabilization time ● MCS = 1	
	External main system clock	External clock input from the EXCLK pin is enabled, and the high-speed system clock is selected as the main system clock. ● OSCSEL = 1, EXCLK = 1, MSTOP = 0 ● SELLOSC = 0, MCS = 1	

Remark For details about the register flag settings for stopping the target clock during the processing after change and conditions before the clock is stopped, see **5.6.9 Conditions Before Clock Oscillation Is Stopped**.

5.6.8 Time Required for Switchover of CPU Clock, Main System/PLL Select Clock, and Main System Clock

By setting bits 4 and 6 (MCM0, CSS) of the system clock control register (CKC), bits 0 to 2 (MDIV0 to MDIV2) of the f_{MP} clock division register (MDIV), and bit 0 (SELLOSC) of the clock select register (CKSEL), the CPU clock can be switched (between the main system/PLL select clock and the subsystem/low-speed on-chip oscillator select clock), the main system/PLL select clock can be switched (between the main system clock and the PLL clock), the main system clock can be switched (between the high-speed on-chip oscillator clock and the high-speed system clock), the subsystem/low-speed on-chip oscillator select clock can be switched (between the subsystem clock and the low-speed on-chip oscillator clock), and the frequency division ratio of the main system/PLL select clock can be changed.

The actual switchover operation is not performed immediately after rewriting to the CKC or MDIV register; operation continues on the pre-switchover clock for several clocks. The subsystem/low-speed on-chip oscillator select clock is switched immediately after rewriting to the CKSEL register.

Whether the CPU is operating on the main system/PLL select clock or the subsystem/low-speed on-chip oscillator select clock can be ascertained using bit 7 (CLS) of the CKC register.

Whether the main system/PLL select clock is operating on the main system clock or the PLL clock can be ascertained using bit 3 (SELPLLS) of the PLL status register (PLLSTS).

Whether the main system clock is operating on the high-speed on-chip oscillator clock or the high-speed system clock can be ascertained using bit 5 (MCS) of the CKC register.

When the CPU clock is switched, the peripheral hardware clock is also switched.

Table 5-4. Maximum Time Required for Clock Switchover

Clock A	Switching directions	Clock B	Type
f_{MP}	←→ (change of the frequency division ratio)	f_{MP}	Type 1 (Table 5-5)
f_{IH}	←→	f_{MX}	Type 2 (Table 5-6)
f_{MP}	←→	f_{SL}	Type 3 (Table 5-7)
f_{MAIN}	←→	f_{PLL}	Type 4 (Table 5-8)

Table 5-5. Maximum Time Required for Type 1

Set Value Before Switchover	Set Value After Switchover	
	Clock A	Clock B
Clock A		1 + f_A/f_B clock
Clock B	1 + f_B/f_A clock	

Table 5-6. Maximum Time Required for Type 2 (1)[Note1]

Set Value Before Switchover		Set Value After Switchover	
MCM0		MCM0	
		0 ($f_{MAIN} = f_{IH}$)	1 ($f_{MAIN} = f_{MX}$)
0 ($f_{MAIN} = f_{IH}$)	$f_{MX} \geq f_{IH}$		3 clocks
	$f_{MX} < f_{IH}$		3 f_{IH}/f_{MX} clock
1 ($f_{MAIN} = f_{MX}$)	$f_{MX} > f_{IH}$	3 f_{MX}/f_{IH} clock	
	$f_{MX} \leq f_{IH}$	3 clocks	

Note 1. For $f_{IH} \leq 32$ MHz

(**Remarks** are listed on the next page.)

Table 5-6. Maximum Time Required for Type 2 (2)[Note 1]

Set Value Before Switchover	Set Value After Switchover	
MCM0	MCM0	
	0 ($f_{MAIN} = f_{IH}$)	1 ($f_{MAIN} = f_{MX}$)
0 ($f_{MAIN} = f_{IH}$)		6 f_{IH}/f_{MX} clock
1 ($f_{MAIN} = f_{MX}$)	3 clocks	

Note 1. For $f_{IH} > 32$ MHz

Table 5-7. Maximum Time Required for Type 3

Set Value Before Switchover	Set Value After Switchover	
CSS	CSS	
	0 ($f_{CLK} = f_{MP}$)	1 ($f_{CLK} = f_{SL}$)
0 ($f_{CLK} = f_{MP}$)		1 + 2 f_{MP}/f_{SL} clock
1 ($f_{CLK} = f_{SL}$)	3 clocks	

Table 5-8. Maximum Time Required for Type 4

Set Value Before Switchover	Set Value After Switchover	
SELPLL	SELPLL	
	0 ($f_{MP} = f_{MAIN}$)	1 ($f_{MP} = f_{PLL}$)
0 ($f_{MP} = f_{MAIN}$)		2 clocks
1 ($f_{MP} = f_{PLL}$)	2 f_{PLL}/f_{MAIN} clock	

Remarks 1. The number of clocks listed in Tables 5-5 to 5-8 is the number of CPU clocks before switchover.

2. Calculate the number of clocks in Tables 5-5 to 5-8 by removing the decimal portion.

Example When switching the main system clock from the high-speed on-chip oscillator clock (with 16 MHz) to the high-speed system clock
(@ oscillation with f_{IH} = 16 MHz, f_{MX} = 10 MHz)
3 $f_{IH}/f_{MX} = 3 \times 1.6 = 4.8 \rightarrow 5$ clocks

5.6.9 Conditions Before Clock Oscillation Is Stopped

The following lists the register flag settings for stopping the clock oscillation (disabling external clock input) and conditions before the clock oscillation is stopped.

<R> Before stopping the clock oscillation, check the conditions.

Table 5-9. Conditions Before the Clock Oscillation Is Stopped and Flag Settings

Clock	Conditions Before Clock Oscillation Is Stopped (External Clock Input Disabled)	Flag Settings of SFR Register
High-speed on-chip oscillator clock	MCS = 1 or CLS = 1 (The CPU is operating on a clock other than the high-speed on-chip oscillator clock.)	HIOSTOP = 1
X1 clock External main system clock	MCS = 0 or CLS = 1 (The CPU is operating on a clock other than the high-speed system clock.)	MSTOP = 1
PLL clock	SELPLLS = 0 (The CPU is operating on a clock other than the PLL clock.)	PLLON = 0
XT1 clock External subsystem clock	CLS = 0 (The CPU is operating on a clock other than the subsystem/low-speed on-chip oscillator clock.)	XTSTOP = 1
Low-speed on-chip oscillator clock	CLS = 0 (The CPU is operating on a clock other than the subsystem/low-speed on-chip oscillator clock.)	SELLOSC = 0 and WUTMMCK0 = 0

Remark MCS: Bit 5 of the system clock control register (CKC)
CLS: Bit 7 of the system clock control register (CKC)
HIOSTOP: Bit 0 of the clock operation status control register (CSC)
XTSTOP: Bit 6 of the clock operation status control register (CSC)
MSTOP: Bit 7 of the clock operation status control register (CSC)
SELPLLS: Bit 3 of the PLL status register (PLLSTS)
PLLON: Bit 0 of the PLL control register (PLLCTL)
SELLOSC: Bit 1 of the clock select register (CKSEL)
WUTMMCK0: Bit 4 of the operation speed mode control register (OSMC)

5.7 Usage Notes

5.7.1 CPU/Peripheral Hardware Clock

The clock set by the CSS, MCM0, SELPLL, and MDIV2 to MDIV0 bits is supplied to the CPU and peripheral hardware modules. If the CPU clock is changed, the clock supplied to the peripheral hardware modules is simultaneously changed. Therefore, when changing the CPU/peripheral hardware clock, operation of the peripheral hardware modules needs to be stopped before the change.

5.7.2 High-Speed On-Chip Oscillator

When the FRQSEL3 bit is set to 0 (high-speed on-chip oscillator = 48/24/12/6/3 MHz), and moreover the CPU/peripheral hardware clock is selected as the PLL clock, the CPU/peripheral hardware clock frequency (f_{CLK}) must not be set to 32 MHz.

CHAPTER 6 TIMER ARRAY UNIT

The number of units or channels of the timer array unit differs, depending on the product.

Units	Channels	Group A	Groups B, C, and D	Group E
Unit 0	Channel 0	√	√	√
	Channel 1	√	√	√
	Channel 2	√	√	√
	Channel 3	√	√	√
	Channel 4	√	√	√
	Channel 5	√	√	√
	Channel 6	√	√	√
	Channel 7	√	√	√
Unit 1	Channel 0	–	√	√
	Channel 1	–	√	√
	Channel 2	–	√	√
	Channel 3	–	√	√
	Channel 4	–	–	√
	Channel 5	–	–	√
	Channel 6	–	–	√
	Channel 7	–	–	√

Remark Group A: RL78/F13 (LIN incorporated) products with 20, 30, 32, 48, or 64 pins and 16 Kbytes to 64 Kbytes of code flash memory

Group B: RL78/F13 (LIN incorporated) products with 48 or 64 pins and 96 Kbytes to 128 Kbytes of code flash memory or RL78/F13 (LIN incorporated) products with 80 pins and 64 Kbytes to 128 Kbytes of code flash memory

Group C: RL78/F13 (CAN incorporated) products with 30, 32, 48, 64, or 80 pins and 32 Kbytes to 128 Kbytes of code flash memory

Group D: RL78/F14 products with 30, 32, 48, 64, or 80 pins and 48 Kbytes to 96 Kbytes of code flash memory

Group E: RL78/F14 products with 48, 64, or 80 pins and 128 Kbytes to 256 Kbytes of code flash memory or RL78/F14 products with 100 pins and 64 Kbytes to 256 Kbytes of code flash memory

Cautions
1. **The presence or absence of timer I/O pins depends on the product. See Table 6-2 Timer I/O Pins provided in Each Product for details.**
2. **Most of the following descriptions in this chapter use the Group E products as an example.**

The timer array unit has eight 16-bit timers.

Each 16-bit timer is called a channel and can be used as an independent timer. In addition, two or more “channels” can be used to create a high-accuracy timer.

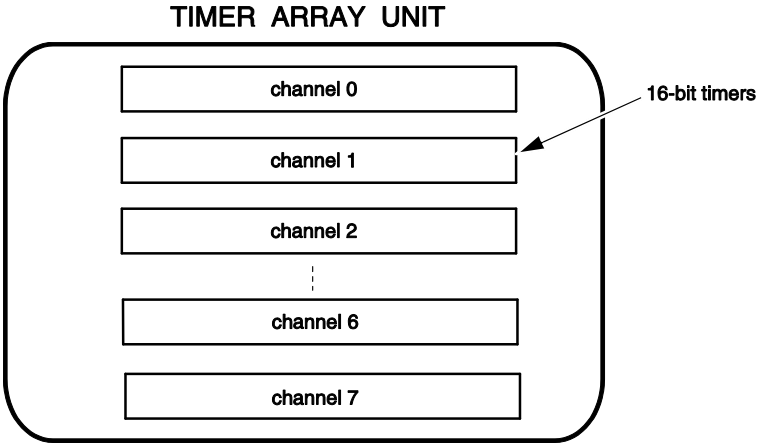

For details about each function, see the table below.

Independent channel operation function	Simultaneous channel operation function
• Interval timer (→ refer to 6.7.1) • Square wave output (→ refer to 6.7.1) • External event counter (→ refer to 6.7.2) • Divider function (→ refer to 6.7.3) • Input pulse interval measurement (→ refer to 6.7.4) • Measurement of high-/low-level width of input signal (→ refer to 6.7.5) • Delay counter (→ refer to 6.7.6)	• One-shot pulse output(→ refer to 6.8.1) • PWM output(→ refer to 6.8.2) • Multiple PWM output(→ refer to 6.8.3)

It is possible to use the 16-bit timer of channels 1 and 3 of the units 0 and 1 as two 8-bit timers (higher and lower). The functions that can use channels 1 and 3 as 8-bit timers are as follows:

- Interval timer
- External event counter (lower 8-bit timer only)
- Delay counter (lower 8-bit timer only)

Channel 7 of timer array unit 0 can be used to realize LIN-bus communication operating in combination with UART0 of the serial array unit.

6.1 Functions of Timer Array Unit

Timer array unit has the following functions.

6.1.1 Independent channel operation function

By operating a channel independently, it can be used for the following purposes without being affected by the operation mode of other channels.

(1) Interval timer

Each timer of a unit can be used as a reference timer that generates an interrupt (INTTMmn) at fixed intervals.

(2) Square wave output

A toggle operation is performed each time INTTMmn interrupt is generated and a square wave with a duty factor of 50% is output from a timer output pin (TOmn).

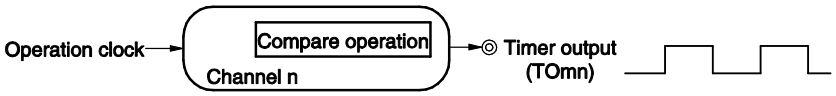

(3) External event counter

Each timer of a unit can be used as an event counter that generates an interrupt when the number of the valid edges of a signal input to the timer input pin (TImn) has reached a specific value.

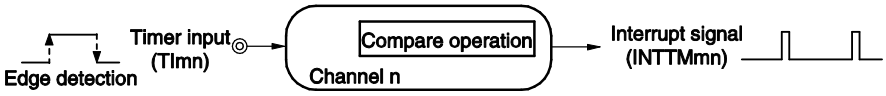

(4) Divider function

A clock input from a timer input pin (TImn) is divided and output from an output pin (TOmn).

<R> 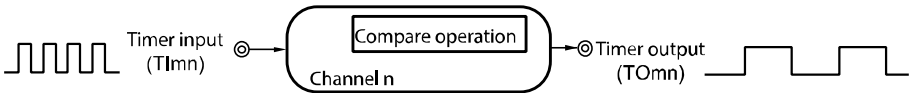

<R> Set the TImn and TOmn pins so that they are different from each other by the peripheral I/O redirection registers 0,
<R> 1, 2, and 3 (PIOR0, PIOR2, PIOPR2, and PIOR3).

(5) Input pulse interval measurement

Counting is started by the valid edge of a pulse signal input to a timer input pin (TImn). The count value of the timer is captured at the valid edge of the next pulse. In this way, the interval of the input pulse can be measured.

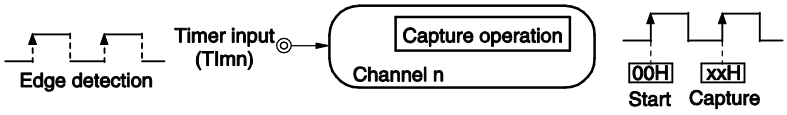

(**Remarks** are listed on the next page.)

(6) Measurement of high-/low-level width of input signal

Counting is started by a single edge of the signal input to the timer input pin (TImn), and the count value is captured at the other edge. In this way, the high-level or low-level width of the input signal can be measured.

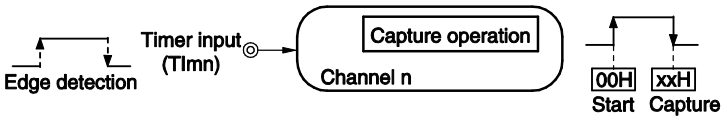

(7) Delay counter

Counting is started at the valid edge of the signal input to the timer input pin (TImn), and an interrupt is generated after any delay period.

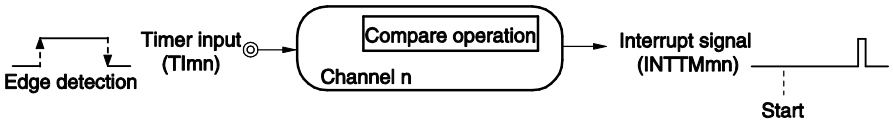

Remarks 1 m: Unit number (m = 0, 1), n: Channel number (n = 0 to 7)

2. The presence or absence of timer I/O pins of channels 0 to 7 depends on the product. See **Table 6-2 Timer I/O Pins provided in Each Product** for details.

6.1.2 Simultaneous channel operation function

By using the combination of a master channel (a reference timer mainly controlling the cycle) and slave channels (timers operating according to the master channel), channels can be used for the following purposes.

(1) One-shot pulse output

Two channels are used as a set to generate a one-shot pulse with a specified output timing and a specified pulse width.

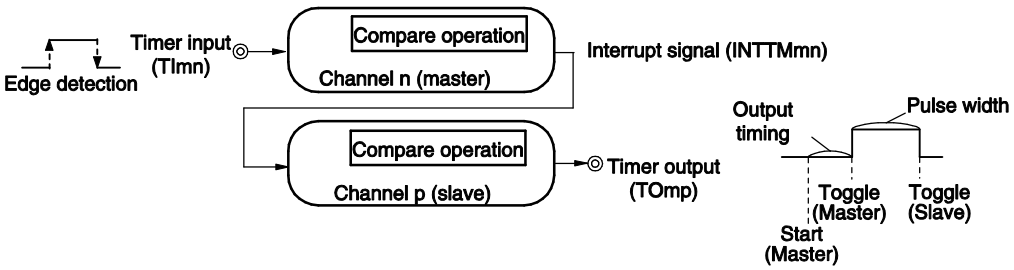

(2) PWM (Pulse Width Modulation) output

Two channels are used as a set to generate a pulse with a specified period and a specified duty factor.

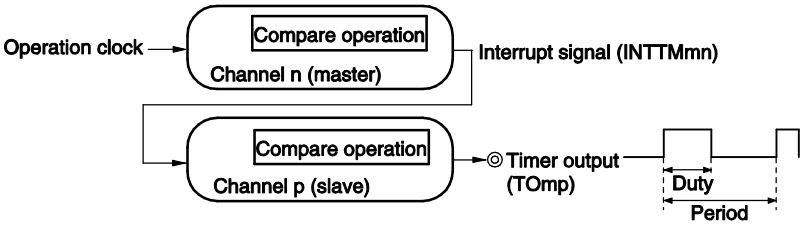

(**Caution** and **Remark** are is listed on the next page.)

(3) Multiple PWM (Pulse Width Modulation) output

By extending the PWM function and using one master channel and two or more slave channels, up to seven types of PWM signals that have a specific period and a specified duty factor can be generated.

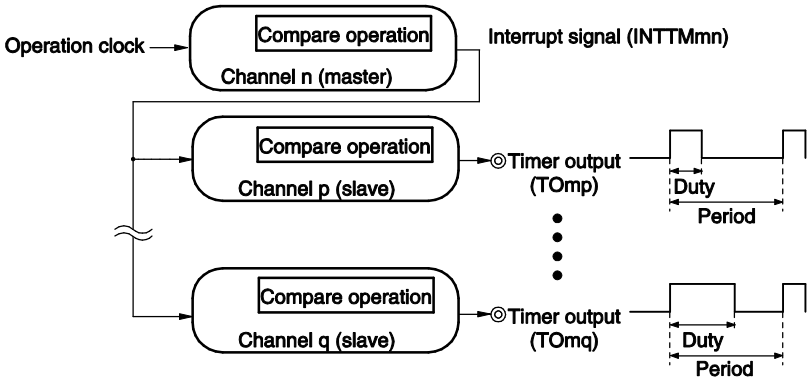

Caution There are several rules for using simultaneous channel operation function.
For details, see 6.4.1 Basic rules of simultaneous channel operation function.

Remark m: Unit number (m = 0, 1), n: Channel number (n = 0 to 7),
p, q: Slave channel number ($n < p < q \leq 7$)

6.1.3 8-bit timer operation function (channels 1 and 3 only)

The 8-bit timer operation function makes it possible to use a 16-bit timer channel in a configuration consisting of two 8-bit timer channels. This function can only be used for channels 1 and 3.

Caution There are several rules for using 8-bit timer operation function.
For details, see 6.4.2 Basic rules of 8-bit timer operation function (channels 1 and 3 only).

6.1.4 LIN-bus supporting function (channel 7 of unit 0 only)

Timer array unit is used to check whether signals received in LIN-bus communication match the LIN-bus communication format.

(1) Detection of wakeup signal

The timer starts counting at the falling edge of a signal input to the serial data input pin (RxD0) of UART0 and the count value of the timer is captured at the rising edge. In this way, a low-level width can be measured. If the low-level width is greater than a specific value, it is recognized as a wakeup signal.

(2) Detection of sync break field

The timer starts counting at the falling edge of a signal input to the serial data input pin (RxD0) of UART0 after a wakeup signal is detected, and the count value of the timer is captured at the rising edge. In this way, a low-level width is measured. If the low-level width is greater than a specific value, it is recognized as a sync break field.

(3) Measurement of pulse width of sync field

After a sync break field is detected, the low-level width and high-level width of the signal input to the serial data input pin (RxD0) of UART0 are measured. From the bit interval of the sync field measured in this way, a baud rate is calculated.

Remark For details about setting up the operations used to implement the LIN-bus, see **6.7.5 Operation as input signal high-/low-level width measurement**.

6.2 Configuration of Timer Array Unit

Timer array unit includes the following hardware.

Table 6-1. Configuration of Timer Array Unit

Item	Configuration
Timer/counter	Timer count register mn (TCRmn)
Register	Timer data register mn (TDRmn)
Timer input	TI00 to TI07, TI10 to TI17 Note 1, RxD0 pin (for LIN-bus)
Timer output	TO00 to TO07, TO10 to TO17 pins Note 1, output controller
Control registers	<Registers of unit setting block> • Peripheral enable register 0 (PER0) • Timer clock select register m (TPSm) • Timer channel enable status register m (TEm) • Timer channel start register m (TSm) • Timer channel stop register m (TTm) • Timer input select register 0 (TIS0) • Timer input select register 1 (TIS1) • Timer input select register 2 (TIS2) • Timer output enable register m (TOEm) • Timer output register m (TOm) • Timer output level register m (TOLm) • Timer output mode register m (TOMm) • PWM output delay control register 1 (PWMDLY1) • PWM output delay control register 2 (PWMDLY2) Note 3
	<Registers of each channel> • Timer mode register mn (TMRmn) • Timer status register mn (TSRmn) • Noise filter enable registers 1, 2 (NFEN1, NFEN2) • Port mode register (PMxx) Note 2 • Port register (Pxx) Note 2

Notes 1. The presence or absence of timer I/O pins of channel 0 to 7 of the unit depends on the product. See **Table 6-2 Timer I/O Pins provided in Each Product** for details.

2. The port mode registers (PMxx) and port registers (Pxx) to be set differ depending on the product. For details, **see 6.3.16 Port mode registers 1, 3, 4, 7, 12 (PM1, PM3, PM4, PM7, PM12).**

3. Bit allocation differs depending on the group.

Remark m: Unit number (m = 0, 1), n: Channel number (n = 0 to 7)

The presence or absence of timer I/O pins in each timer array unit channel depends on the product.

Table 6-2. Timer I/O Pins provided in Each Product

Timer array unit channels		I/O Pins of Each Product		
		Group E Products	Group B, C, and D Products	Group A Products
Unit 0	Channel 0	P17/TI00/TO00		
	Channel 1	P30/TI01/TO01		
	Channel 2	P16/TI02/TO02		
	Channel 3	P125/TI03/TO03		
	Channel 4	P13/TI04/TO04		
	Channel 5	P15/TI05/TO05		
	Channel 6	P14/TI06/TO06		
	Channel 7	P120/TI07/TO07		
Unit 1	Channel 0	P41/TI10/TO10		×
	Channel 1	P12/TI11/TO11		×
	Channel 2	P11/TI12/TO12		×
	Channel 3	P10/TI13/TO13		×
	Channel 4	P31/TI14/TO14	×	×
	Channel 5	P70/TI15/TO15	×	×
	Channel 6	P32/TI16/TO16	×	×
	Channel 7	P71/TI17/TO17	×	×

Remarks 1. When timer input and timer output are shared by the same pin, either only timer input or only timer output can be used.

2. ×: The channel is not available.

3. For details on Groups A to E, see **the first page of CHAPTER 6.**

Figures 6-1 to 6-3 show the block diagrams of the timer array unit.

Figure 6-1. Entire Configuration of Timer Array Unit 0 (Example: 100-pin products)

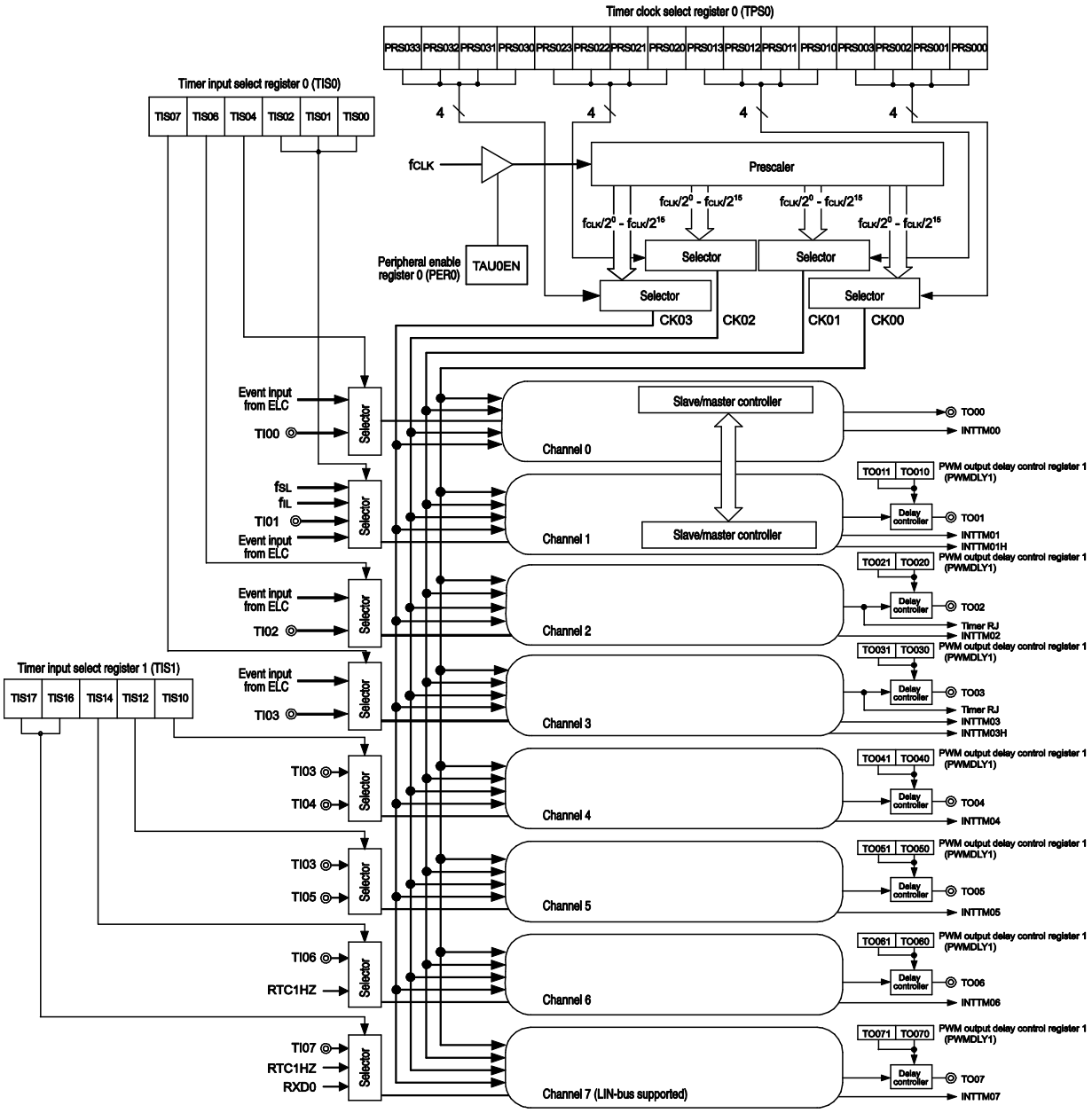

Remark f_{SL}: Sub/low-speed on-chip oscillator clock

f_{IL}: Low-speed on-chip oscillator clock frequency

Figure 6-2. Entire Configuration of Timer Array Unit 1 (Example: Groups B, C, and D)

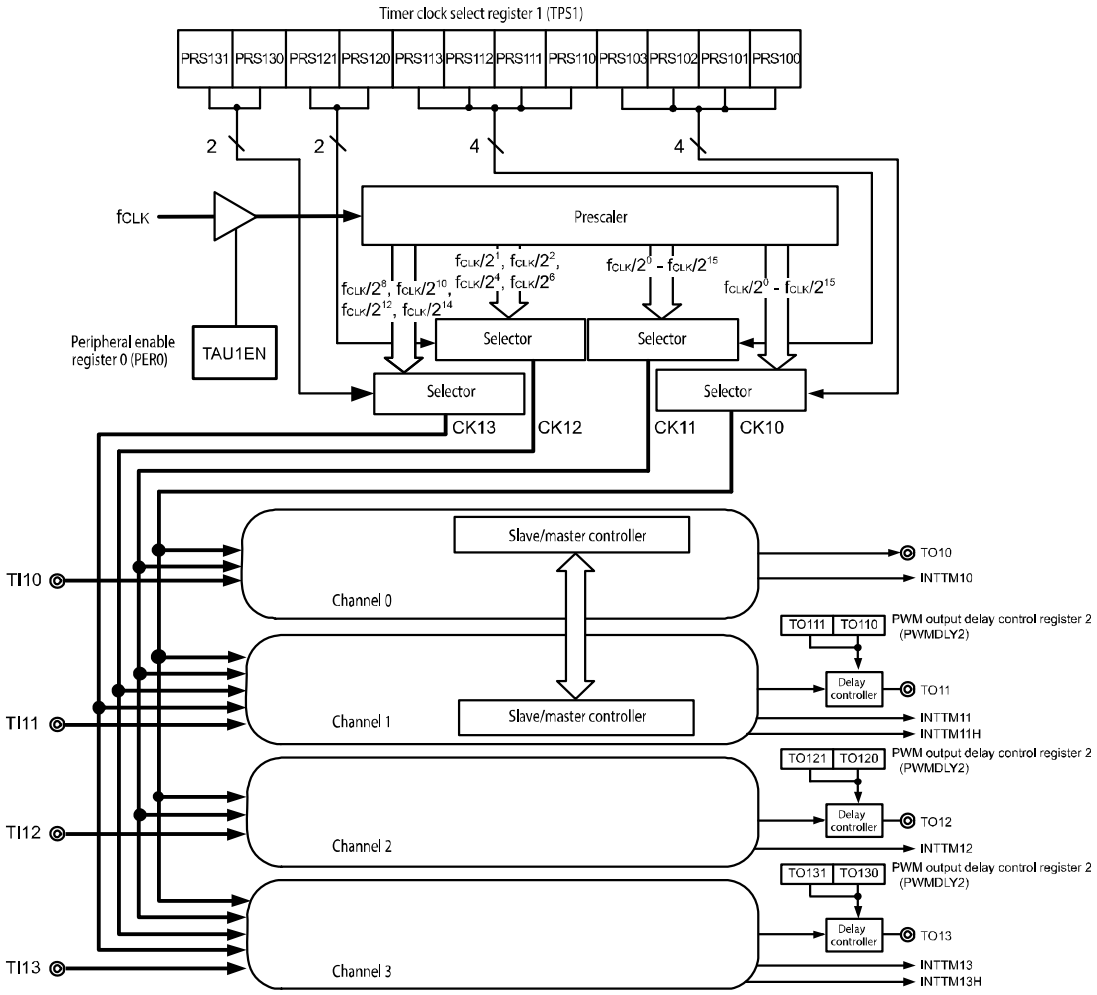

<R>

Figure 6-3. Entire Configuration of Timer Array Unit 1 (Example: Group E)

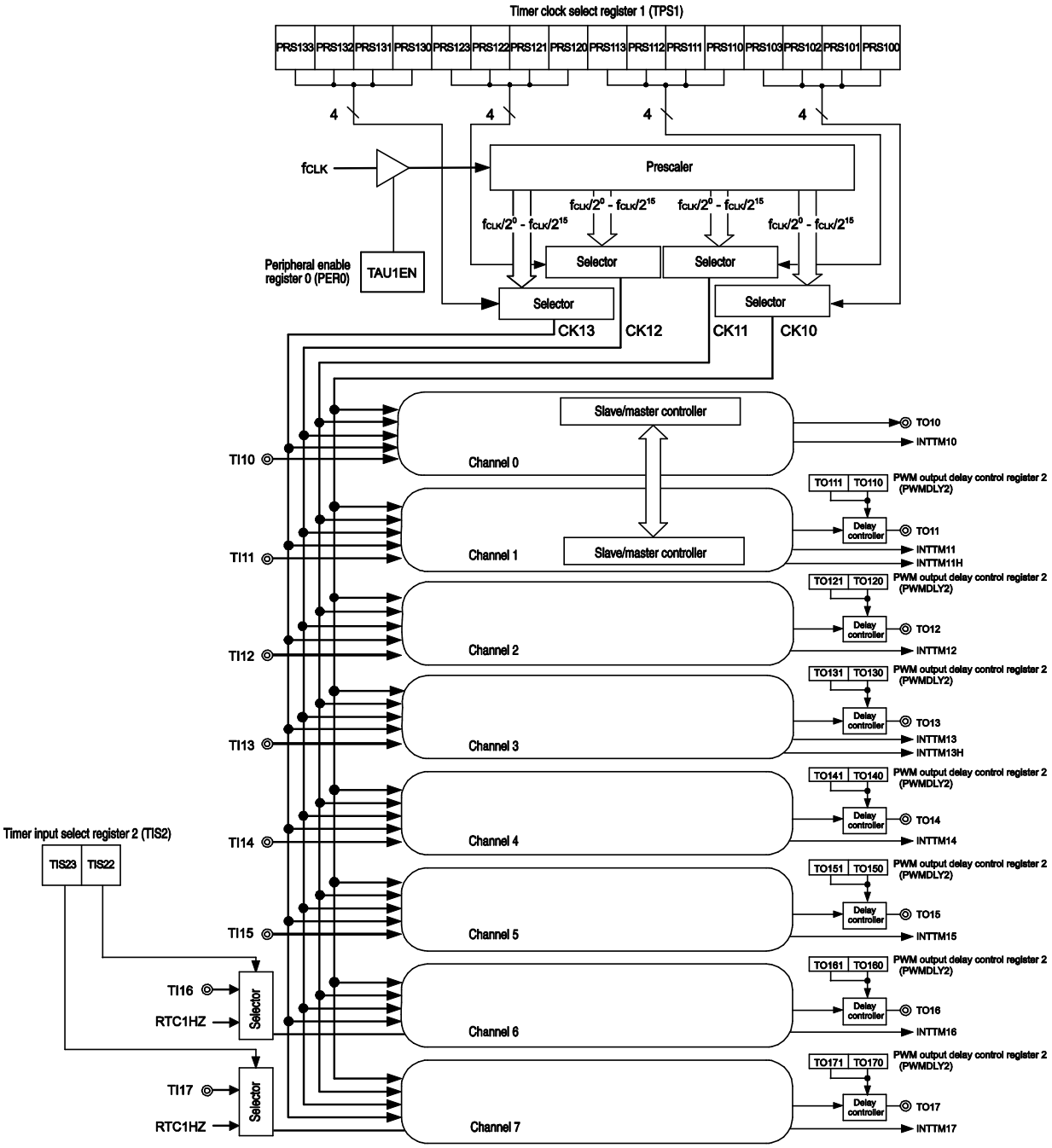

Figure 6-4. Internal Block Diagram of Channel of Timer Array Unit 0

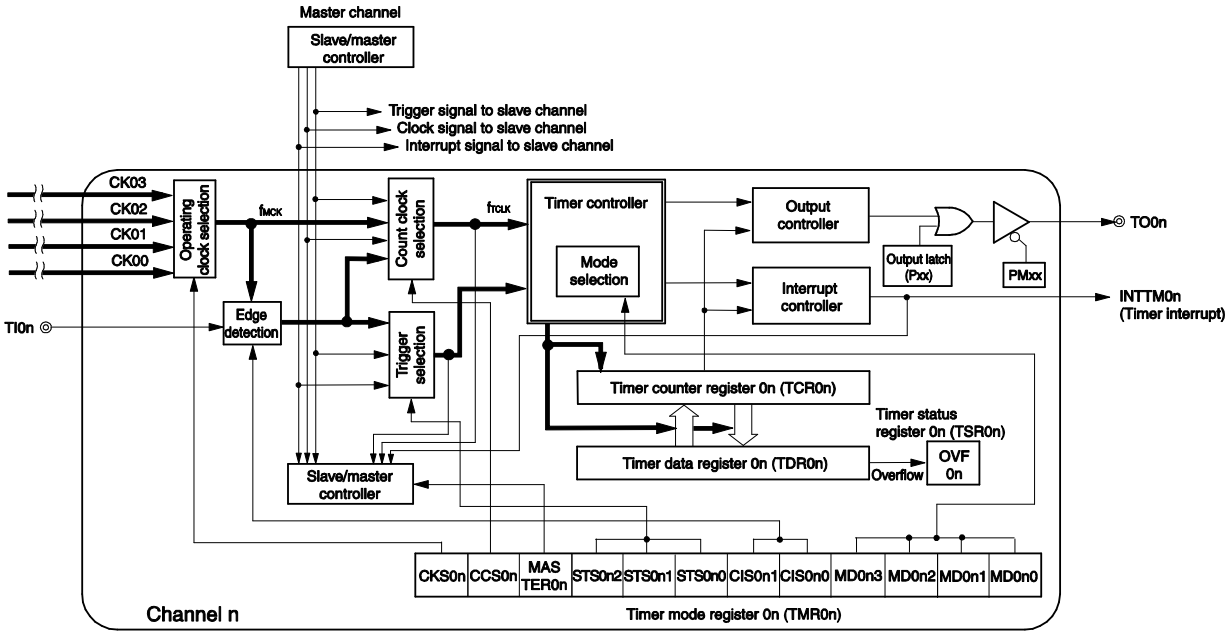

Remark n = 0, 2, 4, 6

Figure 6-5. Internal Block Diagram of Channel of Timer Array Unit 0

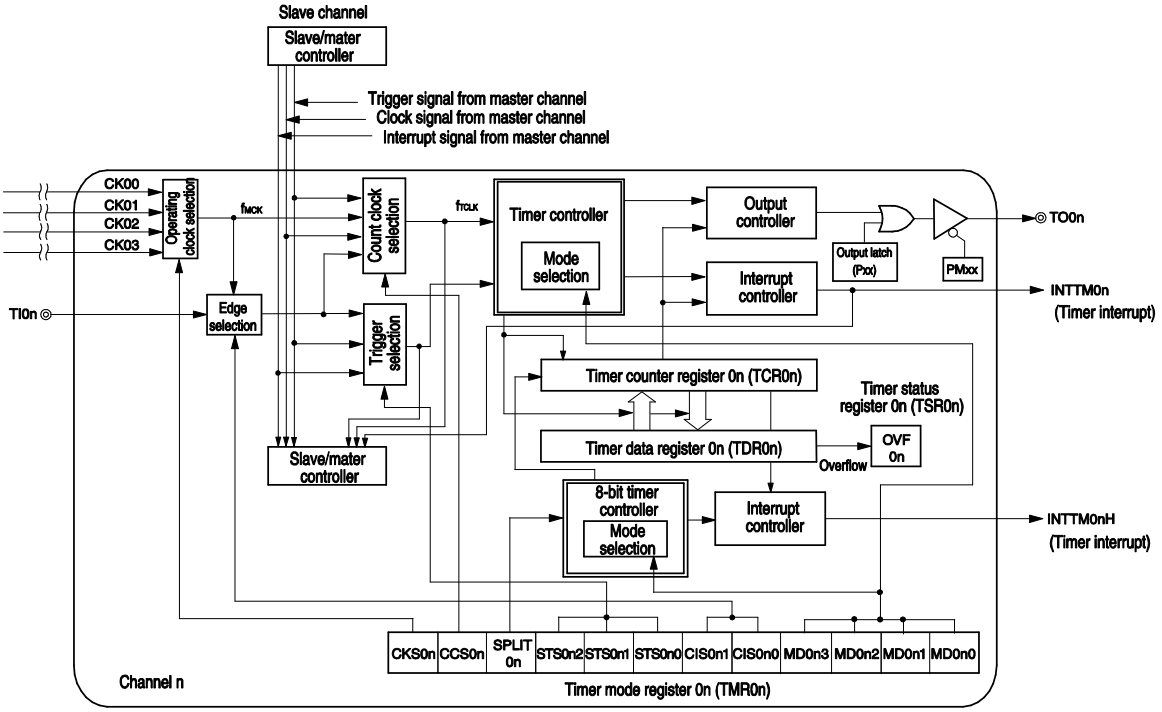

Remark n = 1, 3

Figure 6-6. Internal Block Diagram of Channel of Timer Array Unit 0

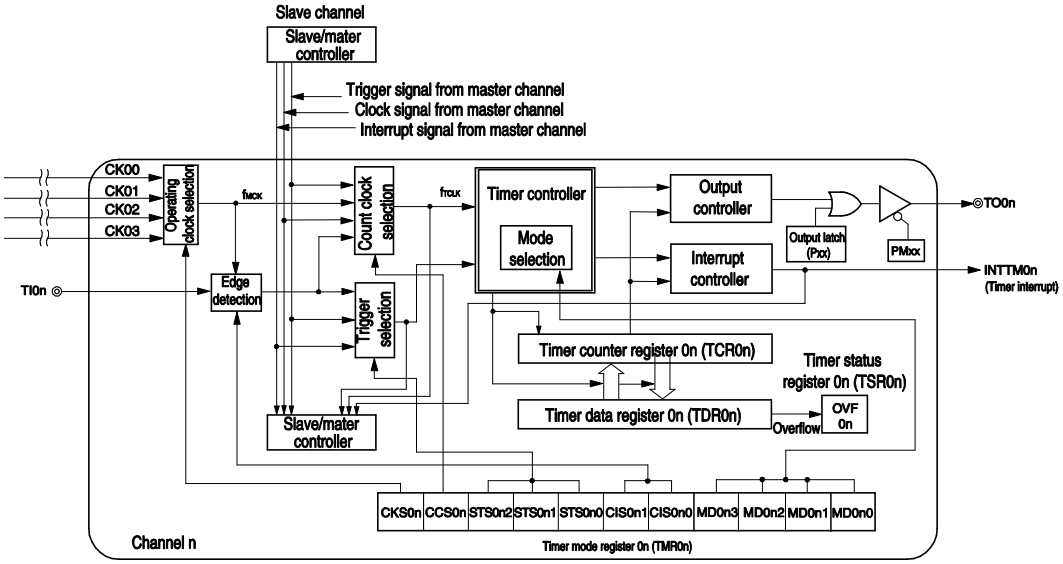

Remark n = 5, 7

6.2.1 Timer count register mn (TCRmn)

The TCRmn register is a 16-bit read-only register and is used to count clocks.

The value of this counter is incremented or decremented in synchronization with the rising edge of a count clock.

Whether the counter is incremented or decremented depends on the operation mode that is selected by the MDmn3 to MDmn0 bits of timer mode register mn (TMRmn) (refer to **6.3.3 Timer mode register mn (TMRmn)**).

Figure 6-7. Format of Timer Count Register mn (TCRmn)

Address: F0180H, F0181H (TCR00) to F018EH, F018FH (TCR07), After reset: FFFFH R
F01C0H, F01C1H (TCR10) to F01CEH, F01CFH (TCR17)

	F0181H (TCR00)								F0180H (TCR00)							
	15	14	13	12	11	10	9	8	7	6	5	4	3	2	1	0
TCRmn																

Remark m: Unit number (m = 0, 1), n: Channel number (n = 0 to 7)

The count value can be read by reading timer count register mn (TCRmn).

The count value is set to FFFFH in the following cases.

- When the reset signal is generated
- When the TAUmEN bit of peripheral enable register 0 (PER0) is cleared
- When counting of the slave channel has been completed in the PWM output mode
- When counting of the slave channel has been completed in the delay count mode
- When counting of the master/slave channel has been completed in the one-shot pulse output mode
- When counting of the slave channel has been completed in the multiple PWM output mode

The count value is cleared to 0000H in the following cases.

- When the start trigger is input in the capture mode
- When capturing has been completed in the capture mode

Caution The count value is not captured to timer data register mn (TDRmn) even when the TCRmn register is read.

The TCRmn register read value differs as follows according to operation mode changes and the operating status.

Table 6-3. Timer Count Register mn (TCRmn) Read Value in Various Operation Modes

Operation Mode	Count Mode	Timer count register mn (TCRmn) Read Value[Note]			
		Value if the operation mode was changed after releasing reset	Value if the operation mode was changed after count operation paused (TTmn = 1)	Value if the Operation was restarted after count operation paused (TTmn = 1)	Value when waiting for a start trigger after one count
Interval timer mode	Count down	FFFFH	Undefined	Stop value	–
Capture mode	Count up	0000H	Undefined	Stop value	–
Event counter mode	Count down	FFFFH	Undefined	Stop value	–
One-count mode	Count down	FFFFH	Undefined	Stop value	FFFFH
Capture & one-count mode	Count up	0000H	Undefined	Stop value	Capture value of TDRmn register + 1

Note This indicates the value read from the TCRmn register when channel n has stopped operating as a timer (TEmn = 0) and has been enabled to operate as a counter (TSmn = 1). The read value is held in the TCRmn register until the count operation starts.

Remark m: Unit number (m = 0, 1), n: Channel number (n = 0 to 7)

6.2.2 Timer data register mn (TDRmn)

This is a 16-bit register from which a capture function and a compare function can be selected.

The capture or compare function can be switched by selecting an operation mode by using the MDmn3 to MDmn0 bits of timer mode register mn (TMRmn).

When the TDRmn register is used for compare function, the value can be changed at any time.

This register can be read or written in 16-bit units.

<R> In addition, for the TDRm1 and TDRm3 registers, while in the 8-bit timer mode (when the SPLITm1, SPLITm3 bits of timer mode registers m1 and m3 (TMRm1, TMRm3) are 1), it is possible to rewrite the data in 8-bit units, with TDRm1H and TDRm3H used as the higher 8 bits, and TDRm1L and TDRm3L used as the lower 8 bits. However, reading is only possible in 16-bit units.

Reset signal generation clears this register to 0000H.

Figure 6-8. Format of Timer Data Register mn (TDRmn) (n = 0, 2, 4 to 7)

Address: FFF18H, FFF19H (TDR00), FFF64H, FFF65H (TDR02), FFF68H, FFF69H (TDR04) to FFF6EH, FFF6FH (TDR07)
FFF70H, FFF71H (TDR10), FFF74H, FFF75H (TDR12)
FFF78H, FFF79H (TDR14) to FFF7EH, FFF7FH (TDR17)

After reset: 0000H R/W

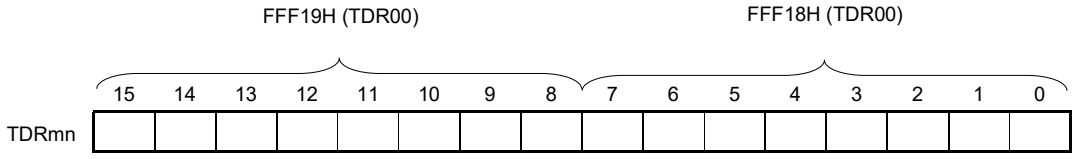

Figure 6-9. Format of Timer Data Register mn (TDRmn) (n = 1, 3)

Address: FFF1AH, FFF1BH (TDR01), FFF66H, FFF67H (TDR03), FFF72H, FFF73H (TDR11), FFF76H, FFF77H (TDR13)

After reset: 0000H R/W

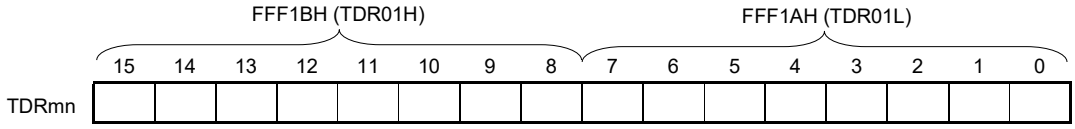

(i) When timer data register mn (TDRmn) is used as compare register

Counting down is started from the value set to the TDRmn register. When the count value reaches 0000H, an interrupt signal (INTTMmn) is generated. The TDRmn register holds its value until it is rewritten.

Caution The TDRmn register does not perform a capture operation even if a capture trigger is input, when it is set to the compare function.

(ii) When timer data register mn (TDRmn) is used as capture register

The count value of timer count register mn (TCRmn) is captured to the TDRmn register when the capture trigger is input.

A valid edge of the TImn pin can be selected as the capture trigger. This selection is made by timer mode register mn (TMRmn).

Remark m: Unit number (m = 0, 1), n: Channel number (n = 0 to 7)

6.3 Registers Controlling Timer Array Unit

Timer array unit is controlled by the following registers.

- Peripheral enable register 0 (PER0)
- Timer clock select register m (TPSm)
- Timer mode register mn (TMRmn)
- Timer status register mn (TSRmn)
- Timer channel enable status register m (TEm)
- Timer channel start register m (TSm)
- Timer channel stop register m (TTm)
- Timer input select register 0 (TIS0)
- Timer input select register 1 (TIS1)
- Timer input select register 2 (TIS2)
- Timer output enable register m (TOEm)
- Timer output register m (TOm)
- Timer output level register m (TOLm)
- Timer output mode register m (TOMm)
- PWM output delay control register 1 (PWMDLY1)
- PWM output delay control register 2 (PWMDLY2) Note 2
- Noise filter enable registers 1, 2 (NFEN1, NFEN2)
- Port mode register (PMxx) Note 1
- Port register (Pxx) Note 1

Notes 1. The port mode registers (PMxx) and port registers (Pxx) to be set differ depending on the product. For details, **see 6.3.16 Port mode registers 1, 3, 4, 7, 12 (PM1, PM3, PM4, PM7, PM12).**

2. Bit allocation differs depending on the number of pins.

Remarks 1. m: Unit number (m = 0, 1), n: Channel number (n = 0 to 7)

2. Unit 1 (m = 1) is not provided in the Group A products.

3. Channel numbers 7 to 4 (n = 7 to 4) of unit 1 are not provided in the Group B, C, and D products.

6.3.1 Peripheral enable register 0 (PER0)

This register is used to enable or disable supplying the clock to the peripheral hardware. Clock supply to a hardware macro that is not used is stopped in order to reduce the power consumption and noise.

When the timer array unit 0 is used, be sure to set bit 0 (TAU0EN) of this register to 1.

When the timer array unit 1 is used, be sure to set bit 1 (TAU1EN) of this register to 1.

Set the PER0 register by a 1-bit or 8-bit memory manipulation instruction.

Reset signal generation clears this register to 00H.

Figure 6-10. Format of Peripheral Enable Register 0 (PER0)

Address: F00F0H After reset: 00H R/W

Symbol	<7>	6	<5>	<4>	<3>	<2>	<1>	<0>
PER0	RTCEN	0	ADCEN	IICA0EN Notes1, 2	SAU1EN Note1	SAU0EN	TAU1EN Note1	TAU0EN

TAU1EN	Control of timer array unit 1 input clock
0	Stops supply of input clock. • SFR used by the timer array unit 1 cannot be written. • The timer array unit 1 is in the reset status.
1	Supplies input clock. • SFR used by the timer array unit 1 can be read/written.

<R>

TAU0EN	Control of timer array unit 0 input clock
0	Stops supply of input clock. • SFR used by the timer array unit 0 cannot be written. • The timer array unit 0 is in the reset status.
1	Supplies input clock. • SFR used by the timer array unit 0 can be read/written.

Notes 1. Not provided in RL78/F13 (LIN incorporated) products with 20, 30, 32, 48, or 64 pins and 16 Kbytes to 64 Kbytes of code flash memory.

2. Not provided in RL78/F13 (CAN and LIN incorporated) with 30 pins and RL78/F14 with 30 pins.

Cautions 1. When setting the timer array unit, be sure to set the TAUmEN bit to 1 first. If TAUmEN = 0, writing to a control register of timer array unit is ignored, and all read values are default values (except for the timer input select registers 0, 1, 2 (TIS0, TIS1, TIS2), noise filter enable registers 1, 2 (NFEN1, NFEN2), port mode registers 1, 3, 4, 7, 12 (PM1, PM3, PM4, PM7, PM12), port registers 1, 3, 4, 7, 12 (P1, P3, P4, P7, P12), and PWM output delay control registers 1, 2 (PWMDLY1, PWMDLY2)).

2. Be sure to clear the following bits to 0.

Bits 1, 3, 4, and 6 in RL78/F13 (LIN incorporated) products with 20, 30, 32, 48, or 64 pins and 16 Kbytes to 64 Kbytes of code flash memory

Bits 4 and 6 in the RL78/F13 (CAN and LIN incorporated) products with 30 pins, or in the RL78/F14 products with 30 pins

Bit 6 in the products other than above

6.3.2 Timer clock select register m (TPSm)

The TPSm register is a 16-bit register that is used to select the operation clocks that are supplied to each channel (CKm0, CKm1, CKm2, and CKm3) from the external prescaler. For unit 0 of the Group A, B, C, and D products, the clock frequency of CK00 is selected by using bits 3 to 0 of the TPS0 register, that of CK01 is selected by using bits 7 to 4, that of CK02 is selected by using bits 11 to 8, and that of CK03 is selected by using bits 15 to 12.

For unit 1 of the Group B, C, and D products, the clock frequency of CK10 is selected by using bits 3 to 0 of the TPS1 register, that of CK11 is selected by using bits 7 to 4, that of CK12 is selected by using bits 9 and 8, and that of CK13 is selected by using bits 13 and 12.

For the Group E products, the clock frequency of CKm0 is selected by using bits 3 to 0 of the TPSm register, that of CKm1 is selected by using bits 7 to 4, that of CKm2 is selected by using bits 11 to 8, and that of CKm3 is selected by using bits 15 to 12.

Rewriting of the TPSm register during timer operation is possible only in the following cases.

If the PRSm00 to PRSm03 bits can be rewritten (n = 0 to 7):
All channels for which CKm0 is selected as the operation clock (CKSmn1, CKSmn0 = 0, 0) are stopped (TEmn = 0).
If the PRSm10 to PRSm13 bits can be rewritten (n = 0 to 7):
All channels for which CKm1 is selected as the operation clock (CKSmn1, CKSmn0 = 1, 0) are stopped (TEmn = 0).
If the PRSm20 to PRSm23 bits can be rewritten (n = 0 to 7):
All channels for which CKm2 is selected as the operation clock (CKSmn1, CKSmn0 = 0, 1) are stopped (TEmn = 0).
If the PRSm30 to PRSm33 bits can be rewritten (n = 0 to 7):
All channels for which CKm3 is selected as the operation clock (CKSmn1, CKSmn0 = 1, 1) are stopped (TEmn = 0).

The TPSm register can be set by a 16-bit memory manipulation instruction.

Reset signal generation clears this register to 0000H.

Figure 6-11. Format of Timer Clock Select Register m (TPSm) (8-ch version)

Address: F01B6H, F01B7H (TPS0), F01F6H, F01F7H (TPS1) After reset: 0000H R/W

Symbol	15	14	13	12	11	10	9	8	7	6	5	4	3	2	1	0
TPSm	PRS m33	PRS m32	PRS m31	PRS m30	PRS m23	PRS m22	PRS m21	PRS m20	PRS m13	PRS m12	PRS m11	PRS m10	PRS m03	PRS m02	PRS m01	PRS m00

PRS mk3	PRS mk2	PRS mk1	PRS mk0	Selection of operation clock (CKmk) Note (k = 0 to 3)					
					f_{CLK} = 2 MHz	f_{CLK} = 5 MHz	f_{CLK} = 10 MHz	f_{CLK} = 20 MHz	f_{CLK} = 32 MHz
0	0	0	0	f_{CLK}	2 MHz	5 MHz	10 MHz	20 MHz	32 MHz
0	0	0	1	$f_{CLK}/2$	1 MHz	2.5 MHz	5 MHz	10 MHz	16 MHz
0	0	1	0	$f_{CLK}/2^2$	500 kHz	1.25 MHz	2.5 MHz	5 MHz	8 MHz
0	0	1	1	$f_{CLK}/2^3$	250 kHz	625 kHz	1.25 MHz	2.5 MHz	4 MHz
0	1	0	0	$f_{CLK}/2^4$	125 kHz	312.5 kHz	625 kHz	1.25 MHz	2 MHz
0	1	0	1	$f_{CLK}/2^5$	62.5 kHz	156.2 kHz	312.5 kHz	625 kHz	1 MHz
0	1	1	0	$f_{CLK}/2^6$	31.25 kHz	78.1 kHz	156.2 kHz	312.5 kHz	500 kHz
0	1	1	1	$f_{CLK}/2^7$	15.62 kHz	39.1 kHz	78.1 kHz	156.2 kHz	250 kHz
1	0	0	0	$f_{CLK}/2^8$	7.81 kHz	19.5 kHz	39.1 kHz	78.1 kHz	125 kHz
1	0	0	1	$f_{CLK}/2^9$	3.91 kHz	9.76 kHz	19.5 kHz	39.1 kHz	62.5 kHz
1	0	1	0	$f_{CLK}/2^{10}$	1.95 kHz	4.88 kHz	9.76 kHz	19.5 kHz	31.25 kHz
1	0	1	1	$f_{CLK}/2^{11}$	976 Hz	2.44 kHz	4.88 kHz	9.76 kHz	15.63 kHz
1	1	0	0	$f_{CLK}/2^{12}$	488 Hz	1.22 kHz	2.44 kHz	4.88 kHz	7.81 kHz
1	1	0	1	$f_{CLK}/2^{13}$	244 Hz	610 Hz	1.22 kHz	2.44 kHz	3.91 kHz
1	1	1	0	$f_{CLK}/2^{14}$	122 Hz	305 Hz	610 Hz	1.22 kHz	1.95 kHz
1	1	1	1	$f_{CLK}/2^{15}$	61 Hz	153 Hz	305 Hz	610 Hz	976 Hz

Note When changing the clock selected for f_{CLK} (by changing the system clock control register (CKC) value), stop timer array unit (TTm = 00FFH).

Cautions 1. TPS1 is not provided in the Group A products, because the timer array unit 1 is not provided. This format cannot be applied to unit 1 of the Group B, C, and D products (see the specifications of 4-channel version in Figure 6-12).

2. When selecting f_{CLK} (not divided) as the operation clock (CKmk) and setting TDRnm = 0000H (n = 0, 1; m = 0 to 7), set the interrupt mask flag to "interrupt processing disabled" (TMMKnm = 1).

Remarks 1. f_{CLK}: CPU/peripheral hardware clock frequency

2. The above clock becomes high level for one period of f_{CLK} from its rising edge (m = 0, 1). For details, see **6.5.1 Count clock (f_{TCLK})**.

Figure 6-12. Format of Timer Clock Select Register 1 (TPS1) (4-ch version)

Address: F01F6H, F01F7H After reset: 0000H R/W

Symbol	15	14	13	12	11	10	9	8	7	6	5	4	3	2	1	0
TPSm	0	0	PRS 131	PRS 130	0	0	PRS 121	PRS 120	PRS 113	PRS 112	PRS 111	PRS 110	PRS 103	PRS 102	PRS 101	PRS 100

PRS 121	PRS 120	Selection of operation clock (CK12) Note					
			f_{CLK} = 2 MHz	f_{CLK} = 5 MHz	f_{CLK} = 10 MHz	f_{CLK} = 20 MHz	f_{CLK} = 32 MHz
0	0	$f_{CLK}/2$	1 MHz	2.5 MHz	5 MHz	10 MHz	16 MHz
0	1	$f_{CLK}/2^2$	500 kHz	1.25 MHz	2.5 MHz	5 MHz	8 MHz
1	0	$f_{CLK}/2^4$	125 kHz	312.5 kHz	625 kHz	1.25 MHz	2 MHz
1	1	$f_{CLK}/2^6$	31.25 kHZ	78.1 kHz	156.2 kHz	312.5 kHz	500 kHZ

PRS 131	PRS 130	Selection of operation clock (CK13) Note					
			f_{CLK} = 2 MHz	f_{CLK} = 5 MHz	f_{CLK} = 10 MHz	f_{CLK} = 20 MHz	f_{CLK} = 32 MHz
0	0	$f_{CLK}/2^8$	7.81 kHz	19.5 kHz	39.1 kHz	78.1 kHz	125 kHz
0	1	$f_{CLK}/2^{10}$	1.95 kHz	4.88 kHz	9.76 kHz	19.5 kHz	31.25 kHz
1	0	$f_{CLK}/2^{12}$	488 Hz	1.22 kHz	2.44 kHz	4.88 kHz	7.81 kHz
1	1	$f_{CLK}/2^{14}$	122 HZ	305 Hz	610 Hz	1.22 kHz	1.95 kHZ

Note The above format is applied to the TPS1 of the Group B, C, and D products.
When changing the clock selected for f_{CLK} (by changing the system clock control register (CKC) value), stop timer array unit (TTm = 00FFH).
The timer array unit must also be stopped if the operating clock (f_{MCK}) specified by using the CKSmn0, and CKSmn1 bits or the valid edge of the signal input from the TImn pin is selected as the count clock (f_{TCLK}).

Cautions 1. This format cannot be applied to the Group A and E products and unit 0 of the Group B, C, and D products (see the specifications of 8-channel version in Figure 6-11).
2. When selecting f_{CLK} (not divided) as the operation clock (CKmk) and setting TDRnm = 0000H (n = 0, 1; m = 0 to 7), set the interrupt mask flag to "interrupt processing disabled" (TMMKnm = 1).

By using channels 1 and 3 in the 8-bit timer mode and specifying CKm2 or CKm3 as the operation clock, the interval times shown in Table 6-4 can be achieved by using the interval timer function.

Table 6-4. Interval Times Available for Operation Clock CKSm2 or CKSm3

Clock		Interval time (f_{CLK} = 32 MHz) Note			
		10 μs	100 μs	1 ms	10 ms
CKm2	$f_{CLK}/2$	√	–	–	–
	$f_{CLK}/2^2$	√	–	–	–
	$f_{CLK}/2^4$	√	√	–	–
	$f_{CLK}/2^6$	√	√	–	–
CKm3	$f_{CLK}/2^8$	–	√	√	–
	$f_{CLK}/2^{10}$	–	√	√	–
	$f_{CLK}/2^{12}$	–	–	√	√
	$f_{CLK}/2^{14}$	–	–	√	√

Note The margin is within 5 %.

Remarks 1. f_{CLK}: CPU/peripheral hardware clock frequency
2. For details of a signal of $f_{CLK}/2^i$ selected with the TPSm register, see **6.5.1 Count clock (f_{TCLK}).**

6.3.3 Timer mode register mn (TMRmn)

The TMRmn register sets an operation mode of channel n. This register is used to select the operation clock (f_{MCK}), select the count clock, select the master/slave, select the 16 or 8-bit timer (only for channels 1 and 3), specify the start trigger and capture trigger, select the valid edge of the timer input, and specify the operation mode (interval, capture, event counter, one-count, or capture and one-count).

Rewriting the TMRmn register is prohibited when the register is in operation (when TEmn = 1). However, bits 7 and 6 (CISmn1, CISmn0) can be rewritten even while the register is operating with some functions (when TEmn = 1) (for details, see **6.7 Independent Channel Operation Function of Timer Array Unit** and **6.8 Simultaneous Channel Operation Function of Timer Array Unit**.

Set the TMRmn register by a 16-bit memory manipulation instruction.

Reset signal generation clears this register to 0000H.

Caution The bits mounted depend on the channels in the bit 11 of TMRmn register.
TMRm2, TMRm4, TMRm6: MASTERmn bit (n = 2, 4, 6)
TMRm1, TMRm3: SPLITmn bit (n = 1, 3)
TMRm0, TMRm5, TMRm7: Fixed to 0 (n = 0, 5, 7)

Figure 6-13. Format of Timer Mode Register mn (TMRmn) (1/4)

Address: F0190H, F0191H (TMR00) to F019EH, F019FH (TMR07), F01D0H, F01D1H (TMR10) to F01DEH, F01DFH (TMR17) After reset: 0000H R/W

Symbol	15	14	13	12	11	10	9	8	7	6	5	4	3	2	1	0
TMRmn (n = 2, 4, 6)	CKS mn1	CKS mn0	0	CCS mn	MAST ERmn	STS mn2	STS mn1	STS mn0	CIS mn1	CIS mn0	0	0	MD mn3	MD mn2	MD mn1	MD mn0

Symbol	15	14	13	12	11	10	9	8	7	6	5	4	3	2	1	0
TMRmn (n = 1, 3)	CKS mn1	CKS mn0	0	CCS mn	SPLIT mn	STS mn2	STS mn1	STS mn0	CIS mn1	CIS mn0	0	0	MD mn3	MD mn2	MD mn1	MD mn0

Symbol	15	14	13	12	11	10	9	8	7	6	5	4	3	2	1	0
TMRmn (n = 0, 5, 7)	CKS mn1	CKS mn0	0	CCS mn	0 Note	STS mn2	STS mn1	STS mn0	CIS mn1	CIS mn0	0	0	MD mn3	MD mn2	MD mn1	MD mn0

CKS mn1	CKS mn0	Selection of operation clock (f_{MCK}) of channel n
0	0	Operation clock CKm0 set by timer clock select register m (TPSm)
0	1	Operation clock CKm2 set by timer clock select register m (TPSm)
1	0	Operation clock CKm1 set by timer clock select register m (TPSm)
1	1	Operation clock CKm3 set by timer clock select register m (TPSm)
Operation clock (f_{MCK}) is used by the edge detector. A count clock (f_{TCLK}) and a sampling clock are generated depending on the setting of the CCSmn bit.		

<R>

CCS mn	Selection of count clock (f_{TCLK}) of channel n
0	Operation clock (f_{MCK}) specified by the CKSmn0 and CKSmn1 bits
1	Valid edge of input signal input from the TImn pin When using unit 0: In channel 0 to 3, Valid edge of input signal selected by TIS0 In channel 4 to 7, Valid edge of input signal selected by TIS1 When using unit 1: In channel 6 and 7, Valid edge of input signal selected by TIS2
Count clock (f_{TCLK}) is used for the timer/counter, output controller, and interrupt controller.	

Note Bit 11 is a read-only bit and fixed to 0. Writing to this bit is ignored.

Cautions 1. Be sure to clear bits 13, 5, and 4 to "0".

2. The timer array unit must be stopped (TTm = 00FFH) if the clock selected for f_{CLK} is changed (by changing the value of the system clock control register (CKC)), even if the operating clock specified by using the CKSmn0 and CKSmn1 bits (f_{MCK}) or the valid edge of the signal input from the TImn pin is selected as the count clock (f_{TCLK}).

3. Be sure to clear CKS1n0 (n = 0, 2) to "0" in the Group B, C, and D products.

Remarks 1. m: Unit number (m = 0, 1), n: Channel number (n = 0 to 7)

2. TMR1n is not provided in the Group A products.
TMR17 to TMR14 are not provided in the Group B, C, and D products.

Figure 6-13. Format of Timer Mode Register mn (TMRmn) (2/4)

Address: F0190H, F0191H (TMR00) to F019EH, F019FH (TMR07), F01D0H, F01D1H (TMR10) to F01DEH, F01DFH (TMR17) After reset: 0000H R/W

Symbol	15	14	13	12	11	10	9	8	7	6	5	4	3	2	1	0
TMRmn (n = 2, 4, 6)	CKS mn1	CKS mn0	0	CCS mn	MASTERmn	STS mn2	STS mn1	STS mn0	CIS mn1	CIS mn0	0	0	MD mn3	MD mn2	MD mn1	MD mn0

Symbol	15	14	13	12	11	10	9	8	7	6	5	4	3	2	1	0
TMRmn (n = 1, 3)	CKS mn1	CKS mn0	0	CCS mn	SPLIT mn	STS mn2	STS mn1	STS mn0	CIS mn1	CIS mn0	0	0	MD mn3	MD mn2	MD mn1	MD mn0

Symbol	15	14	13	12	11	10	9	8	7	6	5	4	3	2	1	0
TMRmn (n = 0, 5, 7)	CKS mn1	CKS mn0	0	CCS mn	0 Note	STS mn2	STS mn1	STS mn0	CIS mn1	CIS mn0	0	0	MD mn3	MD mn2	MD mn1	MD mn0

(Bit 11 of TMRmn (n = 2, 4, 6))

MASTERmn	Selection between using channel n independently or simultaneously with another channel(as a slave or master)
0	Operates in independent channel operation function or as slave channel in simultaneous channel operation function.
1	Operates as master channel in simultaneous channel operation function.
Only channels 2, 4, and 6 can be set as a master channel (MASTERmn = 1). Channels 0, 5, and 7 are fixed to 0 (channel 0 always operates as master regardless of the bit setting, because it is the highest channel). Clear the MASTERmn bit to 0 for a channel that is used with the independent channel operation function.	

(Bit 11 of TMRmn (n = 1, 3))

SPLITmn	Selection of 8 or 16-bit timer operation for channels 1 and 3
0	Operates as 16-bit timer. (Operates in independent channel operation function or as slave channel in simultaneous channel operation function.)
1	Operates as 8-bit timer.

STS mn2	STS mn1	STS mn0	Setting of start trigger or capture trigger of channel n
0	0	0	Only software trigger start is valid (other trigger sources are unselected).
0	0	1	Valid edge of the TImn pin input is used as both the start trigger and capture trigger.
0	1	0	Both the edges of the TImn pin input are used as a start trigger and a capture trigger.
1	0	0	Interrupt signal of the master channel is used (when the channel is used as a slave channel with the simultaneous channel operation function).
Other than above			Setting prohibited

Note Bit 11 is a read-only bit and fixed to 0. Writing to this bit is ignored. In addition, channel 0 operates as master.

Remarks 1. m: Unit number (m = 0, 1), n: Channel number (n = 0 to 7)

2. TMR1n is not provided in the Group A products.
TMR17 to TMR14 are not provided in the Group B, C, and D products.

Figure 6-13. Format of Timer Mode Register mn (TMRmn) (3/4)

Address: F0190H, F0191H (TMR00) to F019EH, F019FH (TMR07), F01D0H, F01D1H (TMR10) to F01DEH, F01DFH (TMR17) After reset: 0000H R/W

Symbol	15	14	13	12	11	10	9	8	7	6	5	4	3	2	1	0
TMRmn (n = 2, 4, 6)	CKS mn1	CKS mn0	0	CCS mn	MASTERmn	STS mn2	STS mn1	STS mn0	CIS mn1	CIS mn0	0	0	MD mn3	MD mn2	MD mn1	MD mn0

Symbol	15	14	13	12	11	10	9	8	7	6	5	4	3	2	1	0
TMRmn (n = 1, 3)	CKS mn1	CKS mn0	0	CCS mn	SPLIT mn	STS mn2	STS mn1	STS mn0	CIS mn1	CIS mn0	0	0	MD mn3	MD mn2	MD mn1	MD mn0

Symbol	15	14	13	12	11	10	9	8	7	6	5	4	3	2	1	0
TMRmn (n = 0, 5, 7)	CKS mn1	CKS mn0	0	CCS mn	0 Note	STS mn2	STS mn1	STS mn0	CIS mn1	CIS mn0	0	0	MD mn3	MD mn2	MD mn1	MD mn0

CIS mn1	CIS mn0	Selection of TImn pin input valid edge
0	0	Falling edge
0	1	Rising edge
1	0	Both edges (when low-level width is measured) Start trigger: Falling edge, Capture trigger: Rising edge
1	1	Both edges (when high-level width is measured) Start trigger: Rising edge, Capture trigger: Falling edge
If both the edges are specified when the value of the STSmn2 to STSmn0 bits is other than 010B, set the CISmn1 to CISmn0 bits to 10B.		

Note Bit 11 is a read-only bit and fixed to 0. Writing to this bit is ignored.

Remarks **1.** m: Unit number (m = 0, 1), n: Channel number (n = 0 to 7)

2. TMR1n is not provided in the Group A products.
TMR17 to TMR14 are not provided in the Group B, C, and D products.

Figure 6-13. Format of Timer Mode Register mn (TMRmn) (4/4)

Address: F0190H, F0191H (TMR00) to F019EH, F019FH (TMR07), F01D0H, F01D1H (TMR10) to F01DEH, F01DFH (TMR17) After reset: 0000H R/W

Symbol	15	14	13	12	11	10	9	8	7	6	5	4	3	2	1	0
TMRmn (n = 2, 4, 6)	CKS mn1	CKS mn0	0	CCS mn	MASTERmn	STS mn2	STS mn1	STS mn0	CIS mn1	CIS mn0	0	0	MD mn3	MD mn2	MD mn1	MD mn0

Symbol	15	14	13	12	11	10	9	8	7	6	5	4	3	2	1	0
TMRmn (n = 1, 3)	CKS mn1	CKS mn0	0	CCS mn	SPLIT mn	STS mn2	STS mn1	STS mn0	CIS mn1	CIS mn0	0	0	MD mn3	MD mn2	MD mn1	MD mn0

Symbol	15	14	13	12	11	10	9	8	7	6	5	4	3	2	1	0
TMRmn (n = 0, 5, 7)	CKS mn1	CKS mn0	0	CCS mn	0 Note 1	STS mn2	STS mn1	STS mn0	CIS mn1	CIS mn0	0	0	MD mn3	MD mn2	MD mn1	MD mn0

MD mn3	MD mn2	MD mn1	Operation mode of channel n	Corresponding function	Count operation of TCR
0	0	0	Interval timer mode	Interval timer / Square wave output / Divider function / PWM output (master)	Counting down
0	1	0	Capture mode	Input pulse interval measurement	Counting up
0	1	1	Event counter mode	External event counter	Counting down
1	0	0	One-count mode	Delay counter / One-shot pulse output / PWM output (slave)	Counting down
1	1	0	Capture & one-count mode	Measurement of high-/low-level width of input signal	Counting up
Other than above			Setting prohibited		
Each operation mode varies depending on the MDmn0 bit (see table below).					

<R>

Operation mode (Value set by the MDmn3 to MDmn1 bits (see table above))	MD mn0	Setting of starting counting and interrupt
• Interval timer mode (0, 0, 0)	0	Timer interrupt is not generated when counting is started (timer output does not change, either).
• Capture mode (0, 1, 0)	1	Timer interrupt is generated when counting is started (timer output also changes).
• Event counter mode (0, 1, 1)	0	Timer interrupt is not generated when counting is started (timer output does not change, either).
• One-count mode Note 2 (1, 0, 0)	0	Start trigger is invalid during counting operation. At that time, interrupt is not generated, either.
	1	Start trigger is valid during counting operation Note 3. At that time, interrupt is not generated, either.
• Capture & one-count mode (1, 1, 0)	0	Timer interrupt is not generated when counting is started (timer output does not change, either). Start trigger is invalid during counting operation. At that time interrupt is not generated, either.
Other than above		Setting prohibited

Notes 1. Bit 11 is a read-only bit and fixed to 0. Writing to this bit is ignored.

2. In one-count mode, interrupt output (INTTMmn) when starting a count operation and TOmn output are not controlled.

3. If the start trigger (TSmn = 1) is issued during operation, the counter is initialized and recounting is started (no interrupt request is generated).

Remarks 1. m: Unit number (m = 0, 1), n: Channel number (n = 0 to 7)

2. TMR1n is not provided in the Group A products.

3. TMR17 to TMR14 are not provided in the Group B, C, and D products.

6.3.4 Timer status register mn (TSRmn)

The TSRmn register indicates the overflow status of the counter of channel n.

The TSRmn register is valid only in the capture mode (MDmn3 to MDmn1 = 010B) and capture & one-count mode (MDmn3 to MDmn1 = 110B). See **Table 6-5** for the operation of the OVF bit in each operation mode and set/clear conditions.

The TSRmn register can be read by a 16-bit memory manipulation instruction.

<R> The lower 8 bits of the TSRmn register can be read with an 8-bit memory manipulation instruction with TSRmnL.

Reset signal generation clears this register to 0000H.

Figure 6-14. Format of Timer Status Register mn (TSRmn)

Address: F01A0H, F01A1H (TSR00) to F01AEH, F01AFH (TSR07), F01E0H, F01E1H (TSR10) to F01EEH, F01EFH (TSR17) After reset: 0000H R

Symbol	15	14	13	12	11	10	9	8	7	6	5	4	3	2	1	0
TSRmn	0	0	0	0	0	0	0	0	0	0	0	0	0	0	0	OVF

OVF	Counter overflow status of channel n
0	Overflow does not occur.
1	Overflow occurs.
When OVF = 1, this flag is cleared (OVF = 0) when the next value is captured without overflow.	

Remarks 1. m: Unit number (m = 0, 1), n: Channel number (n = 0 to 7)

2. TSR1n is not provided in the Group A products.

3. TSR17 to TSR14 are not provided in the Group B, C, and D products.

Table 6-5. OVF Bit Operation and Set/Clear Conditions in Each Operation Mode

Timer operation mode	OVF bit	Set/clear conditions
• Capture mode • Capture & one-count mode	Clear	When no overflow has occurred upon capturing
	Set	When an overflow has occurred upon capturing
• Interval timer mode • Event counter mode • One-count mode	Clear	–
	Set	(Use prohibited)

Remark The OVF bit does not change immediately after the counter has overflowed, but changes upon the subsequent capture.

6.3.5 Timer channel enable status register m (TEm)

The TEm register is used to enable or stop the timer operation of each channel.

Each bit of the TEm register corresponds to each bit of the timer channel start register m (TSm) and the timer channel stop register m (TTm). When a bit of the TSm register is set to 1, the corresponding bit of this register is set to 1. When a bit of the TTm register is set to 1, the corresponding bit of this register is cleared to 0.

The TEm register can be read by a 16-bit memory manipulation instruction.

<R> The lower 8 bits of the TEm register can be read with a 1-bit or 8-bit memory manipulation instruction with TEmL.

Reset signal generation clears this register to 0000H.

Figure 6-15. Format of Timer Channel Enable Status Register m (TEm)

Address: F01B0H, F01B1H (TE0), F01F0H, F01F1H (TE1) After reset: 0000H R

Symbol	15	14	13	12	11	10	9	8	7	6	5	4	3	2	1	0
TEm	0	0	0	0	TEHm3	0	TEHm1	0	TEm7	TEm6	TEm5	TEm4	TEm3	TEm2	TEm1	TEm0

TEHm3	Indication of whether operation of the higher 8-bit timer is enabled or stopped when channel 3 is in the 8-bit timer mode
0	Operation is stopped.
1	Operation is enabled.

TEHm1	Indication of whether operation of the higher 8-bit timer is enabled or stopped when channel 1 is in the 8-bit timer mode
0	Operation is stopped.
1	Operation is enabled.

TEmn	Indication of operation enable/stop status of channel n
0	Operation is stopped.
1	Operation is enabled.
This bit displays whether operation of the lower 8-bit timer for TEm1 and TEm3 is enabled or stopped when channel 1 or 3 is in the 8-bit timer mode.	

Cautions 1. Be sure to clear bits 15 to 12, 10, and 8 to "0".

2. Be sure to clear TE1n (n = 7 to 4) to “0” in the Group B, C, and D products.

Remarks 1. m: Unit number (m = 0, 1), n: Channel number (n = 0 to 7)

2. TE1n is not provided in the Group A products.

TE17 to TE14 are not provided in the Group B, C, and D products.

6.3.6 Timer channel start register m (TSm)

The TSm register is a trigger register that is used to initialize timer count register mn (TCRmn) and start the counting operation of each channel.

When a bit of this register is set to 1, the corresponding bit of timer channel enable status register m (TEm) is set to 1. The TSmn, TSHm1, TSHm3 bits are immediately cleared when operation is enabled (TEmn, TEHm1, TEHm3 = 1), because they are trigger bits.

The TSm register can be set by a 16-bit memory manipulation instruction.

Set the lower 8 bits of the TSm register with a 1-bit or 8-bit memory manipulation instruction with TSmL.

Reset signal generation clears this register to 0000H.

Figure 6-16. Format of Timer Channel Start Register m (TSm)

Address: F01B2H, F01B3H (TS0), F01F2H, F01F3H (TS1) After reset: 0000H R/W

Symbol	15	14	13	12	11	10	9	8	7	6	5	4	3	2	1	0
TSm	0	0	0	0	TSHm3	0	TSHm1	0	TSm7	TSm6	TSm5	TSm4	TSm3	TSm2	TSm1	TSm0

TSHm3	Trigger to enable operation (start operation) of the higher 8-bit timer when channel 3 is in the 8-bit timer mode
0	No trigger operation
1	The TEHm3 bit is set to 1 and the count operation becomes enabled. The TCRm3 register count operation start in the interval timer mode in the count operation enabled state (see **Table 6-6** in **6.5.2 Start timing of counter**).

TSHm1	Trigger to enable operation (start operation) of the higher 8-bit timer when channel 1 is in the 8-bit timer mode
0	No trigger operation
1	The TEHm1 bit is set to 1 and the count operation becomes enabled. The TCRm1 register count operation start in the interval timer mode in the count operation enabled state (see **Table 6-6** in **6.5.2 Start timing of counter**).

TSmn	Operation enable (start) trigger of channel n
0	No trigger operation
1	The TEmn bit is set to 1 and the count operation becomes enabled. The TCRmn register count operation start in the count operation enabled state varies depending on each operation mode (see **Table 6-6** in **6.5.2 Start timing of counter**). This bit is the trigger to enable operation (start operation) of the lower 8-bit timer for TSm1 and TSm3 when channel 1 or 3 is in the 8-bit timer mode.

Cautions 1. Be sure to clear bits 15 to 12, 10, and 8 to "0".

2. Be sure to clear TS1n (n = 7 to 4) to "0" in the Group B, C, and D products.

3. When switching from a function that does not use TImn pin input to one that does, the following wait period is required from when timer mode register mn (TMRmn) is set until the TSmn (TSHm1, TSHm3) bit is set to 1.

When the TImn pin noise filter is enabled (TNFENmn = 1): Four cycles of the operation clock (f_{MCK})

When the TImn pin noise filter is disabled (TNFENmn = 0): Two cycles of the operation clock (f_{MCK})

Remarks 1. When the TSm register is read, 0 is always read.

2. m: Unit number (m = 0, 1), n: Channel number (n = 0 to 7)

3. TS1n is not provided in the Group A products.

TS17 to TS14 are not provided in the Group B, C, and D products.

6.3.7 Timer channel stop register m (TTm)

The TTm register is a trigger register that is used to stop the counting operation of each channel.

When a bit of this register is set to 1, the corresponding bit of timer channel enable status register m (TEm) is cleared to 0. The TTmn, TTHm1, TTHm3 bits are immediately cleared when operation is stopped (TEmn, TTHm1, TTHm3 = 0), because they are trigger bits.

The TTm register can be set by a 16-bit memory manipulation instruction.

Set the lower 8 bits of the TTm register with a 1-bit or 8-bit memory manipulation instruction with TTmL.

Reset signal generation clears this register to 0000H.

Figure 6-17. Format of Timer Channel Stop Register m (TTm)

Address: F01B4H, F01B5H (TT0), F01F4H, F01F5H (TT1) After reset: 0000H R/W

Symbol	15	14	13	12	11	10	9	8	7	6	5	4	3	2	1	0
TTm	0	0	0	0	TTHm3	0	TTHm1	0	TTm7	TTm6	TTm5	TTm4	TTm3	TTm2	TTm1	TTm0

TTHm3	Trigger to stop operation of the higher 8-bit timer when channel 3 is in the 8-bit timer mode
0	No trigger operation
1	TEHm3 bit is cleared to 0 and the count operation is stopped.

<R>

TTHm1	Trigger to stop operation of the higher 8-bit timer when channel 1 is in the 8-bit timer mode
0	No trigger operation
1	TEHm1 bit is cleared to 0 and the count operation is stopped.

<R>

TTmn	Operation stop trigger of channel n
0	No trigger operation
1	TEmn bit is cleared to 0 and the count operation is stopped. This bit is the trigger to stop operation of the lower 8-bit timer for TTm1 and TTm3 when channel 1 or 3 is in the 8-bit timer mode.

<R>

Cautions 1. Be sure to clear bits 15 to 12, 10, and 8 of the TTm register to "0".

2. Be sure to clear TT1n (n = 7 to 4) to "0" in the Group B, C, and D products.

Remarks 1. When the TTm register is read, 0 is always read.

2. m: Unit number (m = 0, 1),n: Channel number (n = 0 to 7)

3. TT1n is not provided in the Group A products.

TT17 to TT14 are not provided in the Group B, C, and D products.

6.3.8 Timer input select register 0 (TIS0)

The TIS0 register selects an input source of the timer array unit 0.

Set the TIS0 register by an 8-bit memory manipulation instruction.

Reset signal generation clears this register to 00H.

Figure 6-18. Format of Timer Input Select Register 0 (TIS0)

Address: F0074H After reset: 00H R/W

Symbol	7	6	5	4	3	2	1	0
TIS0	TIS07 Note 1	TIS06 Note 1	0	TIS04 Note 2	0	TIS02	TIS01	TIS00

TIS07 Note 1	Selection of timer input used with channel 3 of timer array unit 0
0	Input signal of timer input pin (TI03)
1	Event input signal from ELC Note 3

TIS06 Note 1	Selection of timer input used with channel 2 of timer array unit 0
0	Input signal of timer input pin (TI02)
1	Event input signal from ELC Note 3

TIS04 Note 2	Selection of timer input used with channel 0 of timer array unit 0
0	Input signal of timer input pin (TI00)
1	Event input signal from ELC Note 3

TIS02	TIS01	TIS00	Selection of timer input used with channel 1 of timer array unit 0
0	0	0	Input signal of timer input pin (TI01)
0	0	1	Event input signal from ELC Note 3
0	1	0	Input signal of timer input pin (TI01)
0	1	1	
1	0	0	Low-speed on-chip oscillator clock (f_{IL})
1	0	1	Sub/low-speed on-chip oscillator select clock (f_{SL})
Other than above			Setting prohibited

Notes 1. Provided only in products of group E. Write "0" when writing to the timer input select register 0 (TIS0) of the other products.

2. Provided only in products of groups D and E. Write "0" when writing to the timer input select register 0 (TIS0) of the other products.

3. Provided only in products of groups D and E. Do not set in the other products.

Cautions 1. When selecting an event input signal from the ELC using timer input select register 0 (TIS0), select f_{CLK} using timer clock select register 0 (TPS0).

2. Do not change the select bit of the timer input while inputting data to the TImn pin (m = 0, 1; n = 0 to 7).

3. Each of the high-level and low-level widths of the timer input to be selected should be (1/f_{MCK} + 10 ns) or more. So, the TIS02 bit cannot be set to 1 when f_{SL} is selected as f_{CLK} (the CSS bit in the CKC register is set to 1).

6.3.9 Timer input select register 1 (TIS1)

The TIS1 register selects an input source of the timer array unit 0.

The TIS17 and TIS16 bits in the TIS1 register are used in conjunction with the serial array unit to implement the LIN-bus communication operation in channel 7. When the TIS17 and TIS16 bits are set to 1 and 0 respectively, the input signal on the serial data input pin (RxD0) is selected as the timer input.

Set the TIS17 and TIS16 bits at the same time as setting the ISC0 bit in the ISC register (input switch control register).

Set the TIS1 register by an 8-bit memory manipulation instruction.

Reset signal generation clears this register to 00H.

Figure 6-19. Format of Timer Input Select Register 1 (TIS1)

Address: F0075H After reset: 00H R/W

Symbol	7	6	5	4	3	2	1	0
TIS1	TIS17	TIS16	0	TIS14	0	TIS12	0	TIS10

TIS17	TIS16	Selection of timer input used with channel 7 of timer array unit 0
0	0	Input signal of timer input pin (TI07)
0	1	RTC1HZ output signal
1	0	RxD0 pin (detection of the wake-up signal and measurement of the low-level width of the sync break field and the pulse width of the sync field)
1	1	Setting prohibited

TIS14	Selection of timer input used with channel 6 of timer array unit 0
0	Input signal of timer input pin (TI06)
1	RTC1HZ output signal

TIS12	Selection of timer input used with channel 5 of timer array unit 0
0	Input signal of timer input pin (TI05)
1	Input signal of timer input pin (TI03)

TIS10	Selection of timer input used with channel 4 of timer array unit 0
0	Input signal of timer input pin (TI04)
1	Input signal of timer input pin (TI03)

Cautions 1. Do not change the select bit of the timer input while inputting data to the TImn pin (m = 0, 1; n = 0 to 7).

2. When selecting the RTC1HZ output signal for the clock source of the timer input used in channels 7 and 6 in the TAU, set the TIS17, TIS16, and TIS14 bits to 0, 1, and 1, respectively, and select the RTC1HZ output signal for the timer input of channels 7 and 6.

Remark Set the TIS17 and TIS16 bits to 1 and 0 respectively and select the input signal of the RxD0 pin before using the LIN-bus communication.

6.3.10 Timer input select register 2 (TIS2)

The TIS2 register selects an input source of the timer array unit 1.

Set the TIS2 register by an 8-bit memory manipulation instruction.

Reset signal generation clears this register to 00H.

This function is valid only for the Group E products.

Figure 6-20. Format of Timer Input Select Register 2 (TIS2)

Address: F007AH After reset: 00H R/W

Symbol	7	6	5	4	3	2	1	0
TIS2	0	0	0	0	TIS23	TIS22	0	0

TIS22	Selection of timer input used with channel 6 of timer array unit 1
0	Input signal of timer input pin (TI16)
1	RTC1HZ output signal

TIS23	Selection of timer input used with channel 7 of timer array unit 1
0	Input signal of timer input pin (TI17)
1	RTC1HZ output signal

Cautions 1. Do not change the select bit of the timer input while inputting data to the TImn pin (m = 0, 1; n = 0 to 7).

2. When selecting the RTC1HZ output signal for the clock source of the timer input used in channels 7 and 6 in the TAU, set the TIS23 and TIS22 bits to 1 and select the RTC1HZ output signal for the timer input of channels 7 and 6.

6.3.11 Timer output enable register m (TOEm)

The TOEm register is used to enable or disable timer output of each channel.

Channel n for which timer output has been enabled becomes unable to rewrite the value of the TOmn bit of timer output register m (TOm) described later by software, and the value reflecting the setting of the timer output function through the count operation is output from the timer output pin (TOmn).

The TOEm register can be set by a 16-bit memory manipulation instruction.

Set the lower 8 bits of the TOEm register with a 1-bit or 8-bit memory manipulation instruction with TOEmL.

Reset signal generation clears this register to 0000H.

Figure 6-21. Format of Timer Output Enable Register m (TOEm)

Address: F01BAH, F01BBH (TOE0), F01FAH, F01FBH (TOE1) After reset: 0000H R/W

Symbol	15	14	13	12	11	10	9	8	7	6	5	4	3	2	1	0
TOEm	0	0	0	0	0	0	0	0	TOE m7	TOE m6	TOE m5	TOE m4	TOE m3	TOE m2	TOE m1	TOE m0

TOE mn	Timer output enable/disable of channel n
0	Timer output is disabled. Timer operation is not applied to the TOmn bit and the output is fixed. Writing to the TOmn bit is enabled.
1	Timer output is enabled. Timer operation is applied to the TOmn bit and an output waveform is generated. Writing to the TOmn bit is ignored.

Caution Be sure to clear bits 15 to 8 to “0”. (unit 1, 0: Group E products, unit 0: Group A products) Be sure to clear bits 15 to 8 of unit 0 and bits 15 to 4 of unit 1 to "0". (Group B, C, and D products)

Remarks 1. m: Unit number (m = 0, 1), n: Channel number (n = 0 to 7)

2. TOE1n is not provided in the Group A products.
TOE17 to TOE14 are not provided in the Group B, C, and D products.

6.3.12 Timer output register m (TOm)

The TOm register is a buffer register of timer output of each channel.

The value of each bit in this register is output from the timer output pin (TOmn) of each channel.

<R> The TOmn bit of this register can be rewritten by software only when timer output is disabled (TOEmn = 0). When timer output is enabled (TOEmn = 1), rewriting this register by software is ignored, and the value is changed only by the timer operation.

Due to pin arrangement, when using the pins shared by TImn and TOmn as port pins, set the corresponding TOmn bit to “0”.

The TOm register can be set by a 16-bit memory manipulation instruction.

Set the lower 8 bits of the TOm register with an 8-bit memory manipulation instruction with TOmL.

Reset signal generation clears this register to 0000H.

Figure 6-22. Format of Timer Output Register m (TOm)

Address: F01B8H, F01B9H (TO0), F01F8H, F01F9H (TO1) After reset: 0000H R/W

Symbol	15	14	13	12	11	10	9	8	7	6	5	4	3	2	1	0
TOm	0	0	0	0	0	0	0	0	TOm7	TOm6	TOm5	TOm4	TOm3	TOm2	TOm1	TOm0

TOmn	Timer output of channel n
0	Timer output value is “0”.
1	Timer output value is “1”.

Caution Be sure to clear bits 15 to 8 to “0”. (unit 1, 0: Group E products, unit 0: Group A products) Be sure to clear bits 15 to 8 of unit 0 and bits 15 to 4 of unit 1 to "0". (Group B, C, and D products)

Remarks 1. m: Unit number (m = 0, 1), n: Channel number (n = 0 to 7)

2. TO1n is not provided in the Group A products.
TO17 to TO14 are not provided in the Group B, C, and D products.

6.3.13 Timer output level register m (TOLm)

The TOLm register is a register that controls the timer output level of each channel.

The setting of the inverted output of channel n by this register is reflected at the timing of set or reset of the timer output signal while the timer output is enabled (TOEmn = 1) in the Slave channel output mode (TOMmn = 1). In the master channel output mode (TOMmn = 0), this register setting is invalid.

The TOLm register can be set by a 16-bit memory manipulation instruction.

Set the lower 8 bits of the TOLm register with an 8-bit memory manipulation instruction with TOLmL.

Reset signal generation clears this register to 0000H.

Figure 6-23. Format of Timer Output Level Register m (TOLm)

Address: F01BCH, F01BDH (TOL0), F01FCH, F01FDH (TOL1) After reset: 0000H R/W

Symbol	15	14	13	12	11	10	9	8	7	6	5	4	3	2	1	0
TOLm	0	0	0	0	0	0	0	0	TOL m7	TOL m6	TOL m5	TOL m4	TOL m3	TOL m2	TOL m1	0

TOL mn	Control of timer output level of channel n
0	Non-inverted output (active-high)
1	Inverted output (active-low)

Caution Be sure to clear bits 15 to 8 and 0 to “0”. (unit 1, 0: Group E products, unit 0: Group A products) Be sure to clear bits 15 to 8 and 0 of unit 0 and bits 15 to 4 and 0 of unit 1 to "0". (Group B, C, and D products)

Remarks 1. If the value of this register is rewritten during timer operation, the timer output logic is inverted when the timer output signal changes next, instead of immediately after the register value is rewritten.

2. m: Unit number (m = 0, 1), n: Channel number (n = 0 to 7)

3. TOL1n is not provided in the Group A products.
TOL17 to TOL14 are not provided in the Group B, C, and D products.

6.3.14 Timer output mode register m (TOMm)

The TOMm register is used to control the timer output mode of each channel.

When a channel is used for the independent channel operation function, set the corresponding bit of the channel to be used to 0.

When a channel is used for the simultaneous channel operation function (PWM output, one-shot pulse output, or multiple PWM output), set the corresponding bit of the master channel to 0 and the corresponding bit of the slave channel to 1.

The setting of each channel n by this register is reflected at the timing when the timer output signal is set or reset while the timer output is enabled (TOEmn = 1).

The TOMm register can be set by a 16-bit memory manipulation instruction.

Set the lower 8 bits of the TOMm register with an 8-bit memory manipulation instruction with TOMmL.

Reset signal generation clears this register to 0000H.

Figure 6-24. Format of Timer Output Mode Register m (TOMm)

Address: F01BEH, F01BFH (TOM0), F01FEH, F01FFH (TOM1) After reset: 0000H R/W

Symbol	15	14	13	12	11	10	9	8	7	6	5	4	3	2	1	0
TOMm	0	0	0	0	0	0	0	0	TOM m7	TOM m6	TOM m5	TOM m4	TOM m3	TOM m2	TOM m1	0

<R>

TOM mn	Control of timer output mode of channel n
0	Master channel output mode (to produce toggle output by timer interrupt request signal (INTTMmn))
1	Slave channel output mode (output is set by the timer interrupt request signal (INTTMmn) of the master channel, and reset by the timer interrupt request signal (INTTMmp) of the slave channel)

Caution Be sure to clear bits 15 to 8 and 0 to “0”. (unit 1, 0: Group E products, unit 0: Group A products) Be sure to clear bits 15 to 8 and 0 of unit 0 and bits 15 to 4 and 0 of unit 1 to "0". (Group B, C, and D products)

Remarks 1. m: Unit number (m = 0, 1)
n: Channel number
n = 0 to 7 (n = 0, 2, 4, 6 for master channel)
p: Slave channel number
n < p ≤ 7 (For details of the relation between the master channel and slave channel, refer to **6.4.1 Basic rules of simultaneous channel operation function**.)

2. TOM1n is not provided in the Group A products.
TOM17 to TOM14 are not provided in the Group B, C, and D products.

6.3.15 Noise filter enable registers 1, 2 (NFEN1, NFEN2)

The NFEN1, NFEN2 registers is used to set whether the noise filter can be used for the timer input signal to each channel.

Enable the noise filter by setting the corresponding bits to 1 on the pins in need of noise removal.

When the noise filter is ON, match detection and synchronization of the 2 clocks is performed with the CPU/peripheral hardware clock (f_{MCK}). When the noise filter is OFF, only synchronization is performed with the CPU/peripheral hardware clock (f_{MCK}) **Note**.

Set the NFEN1 and NFEN2 registers by a 1-bit or 8-bit memory manipulation instruction.

Reset signal generation clears this register to 00H.

Note For details, see **6.5.1 (2) When valid edge of input signal via the TImn pin is selected (CCSmn = 1)** and **6.5.2 Start timing of counter**.

<R> **Figure 6-25. Format of Noise Filter Enable Register 1, 2 (NFEN1, NFEN2) (1/2)**

Address: F0071H After reset: 00H R/W

Symbol	7	6	5	4	3	2	1	0
NFEN1	TNFEN07	TNFEN06	TNFEN05	TNFEN04	TNFEN03	TNFEN02	TNFEN01	TNFEN00

TNFEN07	Enable/disable using noise filter of TI07 pin input signal
0	Noise filter OFF
1	Noise filter ON

TNFEN06	Enable/disable using noise filter of TI06 pin input signal
0	Noise filter OFF
1	Noise filter ON

TNFEN05	Enable/disable using noise filter of TI05 pin input signal
0	Noise filter OFF
1	Noise filter ON

TNFEN04	Enable/disable using noise filter of TI04 pin input signal
0	Noise filter OFF
1	Noise filter ON

TNFEN03	Enable/disable using noise filter of TI03 pin input signal
0	Noise filter OFF
1	Noise filter ON

TNFEN02	Enable/disable using noise filter of TI02 pin input signal
0	Noise filter OFF
1	Noise filter ON

TNFEN01	Enable/disable using noise filter of TI01 pin input signal
0	Noise filter OFF
1	Noise filter ON

TNFEN00	Enable/disable using noise filter of TI00 pin input signal
0	Noise filter OFF
1	Noise filter ON

Caution The pin to be used can be changed by setting the TIS17 and TIS16 bits in the timer input select register 1 (TIS1).
When TIS17, TIS16 = 0, 0: The use of the noise filter of the TI07 pin can be enabled or disabled.
When TIS17, TIS16 = 1, 0: The use of the noise filter of the RxD0 pin can be enabled or disabled.

Remark The presence or absence of timer I/O pins of channel 0 to 7 depends on the product. See **Table 6-2 Timer I/O Pins provided in Each Product** for details.

<R> **Figure 6-25. Format of Noise Filter Enable Register 1, 2 (NFEN1, NFEN2) (2/2)**

Address: F0072H After reset: 00H R/W

Symbol	7	6	5	4	3	2	1	0
NFEN2	TNFEN17	TNFEN16	TNFEN15	TNFEN14	TNFEN13	TNFEN12	TNFEN11	TNFEN10

TNFEN17	Enable/disable using noise filter of TI17 pin input signal
0	Noise filter OFF
1	Noise filter ON

TNFEN16	Enable/disable using noise filter of TI16 pin input signal
0	Noise filter OFF
1	Noise filter ON

TNFEN15	Enable/disable using noise filter of TI15 pin input signal
0	Noise filter OFF
1	Noise filter ON

TNFEN14	Enable/disable using noise filter of TI14 pin input signal
0	Noise filter OFF
1	Noise filter ON

TNFEN13	Enable/disable using noise filter of TI13 pin input signal
0	Noise filter OFF
1	Noise filter ON

TNFEN12	Enable/disable using noise filter of TI12 pin input signal
0	Noise filter OFF
1	Noise filter ON

TNFEN11	Enable/disable using noise filter of TI11 pin input signal
0	Noise filter OFF
1	Noise filter ON

TNFEN10	Enable/disable using noise filter of TI00 pin input signal
0	Noise filter OFF
1	Noise filter ON

Remarks 1. The presence or absence of timer I/O pins of channel 0 to 7 depends on the product. See **Table 6-2 Timer I/O Pins provided in Each Product** for details.

2. NFEN2 is not provided in the Group A products.
Bits 7 to 4 are not provided in the Group B, C, and D products.

6.3.16 Port mode registers 1, 3, 4, 7, 12 (PM1, PM3, PM4, PM7, PM12)

These registers set input/output of ports 1, 3, 4, 7, 12 in 1-bit units.

The presence or absence of timer I/O pins depends on the product. When using the timer array unit, set the following port mode registers according to the product used.

Group A and B products: PM1, PM3, PM12
Group C and D products: PM1, PM3, PM4, PM12
Group E products: PM1, PM3, PM4, PM7, PM12

When using the ports (such as P17/TO00/TI00 and P16/TO2/TI02) to be shared with the timer output pin for timer output, set the port mode register (PMxx) bit and port register (Pxx) bit corresponding to each port to “0”.

Example: When using P16/TO02/TI02 for timer output
Set the PM16 bit of port mode register 1 to 0.
Set the P16 bit of port register 1 to 0.

When using the ports (such as P17/TO00/TI00 and P16/TO2/TI02) to be shared with the timer output pin for timer input, set the port mode register (PMxx) bit corresponding to each port to 1. At this time, the port register (Pxx) bit may be 0 or 1.

Example: When using P16/TO02/TI02 for timer input
Set the PM16 bit of port mode register 1 to 1.
P16 bit of port register may be 0 or 1.

Set the PM1, PM3, PM4, PM7, and PM12 registers by a 1-bit or 8-bit memory manipulation instruction.
Reset signal generation sets these registers to FFH.

Figure 6-26. Format of Port Mode Registers 1, 3, 4, 7, 12 (PM1, PM3, PM4, PM7, PM12) (100-pin products)

Address: FFF21H After reset: FFH R/W

Symbol	7	6	5	4	3	2	1	0
PM1	PM17	PM16	PM15	PM14	PM13	PM12	PM11	PM10

Address: FFF23H After reset: FFH R/W

Symbol	7	6	5	4	3	2	1	0
PM3	1	1	1	PM34	PM33	PM32	PM31	PM30

Address: FFF24H After reset: FFH R/W

Symbol	7	6	5	4	3	2	1	0
PM4	PM47	PM46	PM45	PM44	PM43	PM42	PM41	PM40

Address: FFF27H After reset: FFH R/W

Symbol	7	6	5	4	3	2	1	0
PM7	PM77	PM76	PM75	PM74	PM73	PM72	PM71	PM70

Address: FFF2CH After reset: FFH R/W

Symbol	7	6	5	4	3	2	1	0
PM12	PM127	PM126	PM125	1	1	1	1	PM120

PMmn	Pmn pin I/O mode selection (m = 1, 3, 4, 7, 12; n = 0 to 7)
0	Output mode (output buffer on)
1	Input mode (output buffer off)

Remark The figure shown above presents the format of port mode registers 1, 3, 4, 7, and 12 of the 100-pin products. The format of the port mode register of other products, see **CHAPTER 4 PORT FUNCTIONS**.

6.3.17 PWM output delay control register 1 (PWMDLY1)

This register controls output delay of PWM output signal output from the TO0n pin.

Set the PWMDLY1 register by a 16-bit memory manipulation instruction.

Reset signal generation clears this register to 0000H.

Address: F022BH After reset: 00H R/W

Symbol	15	14	13	12	11	10	9	8
PWMDLY1	TO071	TO070	TO061	TO060	TO051	TO050	TO041	TO040

Address: F022AH After reset: 00H R/W

Symbol	7	6	5	4	3	2	1	0
PWMDLY1	TO031[Note]	TO030[Note]	TO021[Note]	TO020[Note]	TO011	TO010	0	0

TO0n1	TO0n0	PWM output delay control of timer array unit 0 TO0n
0	0	No delay
0	1	Delayed by one cycle of the CPU/peripheral hardware clock (f_{CLK}).
1	0	Delayed by two cycles of the CPU/peripheral hardware clock (f_{CLK}).
1	1	Delayed by three cycles of the CPU/peripheral hardware clock (f_{CLK}).

Note If this register is set for a delay, this affects PWM output of TO0n, but doesn't affect the operation of the timer output signal to peripheral functions.

Remark n: Channel number (n = 1 to 7)

Cautions 1. Set this register before outputting a PWM output signal (do not change the setting during operation).

2. Set this register with a 16-bit memory manipulation instruction. Do not set this register with a 1-bit or 8-bit memory manipulation instruction.

3. If this register is not used for PWM output, it should be cleared to 0. This is because the timer output is delayed.

4. When setting this register after the PWM output is stopped, wait for four cycles of the CPU/peripheral hardware clock (f_{CLK}) before the setting.

5. Even if this register is set for a delay, this doesn't affect the operation of other pin functions multiplexed on the same pin as the TO0n pin function (n = 1 to 7).

6.3.18 PWM output delay control register 2 (PWMDLY2)

This register controls output delay of PWM output signal output from the TO1n pin.

Set the PWMDLY2 register by a 16-bit memory manipulation instruction.

Reset signal generation clears this register to 0000H.

Address: F022DH After reset: 00H R/W

Symbol	15	14	13	12	11	10	9	8
PWMDLY2	TO171	TO170	TO161	TO160	TO151	TO150	TO141	TO140

Address: F022CH After reset: 00H R/W

Symbol	7	6	5	4	3	2	1	0
PWMDLY2	TO131	TO130	TO121	TO120	TO111	TO110	0	0

TO1n1	TO1n0	PWM output delay control of timer array unit 1 TO1n
0	0	No delay
0	1	Delayed by one cycle of the CPU/peripheral hardware clock (f_{CLK}).
1	0	Delayed by two cycles of the CPU/peripheral hardware clock (f_{CLK}).
1	1	Delayed by three cycles of the CPU/peripheral hardware clock (f_{CLK}).

Remarks 1. n: Channel number (n = 1 to 7)

2. Bits 15 to 0 are not provided in the Group A products.
Bits 15 to 8 are not provided in the Group B, C, and D products.

Cautions 1. Set this register before outputting a PWM output signal (do not change the setting during operation).

2. Set this register with a 16-bit memory manipulation instruction. Do not set this register with a 1-bit or 8-bit memory manipulation instruction.

3. If this register is not used for PWM output, it should be cleared to 0. This is because the timer output is delayed.

4. When setting this register after the PWM output is stopped, wait for four cycles of the CPU/peripheral hardware clock (f_{CLK}) before the setting.

5. Even if this register is set for a delay, this doesn't affect the operation of other pin functions multiplexed on the same pin as the TO1n pin function (n = 1 to 7).

6.4 Basic Rules of Timer Array Unit

6.4.1 Basic rules of simultaneous channel operation function

When simultaneously using multiple channels, namely, a combination of a master channel (a reference timer mainly counting the cycle) and slave channels (timers operating according to the master channel), the following rules apply.

(1) Only an even channel (channel 0, 2, 4, 6) can be set as a master channel.
(2) Any channel, except channel 0, can be set as a slave channel.
(3) The slave channel must be lower than the master channel.
Example: If channel 2 is set as a master channel, channel 3 or those that follow (channels 3, 4, 5, …) can be set as a slave channel.

(4) Two or more slave channels can be set for one master channel.
(5) When two or more master channels are to be used, slave channels with a master channel between them may not be set.
Example: If channels 0 and 4 are set as master channels, channels 1 to 3 can be set as the slave channel of master channel 0. Channels 5 to 7 cannot be set as the slave channel of master channel 0.

(6) The operating clock for a slave channel in combination with a master channel must be the same as that of the master channel. The CKSmn0, CKSmn1 bits (bit 15, 14 of timer mode register mn (TMRmn)) of the slave channel that operates in combination with the master channel must be the same value as that of the master channel.
(7) A master channel can transmit INTTMmn (interrupt), start software trigger, and count clock to the lower channels.
(8) A slave channel can use INTTMmn (interrupt), a start software trigger, or the count clock of the master channel as a source clock, but cannot transmit its own INTTMmn (interrupt), start software trigger, or count clock to channels with lower channel numbers.
(9) A master channel cannot use INTTMmn (interrupt), a start software trigger, or the count clock from the other higher master channel as a source clock.
(10) To simultaneously start channels that operate in combination, the channel start trigger bit (TSmn) of the channels in combination must be set at the same time.
(11) During the counting operation, a TSmn bit of a master channel or TSmn bits of all channels which are operating simultaneously can be set. It cannot be applied to TSmn bits of slave channels alone.
(12) To stop the channels in combination simultaneously, the channel stop trigger bit (TTmn) of the channels in combination must be set at the same time.
<R> (13) CKm2/CKm3 cannot be selected while channels are operating simultaneously, because the operating clocks of master channels and slave channels have to be synchronized.
(14) Timer mode register m0 (TMRm0) has no master bit (it is fixed as "0"). However, as channel 0 is the highest channel, it can be used as a master channel during simultaneous operation.

The rules of the simultaneous channel operation function are applied in a channel group (a master channel and slave channels forming one simultaneous channel operation function).

If two or more channel groups that do not operate in combination are specified, the basic rules described above do not apply to the channel groups.

Remarks 1. m: Unit number (m = 0, 1), n: Channel number (n = 0 to 7)
2. Unit 1 is not provided in the Group A products.
Channels 7 to 4 of unit 1 are not provided in the Group B, C, and D products.

Example 1

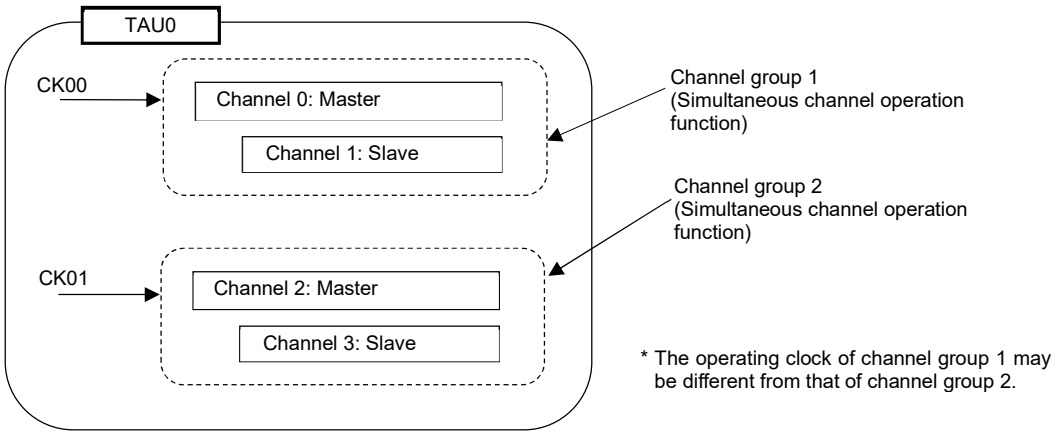

Example 2

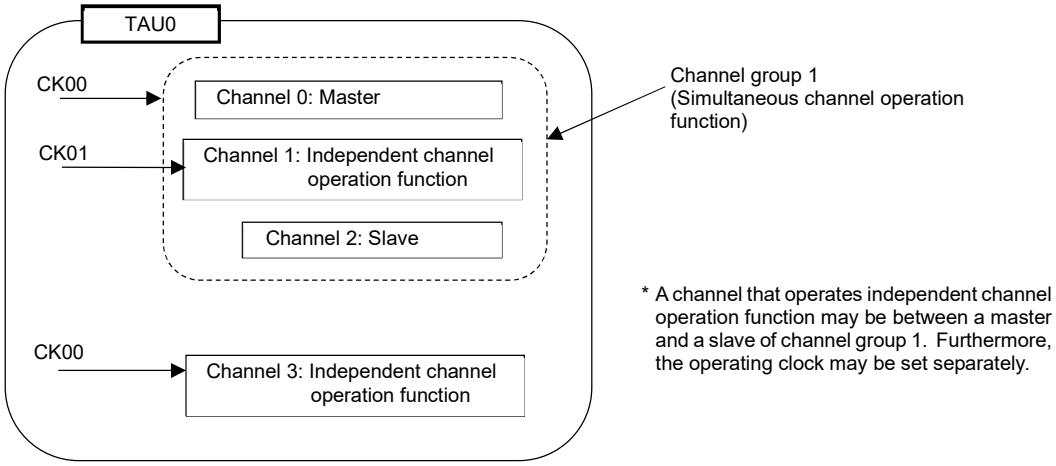

6.4.2 Basic rules of 8-bit timer operation function (channels 1 and 3 only)

The 8-bit timer operation function makes it possible to use a 16-bit timer channel in a configuration consisting of two 8-bit timer channels.

This function can only be used for channels 1 and 3, and there are several rules for using it.

The basic rules for this function are as follows:

(1) The 8-bit timer operation function applies only to channels 1 and 3.

<R> (2) When using 8-bit timers, set the SPLITmn bit of timer mode register mn (TMRmn) to 1.

(3) The higher 8 bits can be operated as the interval timer function.

(4) At the start of operation, the higher 8 bits output INTTMm1H/INTTMm3H (an interrupt) (which is the same operation performed when MDmn0 is set to 1).

(5) The operation clock of the higher 8 bits is selected according to the CKSmn1 and CKSmn0 bits of the lower-bit TMRmn register.

(6) For the higher 8 bits, the TSHm1/TSHm3 bit is manipulated to start channel operation and the TTHm1/TTHm3 bit is manipulated to stop channel operation. The channel status can be checked using the TEHm1/TEHm3 bit.

(7) The lower 8 bits operate according to the TMRmn register settings. The following three functions support operation of the lower 8 bits:

- Interval timer function
- External event counter function
- Delay count function

(8) For the lower 8 bits, the TSm1/TSm3 bit is manipulated to start channel operation and the TTm1/TTm3 bit is manipulated to stop channel operation. The channel status can be checked using the TEm1/TEm3 bit.

(9) During 16-bit operation, manipulating the TSHm1, TSHm3, TTHm1, and TTHm3 bits is invalid. The TSm1, TSm3, TTm1, and TTm3 bits are manipulated to operate channels 1 and 3. The TEHm3 and TEHm1 bits are not changed.

(10) For the 8-bit timer function, the simultaneous operation functions (one-shot pulse, PWM, and multiple PWM) cannot be used.

Remarks 1. m: Unit number (m = 0, 1), n: Channel number (n = 1, 3)

2. Unit 1 is not provided in the Group A products.

6.5 Operation Timing of Counter

6.5.1 Count clock (f_{TCLK})

The count clock (f_{TCLK}) of the timer array unit can be selected between following by CCSmn bit of timer mode register mn (TMRmn).

- Operation clock (f_{MCK}) specified by the CKSmn0 and CKSmn1 bits
- Valid edge of input signal input from the TImn pin

Because the timer array unit is designed to operate in synchronization with f_{CLK}, the timings of the count clock (f_{TCLK}) are shown below.

(1) When operation clock (f_{MCK}) specified by the CKSmn0 and CKSmn1 bits is selected (CCSmn = 0)

The count clock (f_{TCLK}) is between f_{CLK} to $f_{CLK}/2^{15}$ by setting of timer clock select register m (TPSm). When a divided f_{CLK} is selected, however, the clock is a signal which becomes high level for one period of f_{CLK} from its rising edge. When f_{CLK} is selected, the clock is fixed high.

Counting of timer count register mn (TCRmn) delayed by one period of f_{CLK} from rising edge of the count clock, because of synchronization with f_{CLK}. But, this is described as “counting at rising edge of the count clock”, as a matter of convenience.

Figure 6-27. Timing of f_{CLK} and count clock (f_{TCLK}) (When CCSmn = 0)

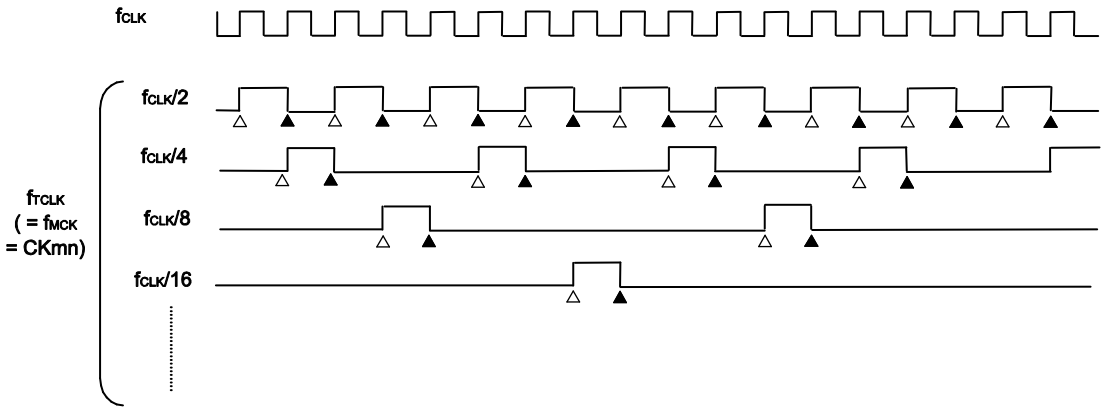

Remarks 1. △ : Rising edge of the count clock
▲ : Synchronization, increment/decrement of counter
2. f_{CLK}: CPU/peripheral hardware clock

(2) When valid edge of input signal via the TImn pin is selected (CCSmn = 1)

The count clock (f_{TCLK}) becomes the signal that detects valid edge of input signal via the TImn pin and synchronizes next rising f_{MCK}. The count clock (f_{TCLK}) is delayed for 1 to 2 period of f_{MCK} from the input signal via the TImn pin (when a noise filter is used, the delay becomes 3 to 4 clock).

Counting of timer count register mn (TCRmn) delayed by one period of f_{CLK} from rising edge of the count clock, because of synchronization with f_{CLK}. But, this is described as "counting at valid edge of input signal via the TImn pin", as a matter of convenience.

Figure 6-28. Timing of count clock (f_{TCLK}) (When CCSmn = 1, noise filter unused)

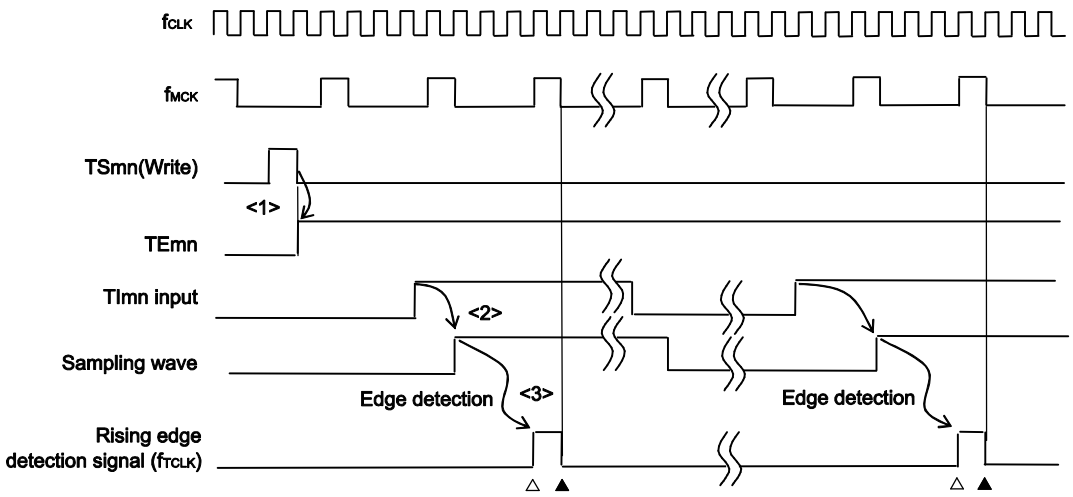

<1> Setting TSmn bit to 1 enables the timer to be started and to become wait state for valid edge of input signal via the TImn pin.

<2> The rise of input signal via the TImn pin is sampled by f_{MCK}.

<3> The edge is detected by the rising of the sampled signal and the detection signal (count clock) is output.

Remarks 1. △: Rising edge of the count clock
▲: Synchronization, increment/decrement of counter

2. f_{CLK}: CPU/peripheral hardware clock
f_{MCK}: Operation clock of channel n

3. The waveform of the input signal via TImn pin of the input pulse interval measurement, the measurement of high/low width of input signal, and the delay counter, and the one-shot pulse output are the same as that shown in Figure 6-28.

6.5.2 Start timing of counter

Timer count register mn (TCRmn) becomes enabled to operation by setting of TSmn bit of timer channel start register m (TSm).

Operations from count operation enabled state to timer count Register mn (TCRmn) count start is shown in Table 6-6.

Table 6-6. Operations from Count Operation Enabled State to Timer count Register mn (TCRmn) Count Start

Timer operation mode	Operation when TSmn = 1 is set
• Interval timer mode	No operation is carried out from start trigger detection (TSmn=1) until count clock generation. The first count clock loads the value of the TDRmn register to the TCRmn register and the subsequent count clock performs count down operation (see **6.5.3 (1) Start timing in interval timer mode**).
• Event counter mode	Writing 1 to the TSmn bit loads the value of the TDRmn register to the TCRmn register. The subsequent count clock performs count down operation. The external trigger detection selected by the STSmn2 to STSmn0 bits in the TMRmn register does not start count operation (see **6.5.3 (2) Start timing in event counter mode**).
• Capture mode	No operation is carried out from start trigger detection until count clock generation. The first count clock loads 0000H to the TCRmn register and the subsequent count clock performs count up operation (see **6.5.3 (3) Start timing in capture mode**).
• One-count mode	The waiting-for-start-trigger state is entered by writing 1 to the TSmn bit while the timer is stopped (TEmn = 0). No operation is carried out from start trigger detection until count clock generation. The first count clock loads the value of the TDRmn register to the TCRmn register and the subsequent count clock performs count down operation (see **6.5.3 (4) Start timing in one-count mode**).
• Capture & one-count mode	The waiting-for-start-trigger state is entered by writing 1 to the TSmn bit while the timer is stopped (TEmn = 0). No operation is carried out from start trigger detection until count clock generation. The first count clock loads 0000H to the TCRmn register and the subsequent count clock performs count up operation (see **6.5.3 (5) Start timing in capture & one-count mode (when high-level width is measured)**).

6.5.3 Operation of counter

Here, the counter operation in each mode is explained.

<R> **(1) Operation of interval timer mode**

<1> Operation is enabled (TEmn = 1) by writing 1 to the TSmn bit. Timer count register mn (TCRmn) holds the initial value until count clock generation.

<2> A start trigger is generated at the first count clock after operation is enabled.

<3> When the MDmn0 bit is set to 1, INTTMmn is generated by the start trigger.

<4> By the first count clock after the operation enable, the value of timer data register mn (TDRmn) is loaded to the TCRmn register and counting starts in the interval timer mode.

<5> When the TCRmn register counts down and its count value is 0000H, INTTMmn is generated and the value of timer data register mn (TDRmn) is loaded to the TCRmn register and counting keeps on.

<R> **Figure 6-29. Operation Timing (In Interval Timer Mode)**

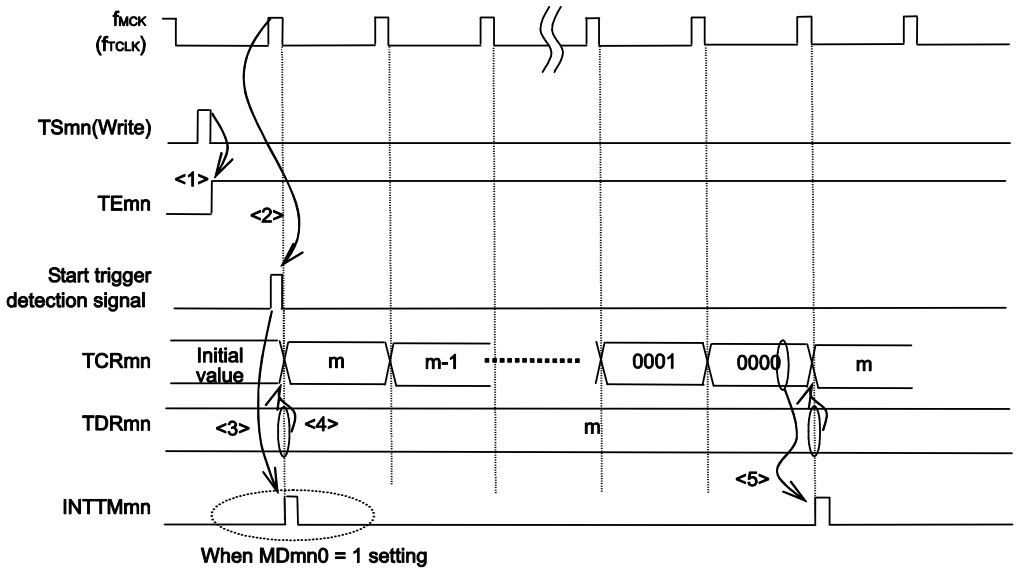

Caution In the first cycle operation of count clock after writing the TSmn bit, an error at a maximum of one clock is generated since count start delays until count clock has been generated. When the information on count start timing is necessary, an interrupt can be generated at count start by setting MDmn0 = 1.

Remark f_{MCK}, the start trigger detection signal, and INTTMmn become active between one clock in synchronization with f_{CLK}.

<R> **(2) Operation of event counter mode**

<1> Timer count register mn (TCRmn) holds its initial value while operation is stopped (TEmn = 0).

<2> Operation is enabled (TEmn = 1) by writing 1 to the TSmn bit.

<3> As soon as 1 has been written to the TSmn bit and 1 has been set to the TEmn bit, the value of timer data register mn (TDRmn) is loaded to the TCRmn register to start counting.

<4> After that, the TCRmn register value is counted down according to the count clock of the valid edge of the TImn input .

<R> **Figure 6-30. Operation Timing (In Event Counter Mode)**

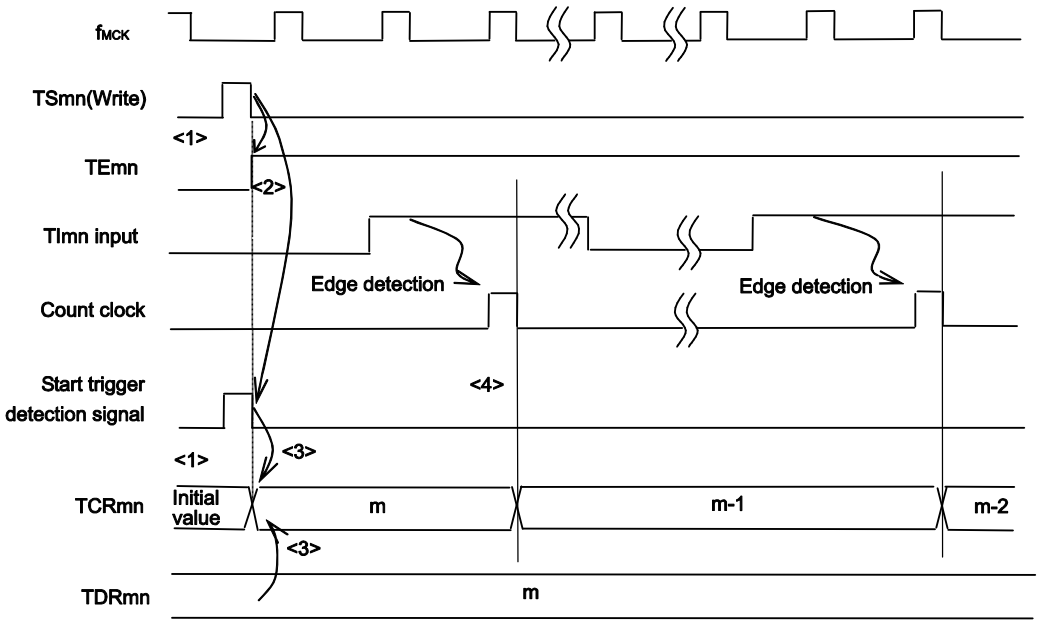

Remark The timing is shown in Figure 6-30 indicates while the noise filter is not used. By making the noise filter on-state, the edge detection becomes 2 f_{MCK} cycles (it sums up to 3 to 4 cycles) later than the normal cycle of TImn input.

<R> **(3) Operation of capture mode (input pulse interval measurement)**

<1> Operation is enabled (TEmn = 1) by writing 1 to the TSmn bit.
<2> Timer count register mn (TCRmn) holds the initial value until count clock generation.
<3> A start trigger is generated at the first count clock after operation is enabled. And the value of 0000H is loaded to the TCRmn register and counting starts in the capture mode. (When the MDmn0 bit is set to 1, INTTMmn is generated by the start trigger.)
<4> On detection of the valid edge of the TImn input, the value of the TCRmn register is captured to timer data register mn (TDRmn) and INTTMmn is generated. However, this capture value is no meaning. The TCRmn register keeps on counting from 0000H.
<5> On next detection of the valid edge of the TImn input, the value of the TCRmn register is captured to timer data register mn (TDRmn) and INTTMmn is generated.

Figure 6-31. Operation Timing (In Capture Mode : Input Pulse Interval Measurement)

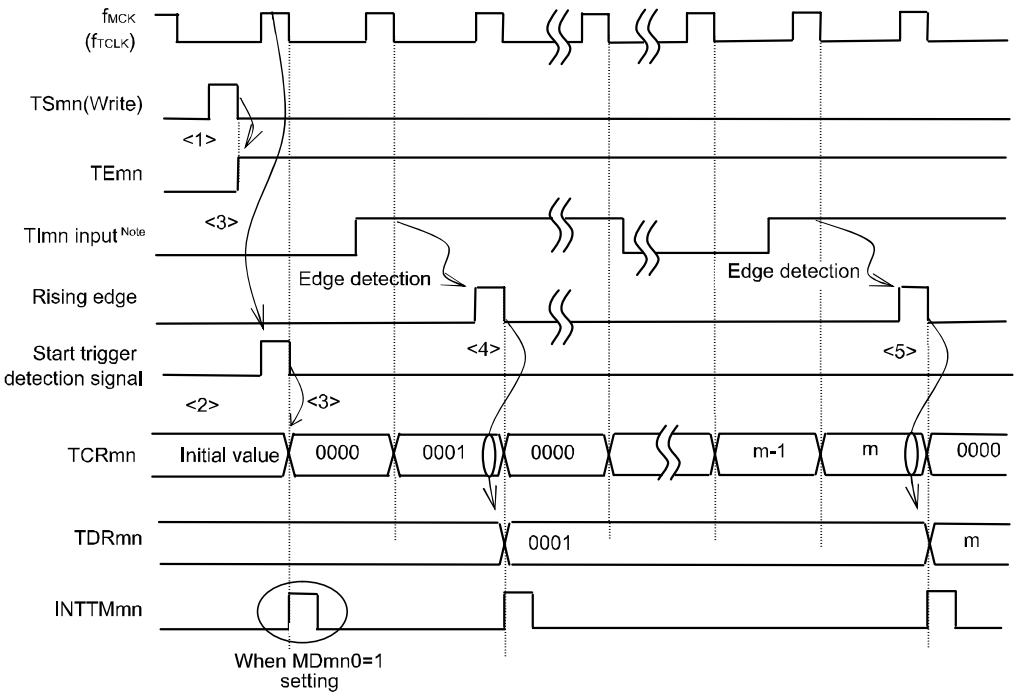

Note If a clock has been input to TImn (the trigger exists) when capturing starts, counting starts when a trigger is detected, even if no edge is detected. Therefore, the first captured value (<4>) does not determine a pulse interval (in the above figure, 0001 just indicates two clock cycles but does not determine the pulse interval) and so the user can ignore it.

Caution In the first cycle operation of count clock after writing the TSmn bit, an error at a maximum of one clock is generated since count start delays until count clock has been generated. When the information on count start timing is necessary, an interrupt can be generated at count start by setting MDmn0 = 1.

Remark The timing is shown in Figure 6-31 indicates while the noise filter is not used. By making the noise filter on-state, the edge detection becomes 2 f_{MCK} cycles (it sums up to 3 to 4 cycles) later than the normal cycle of TImn input.

<R> **(4) Operation of one-count mode**

<1> Operation is enabled (TEmn = 1) by writing 1 to the TSmn bit.
<2> Timer count register mn (TCRmn) holds the initial value until start trigger generation.
<3> Rising edge of the TImn input is detected.
<4> On start trigger detection, the value of timer data register mn (TDRmn) is loaded to the TCRmn register and count starts.
<5> When the TCRmn register counts down and its count value is 0000H, INTTMmn is generated and the value of the TCRmn register becomes FFFFH and counting stops
.

<R> **Figure 6-32. Operation Timing (In One-count Mode)**

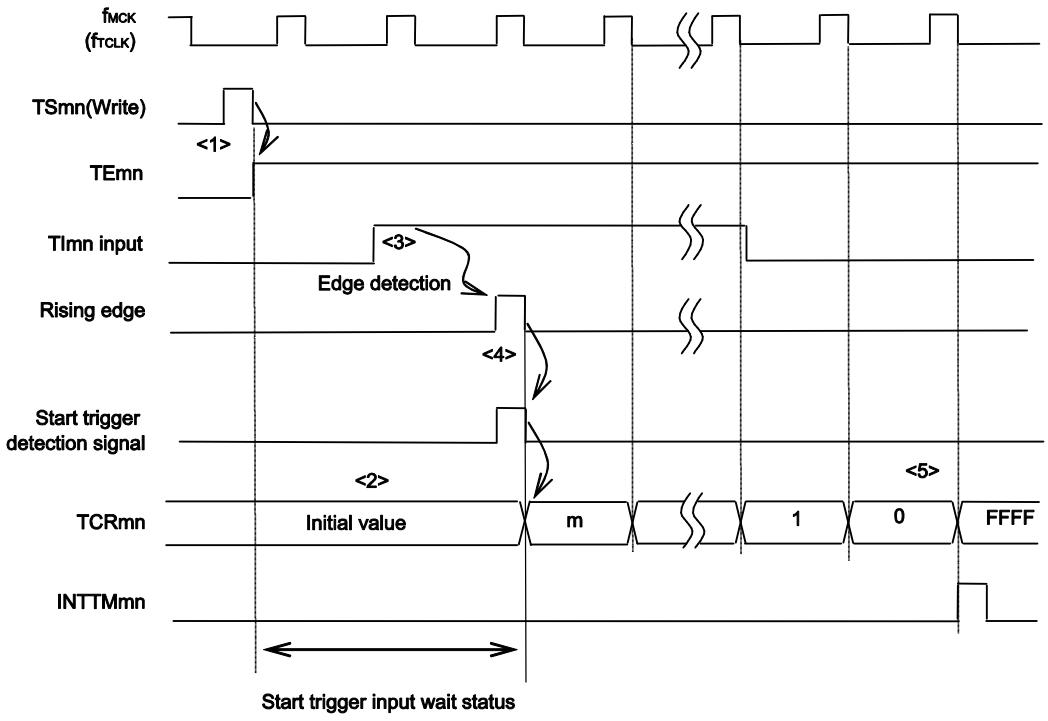

Remark The timing is shown in Figure 6-32 indicates while the noise filter is not used. By making the noise filter on-state, the edge detection becomes 2 f_{MCK} cycles (it sums up to 3 to 4 cycles) later than the normal cycle of TImn input. The error per one period occurs be the asynchronous between the period of the TImn input and that of the count clock (f_{MCK}).

<R> **(5) Operation of capture & one-count mode (high-level width measurement)**

<1> Operation is enabled (TEmn = 1) by writing 1 to the TSmn bit of timer channel start register m (TSm).
<2> Timer count register mn (TCRmn) holds the initial value until start trigger generation.
<3> Rising edge of the TImn input is detected.
<4> On start trigger detection, the value of 0000H is loaded to the TCRmn register and count starts.
<5> On detection of the falling edge of the TImn input, the value of the TCRmn register is captured to timer data register mn (TDRmn) and INTTMmn is generated.

<R> **Figure 6-33. Operation Timing (In Capture & One-count Mode: High-level Width Measurement)**

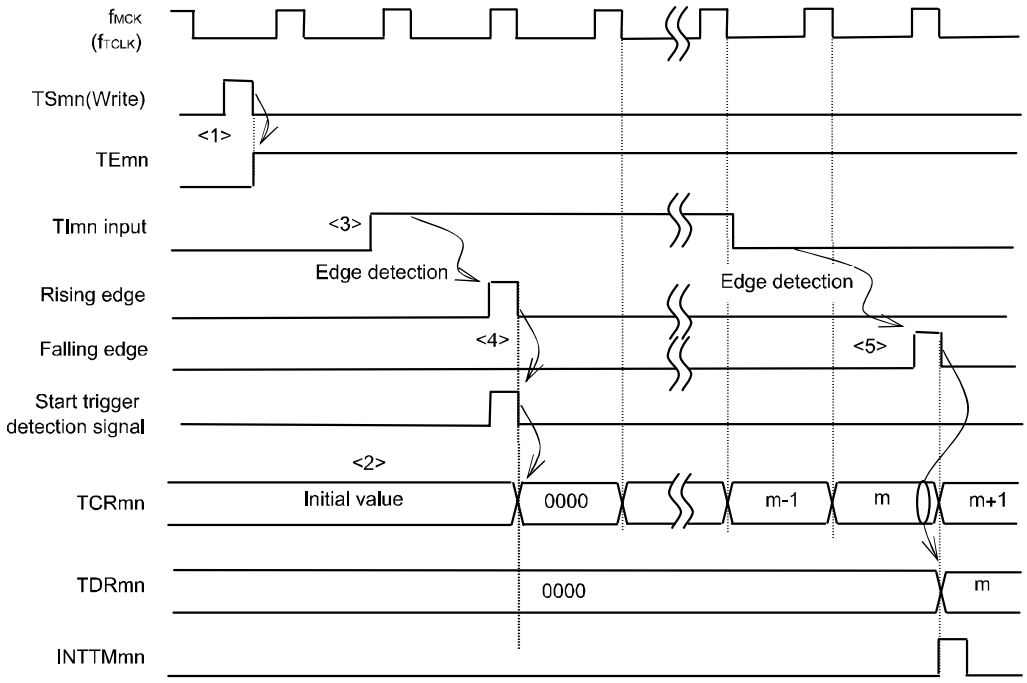

Remark The timing is shown in Figure 6-33 indicates while the noise filter is not used. By making the noise filter on-state, the edge detection becomes 2 fMCK cycles (it sums up to 3 to 4 cycles) later than the normal cycle of TImn input. The error per one period occurs because of the asynchronous relationship between the period of the TImn input and that of the count clock (fMCK).

6.6 Channel Output (TOmn pin) Control

6.6.1 TOmn pin output circuit configuration

Figure 6-34. Output Circuit Configuration

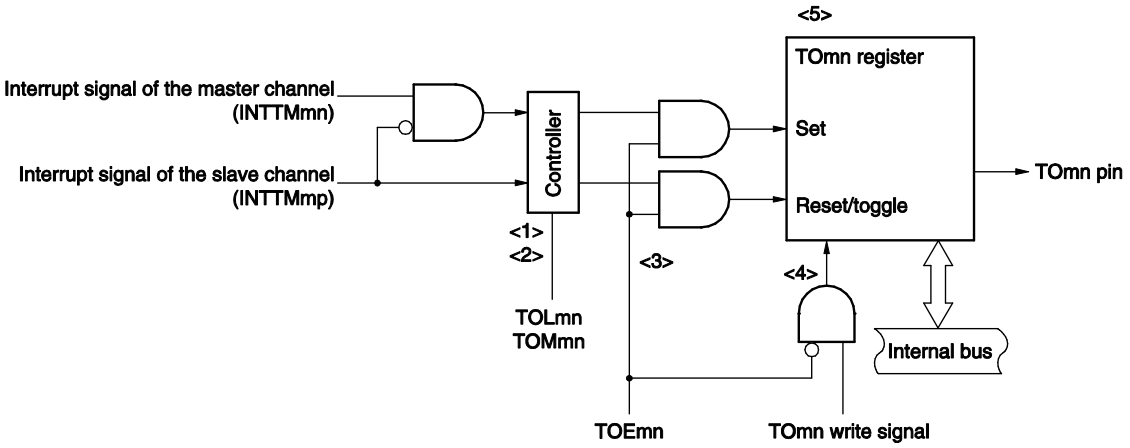

The following describes the TOmn pin output circuit.

<R> <1> When TOMmn = 0 (master channel output mode), the set value of timer output level register m (TOLm) is ignored and only INTTMmp (slave channel timer interrupt) is transmitted to timer output register m (TOm).

<R> <2> When TOMmn = 1 (slave channel output mode), both INTTMmn (master channel timer interrupt) and INTTMmp (slave channel timer interrupt) are transmitted to the TOm register.
At this time, the TOLm register becomes valid and the signals are controlled as follows:

<R> When TOLmn = 0: Forward operation (INTTMmn → set, INTTMmp → reset)
<R> When TOLmn = 1: Reverse operation (INTTMmn → reset, INTTMmp → set)

<R> When INTTMmn and INTTMmp are simultaneously generated, (0% output of PWM), INTTMmp (reset signal) takes priority, and INTTMmn (set signal) is masked.

<R> <3> While timer output is enabled (TOEmn = 1), INTTMmn (master channel timer interrupt) and INTTMmp (slave channel timer interrupt) are transmitted to the TOm register. Writing to the TOm register (TOmn write signal) becomes invalid.
When TOEmn = 1, the TOmn pin output never changes with signals other than interrupt signals.
To initialize the TOmn pin output level, it is necessary to set timer operation is stopped (TOEmn = 0) and to write a value to the TOm register.

<4> While timer output is disabled (TOEmn = 0), writing to the TOmn bit to the target channel (TOmn write signal) <R> becomes valid. When timer output is disabled (TOEmn = 0), neither INTTMmn (master channel timer interrupt) nor INTTMmp (slave channel timer interrupt) is transmitted to the TOm register.

<5> The TOm register can always be read, and the TOmn pin output level can be checked.

Remarks 1. m: Unit number (m = 0, 1)
n: Channel number
n = 0 to 7 (n = 0, 2, 4, 6 for master channel)
p: Slave channel number
$n < p \leq 7$

2. Unit 1 is not provided in the Group A products.
Channels 7 to 4 of unit 1 are not provided in the Group B, C, and D products.

6.6.2 TOmn Pin Output Setting

The following figure shows the procedure and status transition of the TOmn output pin from initial setting to timer operation start.

Figure 6-35. Status Transition from Timer Output Setting to Operation Start

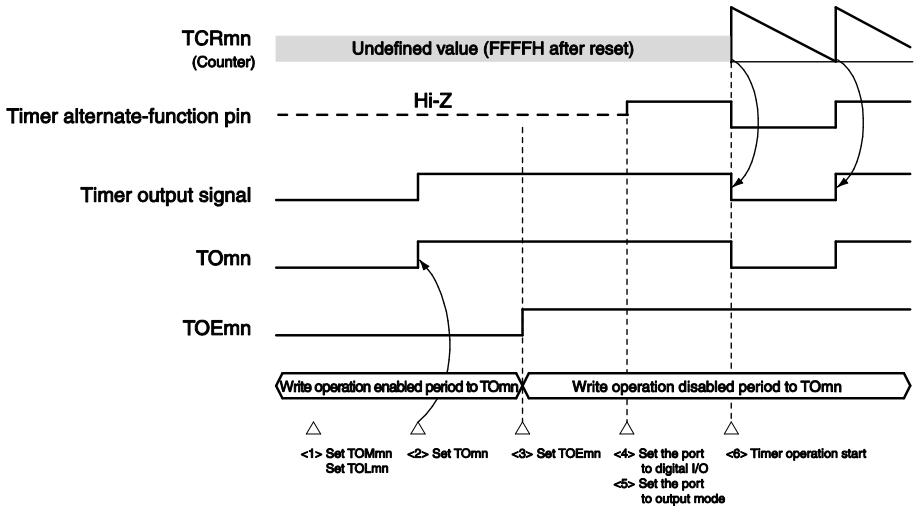

<1> The operation mode of timer output is set.

- TOMmn bit (0: Master channel output mode, 1: Slave channel output mode)
- TOLmn bit (0: Non-inverted output, 1: Inverted output)

<2> The timer output signal is set to the initial status by setting timer output register m (TOm).

<3> The timer output operation is enabled by writing 1 to the TOEmn bit (writing to the TOm register is disabled).

<4> The port mode control registers (PMCxx) are used to set the use of port pins for digital I/O (see **4.3.6 Port mode control registers 7, 9, 12 (PMC7, PMC9, PMC12)**).

<5> The port I/O setting is set to output (see **6.3.16 Port mode registers 1, 3, 4, 7, 12 (PM1, PM3, PM4, PM7, PM12)**).

<6> The timer operation is enabled (TSmn = 1).

Remarks 1. m: Unit number (m = 0, 1), n: Channel number (n = 0 to 7)

2. Unit 1 is not provided in the Group A products.
Channels 7 to 4 of unit 1 are not provided in the Group B, C, and D products.

6.6.3 Cautions on Channel Output Operation

(1) Changing values set in the registers TOm, TOEm, TOLm, and TOMm during timer operation

Since the timer operations (operations of timer count register mn (TCRmn) and timer data register mn (TDRmn)) are independent of the TOmn output circuit and changing the values set in timer output register m (TOm), timer output enable register m (TOEm), timer output level register m (TOLm), and timer output mode register m (TOMm) does not affect the timer operation, the values can be changed during timer operation. To output an expected waveform from the TOmn pin by timer operation, however, set the TOm, TOEm, TOLm, and TOMm registers to the values stated in the register setting example of each operation shown by 6.7 and 6.8.

When the values set to the TOEm, TOLm, and TOMm registers (but not the TOm register) are changed close to the occurrence of the timer interrupt (INTTMmn) of each channel, the waveform output to the TOmn pin might differ, depending on whether the values are changed immediately before or immediately after the timer interrupt (INTTMmn) occurs.

Remarks 1. m: Unit number (m = 0, 1), n: Channel number (n = 0 to 7)

2. Unit 1 is not provided in the Group A products.
Channels 7 to 4 of unit 1 are not provided in the Group B, C, and D products.

(2) Default level of TOmn pin and output level after timer operation start

The change in the output level of the TOmn pin when timer output register m (TOm) is written while timer output is disabled (TOEmn = 0), the initial level is changed, and then timer output is enabled (TOEmn = 1) before port output is enabled, is shown below.

(a) When operation starts with master channel output mode (TOMmn = 0) setting

The setting of timer output level register m (TOLm) is invalid when master channel output mode (TOMmn = 0). When the timer operation starts after setting the default level, the toggle signal is generated and the output level of the TOmn pin is reversed.

Figure 6-36. TOmn Pin Output Status at Toggle Output (TOMmn = 0)

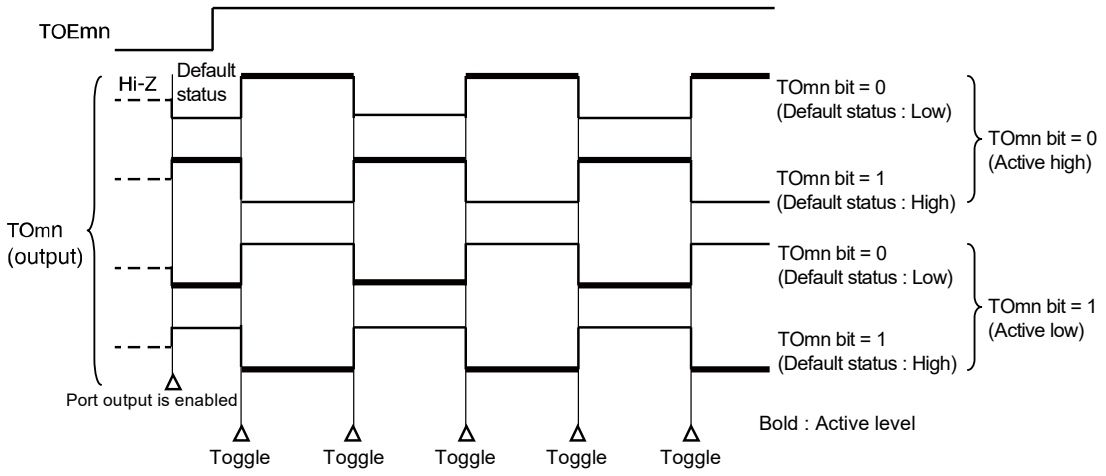

Remarks 1. Toggle: Reverse TOmn pin output status

2. m: Unit number (m = 0, 1), n: Channel number (n = 0 to 7)

3. Unit 1 is not provided in the Group A products.
Channels 7 to 4 of unit 1 are not provided in the Group B, C, and D products.

<R> **(b) When operation starts with slave channel output mode (TOMmp = 1) setting (PWM output))**

<R> When slave channel output mode (TOMmp = 1), the active level is determined by timer output level register m (TOLm) setting.

<R> **Figure 6-37. TOmp Pin Output Status at PWM Output (TOMmp = 1)**

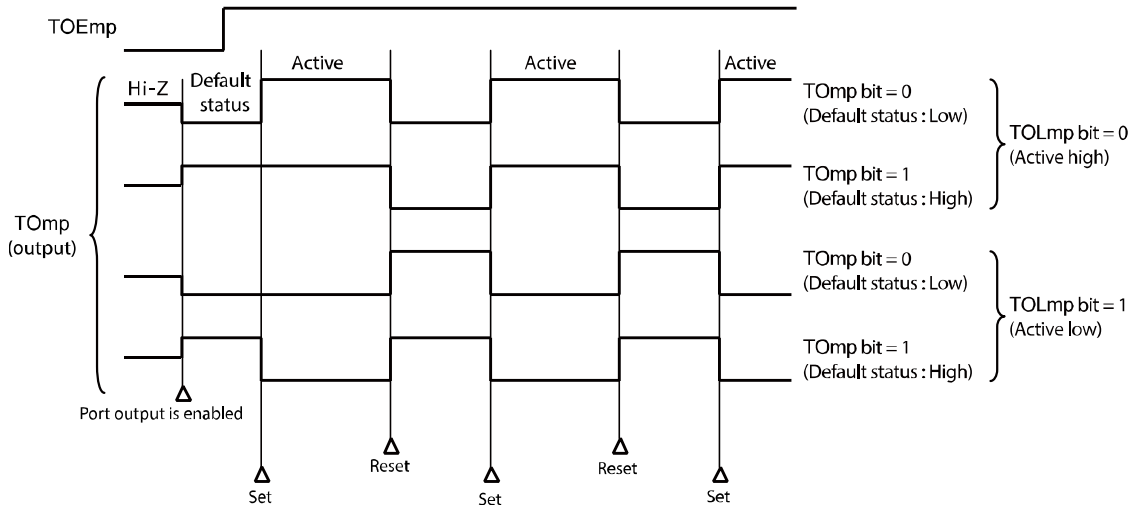

<R> **Remarks 1.** Set: The output signal of the TOmp pin changes from inactive level to active level.
Reset: The output signal of the TOmp pin changes from active level to inactive level.

<R> **2.** m: Unit number (m = 0, 1), p: Channel number (p = 1 to 7)

3. Unit 1 is not provided in the Group A products.
Channels 7 to 4 of unit 1 are not provided in the Group B, C, and D products.

(3) Operation of TOmn pin in slave channel output mode (TOMmn = 1)

(a) When timer output level register m (TOLm) setting has been changed during timer operation

When the TOLm register setting has been changed during timer operation, the setting becomes valid at the generation timing of the TOmn pin change condition. Rewriting the TOLm register does not change the output level of the TOmn pin.

The operation when TOMmn is set to 1 and the value of the TOLm register is changed while the timer is operating (TEmn = 1) is shown below.

Figure 6-38. Operation when TOLm Register Has Been Changed during Timer Operation

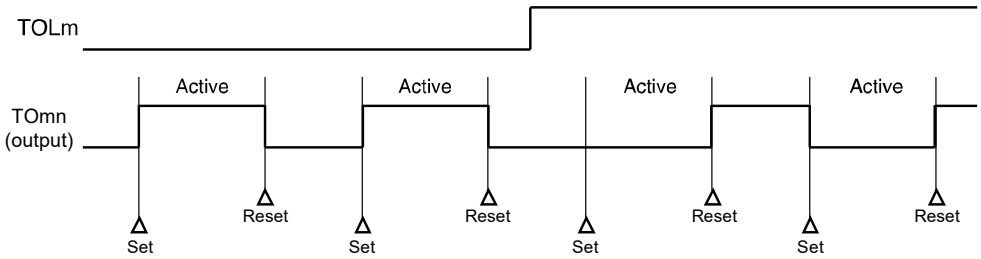

Remarks 1. Set: The output signal of the TOmn pin changes from inactive level to active level.
Reset: The output signal of the TOmn pin changes from active level to inactive level.

2. m: Unit number (m = 0, 1), n: Channel number (n = 0 to 7)

3. Unit 1 is not provided in the Group A products.
Channels 7 to 4 of unit 1 are not provided in the Group B, C, and D products.

(b) Set/reset timing

To realize 0%/100% output at PWM output, the TOmn pin/TOmn bit set timing at master channel timer interrupt (INTTMmn) generation is delayed by 1 count clock by the slave channel.

If the set condition and reset condition are generated at the same time, a higher priority is given to the latter.

Figure 6-39 shows the set/reset operating statuses where the master/slave channels are set as follows.

Master channel: TOEmn = 1, TOMmn = 0, TOLmn = 0
Slave channel: TOEmp = 1, TOMmp = 1, TOLmp = 0

Figure 6-39. Set/Reset Timing Operating Statuses

(1) Basic operation timing

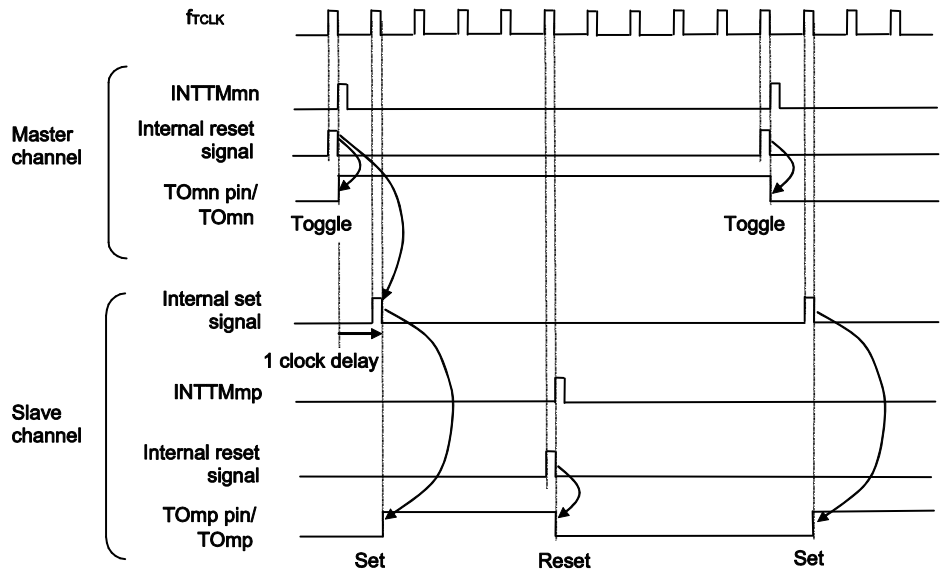

(2) Operation timing when 0 % duty

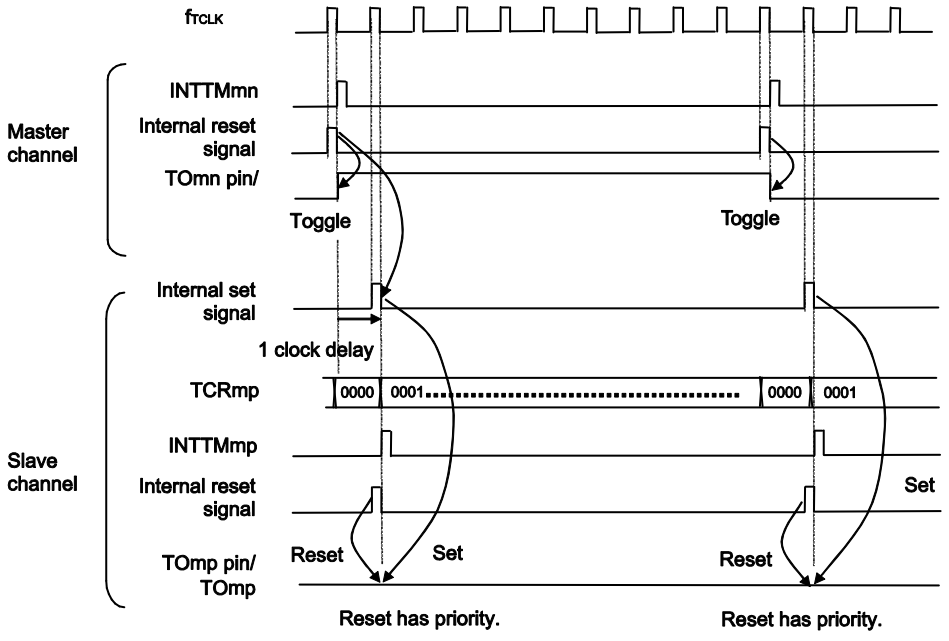

Remarks 1. Internal reset signal: TOmn pin reset/toggle signal
Internal set signal: TOmn pin set signal

2. m: Unit number (m = 0, 1)
n: Channel number
n = 0 to 7 (n = 0, 2, 4, 6 for master channel)
p: Slave channel number
$n < p \leq 7$

3. Unit 1 is not provided in the Group A products.
Channels 7 to 4 of unit 1 are not provided in the Group B, C, and D products.

6.6.4 Collective manipulation of TOmn bit

In timer output register m (TOm), the setting bits for all the channels are located in one register in the same way as timer channel start register m (TSm). Therefore, the TOmn bit of all the channels can be manipulated collectively.

Only the desired bits can also be manipulated by enabling writing only to the TOmn bits (TOEmn = 0) that correspond to the relevant bits of the channel used to perform output (TOmn).

Figure 6-40. Example of TO0n Bit Collective Manipulation

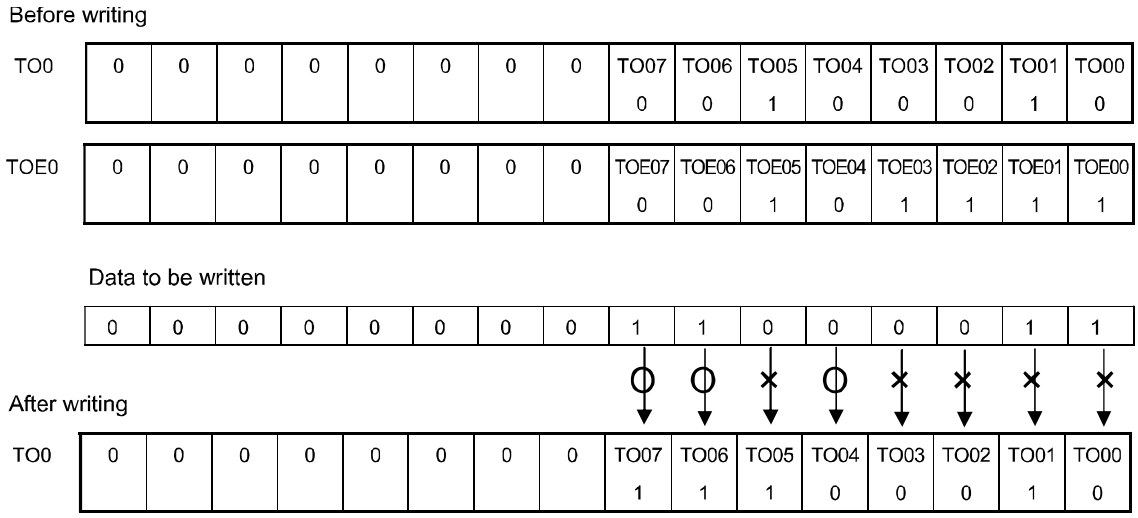

Writing is done only to the TOmn bit with TOEmn = 0, and writing to the TOmn bit with TOEmn = 1 is ignored.

TOmn (channel output) to which TOEmn = 1 is set is not affected by the write operation. Even if the write operation is done to the TOmn bit, it is ignored and the output change by timer operation is normally done.

Figure 6-41. TO0n Pin Statuses by Collective Manipulation of TO0n Bit

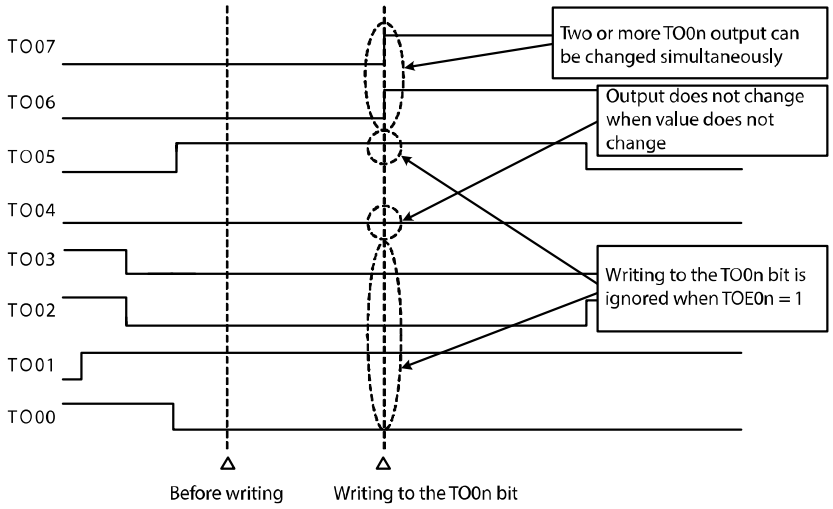

(**Caution** and **Remarks** are given on the next page.)

Caution While timer output is enabled (TOEmn = 1), even if the output by timer interrupt of each timer (INTTMmn) contends with writing to the TOmn bit, output is normally done to the TOmn pin.

Remarks 1. m: Unit number (m = 0, 1), n: Channel number (n = 0 to 7)

2. Unit 1 is not provided in the Group A products.
Channels 7 to 4 of unit 1 are not provided in the Group B, C, and D products.

6.6.5 Timer Interrupt and TOmn Pin Output at Operation Start

In the interval timer mode or capture mode, the MDmn0 bit in timer mode register mn (TMRmn) sets whether or not to generate a timer interrupt at count start.

When MDmn0 is set to 1, the count operation start timing can be known by the timer interrupt (INTTMmn) generation.

In the other modes, neither timer interrupt at count operation start nor TOmn output is controlled.

<R> Figure 6-42 show operation examples when the interval timer mode (TOEmn = 1, TOMmn = 0) is set.

Figure 6-42. Operation examples of timer interrupt at count operation start and TOmn output

(a) When MDmn0 is set to 1

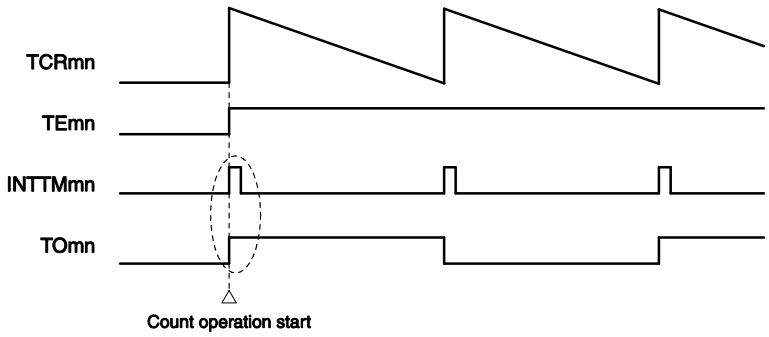

(b) When MDmn0 is set to 0

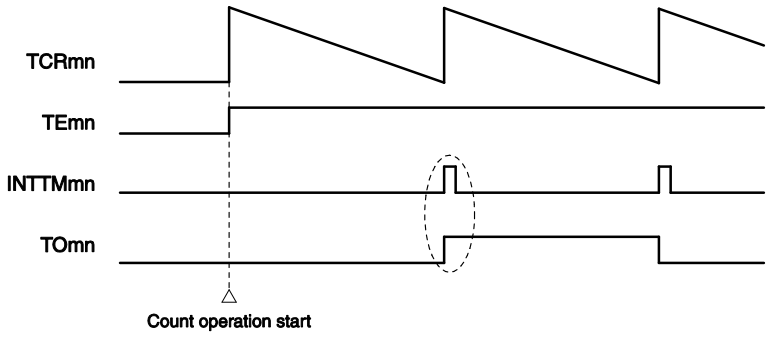

When MDmn0 is set to 1, a timer interrupt (INTTMmn) is output at count operation start, and TOmn performs a toggle operation.

When MDmn0 is set to 0, a timer interrupt (INTTMmn) is not output at count operation start, and TOmn does not change either. After counting one cycle, INTTMmn is output and TOmn performs a toggle operation.

Remarks 1. m: Unit number (m = 0, 1), n: Channel number (n = 0 to 7)

2. Unit 1 is not provided in the Group A products.
Channels 7 to 4 of unit 1 are not provided in the Group B, C, and D products.

6.7 Independent Channel Operation Function of Timer Array Unit

6.7.1 Operation as interval timer/square wave output

(1) Interval timer

The timer array unit can be used as a reference timer that generates INTTMmn (timer interrupt) at fixed intervals.
The interrupt generation period can be calculated by the following expression.

Generation period of INTTMmn (timer interrupt) = Period of count clock × (Set value of TDRmn + 1)

(2) Operation as square wave output

TOmn performs a toggle operation as soon as INTTMmn has been generated, and outputs a square wave with a duty factor of 50%.
The period and frequency for outputting a square wave from TOmn can be calculated by the following expressions.

• Period of square wave output from TOmn = Period of count clock × (Set value of TDRmn + 1) × 2
• Frequency of square wave output from TOmn = Frequency of count clock/{(Set value of TDRmn + 1) × 2}

Timer count register mn (TCRmn) operates as a down counter in the interval timer mode.
The TCRmn register loads the value of timer data register mn (TDRmn) at the first count clock after the channel start trigger bit (TSmn, TSHm1, TSHm3) of timer channel start register m (TSm) is set to 1. If the MDmn0 bit of timer mode register mn (TMRmn) is 0 at this time, INTTMmn is not output and TOmn is not toggled. If the MDmn0 bit of the TMRmn register is 1, INTTMmn is output and TOmn is toggled.
After that, the TCRmn register count down in synchronization with the count clock.
When TCRmn = 0000H, INTTMmn is output and TOmn is toggled at the next count clock. At the same time, the TCRmn register loads the value of the TDRmn register again. After that, the same operation is repeated.
The TDRmn register can be rewritten at any time. The new value of the TDRmn register becomes valid from the next period.

Remarks 1. m: Unit number (m = 0, 1), n: Channel number (n = 0 to 7)
2. Unit 1 is not provided in the Group A products.
Channels 7 to 4 of unit 1 are not provided in the Group B, C, and D products.

Figure 6-43. Block Diagram of Operation as Interval Timer/Square Wave Output

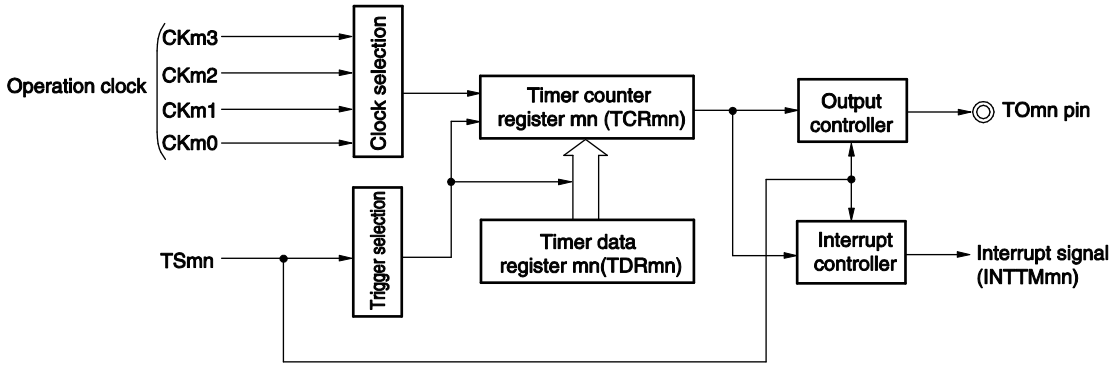

Figure 6-44. Example of Basic Timing of Operation as Interval Timer/Square Wave Output (MDmn0 = 1)

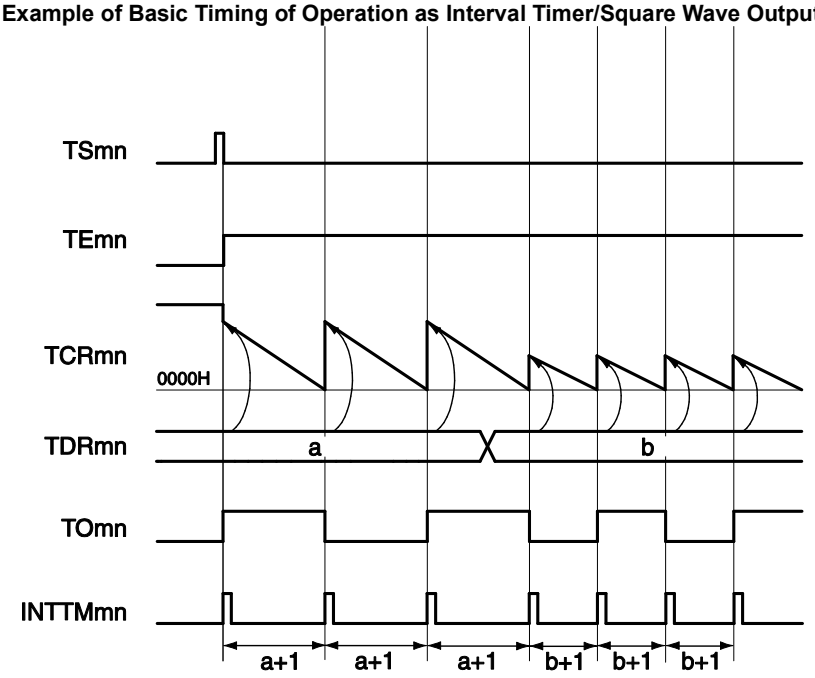

Remarks 1. m: Unit number (m = 0, 1), n: Channel number (n = 0 to 7)

2. TSmn: Bit n of timer channel start register m (TSm)
TEmn: Bit n of timer channel enable status register m (TEm)
TCRmn: Timer count register mn (TCRmn)
TDRmn: Timer data register mn (TDRmn)
TOmn: TOmn pin output signal

3. Unit 1 is not provided in the Group A products.
Channels 7 to 4 of unit 1 are not provided in the Group B, C, and D products.

Figure 6-45. Example of Set Contents of Registers During Operation as Interval Timer/Square Wave Output (1/2)

(a) Timer mode register mn (TMRmn)

	15	14	13	12	11	10	9	8	7	6	5	4	3	2	1	0
TMRmn	CKSmn1	CKSmn0		CCSmn	M/S Note	STSmn2	STSmn1	STSmn0	CISmn1	CISmn0			MDmn3	MDmn2	MDmn1	MDmn0
	1/0	1/0	0	0	0/1	0	0	0	0	0	0	0	0	0	0	1/0

Operation mode of channel n
000B: Interval timer

Setting of operation when counting is started
0: Neither generates INTTMmn nor inverts timer output when counting is started.
1: Generates INTTMmn and inverts timer output when counting is started.

Selection of TImn pin input edge
00B: Sets 00B because these are not used.

Start trigger selection
000B: Selects only software start.

Setting of MASTERmn bit (channels 2, 4, 6)
0: Independent channel operation function.

Setting of SPLITmn bit (channels 1, 3)
0: 16-bit timer mode
1: 8-bit timer mode

<R>

Count clock selection
0: Selects operation clock (f_{MCK}).

Operation clock (f_{MCK}) selection
00B: Selects CKm0 as operation clock of channel n.
10B: Selects CKm1 as operation clock of channel n.
01B: Selects CKm2 as operation clock of channel n.
11B: Selects CKm3 as operation clock of channel n.

(b) Timer output register m (TOm)

	Bit n
TOm	TOmn
	1/0

0: Outputs 0 from TOmn.
1: Outputs 1 from TOmn.

(c) Timer output enable register m (TOEm)

	Bit n
TOEm	TOEmn
	1/0

0: Stops the TOmn output operation by counting operation.
1: Enables the TOmn output operation by counting operation.

Note TMRm2, TMRm4, TMRm6: MASTERmn bit
TMRm1, TMRm3: SPLITmn bit
TMRm0, TMRm5, TMRm7: Fixed to 0

Remarks 1. m: Unit number (m = 0, 1), n: Channel number (n = 0 to 7)
2. Unit 1 is not provided in the Group A products.
Channels 7 to 4 of unit 1 are not provided in the Group B, C, and D products.

Figure 6-45. Example of Set Contents of Registers During Operation as Interval Timer/Square Wave Output (2/2)

(d) Timer output level register m (TOLm)

	Bit n	
TOLm	TOLmn 0	0: Cleared to 0 when TOMmn = 0 (master channel output mode)

(e) Timer output mode register m (TOMm)

	Bit n	
TOMm	TOMmn 0	0: Sets master channel output mode.

Remarks 1. m: Unit number (m = 0, 1), n: Channel number (n = 0 to 7)

2. Unit 1 is not provided in the Group A products.
Channels 7 to 4 of unit 1 are not provided in the Group B, C, and D products.

Figure 6-46. Operation Procedure of Interval Timer/Square Wave Output Function (1/2)

	Software Operation	Hardware Status
TAU default setting		Power-off status (Clock supply is stopped and writing to each register is disabled.)
	Sets the TAUmEN bit of peripheral enable register 0 (PER0) to 1.	Power-on status. Each channel stops operating. (Clock supply is started and writing to each register is enabled.)
	Sets timer clock select register m (TPSm). Determines clock frequencies of CKm0 to CKm3.	
Channel default setting	Sets timer mode register mn (TMRmn) (determines operation mode of channel). Sets interval (period) value to timer data register mn (TDRmn).	Channel stops operating. (Clock is supplied and some power is consumed.)
	To use the TOmn output Clears the TOMmn bit of timer output mode register m (TOMm) to 0 (master channel output mode). Clears the TOLmn bit to 0. Sets the TOmn bit and determines default level of the TOmn output.	The TOmn pin goes into Hi-Z output state. The TOmn default setting level is output when the port mode register is in the output mode and the port register is 0.
	Sets the TOEmn bit to 1 and enables operation of TOmn. Clears the port register and port mode register to 0.	TOmn does not change because channel stops operating. The TOmn pin outputs the TOmn set level.
Operation start	(Sets the TOEmn bit to 1 only if using TOmn output and resuming operation.). Sets the TSmn (TSHm1, TSHm3) bit to 1. The TSmn (TSHm1, TSHm3) bit automatically returns to 0 because it is a trigger bit.	TEmn (TEHm1, TEHm3) = 1, and count operation starts. Value of the TDRmn register is loaded to timer count register mn (TCRmn) at the count clock input. INTTMmn is generated and TOmn performs toggle operation if the MDmn0 bit of the TMRmn register is 1.
During operation	Set values of the TMRmn register, TOMmn, and TOLmn bits cannot be changed. Set value of the TDRmn register can be changed. The TCRmn register can always be read. The TSRmn register is not used. Set values of the TOm and TOEm registers can be changed.	Counter (TCRmn) counts down. When count value reaches 0000H, the value of the TDRmn register is loaded to the TCRmn register again and the count operation is continued. By detecting TCRmn = 0000H, INTTMmn is generated and TOmn performs toggle operation. After that, the above operation is repeated.
Operation stop	The TTmn (TTHm1, TTHm3) bit is set to 1. The TTmn (TTHm1, TTHm3) bit automatically returns to 0 because it is a trigger bit.	TEmn (TEHm1, TEHm3), and count operation stops. The TCRmn register holds count value and stops. The TOmn output is not initialized but holds current status.
	The TOEmn bit is cleared to 0 and value is set to the TOmn bit.	The TOmn pin outputs the TOmn bit set level.

Operation is resumed.

(**Remarks** are listed on the next page.)

Figure 6-46. Operation Procedure of Interval Timer/Square Wave Output Function (2/2)

	Software Operation	Hardware Status
TAU stop	To hold the TOmn pin output level Clears the TOmn bit to 0 after the value to be held is set to the port register. →	The TOmn pin output level is held by port function.
	When holding the TOmn pin output level is not necessary Setting not required.	
	The TAUmEN bit of the PER0 register is cleared to 0. →	Power-off status All circuits are initialized and SFR of each channel is also initialized. (The TOmn bit is cleared to 0 and the TOmn pin is set to port mode.)

Remarks 1. m: Unit number (m = 0, 1), n: Channel number (n = 0 to 7)

2. Unit 1 is not provided in the Group A products.
Channels 7 to 4 of unit 1 are not provided in the Group B, C, and D products.

6.7.2 Operation as external event counter

The timer array unit can be used as an external event counter that counts the number of times the valid input edge (external event) is detected in the TImn pin. When a specified count value is reached, the event counter generates an interrupt. The specified number of counts can be calculated by the following expression.

Specified number of counts = Set value of TDRmn + 1

Timer count register mn (TCRmn) operates as a down counter in the event counter mode.

The TCRmn register loads the value of timer data register mn (TDRmn) by setting any channel start trigger bit (TSmn, TSHm1, TSHm3) of timer channel start register m (TSm) to 1.

The TCRmn register counts down each time the valid input edge of the TImn pin has been detected. When TCRmn = 0000H, the TCRmn register loads the value of the TDRmn register again, and outputs INTTMmn.

After that, the above operation is repeated.

An irregular waveform that depends on external events is output from the TOmn pin. Stop the output by setting the TOEmn bit of timer output enable register m (TOEm) to 0.

The TDRmn register can be rewritten at any time. The new value of the TDRmn register becomes valid during the next count period.

Figure 6-47. Block Diagram of Operation as External Event Counter

<R>

<R>

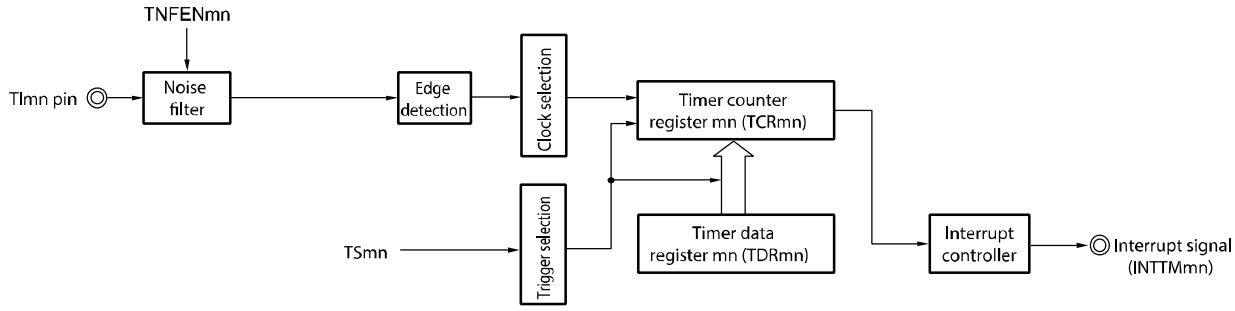

Remarks 1. m: Unit number (m = 0, 1), n: Channel number (n = 0 to 7)

2. Unit 1 is not provided in the Group A products.
Channels 7 to 4 of unit 1 are not provided in the Group B, C, and D products.

Figure 6-48. Example of Basic Timing of Operation as External Event Counter

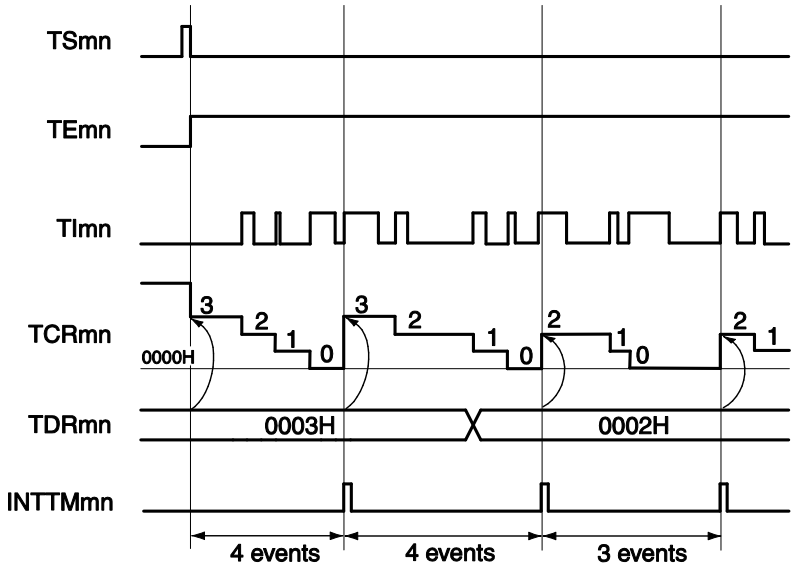

Remarks 1. m: Unit number (m = 0, 1), n: Channel number (n = 0 to 7)

2. TSmn: Bit n of timer channel start register m (TSm)

TEmn: Bit n of timer channel enable status register m (TEm)

TImn: TImn pin input signal

TCRmn: Timer count register mn (TCRmn)

TDRmn: Timer data register mn (TDRmn)

3. Unit 1 is not provided in the Group A products.

Channels 7 to 4 of unit 1 are not provided in the Group B, C, and D products.

Figure 6-49. Example of Set Contents of Registers in External Event Counter Mode (1/2)

(a) Timer mode register mn (TMRmn)

	15	14	13	12	11	10	9	8	7	6	5	4	3	2	1	0
TMRmn	CKSmn1	CKSmn0		CCSmn	M/S Note	STSmn2	STSmn1	STSmn0	CISmn1	CISmn0			MDmn3	MDmn2	MDmn1	MDmn0
	1/0	1/0	0	1	0/1	0	0	0	1/0	1/0	0	0	0	1	1	0

Operation mode of channel n
011B: Event counter mode

Setting of operation when counting is started
0: Neither generates INTTMmn nor inverts timer output when counting is started.

Selection of TImn pin input edge
00B: Detects falling edge.
01B: Detects rising edge.
10B: Detects both edges.
11B: Setting prohibited

Start trigger selection
000B: Selects only software start.

Setting of MASTERmn bit (channels 2, 4, 6)
0: Independent channel operation function.

Setting of SPLITmn bit (channels 1, 3)
0: 16-bit timer mode
1: 8-bit timer mode

Count clock selection
1: Selects the TImn pin input valid edge.

Operation clock (f_{MCK}) selection
00B: Selects CKm0 as operation clock of channel n.
10B: Selects CKm1 as operation clock of channel n.
01B: Selects CKm2 as operation clock of channel n.
11B: Selects CKm3 as operation clock of channel n.

(b) Timer output register m (TOm)

	Bit n
TOm	TOmn
	0

0: Outputs 0 from TOmn.

(c) Timer output enable register m (TOEm)

	Bit n
TOEm	TOEmn
	0

0: Stops the TOmn output operation by counting operation.

Note TMRm2, TMRm4, TMRm6: MASTERmn bit
TMRm1, TMRm3: SPLITmn bit
TMRm0, TMRm5, TMRm7: Fixed to 0

Remarks 1. m: Unit number (m = 0, 1), n: Channel number (n = 0 to 7)
2. Unit 1 is not provided in the Group A products.
Channels 7 to 4 of unit 1 are not provided in the Group B, C, and D products.

Figure 6-49. Example of Set Contents of Registers in External Event Counter Mode (2/2)

(d) Timer output level register m (TOLm)

	Bit n	
TOLm	TOLmn 0	0: Cleared to 0 when TOMmn = 0 (master channel output mode).

(e) Timer output mode register m (TOMm)

	Bit n	
TOMm	TOMmn 0	0: Sets master channel output mode.

Remarks 1. m: Unit number (m = 0, 1), n: Channel number (n = 0 to 7)

2. Unit 1 is not provided in the Group A products.
Channels 7 to 4 of unit 1 are not provided in the Group B, C, and D products.

<R> **Figure 6-50. Operation Procedure When External Event Counter Function Is Used**

	Software Operation	Hardware Status
TAU default setting		Power-off status (Clock supply is stopped and writing to each register is disabled.)
	Sets the TAUmEN bit of peripheral enable register 0 (PER0) to 1. →	Power-on status. Each channel stops operating. (Clock supply is started and writing to each register is enabled.)
	Sets timer clock select register m (TPSm). Determines clock frequencies of CKm0 to CKm3.	
Channel default setting	Sets the corresponding bit of the noise filter enable registers 1, 2 (NFEN1, NFEN2) to 0 (off) or 1 (on). Sets timer mode register mn (TMRmn) (determines operation mode of channel). Sets number of counts to timer data register mn (TDRmn). Clears the TOEmn bit of timer output enable register m (TOEm) to 0.	Channel stops operating. (Clock is supplied and some power is consumed.)
Operation start	Sets the TSmn bit to 1. →	TEmn = 1, and count operation starts. Value of the TDRmn register is loaded to timer count register mn (TCRmn) and detection of the TImn pin input edge is awaited.
During operation	Set value of the TDRmn register can be changed. The TCRmn register can always be read. The TSRmn register is not used. Set values of the TMRmn register, TOMmn, TOLmn, TOmn, and TOEmn bits cannot be changed.	Counter (TCRmn) counts down each time input edge of the TImn pin has been detected. When count value reaches 0000H, the value of the TDRmn register is loaded to the TCRmn register again, and the count operation is continued. By detecting TCRmn = 0000H, the INTTMmn output is generated. After that, the above operation is repeated.
Operation stop	The TTmn bit is set to 1. →	TEmn = 0, and count operation stops. The TCRmn register holds count value and stops.
TAU stop	The TAUmEN bit of the PER0 register is cleared to 0. →	Power-off status All circuits are initialized and SFR of each channel is also initialized.

Operation is resumed.

Remarks 1. m: Unit number (m = 0, 1), n: Channel number (n = 0 to 7)

2. Unit 1 is not provided in the Group A products.
Channels 7 to 4 of unit 1 are not provided in the Group B, C, and D products.

6.7.3 Operation as frequency divider

The timer array unit can be used as a frequency divider that divides a clock input to the TImn pin and outputs the result from the TOmn pin.

<R> Set the TImn and TOmn pins so that they are different from each other by the peripheral I/O redirection registers 0, 1, 2, and 3 (PIOR0, PIOR1, PIOR2, and PIOR3).

The divided clock frequency output from TOmn can be calculated by the following expression.

<R>

- When rising edge/falling edge is selected:
  Divided clock frequency = Input clock frequency/{(Set value of TDRmn + 1) × 2}
- When both edges are selected:
  Divided clock frequency ≅ Input clock frequency/(Set value of TDRmn + 1)

Timer count register m (TCRm) operates as a down counter in the interval timer mode.

<R> After the channel start trigger bit (TSmn) of timer channel start register 0 (TS0) is set to 1, the TCRmn register loads the value of timer data register 00 (TDRmn) when the TImn valid edge is detected.

If the MDmn0 bit of timer mode register 00 (TMR00) is 0 at this time, INTTM00 is not output and TOmn is not toggled. If the MDmn0 bit of timer mode register 00 (TMR00) is 1, INTTM00 is output and TOmn is toggled.

After that, the TCRmn register counts down at the valid edge of the TImn pin. When TCRmn = 0000H, it toggles TOmn. At the same time, the TCRmn register loads the value of the TDRmn register again, and continues counting.

If detection of both the edges of the TImn pin is selected, the duty factor error of the input clock affects the divided clock period of the TOmn output.

The period of the TOmn output clock includes a sampling error of one period of the operation clock.

<R>

Clock period of TOmn output = Ideal TOmn output clock period ± Operation clock period (error)

<R> The TDRmn register can be rewritten at any time. The new value of the TDRmn register becomes valid during the next count period.

<R> **Figure 6-51. Block Diagram of Operation as Frequency Divider**

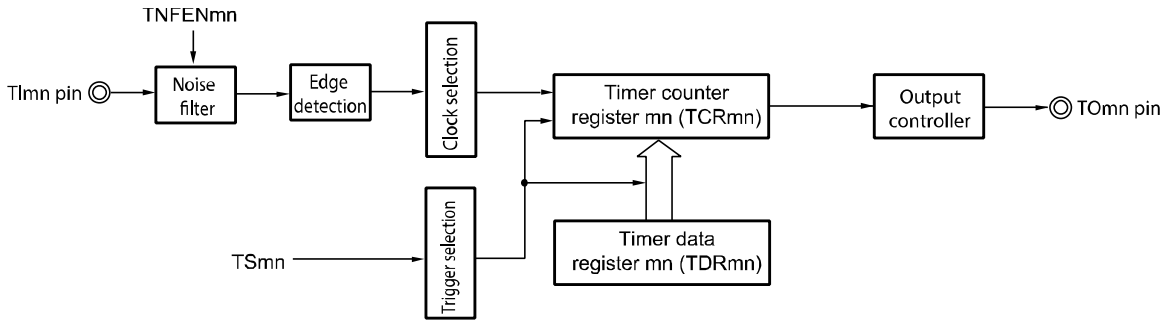

<R> **Figure 6-52. Example of Basic Timing of Operation as Frequency Divider (MDmn0 = 1)**

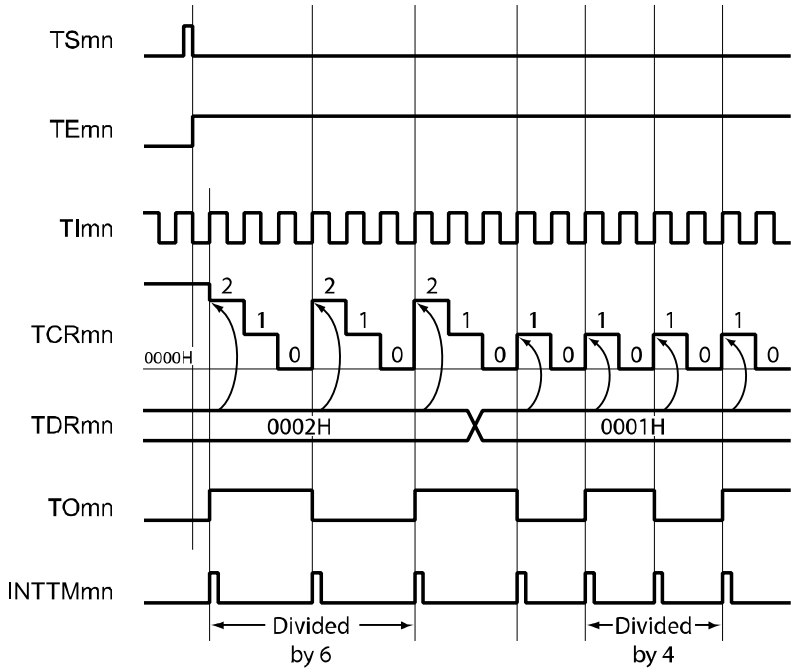

<R> **Remark** TSmn: Bit n of timer channel start register m (TSm)
TEmn: Bit n of timer channel enable status register m (TEm)
TImn: TImn pin input signal
TCRmn: Timer count register mn (TCRmn)
TDRmn: Timer data register mn (TDRmn)
TOmn: TOmn pin output signal

Figure 6-53. Example of Set Contents of Registers During Operation as Frequency Divider

<R> **(a) Timer mode register mn (TMRmn)**

	15	14	13	12	11	10	9	8	7	6	5	4	3	2	1	0
TMRmn	CKSmn1	CKSmn0		CCSmn	MAS TERmn	STSmn2	STSmn1	STSmn0	CISmn1	CISmn0			MDmn3	MDmn2	MDmn1	MDmn0
	1/0	1/0	0	1	0	0	0	0	1/0	1/0	0	0	0	1	1	1/0

Operation mode of channel n
000B: Interval timer

Setting of operation when counting is started
0: Neither generates INTTMmn nor inverts timer output when counting is started.
1: Generates INTTMmn and inverts timer output when counting is started.

Selection of TImn pin input edge
00B: Detects falling edge.
01B: Detects rising edge.
10B: Detects both edges.
11B: Setting prohibited

Start trigger selection
000B: Selects only software start.

Slave/master selection
0: Independent channel operation function.

Count clock selection
1: Selects the TImn pin input valid edge.

Operation clock (f_{MCK}) selection
00B: Selects CKm0 as operation clock of channel n.
01B: Selects CKm2 as operation clock of channel n.
10B: Selects CKm1 as operation clock of channel n.
11B: Selects CKm3 as operation clock of channel n.

(b) Timer output register m (TOm)

<R>

	Bit n
TOm	TOmn
	1/0

0: Outputs 0 from TOmn.
1: Outputs 1 from TOmn.

(c) Timer output enable register m (TOEm)

<R>

	Bit n
TOEm	TOEmn
	1/0

0: Stops the TOmn output operation by counting operation.
1: Enables the TOmn output operation by counting operation.

(d) Timer output level register m (TOLm)

<R>

	Bit n
TOLm	TOLmn
	0

0: Cleared to 0 when TOMmn = 0 (master channel output mode)

(e) Timer output mode register m (TOMm)

<R>

	Bit n
TOMm	TOMmn
	0

0: Sets master channel output mode.

<R>

Figure 6-54. Operation Procedure When Frequency Divider Function Is Used

	Software Operation	Hardware Status
TAU default setting		Power-off status (Clock supply is stopped and writing to each register is disabled.)
	Sets the TAUmEN bit of peripheral enable register 0 (PER0) to 1. →	Power-on status. Each channel stops operating. (Clock supply is started and writing to each register is enabled.)
	Sets timer clock select register m (TPSm). Determines clock frequencies of CKm0 to CKm3.	
Channel default setting	Sets the corresponding bit of the noise filter enable registers 1, 2 (NFEN1, NFEN2) to 0 (off) or 1 (on). Sets timer mode register mn (TMRmn) (determines operation mode of channel and selects the detection edge). Sets interval (period) value to timer data register mn (TDRmn).	Channel stops operating. (Clock is supplied and some power is consumed.)
	Clears the TOMmn bit of timer output mode register m (TOMm) to 0 (master channel output mode). Clears the TOLmn bit to 0. Sets the TOmn bit and determines default level of the TOmn output. →	The TOmn pin goes into Hi-Z output state. The TOmn default setting level is output when the port mode register is in output mode and the port register is 0.
	Sets the TOEmn bit to 1 and enables operation of TOmn. →	TOmn does not change because channel stops operating.
	Clears the port register and port mode register to 0. →	The TOmn pin outputs the TOmn set level.
Operation start	Sets the TOEmn bit to 1 (only when operation is resumed). →	TEmn = 1, and count operation starts. Value of the TDRmn register is loaded to timer count register mn (TCRmn) at the count clock input. INTTMmn is generated and TOmn performs toggle operation if the MDmn0 bit of the TMRmn register is 1.
During operation	Set value of the TDRmn register can be changed. The TCRmn register can always be read. The TSRmn register is not used. Set values of the TOm and TOEm registers can be changed. Set values of the TMRmn register, TOMmn, and TOLmn bits cannot be changed.	Counter (TCRmn) counts down. When count value reaches 0000H, the value of the TDRmn register is loaded to the TCRmn register again, and the count operation is continued. By detecting TCRmn = 0000H, INTTMmn is generated and TOmn performs toggle operation. After that, the above operation is repeated.
Operation stop	The TTmn bit is set to 1. →	TEmn = 0, and count operation stops. The TCRmn register holds count value and stops. The TOmn output is not initialized but holds current status.
	The TOEmn bit is cleared to 0 and value is set to the TOmn bit. →	The TOmn pin outputs the TOmn set level.
TAU stop	To hold the TOmn pin output level Clears the TOmn bit to 0 after the value to be held is set to the port register. →	The TOmn pin output level is held by port function.
	When holding the TOmn pin output level is not necessary Setting not required.	
	The TAUmEN bit of the PER0 register is cleared to 0. →	Power-off status All circuits are initialized and SFR of each channel is also initialized. (The TOmn bit is cleared to 0 and the TOmn pin is set to port mode).

Operation is resumed.

6.7.4 Operation as input pulse interval measurement

The count value can be captured at the TImn valid edge and the interval of the pulse input to TImn can be measured.

The pulse interval can be calculated by the following expression.

TImn input pulse interval = Period of count clock × ((10000H × TSRmn: OVF) + (Capture value of TDRmn + 1))

Caution The TImn pin input is sampled using the operating clock selected with the CKSmn bit of timer mode register mn (TMRmn), so an error of up to one operating clock cycle occurs.

Timer count register mn (TCRmn) operates as an up counter in the capture mode.

When the channel start trigger bit (TSmn) of timer channel start register m (TSm) is set to 1, the TCRmn register counts up from 0000H in synchronization with the count clock.

When the TImn pin input valid edge is detected, the count value of the TCRmn register is transferred (captured) to timer data register mn (TDRmn) and, at the same time, the TCRmn register is cleared to 0000H, and the INTTMmn is output. If the counter overflows at this time, the OVF bit of timer status register mn (TSRmn) is set to 1. If the counter does not overflow, the OVF bit is cleared. After that, the above operation is repeated.

As soon as the count value has been captured to the TDRmn register, the OVF bit of the TSRmn register is updated depending on whether the counter overflows during the measurement period. Therefore, the overflow status of the captured value can be checked.

If the counter reaches a full count for two or more periods, it is judged to be an overflow occurrence, and the OVF bit of the TSRmn register is set to 1. However, a normal interval value cannot be measured for the OVF bit, if two or more overflows occur.

Set the STSmn2 to STSmn0 bits of the TMRmn register to 001B to use the valid edges of TImn as a start trigger and a capture trigger.

When TEmn = 1, a software operation (TSmn = 1) can be used as a capture trigger, instead of using the TImn pin input.

Figure 6-55. Block Diagram of Operation as Input Pulse Interval Measurement

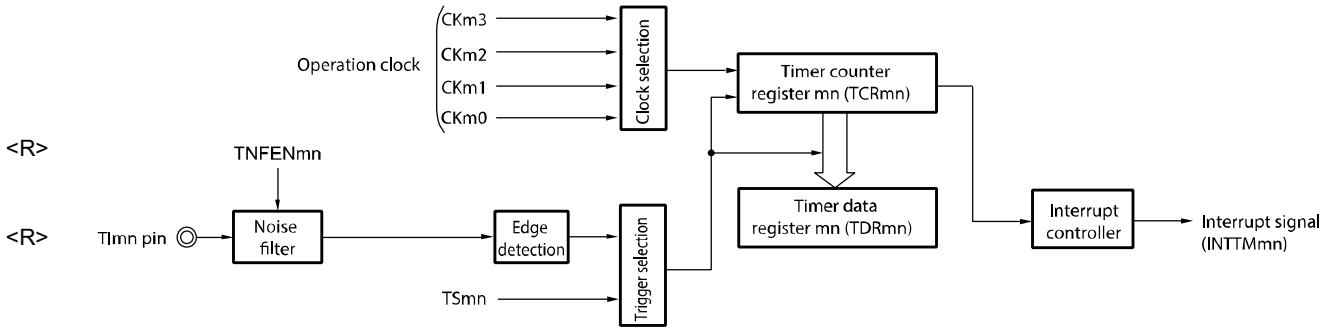

Remarks 1. m: Unit number (m = 0, 1), n: Channel number (n = 0 to 7)

2. Unit 1 is not provided in the Group A products.

Channels 7 to 4 of unit 1 are not provided in the Group B, C, and D products.

Figure 6-56. Example of Basic Timing of Operation as Input Pulse Interval Measurement (MDmn0 = 0)

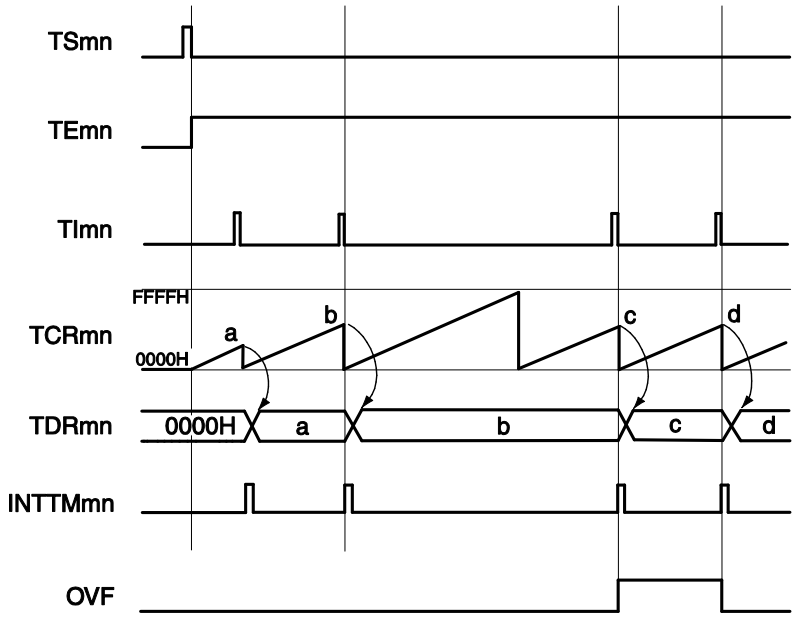

Remarks 1. m: Unit number (m = 0, 1)n: Channel number (n = 0 to 7)

2. TSmn: Bit n of timer channel start register m (TSm)
TEmn: Bit n of timer channel enable status register m (TEm)
TImn: TImn pin input signal
TCRmn: Timer count register mn (TCRmn)
TDRmn: Timer data register mn (TDRmn)
OVF: Bit 0 of timer status register mn (TSRmn)

3. Unit 1 is not provided in the Group A products.
Channels 7 to 4 of unit 1 are not provided in the Group B, C, and D products.

Figure 6-57. Example of Set Contents of Registers to Measure Input Pulse Interval

(a) Timer mode register mn (TMRmn)

	15	14	13	12	11	10	9	8	7	6	5	4	3	2	1	0
TMRmn	CKSmn1	CKSmn0		CCSmn	M/S Note	STSmn2	STSmn1	STSmn0	CISmn1	CISmn0			MDmn3	MDmn2	MDmn1	MDmn0
	1/0	1/0	0	0	0	0	0	1	1/0	1/0	0	0	0	1	0	1/0

Operation mode of channel n
010B: Capture mode

Setting of operation when counting is started
0: Does not generate INTTMmn when counting is started.
1: Generates INTTMmn when counting is started.

Selection of TImn pin input edge
00B: Detects falling edge.
01B: Detects rising edge.
10B: Detects both edges.
11B: Setting prohibited

Capture trigger selection
001B: Selects the TImn pin input valid edge.

Setting of MASTERmn bit (channels 2, 4, and 6)
0: Independent channel operation function.
Setting of SPLITmn bit (channels 1 and 3)
0: 16-bit timer function.

Count clock selection
0: Selects operation clock (f_{MCK}).

Operation clock (f_{MCK}) selection
00B: Selects CKm0 as operation clock of channel n.
10B: Selects CKm1 as operation clock of channel n.
01B: Selects CKm2 as operation clock of channel n.
11B: Selects CKm3 as operation clock of channel n.

(b) Timer output register m (TOm)

	Bit n
TOm	TOmn
	0

0: Outputs 0 from TOmn.

(c) Timer output enable register m (TOEm)

	Bit n
TOEm	TOEmn
	0

0: Stops TOmn output operation by counting operation.

(d) Timer output level register m (TOLm)

	Bit n
TOLm	TOLmn
	0

0: Cleared to 0 when TOMmn = 0 (master channel output mode).

(e) Timer output mode register m (TOMm)

	Bit n
TOMm	TOMmn
	0

0: Sets master channel output mode.

Note TMRm2, TMRm4, TMRm6: MASTERmn bit
TMRm1, TMRm3: SPLITmn bit

TMRm0, TMRm5, TMRm7: Fixed to 0

Remarks 1. m: Unit number (m = 0, 1), n: Channel number (n = 0 to 7)

2. Unit 1 is not provided in the Group A products.
Channels 7 to 4 of unit 1 are not provided in the Group B, C, and D products.

<R> **Figure 6-58. Operation Procedure When Input Pulse Interval Measurement Function Is Used**

	Software Operation	Hardware Status
TAU default setting		Power-off status (Clock supply is stopped and writing to each register is disabled.)
	Sets the TAUmEN bit of peripheral enable register 0 (PER0) to 1. →	Power-on status. Each channel stops operating. (Clock supply is started and writing to each register is enabled.)
	Sets timer clock select register m (TPSm). Determines clock frequencies of CKm0 to CKm3.	
Channel default setting	Sets the corresponding bit of the noise filter enable registers 1, 2 (NFEN1, NFEN2) to 0 (off) or 1 (on). Sets timer mode register mn (TMRmn) (determines operation mode of channel).	Channel stops operating. (Clock is supplied and some power is consumed.)
Operation start	Sets TSmn bit to 1. →	TEmn = 1, and count operation starts. Timer count register mn (TCRmn) is cleared to 0000H at the count clock input. When the MDmn0 bit of the TMRmn register is 1, INTTMmn is generated.
During operation	Set values of only the CISmn1 and CISmn0 bits of the TMRmn register can be changed. The TDRmn register can always be read. The TCRmn register can always be read. The TSRmn register can always be read. Set values of the TOMmn, TOLmn, TOmn, and TOEmn bits cannot be changed.	Counter (TCRmn) counts up from 0000H. When the TImn pin input valid edge is detected, the count value is transferred (captured) to timer data register mn (TDRmn). At the same time, the TCRmn register is cleared to 0000H, and the INTTMmn signal is generated. If an overflow occurs at this time, the OVF bit of timer status register mn (TSRmn) is set; if an overflow does not occur, the OVF bit is cleared. After that, the above operation is repeated.
Operation stop	The TTmn bit is set to 1. →	TEmn = 0, and count operation stops. The TCRmn register holds count value and stops. The OVF bit of the TSRmn register is also held.
TAU stop	The TAUmEN bit of the PER0 register is cleared to 0. →	Power-off status All circuits are initialized and SFR of each channel is also initialized.

Operation is resumed. → Operation start

Remarks 1. m: Unit number (m = 0, 1), n: Channel number (n = 0 to 7)

2. Unit 1 is not provided in the Group A products.
Channels 7 to 4 of unit 1 are not provided in the Group B, C, and D products.

6.7.5 Operation as input signal high-/low-level width measurement

Caution When using a channel to implement the LIN-bus, set bit 7 (TIS17) to 1 and bit 6 (TIS16) to 0 of the timer input select register 1 (TIS1). In the following descriptions, read TImn as RxD0.

By starting counting at one edge of the TImn pin input and capturing the number of counts at another edge, the signal width (high-level width/low-level width) of TImn can be measured. The signal width of TImn can be calculated by the following expression.

Signal width of TImn input = Period of count clock × ((10000H × TSRmn: OVF) + (Capture value of TDRmn + 1))

Caution The TImn pin input is sampled using the operating clock selected with the CKSmn bit of timer mode register mn (TMRmn), so an error equivalent to one operation clock occurs.

Timer count register mn (TCRmn) operates as an up counter in the capture & one-count mode.

When the channel start trigger bit (TSmn) of timer channel start register m (TSm) is set to 1, the TEmn bit is set to 1 and the TImn pin start edge detection wait status is set.

When the TImn pin input start edge (rising edge of the TImn pin input when the high-level width is to be measured) is detected, the counter counts up from 0000H in synchronization with the count clock. When the valid capture edge (falling edge of the TImn pin input when the high-level width is to be measured) is detected later, the count value is transferred to timer data register mn (TDRmn) and, at the same time, INTTMmn is output. If the counter overflows at this time, the OVF bit of timer status register mn (TSRmn) is set to 1. If the counter does not overflow, the OVF bit is cleared. The TCRmn register stops at the value “value transferred to the TDRmn register + 1”, and the TImn pin start edge detection wait status is set. After that, the above operation is repeated.

As soon as the count value has been captured to the TDRmn register, the OVF bit of the TSRmn register is updated depending on whether the counter overflows during the measurement period. Therefore, the overflow status of the captured value can be checked.

If the counter reaches a full count for two or more periods, it is judged to be an overflow occurrence, and the OVF bit of the TSRmn register is set to 1. However, a normal interval value cannot be measured for the OVF bit, if two or more overflows occur.

Whether the high-level width or low-level width of the TImn pin is to be measured can be selected by using the CISmn1 and CISmn0 bits of the TMRmn register.

Because this function is used to measure the signal width of the TImn pin input, the TSmn bit cannot be set to 1 while the TEmn bit is 1.

CISmn1, CISmn0 of TMRmn register = 10B: Low-level width is measured.

CISmn1, CISmn0 of TMRmn register = 11B: High-level width is measured.

Figure 6-59. Block Diagram of Operation as Input Signal High-/Low-Level Width Measurement

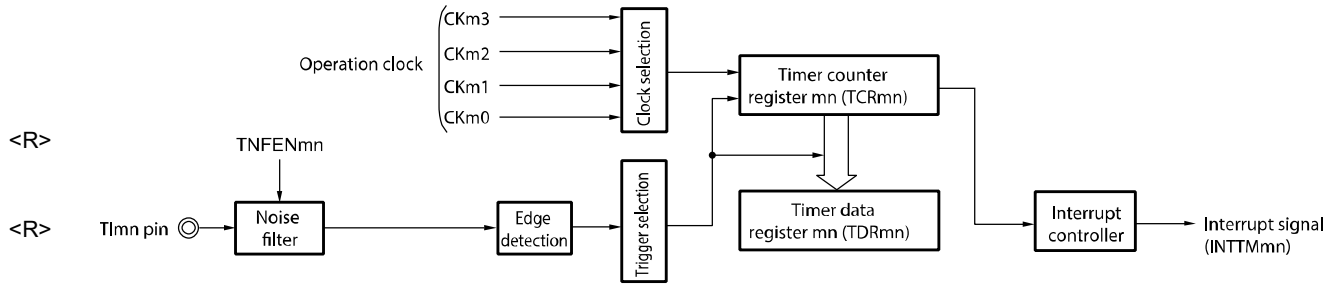

Remark m: Unit number (m = 0, 1), n: Channel number (n = 0 to 7)

Figure 6-60. Example of Basic Timing of Operation as Input Signal High-/Low-Level Width Measurement

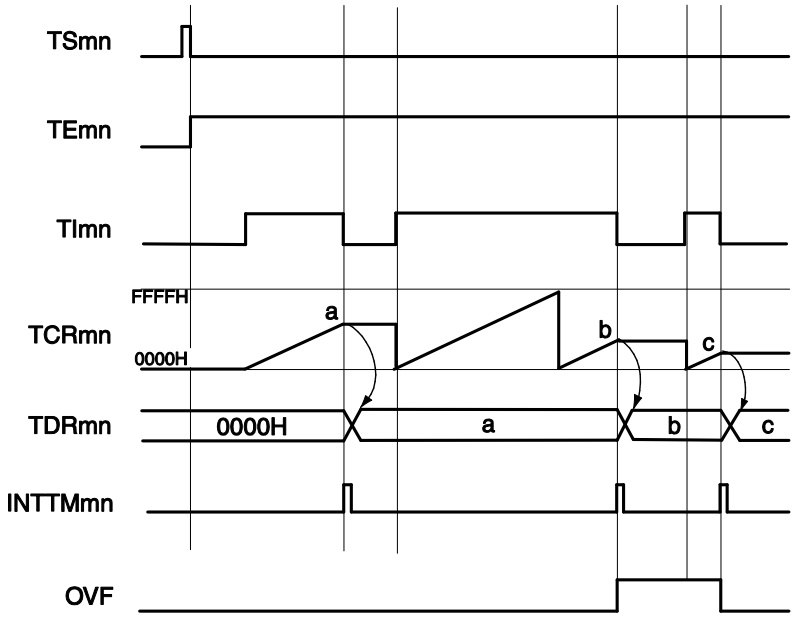

Remarks 1. m: Unit number (m = 0, 1), n: Channel number (n = 0 to 7)

2. TSmn: Bit n of timer channel start register m (TSm)
TEmn: Bit n of timer channel enable status register m (TEm)
TImn: TImn pin input signal
TCRmn: Timer count register mn (TCRmn)
TDRmn: Timer data register mn (TDRmn)
OVF: Bit 0 of timer status register mn (TSRmn)

3. Unit 1 is not provided in the Group A products.
Channels 7 to 4 of unit 1 are not provided in the Group B, C, and D products.

Figure 6-61. Example of Set Contents of Registers to Measure Input Signal High-/Low-Level Width

(a) Timer mode register mn (TMRmn)

	15	14	13	12	11	10	9	8	7	6	5	4	3	2	1	0
TMRmn	CKSmn1	CKSmn0		CCSmn	M/S Note	STSmn2	STSmn1	STSmn0	CISmn1	CISmn0			MDmn3	MDmn2	MDmn1	MDmn0
	1/0	1/0	0	0	0	0	1	0	1	1/0	0	0	1	1	0	1/0

Operation mode of channel n
110B: Capture & one-count

Setting of operation when counting is started
0: Does not generate INTTMmn when counting is started.

Selection of TImn pin input edge
10B: Both edges (to measure low-level width)
11B: Both edges (to measure high-level width)

Start trigger selection
010B: Selects the TImn pin input valid edge.

Setting of MASTERmn bit (channels 2, 4, 6)
0: Independent channel operation function.

Setting of SPLITmn bit (channels 1, 3)
0: 16-bit timer mode

Count clock selection
0: Selects operation clock (f_{MCK}).

Operation clock (f_{MCK}) selection
00B: Selects CKm0 as operation clock of channel n.
01B: Selects CKm2 as operation clock of channel n.
10B: Selects CKm1 as operation clock of channel n.
11B: Selects CKm3 as operation clock of channel n.

(b) Timer output register m (TOm)

	Bit n
TOm	TOmn
	0

0: Outputs 0 from TOmn.

(c) Timer output enable register m (TOEm)

	Bit n
TOEm	TOEmn
	0

0: Stops the TOmn output operation by counting operation.

(d) Timer output level register m (TOLm)

	Bit n
TOLm	TOLmn
	0

0: Cleared to 0 when TOMmn = 0 (master channel output mode).

(e) Timer output mode register m (TOMm)

	Bit n
TOMm	TOMmn
	0

0: Sets master channel output mode.

Note TMRm2, TMRm4, TMRm6: MASTERmn bit
TMRm1, TMRm3: SPLITmn bit
TMRm0, TMRm5, TMRm7: Fixed to 0

Remarks 1. m: Unit number (m = 0, 1), n: Channel number (n = 0 to 7)

2. Unit 1 is not provided in the Group A products.
Channels 7 to 4 of unit 1 are not provided in the Group B, C, and D products.

<R> **Figure 6-62. Operation Procedure When Input Signal High-/Low-Level Width Measurement Function Is Used**

	Software Operation	Hardware Status
TAU default setting		Power-off status (Clock supply is stopped and writing to each register is disabled.)
	Sets the TAUmEN bit of peripheral enable register 0 (PER0) to 1.	Power-on status. Each channel stops operating. (Clock supply is started and writing to each register is enabled.)
	Sets timer clock select register m (TPSm). Determines clock frequencies of CKm0 to CKm3.	
Channel default setting	Sets the corresponding bit of the noise filter enable registers 1, 2 (NFEN1, NFEN2) to 0 (off) or 1 (on). Sets timer mode register mn (TMRmn) (determines operation mode of channel). Clears the TOEmn bit to 0 and stops operation of TOmn.	Channel stops operating. (Clock is supplied and some power is consumed.)
Operation start	Sets the TSmn bit to 1. The TSmn bit automatically returns to 0 because it is a trigger bit.	TEmn = 1, and the TImn pin start edge detection wait status is set.
	Detects the TImn pin input count start valid edge.	Clears timer count register mn (TCRmn) to 0000H and starts counting up.
During operation	Set value of the TDRmn register can be changed. The TCRmn register can always be read. The TSRmn register can always be read. Set values of the TMRmn register, TOMmn, TOLmn, TOmn, and TOEmn bits cannot be changed.	When the TImn pin start edge is detected, the counter (TCRmn) counts up from 0000H. If a capture edge of the TImn pin is detected, the count value is transferred to timer data register mn (TDRmn) and INTTMmn is generated. If an overflow occurs at this time, the OVF bit of timer status register mn (TSRmn) is set; if an overflow does not occur, the OVF bit is cleared. The TCRmn register stops the count operation until the next TImn pin start edge is detected.
Operation stop	The TTmn bit is set to 1. The TTmn bit automatically returns to 0 because it is a trigger bit.	TEmn = 0, and count operation stops. The TCRmn register holds count value and stops. The OVF bit of the TSRmn register is also held.
TAU stop	The TAUmEN bit of the PER0 register is cleared to 0.	Power-off status All circuits are initialized and SFR of each channel is also initialized.

Operation is resumed.

Remarks 1. m: Unit number (m = 0, 1), n: Channel number (n = 0 to 7)

2. Unit 1 is not provided in the Group A products.
Channels 7 to 4 of unit 1 are not provided in the Group B, C, and D products.

6.7.6 Operation as delay counter

It is possible to start counting down when the valid edge of the TImn pin input is detected (an external event), and then generate INTTMmn (a timer interrupt) after any specified interval.

It can also generate INTTMmn (timer interrupt) at any interval by making a software set TSmn = 1 and the count down start during the period of TEmn = 1.

The interrupt generation period can be calculated by the following expression.

Generation period of INTTMmn (timer interrupt) = Period of count clock × (Set value of TDRmn + 1)

Timer count register mn (TCRmn) operates as a down counter in the one-count mode.

When the channel start trigger bit (TSmn, TSHm1, TSHm3) of timer channel start register m (TSm) is set to 1, the TEmn, TEHm1, TEHm3 bits are set to 1 and the TImn pin input valid edge detection wait status is set.

Timer count register mn (TCRmn) starts operating upon TImn pin input valid edge detection and loads the value of timer data register mn (TDRmn). The TCRmn register counts down from the value of the TDRmn register it has loaded, in synchronization with the count clock. When TCRmn = 0000H, it outputs INTTMmn and stops counting until the next TImn pin input valid edge is detected.

The TDRmn register can be rewritten at any time. The new value of the TDRmn register becomes valid from the next period.

Figure 6-63. Block Diagram of Operation as Delay Counter

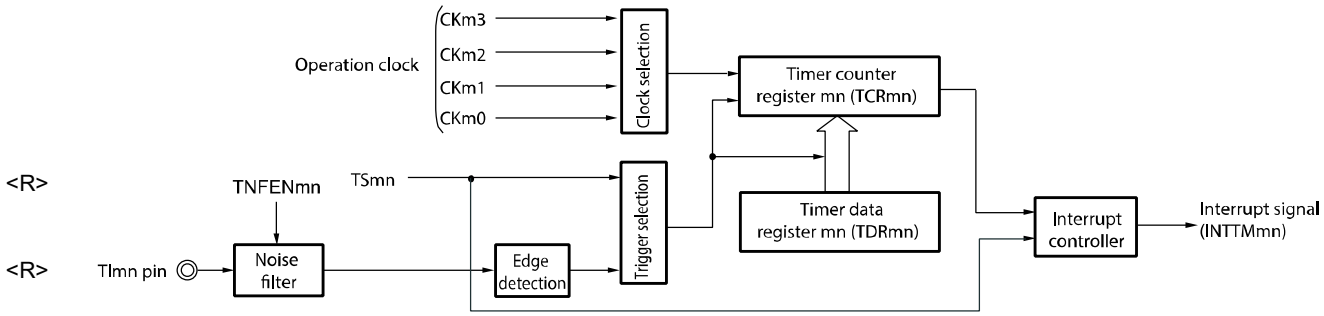

Remarks 1. m: Unit number (m = 0, 1), n: Channel number (n = 0 to 7)

2. Unit 1 is not provided in the Group A products.
Channels 7 to 4 of unit 1 are not provided in the Group B, C, and D products.

Figure 6-64. Example of Basic Timing of Operation as Delay Counter

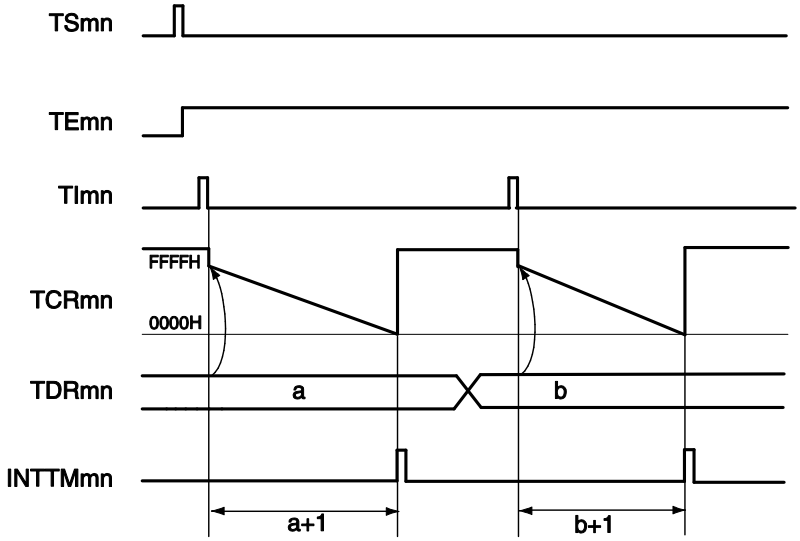

Remarks 1. m: Unit number (m = 0, 1), n: Channel number (n = 0 to 7)

2. TSmn: Bit n of timer channel start register m (TSm)

TEmn: Bit n of timer channel enable status register m (TEm)

TImn: TImn pin input signal

TCRmn: Timer count register mn (TCRmn)

TDRmn: Timer data register mn (TDRmn)

3. Unit 1 is not provided in the Group A products.

Channels 7 to 4 of unit 1 are not provided in the Group B, C, and D products.

Figure 6-65. Example of Set Contents of Registers to Delay Counter (1/2)

(a) Timer mode register mn (TMRmn)

	15	14	13	12	11	10	9	8	7	6	5	4	3	2	1	0
TMRmn	CKSmn1	CKSmn0		CCSmn	M/S Note	STSmn2	STSmn1	STSmn0	CISmn1	CISmn0			MDmn3	MDmn2	MDmn1	MDmn0
	1/0	1/0	0	0	0/1	0	0	1	1/0	1/0	0	0	1	0	0	1/0

Operation mode of channel n
100B: One-count mode

Start trigger during operation
0: Trigger input is invalid.
1: Trigger input is valid.

Selection of TImn pin input edge
00B: Detects falling edge.
01B: Detects rising edge.
10B: Detects both edges.
11B: Setting prohibited

Start trigger selection
001B: Selects the TImn pin input valid edge.

Setting of MASTERmn bit (channels 2, 4, 6)
0: Independent channel operation function.

Setting of SPLITmn bit (channels 1, 3)
0: 16-bit timer mode
1: 8-bit timer mode

<R>

Count clock selection
0: Selects operation clock (f_{MCK}).

Operation clock (f_{MCK}) selection
00B: Selects CKm0 as operation clock of channel n.
10B: Selects CKm1 as operation clock of channel n.
01B: Selects CKm2 as operation clock of channel n.
11B: Selects CKm3 as operation clock of channel n.

(b) Timer output register m (TOm)

	Bit n
TOm	TOmn
	0

0: Outputs 0 from TOmn.

(c) Timer output enable register m (TOEm)

	Bit n
TOEm	TOEmn
	0

0: Stops the TOmn output operation by counting operation.

Note TMRm2, TMRm4, TMRm6: MASTERmn bit
TMRm1, TMRm3: SPLITmn bit
TMRm0, TMRm5, TMRm7: Fixed to 0

Remarks 1. m: Unit number (m = 0, 1), n: Channel number (n = 0 to 7)
2. Unit 1 is not provided in the Group A products.
Channels 7 to 4 of unit 1 are not provided in the Group B, C, and D products.

Figure 6-65. Example of Set Contents of Registers to Delay Counter (2/2)

(d) Timer output level register m (TOLm)

	Bit n
TOLm	TOLmn 0

0: Cleared to 0 when TOMmn = 0 (master channel output mode).

(e) Timer output mode register m (TOMm)

	Bit n
TOMm	TOMmn 0

0: Sets master channel output mode.

Remarks 1. m: Unit number (m = 0, 1), n: Channel number (n = 0 to 7)

2. Unit 1 is not provided in the Group A products.
Channels 7 to 4 of unit 1 are not provided in the Group B, C, and D products.

<R>

Figure 6-66. Operation Procedure When Delay Counter Function Is Used

	Software Operation	Hardware Status
TAU default setting		Power-off status (Clock supply is stopped and writing to each register is disabled.)
	Sets the TAUmEN bit of peripheral enable register 0 (PER0) to 1. →	Power-on status. Each channel stops operating. (Clock supply is started and writing to each register is enabled.)
	Sets timer clock select register m (TPSm). Determines clock frequencies of CKm0 to CKm3.	
Channel default setting	Sets the corresponding bit of the noise filter enable registers 1, 2 (NFEN1, NFEN2) to 0 (off) or 1 (on). Sets timer mode register mn (TMRmn) (determines operation mode of channel). INTTMmn output delay is set to timer data register mn (TDRmn). Clears the TOEmn bit to 0 and stops operation of TOmn.	Channel stops operating. (Clock is supplied and some power is consumed.)
Operation start	Sets the TSmn bit to 1. → The TSmn bit automatically returns to 0 because it is a trigger bit.	TEmn = 1, and the TImn pin input valid edge detection wait status is set.
	Detects the TImn pin input valid edge. →	Value of the TDRmn register is loaded to the timer count register mn (TCRmn).
During operation	Set value of the TDRmn register can be changed. The TCRmn register can always be read. The TSRmn register is not used.	The counter (TCRmn) counts down. When TCRmn counts down to 0000H, INTTMmn is output, and counting stops (which leaves TCRmn at 0000H) until the next TImn pin input.
Operation stop	The TTmn bit is set to 1. → The TTmn bit automatically returns to 0 because it is a trigger bit.	TEmn = 0, and count operation stops. The TCRmn register holds count value and stops.
TAU stop	The TAUmEN bit of the PER0 register is cleared to 0. →	Power-off status All circuits are initialized and SFR of each channel is also initialized.

Operation is resumed.

Remarks 1. m: Unit number (m = 0, 1), n: Channel number (n = 0 to 7)

2. Unit 1 is not provided in the Group A products.
Channels 7 to 4 of unit 1 are not provided in the Group B, C, and D products.

6.8 Simultaneous Channel Operation Function of Timer Array Unit

6.8.1 Operation as one-shot pulse output function

By using two channels as a set, a one-shot pulse having any delay pulse width can be generated from the signal input to the TImn pin.

The delay time and pulse width can be calculated by the following expressions.

Delay time = {Set value of TDRmn (master) + 2} × Count clock period
Pulse width = {Set value of TDRmp (slave)} × Count clock period

The master channel operates in the one-count mode and counts the delays. Timer count register mn (TCRmn) of the master channel starts operating upon start trigger detection and loads the value of timer data register mn (TDRmn).

The TCRmn register counts down from the value of the TDRmn register it has loaded, in synchronization with the count clock. When TCRmn = 0000H, it outputs INTTMmn and stops counting until the next start trigger is detected.

The slave channel operates in the one-count mode and counts the pulse width. The TCRmp register of the slave channel starts operation using INTTMmn of the master channel as a start trigger, and loads the value of the TDRmp register. The TCRmp register counts down from the value of The TDRmp register it has loaded, in synchronization with the count value. When count value = 0000H, it outputs INTTMmp and stops counting until the next start trigger (INTTMmn of the master channel) is detected. The output level of TOmp becomes active one count clock after generation of INTTMmn from the master channel, and inactive when TCRmp = 0000H.

Instead of using the TImn pin input, a one-shot pulse can also be output using the software operation (TSmn = 1) as a start trigger.

Caution The timing of loading of timer data register mn (TDRmn) of the master channel is different from that of the TDRmp register of the slave channel. If the TDRmn and TDRmp registers are rewritten during operation, therefore, an illegal waveform is output. Rewrite the TDRmn register after INTTMmn is generated and the TDRmp register after INTTMmp is generated.

Remarks 1. m: Unit number (m = 0, 1), n: Master channel number (n = 0, 2, 4, 6)
p: Slave channel number ($n < p \leq 7$)

2. Unit 1 is not provided in the Group A products.
Channels 7 to 4 of unit 1 are not provided in the Group B, C, and D products.

Figure 6-67. Block Diagram of Operation as One-Shot Pulse Output Function

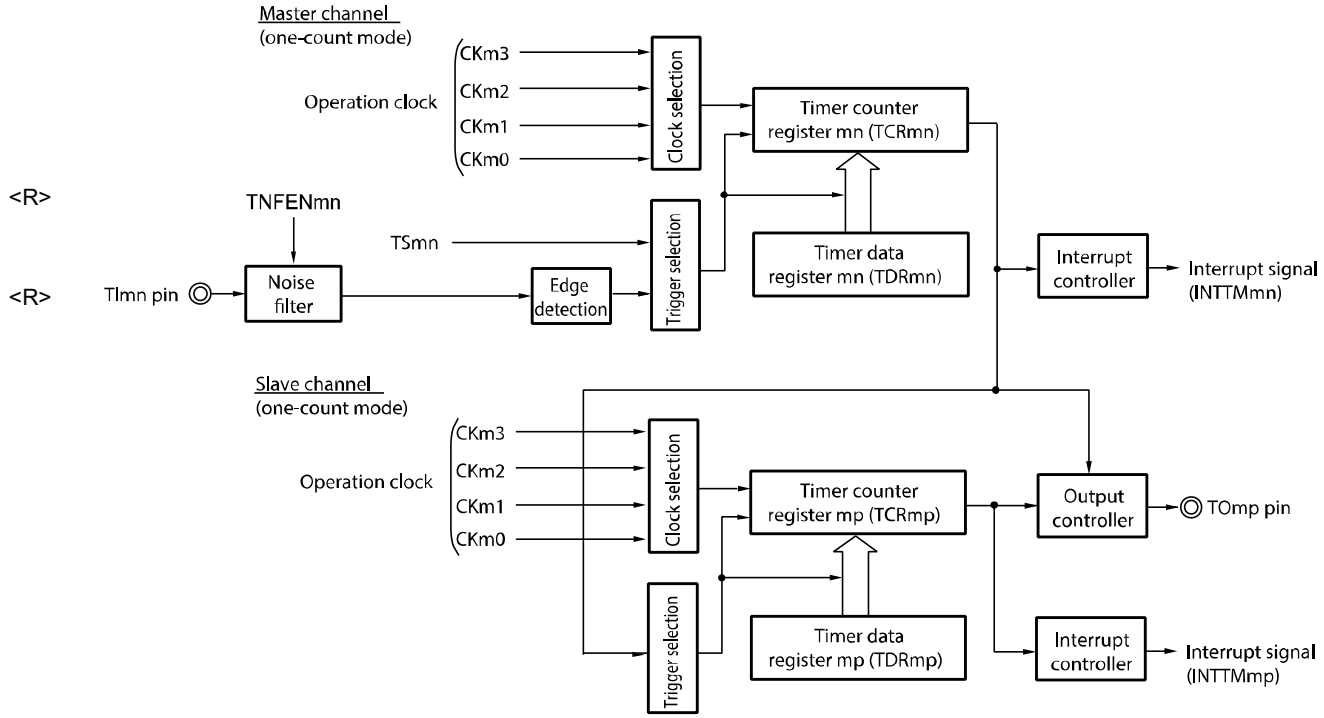

Remarks 1. m: Unit number (m = 0, 1), n: Master channel number (n = 0, 2, 4, 6)
p: Slave channel number (n < p ≤ 7)

2. Unit 1 is not provided in the Group A products.
Channels 7 to 4 of unit 1 are not provided in the Group B, C, and D products.

Figure 6-68. Example of Basic Timing of Operation as One-Shot Pulse Output Function

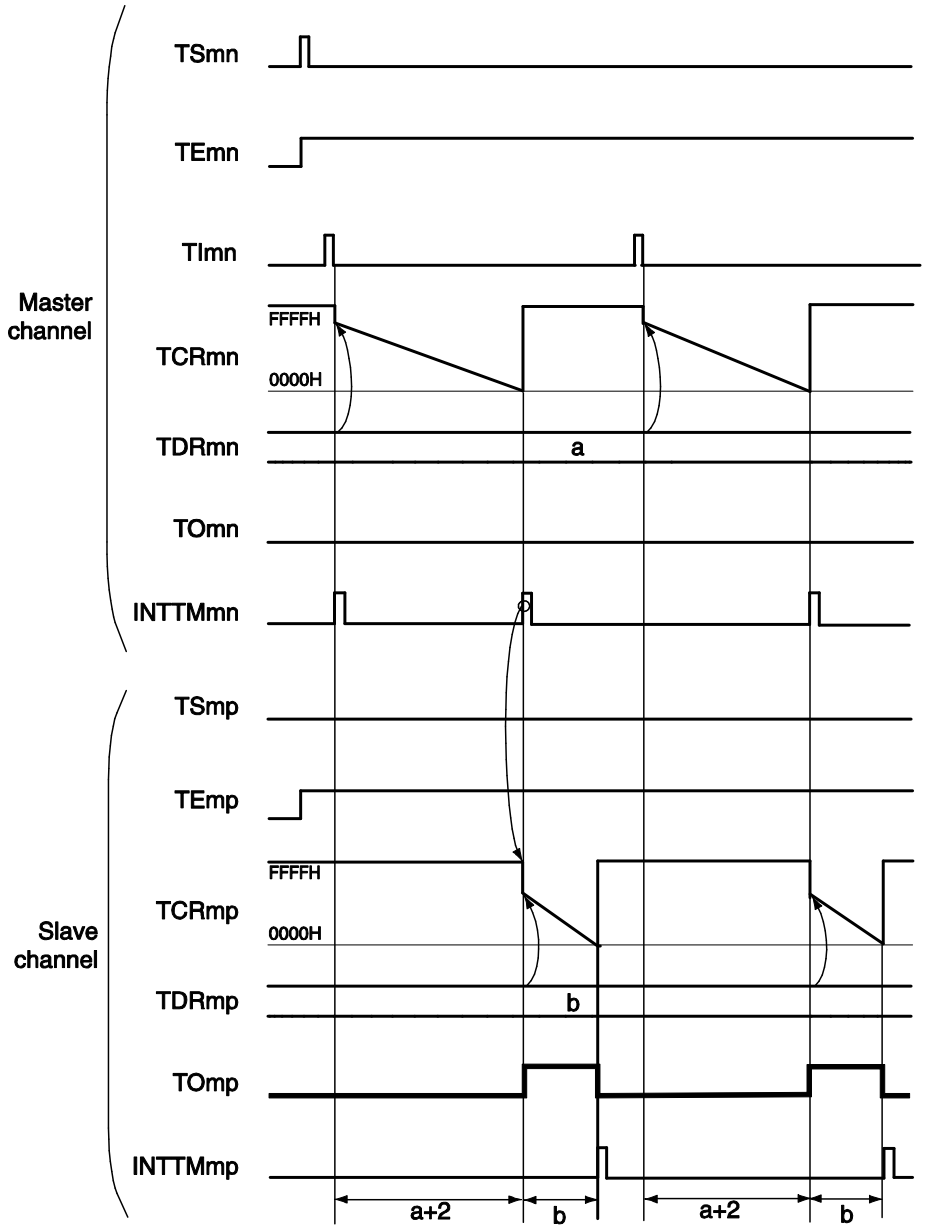

Remarks 1. m: Unit number (m = 0, 1), n: Master channel number (n = 0, 2, 4, 6)
p: Slave channel number (n < p ≤ 7)

2. TSmn, TSmp: Bit n, p of timer channel start register m (TSm)
TEmn, TEmp: Bit n, p of timer channel enable status register m (TEm)
TImn, TImp: TImn and TImp pins input signal
TCRmn, TCRmp: Timer count registers mn, mp (TCRmn, TCRmp)
TDRmn, TDRmp: Timer data registers mn, mp (TDRmn, TDRmp)
TOmn, TOmp: TOmn and TOmp pins output signal

3. Unit 1 is not provided in the Group A products.
Channels 7 to 4 of unit 1 are not provided in the Group B, C, and D products.

Figure 6-69. Example of Set Contents of Registers When One-Shot Pulse Output Function Is Used (Master Channel)

(a) Timer mode register mn (TMRmn)

	15	14	13	12	11	10	9	8	7	6	5	4	3	2	1	0
TMRmn	CKSmn1	CKSmn0		CCSmn	MAS TERmn	STSmn2	STSmn1	STSmn0	CISmn1	CISmn0			MDmn3	MDmn2	MDmn1	MDmn0
	1/0	1/0	0	0	1	0	0	1	1/0	1/0	0	0	1	0	0	0

Operation mode of channel n
100B: One-count mode

Start trigger during operation
0: Trigger input is invalid.

Selection of TImn pin input edge
00B: Detects falling edge.
01B: Detects rising edge.
10B: Detects both edges.
11B: Setting prohibited

Start trigger selection
001B: Selects the TImn pin input valid edge.

Slave/master selection
1: Master channel.

Count clock selection
0: Selects operation clock (f_{MCK}).

Operation clock (f_{MCK}) selection
00B: Selects CKm0 as operation clock of channel n.
01B: Selects CKm2 as operation clock of channel n.
10B: Selects CKm1 as operation clock of channel n.
11B: Selects CKm3 as operation clock of channel n.

(b) Timer output register m (TOm)

	Bit n
TOm	TOmn
	0

0: Outputs 0 from TOmn.

(c) Timer output enable register m (TOEm)

	Bit n
TOEm	TOEmn
	0

0: Stops the TOmn output operation by counting operation.

(d) Timer output level register m (TOLm)

	Bit n
TOLm	TOLmn
	0

0: Cleared to 0 when TOMmn = 0 (master channel output mode).

(e) Timer output mode register m (TOMm)

	Bit n
TOMm	TOMmn
	0

0: Sets master channel output mode.

Remarks 1. m: Unit number (m = 0, 1), n: Master channel number (n = 0, 2, 4, 6)

2. Unit 1 is not provided in the Group A products.
Channels 7 to 4 of unit 1 are not provided in the Group B, C, and D products.

Figure 6-70. Example of Set Contents of Registers When One-Shot Pulse Output Function Is Used (Slave Channel)

(a) Timer mode register mp (TMRmp)

	15	14	13	12	11	10	9	8	7	6	5	4	3	2	1	0
TMRmp	CKSmp1	CKSmp0		CCSmp	M/S Note	STSmp2	STSmp1	STSmp0	CISmp1	CISmp0			MDmp3	MDmp2	MDmp1	MDmp0
	1/0	0	0	0	0	1	0	0	0	0	0	0	1	0	0	0

Operation mode of channel p
100B: One-count mode

Start trigger during operation
0: Trigger input is invalid.

Selection of TImp pin input edge
00B: Sets 00B because these are not used.

Start trigger selection
100B: Selects INTTMmn of master channel.

Setting of MASTERmp, MASTERmq bits (channels 2, 4, 6)
0: Slave channel.

Setting of SPLITmp, SPLITmq bits (channels 1, 3)
0: 16-bit timer mode.

Count clock selection
0: Selects operation clock (f_{MCK}).

Operation clock (f_{MCK}) selection
00B: Selects CKm0 as operation clock of channel p.
01B: Selects CKm2 as operation clock of channel p.
10B: Selects CKm1 as operation clock of channel p.
11B: Selects CKm3 as operation clock of channel p.
* Make the same setting as master channel.

(b) Timer output register m (TOm)

	Bit p
TOm	TOmp
	1/0

0: Outputs 0 from TOmp.
1: Outputs 1 from TOmp.

(c) Timer output enable register m (TOEm)

	Bit p
TOEm	TOEmp
	1/0

0: Stops the TOmp output operation by counting operation.
1: Enables the TOmp output operation by counting operation.

(d) Timer output level register m (TOLm)

	Bit p
TOLm	TOLmp
	1/0

0: Positive logic output (active-high)
1: Negative logic output (active-low)

(e) Timer output mode register m (TOMm)

	Bit p
TOMm	TOMmp
	1

1: Sets the slave channel output mode.

Note TMRm2, TMRm4, TMRm6: MASTERmp bit
TMRm1, TMRm3: SPLITmp bit
TMRm5, TMRm7: Fixed to 0

Remarks 1. m: Unit number (m = 0, 1), n: Master channel number (n = 0, 2, 4, 6)
p: Slave channel number ($n < p \leq 7$)

2. Unit 1 is not provided in the Group A products.
Channels 7 to 4 of unit 1 are not provided in the Group B, C, and D products.

Figure 6-71. Operation Procedure of One-Shot Pulse Output Function (1/2)

	Software Operation	Hardware Status
TAU default setting		Power-off status (Clock supply is stopped and writing to each register is disabled.)
	Sets the TAUmEN bit of peripheral enable registers 0 (PER0) to 1. →	Power-on status. Each channel stops operating. (Clock supply is started and writing to each register is enabled.)
	Sets timer clock select register m (TPSm). Determines clock frequencies of CKm0 to CKm3.	
<R> Channel default setting	Sets the corresponding bit of the noise filter enable registers 1, 2 (NFEN1, NFEN2) to 0 (off) or 1 (on). Sets timer mode register mn, mp (TMRmn, TMRmp) of two channels to be used (determines operation mode of channels). An output delay is set to timer data register mn (TDRmn) of the master channel, and a pulse width is set to the TDRmp register of the slave channel.	Channel stops operating. (Clock is supplied and some power is consumed.)
	Sets slave channel. The TOMmp bit of timer output mode register m (TOMm) is set to 1 (slave channel output mode). Sets the TOLmp bit. Sets the TOmp bit and determines default level of the TOmp output. →	The TOmp pin goes into Hi-Z output state. The TOmp default setting level is output when the port mode register is in output mode and the port register is 0.
	Sets the TOEmp bit to 1 and enables operation of TOmp. →	TOmp does not change because channel stops operating.
	Clears the port register and port mode register to 0. →	The TOmp pin outputs the TOmp set level.

(**Remarks** are listed on the next page.)

Figure 6-71. Operation Procedure of One-Shot Pulse Output Function (2/2)

<R>

Operation is resumed.

	Software Operation	Hardware Status
Operation start	Sets the TOEmp bit (slave) to 1 (only when operation is resumed). The TSmn (master) and TSmp (slave) bits of timer channel start register m (TSm) are set to 1 at the same time. The TSmn and TSmp bits automatically return to 0 because they are trigger bits.	The TEmn and TEmp bits are set to 1 and the master channel enters the TImn input edge detection wait status. Counter stops operating.
	Detects the TImn pin input valid edge of master channel.	Master channel starts counting.
During operation	Set values of only the CISmn1 and CISmn0 bits of the TMRmn register can be changed. Set values of the TMRmp, TDRmn, TDRmp registers, TOMmn, TOMmp, TOLmn, and TOLmp bits cannot be changed. The TCRmn and TCRmp registers can always be read. The TSRmn and TSRmp registers are not used. Set values of the TOm and TOEm registers of slave channel can be changed.	Master channel loads the value of the TDRmn register to timer count register mn (TCRmn) when the TImn pin valid input edge is detected, and the counter starts counting down. When the count value reaches TCRmn = 0000H, the INTTMmn output is generated, and the counter stops until the next valid edge is input to the TImn pin. The slave channel, triggered by INTTMmn of the master channel, loads the value of the TDRmp register to the TCRmp register, and the counter starts counting down. The output level of TOmp becomes active one count clock after generation of INTTMmn from the master channel. It becomes inactive when TCRmp = 0000H, and the counting operation is stopped. After that, the above operation is repeated.
Operation stop	The TTmn (master) and TTmp (slave) bits are set to 1 at the same time. The TTmn and TTmp bits automatically return to 0 because they are trigger bits.	TEmn, TEmp = 0, and count operation stops. The TCRmn and TCRmp registers hold count value and stop. The TOmp output is not initialized but holds current status.
	The TOEmp bit of slave channel is cleared to 0 and value is set to the TOmp bit.	The TOmp pin outputs the TOmp set level.
TAU stop	To hold the TOmp pin output level Clears the TOmp bit to 0 after the value to be held is set to the port register. When holding the TOmp pin output level is not necessary Setting not required.	The TOmp pin output level is held by port function.
	The TAUmEN bit of the PER0 register is cleared to 0.	Power-off status All circuits are initialized and SFR of each channel is also initialized. (The TOmp bit is cleared to 0 and the TOmp pin is set to port mode.)

Remarks 1. m: Unit number (m = 0, 1), n: Master channel number (n = 0, 2, 4, 6)
p: Slave channel number ($n < p \leq 7$)

2. Unit 1 is not provided in the Group A products.
Channels 7 to 4 of unit 1 are not provided in the Group B, C, and D products.

6.8.2 Operation as PWM function

Two channels can be used as a set to generate a pulse of any period and duty factor.

The period and duty factor of the output pulse can be calculated by the following expressions.

Pulse period = {Set value of TDRmn (master) + 1} × Count clock period
Duty factor [%] = {Set value of TDRmp (slave)}/{Set value of TDRmn (master) + 1} × 100
0% output: Set value of TDRmp (slave) = 0000H
100% output: Set value of TDRmp (slave) ≥ {Set value of TDRmn (master) + 1}

Remark The duty factor exceeds 100% if the set value of TDRmp (slave) > (set value of TDRmn (master) + 1), it summarizes to 100% output.

The master channel operates in the interval timer mode. If the channel start trigger bit (TSmn) of timer channel start register m (TSm) is set to 1, an interrupt (INTTMmn) is output, the value set to timer data register mn (TDRmn) is loaded to timer count register mn (TCRmn), and the counter counts down in synchronization with the count clock. When the counter reaches 0000H, INTTMmn is output, the value of the TDRmn register is loaded again to the TCRmn register, and the counter counts down. This operation is repeated until the channel stop trigger bit (TTmn) of timer channel stop register m (TTm) is set to 1.

If two channels are used to output a PWM waveform, the period until the master channel counts down to 0000H is the PWM output (TOmp) cycle.

The slave channel operates in one-count mode. By using INTTMmn from the master channel as a start trigger, the TCRmp register loads the value of the TDRmp register and the counter counts down to 0000H. When the counter reaches 0000H, it outputs INTTMmp and waits until the next start trigger (INTTMmn from the master channel) is generated.

If two channels are used to output a PWM waveform, the period until the slave channel counts down to 0000H is the PWM output (TOmp) duty.

PWM output (TOmp) goes to the active level one clock after the master channel generates INTTMmn and goes to the inactive level when the TCRmp register of the slave channel becomes 0000H.

Caution To rewrite both timer data register mn (TDRmn) of the master channel and the TDRmp register of the slave channel, a write access is necessary two times. The timing at which the values of the TDRmn and TDRmp registers are loaded to the TCRmn and TCRmp registers is upon occurrence of INTTMmn of the master channel. Thus, when rewriting is performed split before and after occurrence of INTTMmn of the master channel, the TOmp pin cannot output the expected waveform. To rewrite both the TDRmn register of the master and the TDRmp register of the slave, therefore, be sure to rewrite both the registers immediately after INTTMmn is generated from the master channel.

Remarks 1. m: Unit number (m = 0, 1), n: Master channel number (n = 0, 2, 4, 6)
p: Slave channel number (n < p ≤ 7)

2. Unit 1 is not provided in the Group A products.
Channels 7 to 4 of unit 1 are not provided in the Group B, C, and D products.

Figure 6-72. Block Diagram of Operation as PWM Function

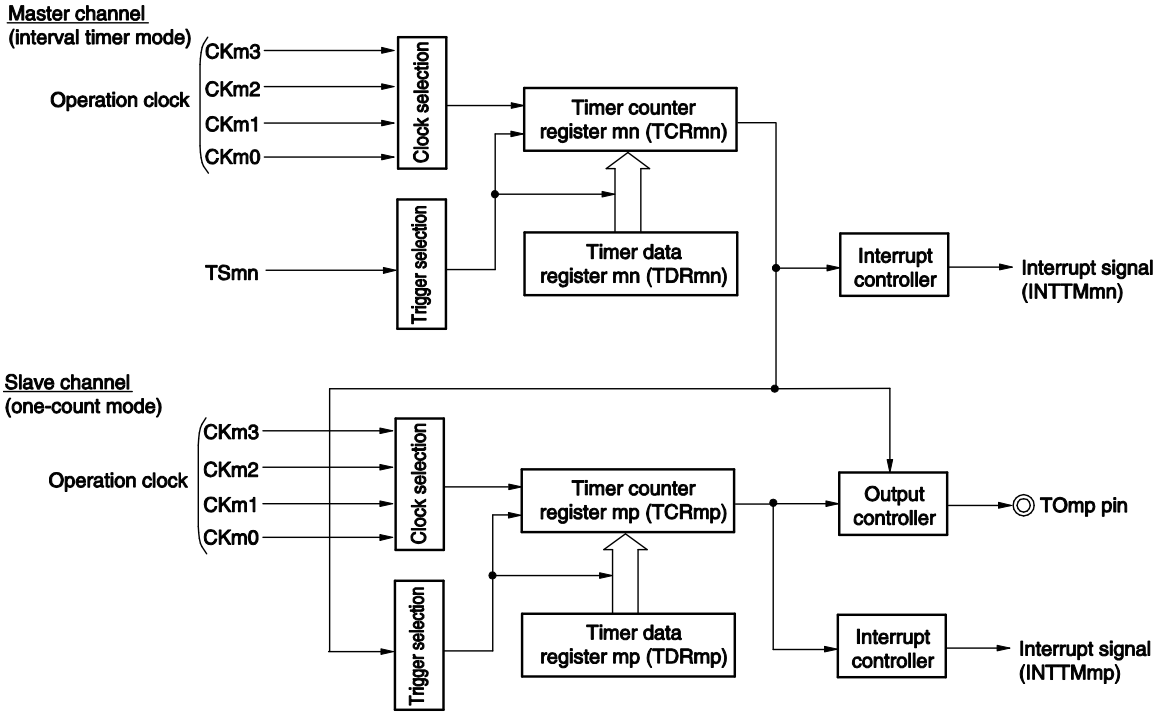

Remarks 1. m: Unit number (m = 0, 1), n: Master channel number (n = 0, 2, 4, 6)
p: Slave channel number (n < p ≤ 7)

2. Unit 1 is not provided in the Group A products.
Channels 7 to 4 of unit 1 are not provided in the Group B, C, and D products.

Figure 6-73. Example of Basic Timing of Operation as PWM Function

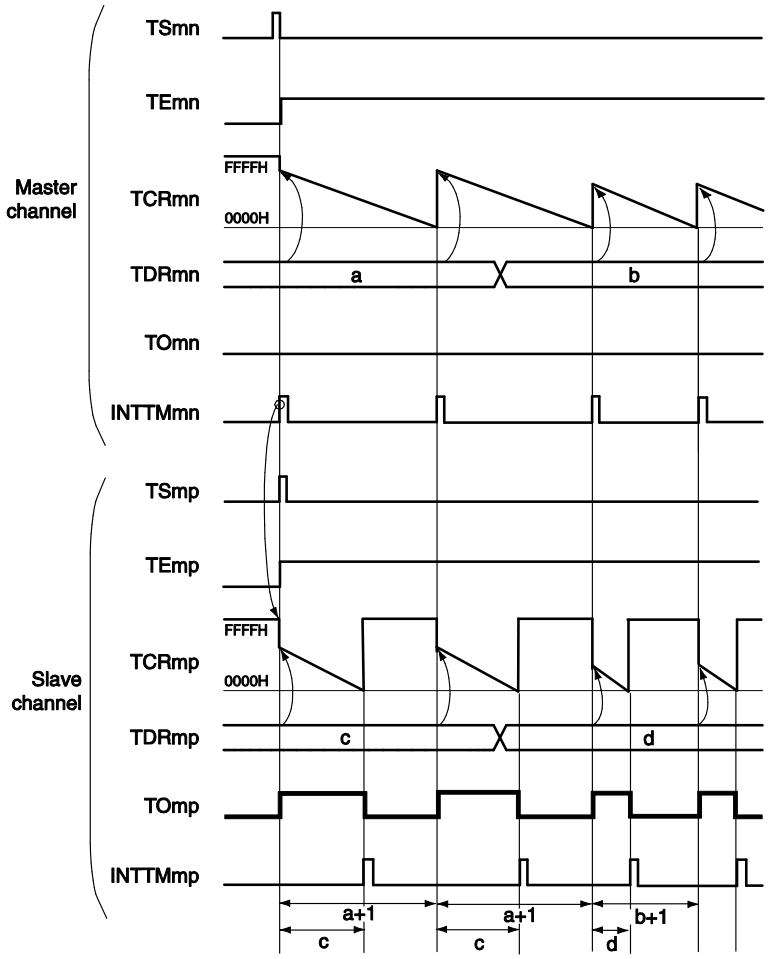

Remarks1. m: Unit number (m = 0, 1), n: Master channel number (n = 0, 2, 4 6)
p: Slave channel number (n < p ≤ 7)

2. TSmn, TSmp: Bit n, p of timer channel start register m (TSm)
TEmn, TEmp: Bit n, p of timer channel enable status register m (TEm)
TCRmn, TCRmp: Timer count registers mn, mp (TCRmn, TCRmp)
TDRmn, TDRmp: Timer data registers mn, mp (TDRmn, TDRmp)
TOmn, TOmp: TOmn and TOmp pins output signal

3. Unit 1 is not provided in the Group A products.
Channels 7 to 4 of unit 1 are not provided in the Group B, C, and D products.

Figure 6-74. Example of Set Contents of Registers When PWM Function (Master Channel) Is Used

(a) Timer mode register mn (TMRmn)

	15	14	13	12	11	10	9	8	7	6	5	4	3	2	1	0
TMRmn	CKSmn1	CKSmn0		CCSmn	MAS TERmn	STSmn2	STSmn1	STSmn0	CISmn1	CISmn0			MDmn3	MDmn2	MDmn1	MDmn0
	1/0	1/0	0	0	1	0	0	0	0	0	0	0	0	0	0	1

Operation mode of channel n
000B: Interval timer

Setting of operation when counting is started
1: Generates INTTMmn when counting is started.

Selection of TImn pin input edge
00B: Sets 00B because these are not used.

Start trigger selection
000B: Selects only software start.

Slave/master selection
1: Master channel.

Count clock selection
0: Selects operation clock (f_{MCK}).

Operation clock (f_{MCK}) selection
00B: Selects CKm0 as operation clock of channel n.
01B: Selects CKm2 as operation clock of channel n.
10B: Selects CKm1 as operation clock of channel n.
11B: Selects CKm3 as operation clock of channel n.

(b) Timer output register m (TOm)

	Bit n
TOm	TOmn
	0

0: Outputs 0 from TOmn.

(c) Timer output enable register m (TOEm)

	Bit n
TOEm	TOEmn
	0

0: Stops the TOmn output operation by counting operation.

(d) Timer output level register m (TOLm)

	Bit n
TOLm	TOLmn
	0

0: Cleared to 0 when TOMmn = 0 (master channel output mode).

(e) Timer output mode register m (TOMm)

	Bit n
TOMm	TOMmn
	0

0: Sets master channel output mode.

Remarks 1. m: Unit number (m = 0, 1), n: Master channel number (n = 0, 2, 4, 6)

2. Unit 1 is not provided in the Group A products.
Channels 7 to 4 of unit 1 are not provided in the Group B, C, and D products.

Figure 6-75. Example of Set Contents of Registers When PWM Function (Slave Channel) Is Used

(a) Timer mode register mp (TMRmp)

	15	14	13	12	11	10	9	8	7	6	5	4	3	2	1	0
TMRmp	CKSmp1	CKSmp0		CCSmp	M/S Note	STSmp2	STSmp1	STSmp0	CISmp1	CISmp0			MDmp3	MDmp2	MDmp1	MDmp0
	1/0	1/0	0	0	0	1	0	0	0	0	0	0	1	0	0	1

Operation mode of channel p
100B: One-count mode

Start trigger during operation
1: Trigger input is valid.

Selection of TImp pin input edge
00B: Sets 00B because these are not used.

Start trigger selection
100B: Selects INTTMmn of master channel.

Setting of MASTERmp or SPLITmp bit
0: Slave channel.

Count clock selection
0: Selects operation clock (f_{MCK}).

Operation clock (f_{MCK}) selection
00B: Selects CKm0 as operation clock of channel p.
01B: Selects CKm2 as operation clock of channel p.
10B: Selects CKm1 as operation clock of channel p.
11B: Selects CKm3 as operation clock of channel p.
* Make the same setting as master channel.

(b) Timer output register m (TOm)

	Bit p
TOm	TOmp
	1/0

0: Outputs 0 from TOmp.
1: Outputs 1 from TOmp.

(c) Timer output enable register m (TOEm)

	Bit p
TOEm	TOEmp
	1/0

0: Stops the TOmp output operation by counting operation.
1: Enables the TOmp output operation by counting operation.

(d) Timer output level register m (TOLm)

	Bit p
TOLm	TOLmp
	1/0

0: Positive logic output (active-high)
1: Negative logic output (active-low)

(e) Timer output mode register m (TOMm)

	Bit p
TOMm	TOMmp
	1

1: Sets the slave channel output mode.

Note TMRm5, TMRm7: Fixed to 0
TMRm1, TMRm3: SPLITmp bit

Remarks 1. m: Unit number (m = 0, 1), n: Master channel number (n = 0, 2, 4, 6)
p: Slave channel number ($n < p \leq 7$)

2. Unit 1 is not provided in the Group A products.
Channels 7 to 4 of unit 1 are not provided in the Group B, C, and D products.

Figure 6-76. Operation Procedure When PWM Function Is Used (1/2)

	Software Operation	Hardware Status
TAU default setting		Power-off status (Clock supply is stopped and writing to each register is disabled.)
	Sets the TAUmEN bit of peripheral enable register 0 (PER0) to 1. →	Power-on status. Each channel stops operating. (Clock supply is started and writing to each register is enabled.)
	Sets timer clock select register m (TPSm). Determines clock frequencies of CKm0 to CKm3.	
Channel default setting	Sets timer mode registers mn, mp (TMRmn, TMRmp) of two channels to be used (determines operation mode of channels). An interval (period) value is set to timer data register mn (TDRmn) of the master channel, and a duty factor is set to the TDRmp register of the slave channel.	Channel stops operating. (Clock is supplied and some power is consumed.)
	Sets slave channel. The TOMmp bit of timer output mode register m (TOMm) is set to 1 (slave channel output mode). Sets the TOLmp bit. Sets the TOmp bit and determines default level of the TOmp output. →	The TOmp pin goes into Hi-Z output state. The TOmp default setting level is output when the port mode register is in output mode and the port register is 0.
	Sets the TOEmp bit to 1 and enables operation of TOmp. →	TOmp does not change because channel stops operating.
	Clears the port register and port mode register to 0. →	The TOmp pin outputs the TOmp set level.

(**Remarks** are listed on the next page.)

Figure 6-76. Operation Procedure When PWM Function Is Used (2/2)

Operation is resumed.

	Software Operation	Hardware Status
Operation start	Sets the TOEmp bit (slave) to 1 (only when operation is resumed). The TSmn (master) and TSmp (slave) bits of timer channel start register m (TSm) are set to 1 at the same time. The TSmn and TSmp bits automatically return to 0 because they are trigger bits.	TEmn = 1, TEmp = 1 When the master channel starts counting, INTTMmn is generated. Triggered by this interrupt, the slave channel also starts counting.
During operation	Set values of the TMRmn and TMRmp registers, TOMmn, TOMmp, TOLmn, and TOLmp bits cannot be changed. Set values of the TDRmn and TDRmp registers can be changed after INTTMmn of the master channel is generated. The TCRmn and TCRmp registers can always be read. The TSRmn and TSRmp registers are not used.	The counter of the master channel loads the TDRmn register value to timer count register mn (TCRmn), and counts down. When the count value reaches TCRmn = 0000H, INTTMmn output is generated. At the same time, the value of the TDRmn register is loaded to the TCRmn register, and the counter starts counting down again. At the slave channel, the value of the TDRmp register is loaded to the TCRmp register, triggered by INTTMmn of the master channel, and the counter starts counting down. The output level of TOmp becomes active one count clock after generation of the INTTMmn output from the master channel. It becomes inactive when TCRmp = 0000H, and the counting operation is stopped. After that, the above operation is repeated.
Operation stop	The TTmn (master) and TTmp (slave) bits are set to 1 at the same time. The TTmn and TTmp bits automatically return to 0 because they are trigger bits.	TEmn, TEmp = 0, and count operation stops. The TCRmn and TCRmp registers hold count value and stop. The TOmp output is not initialized but holds current status.
	The TOEmp bit of slave channel is cleared to 0 and value is set to the TOmp bit.	The TOmp pin outputs the TOmp set level.
TAU stop	To hold the TOmp pin output level Clears the TOmp bit to 0 after the value to be held is set to the port register. When holding the TOmp pin output level is not necessary Setting not required.	The TOmp pin output level is held by port function.
	The TAUmEN bit of the PER0 register is cleared to 0.	Power-off status All circuits are initialized and SFR of each channel is also initialized. (The TOmp bit is cleared to 0 and the TOmp pin is set to port mode.)

Remarks 1. m: Unit number (m = 0, 1), n: Master channel number (n = 0, 2, 4, 6)
p: Slave channel number ($n < p \leq 7$)

2. Unit 1 is not provided in the Group A products.
Channels 7 to 4 of unit 1 are not provided in the Group B, C, and D products.

6.8.3 Operation as multiple PWM output function

By extending the PWM function and using multiple slave channels, many PWM waveforms with different duty values can be output.

For example, when using two slave channels, the period and duty factor of an output pulse can be calculated by the following expressions.

Pulse period = {Set value of TDRmn (master) + 1} × Count clock period
Duty factor 1 [%] = {Set value of TDRmp (slave 1)}/{Set value of TDRmn (master) + 1} × 100
Duty factor 2 [%] = {Set value of TDRmq (slave 2)}/{Set value of TDRmn (master) + 1} × 100

Remark Although the duty factor exceeds 100% if the set value of TDRmp (slave 1) > {set value of TDRmn (master) + 1} or if the {set value of TDRmq (slave 2)} > {set value of TDRmn (master) + 1}, it is summarized into 100% output.

Timer count register mn (TCRmn) of the master channel operates in the interval timer mode and counts the periods.

The TCRmp register of the slave channel 1 operates in one-count mode, counts the duty factor, and outputs a PWM waveform from the TOmp pin. The TCRmp register loads the value of timer data register mp (TDRmp), using INTTMmn of the master channel as a start trigger, and starts counting down. When TCRmp = 0000H, TCRmp outputs INTTMmp and stops counting until the next start trigger (INTTMmn of the master channel) has been input. The output level of TOmp becomes active one count clock after generation of INTTMmn from the master channel, and inactive when TCRmp = 0000H.

In the same way as the TCRmp register of the slave channel 1, the TCRmq register of the slave channel 2 operates in one-count mode, counts the duty factor, and outputs a PWM waveform from the TOmq pin. The TCRmq register loads the value of the TDRmq register, using INTTMmn of the master channel as a start trigger, and starts counting down. When TCRmq = 0000H, the TCRmq register outputs INTTMmq and stops counting until the next start trigger (INTTMmn of the master channel) has been input. The output level of TOmq becomes active one count clock after generation of INTTMmn from the master channel, and inactive when TCRmq = 0000H.

When channel 0 is used as the master channel as above, up to three types of PWM signals can be output at the same time.

Caution To rewrite both timer data register mn (TDRmn) of the master channel and the TDRmp register of the slave channel 1, write access is necessary at least twice. Since the values of the TDRmn and TDRmp registers are loaded to the TCRmn and TCRmp registers after INTTMmn is generated from the master channel, if rewriting is performed separately before and after generation of INTTMmn from the master channel, the TOmp pin cannot output the expected waveform. To rewrite both the TDRmn register of the master and the TDRmp register of the slave, be sure to rewrite both the registers immediately after INTTMmn is generated from the master channel (This applies also to the TDRmq register of the slave channel 2).

Remarks 1. m: Unit number (m = 0, 1), n: Master channel number (n = 0, 2, 4)
p: Slave channel number 1, q: Slave channel number 2
$n < p < q \leq 7$ (Where p and q are integers greater than n)

2. Unit 1 is not provided in the Group A products.
Channels 7 to 4 of unit 1 are not provided in the Group B, C, and D products.

Figure 6-77. Block Diagram of Operation as Multiple PWM Output Function (output two types of PWMs)

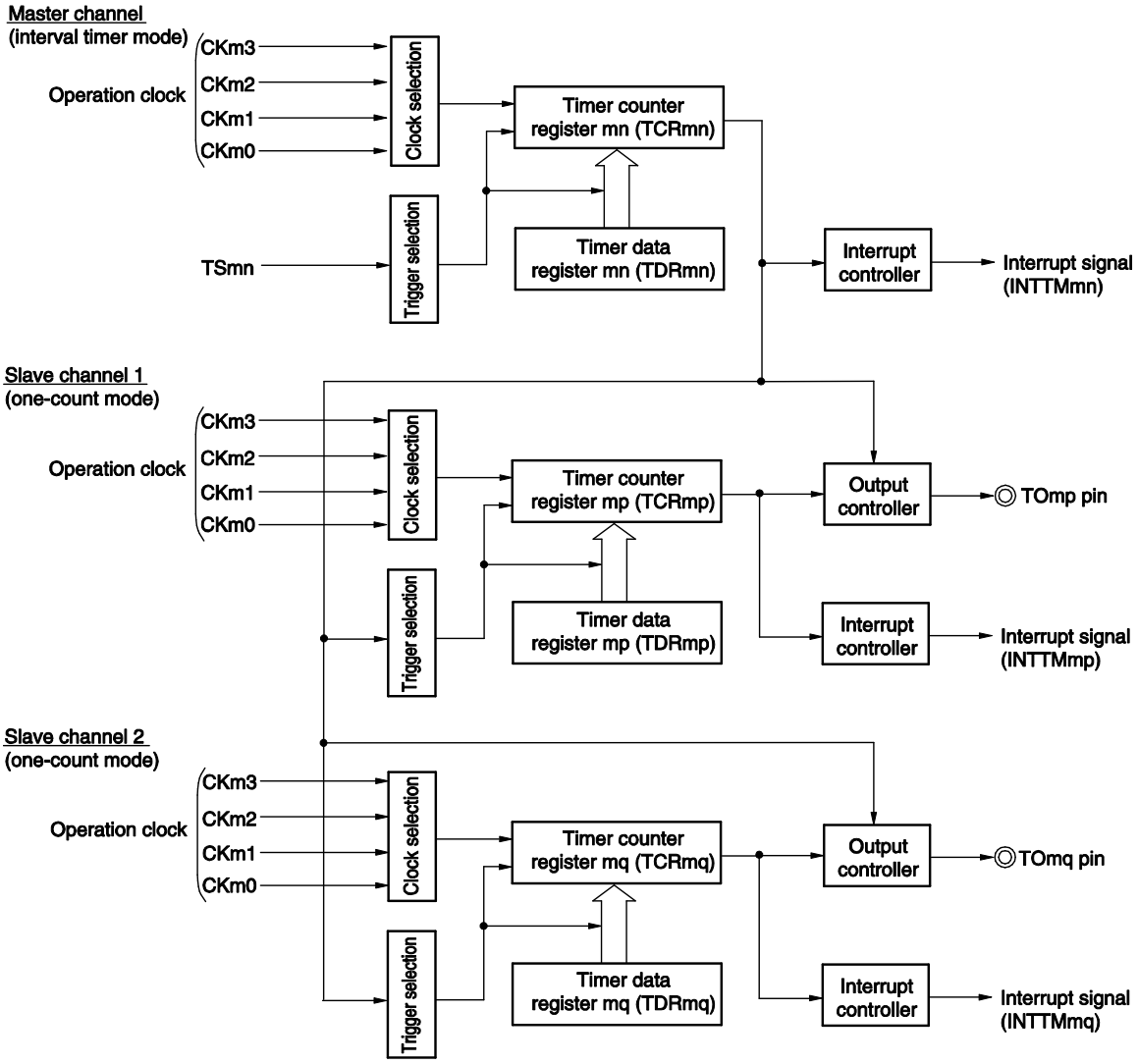

Remarks 1. m: Unit number (m = 0, 1), n: Master channel number (n = 0, 2, 4)
p: Slave channel number 1, q: Slave channel number 2
$n < p < q \leq 7$ (Where p and q are integers greater than n)

2. Unit 1 is not provided in the Group A products.
Channels 7 to 4 of unit 1 are not provided in the Group B, C, and D products.

Figure 6-78. Example of Basic Timing of Operation as Multiple PWM Output Function (Output two types of PWMs)

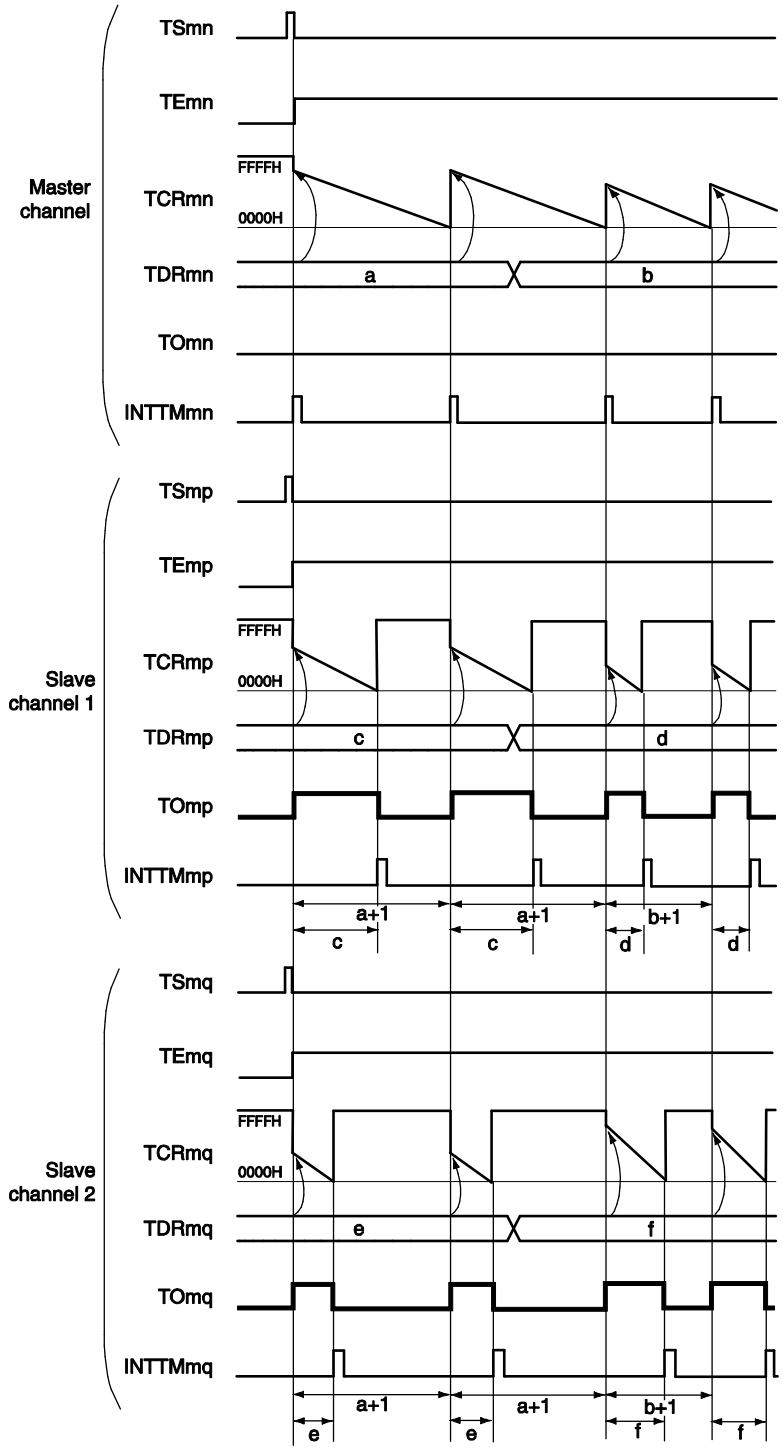

(**Remarks** are listed on the next page.)

Remarks 1. m: Unit number (m = 0, 1), n: Master channel number (n = 0, 2, 4)
p: Slave channel number 1, q: Slave channel number 2
$n < p < q \leq 7$ (Where p and q are integers greater than n)

2. TSmn, TSmp, TSmq: Bit n, p, q of timer channel start register m (TSm)
TEmn, TEmp, TEmq: Bit n, p, q of timer channel enable status register m (TEm)
TCRmn, TCRmp, TCRmq: Timer count registers mn, mp, mq (TCRmn, TCRmp, TCRmq)
TDRmn, TDRmp, TDRmq: Timer data registers mn, mp, mq (TDRmn, TDRmp, TDRmq)
TOmn, TOmp, TOmq: TOmn, TOmp, and TOmq pins output signal

3. Unit 1 is not provided in the Group A products.
Channels 7 to 4 of unit 1 are not provided in the Group B, C, and D products.

Figure 6-79. Example of Set Contents of Registers
When Multiple PWM Output Function (Master Channel) Is Used

(a) Timer mode register mn (TMRmn)

	15	14	13	12	11	10	9	8	7	6	5	4	3	2	1	0
TMRmn	CKSmn1	CKSmn0		CCSmn	MAS TERmn	STSmn2	STSmn1	STSmn0	CISmn1	CISmn0			MDmn3	MDmn2	MDmn1	MDmn0
	1/0	1/0	0	0	1	0	0	0	0	0	0	0	0	0	0	1

Operation mode of channel n
000B: Interval timer

Setting of operation when counting is started
1: Generates INTTMmn when counting is started.

Selection of TImn pin input edge
00B: Sets 00B because these are not used.

Start trigger selection
000B: Selects only software start.

Slave/master selection
1: Master channel.

Count clock selection
0: Selects operation clock (f_{MCK}).

Operation clock (f_{MCK}) selection
00B: Selects CKm0 as operation clock of channel n.
01B: Selects CKm2 as operation clock of channel n.
10B: Selects CKm1 as operation clock of channel n.
11B: Selects CKm3 as operation clock of channel n.

(b) Timer output register m (TOm)

	Bit n
TOm	TOmn
	0

0: Outputs 0 from TOmn.

(c) Timer output enable register m (TOEm)

	Bit n
TOEm	TOEmn
	0

0: Stops the TOmn output operation by counting operation.

(d) Timer output level register m (TOLm)

	Bit n
TOLm	TOLmn
	0

0: Cleared to 0 when TOMmn = 0 (master channel output mode).

(e) Timer output mode register m (TOMm)

	Bit n
TOMm	TOMmn
	0

0: Sets master channel output mode.

Remarks 1. m: Unit number (m = 0, 1), n: Master channel number (n = 0, 2, 4)
2. Unit 1 is not provided in the Group A products.
Channels 7 to 4 of unit 1 are not provided in the Group B, C, and D products.

Figure 6-80. Example of Set Contents of Registers
When Multiple PWM Output Function (Slave Channel) Is Used (output two types of PWMs)

(a) Timer mode register mp, mq (TMRmp, TMRmq)

	15	14	13	12	11	10	9	8	7	6	5	4	3	2	1	0
TMRmp	CKSmp1	CKSmp0		CCSmp	M/S Note	STSmp2	STSmp1	STSmp0	CISmp1	CISmp0			MDmp3	MDmp2	MDmp1	MDmp0
	1/0	1/0	0	0	0	1	0	0	0	0	0	0	1	0	0	1
TMRmq	CKSmq1	CKSmq0		CCSmq	M/S Note	STSmq2	STSmq1	STSmq0	CISmq1	CISmq0			MDmq3	MDmq2	MDmq1	MDmq0
	1/0	1/0	0	0	0	1	0	0	0	0	0	0	1	0	0	1

Operation mode of channel p, q
100B: One-count mode

Start trigger during operation
1: Trigger input is valid.

Selection of TImp and TImq pins input edge
00B: Sets 00B because these are not used.

Start trigger selection
100B: Selects INTTMmn of master channel.

Setting of MASTERmp, MASTERmq bits (channels 2, 4, 6)
0: Slave channel.

Setting of SPLITmp, SPLITmq bits (channels 1, 3)
0: 16-bit timer mode.

Count clock selection
0: Selects operation clock (f_{MCK}).

Operation clock (f_{MCK}) selection
00B: Selects CKm0 as operation clock of channel p, q.
01B: Selects CKm2 as operation clock of channel p, q.
10B: Selects CKm1 as operation clock of channel p, q.
11B: Selects CKm3 as operation clock of channel p, q.
* Make the same setting as master channel.

(b) Timer output register m (TOm)

	Bit q	Bit p
TOm	TOmq	TOmp
	1/0	1/0

0: Outputs 0 from TOmp or TOmq.
1: Outputs 1 from TOmp or TOmq.

(c) Timer output enable register m (TOEm)

	Bit q	Bit p
TOEm	TOEmq	TOEmp
	1/0	1/0

0: Stops the TOmp or TOmq output operation by counting operation.
1: Enables the TOmp or TOmq output operation by counting operation.

(d) Timer output level register m (TOLm)

	Bit q	Bit p
TOLm	TOLmq	TOLmp
	1/0	1/0

0: Positive logic output (active-high)
1: Negative logic output (active-low)

(e) Timer output mode register m (TOMm)

	Bit q	Bit p
TOMm	TOMmq	TOMmp
	1	1

1: Sets the slave channel output mode.

Note TMRm5, TMRm7: Fixed to 0
TMRm1, TMRm3: SPLITmp, SPLITmq bit

Remarks 1. m: Unit number (m = 0, 1), n: Master channel number (n = 0, 2, 4)
p: Slave channel number 1, q: Slave channel number 2
$n < p < q \leq 7$ (Where p and q are integers greater than n)

2. Unit 1 is not provided in the Group A products.
Channels 7 to 4 of unit 1 are not provided in the Group B, C, and D products.

Figure 6-81. Operation Procedure When Multiple PWM Output Function Is Used (output two types of PWMs) (1/2)

	Software Operation	Hardware Status
TAU default setting		Power-off status (Clock supply is stopped and writing to each register is disabled.)
	Sets the TAUmEN bit of peripheral enable register 0 (PER0) to 1. →	Power-on status. Each channel stops operating. (Clock supply is started and writing to each register is enabled.)
	Sets timer clock select register m (TPSm). Determines clock frequencies of CKm0 to CKm3.	
Channel default setting	Sets timer mode registers mn, mp, mq (TMRmn, TMRmp, TMRmq) of each channel to be used (determines operation mode of channels). An interval (period) value is set to timer data register mn (TDRmn) of the master channel, and a duty factor is set to the TDRmp and TDRmq registers of the slave channels.	Channel stops operating. (Clock is supplied and some power is consumed.)
	Sets slave channels. The TOMmp and TOMmq bits of timer output mode register m (TOMm) are set to 1 (slave channel output mode). Clears the TOLmp and TOLmq bits to 0. Sets the TOmp and TOmq bits and determines default level of the TOmp and TOmq outputs. →	The TOmp and TOmq pins go into Hi-Z output state. The TOmp and TOmq default setting levels are output when the port mode register is in output mode and the port register is 0.
	Sets the TOEmp and TOEmq bits to 1 and enables operation of TOmp and TOmq. →	TOmp and TOmq do not change because channels stop operating.
	Clears the port register and port mode register to 0. →	The TOmp and TOmq pins output the TOmp and TOmq set levels.

(**Remarks** are listed on the next page.)

Figure 6-81. Operation Procedure When Multiple PWM Output Function Is Used (output two types of PWMs) (2/2)

Operation is resumed.

	Software Operation	Hardware Status
Operation start	(Sets the TOEmp and TOEmq (slave) bits to 1 only when resuming operation.) The TSmn bit (master), and TSmp and TSmq (slave) bits of timer channel start register m (TSm) are set to 1 at the same time. The TSmn, TSmp, and TSmq bits automatically return to 0 because they are trigger bits.	TEmn = 1, TEmp, TEmq = 1 When the master channel starts counting, INTTMmn is generated. Triggered by this interrupt, the slave channel also starts counting.
During operation	Set values of the TMRmn, TMRmp, TMRmq registers, TOMmn, TOMmp, TOMmq, TOLmn, TOLmp, and TOLmq bits cannot be changed. Set values of the TDRmn, TDRmp, and TDRmq registers can be changed after INTTMmn of the master channel is generated. The TCRmn, TCRmp, and TCRmq registers can always be read. The TSRmn, TSRmp, and TSRmq registers are not used.	The counter of the master channel loads the TDRmn register value to timer count register mn (TCRmn) and counts down. When the count value reaches TCRmn = 0000H, INTTMmn output is generated. At the same time, the value of the TDRmn register is loaded to the TCRmn register, and the counter starts counting down again. At the slave channel 1, the values of the TDRmp register are transferred to the TCRmp register, triggered by INTTMmn of the master channel, and the counter starts counting down. The output levels of TOmp become active one count clock after generation of the INTTMmn output from the master channel. It becomes inactive when TCRmp = 0000H, and the counting operation is stopped. At the slave channel 2, the values of the TDRmq register are transferred to TCRmq register, triggered by INTTMmn of the master channel, and the counter starts counting down. The output levels of TOmq become active one count clock after generation of the INTTMmn output from the master channel. It becomes inactive when TCRmq = 0000H, and the counting operation is stopped. After that, the above operation is repeated.
Operation stop	The TTmn bit (master), TTmp, and TTmq (slave) bits are set to 1 at the same time. The TTmn, TTmp, and TTmq bits automatically return to 0 because they are trigger bits.	TEmn, TEmp, TEmq = 0, and count operation stops. The TCRmn, TCRmp, and TCRmq registers hold count value and stop. The TOmp and TOmq output are not initialized but hold current status.
	The TOEmp and TOEmq bits of slave channels are cleared to 0 and value is set to the TOmp and TOmq bits.	The TOmp and TOmq pins output the TOmp and TOmq set levels.
TAU stop	To hold the TOmp and TOmq pin output levels Clears the TOmp and TOmq bits to 0 after the value to be held is set to the port register. When holding the TOmp and TOmq pin output levels are not necessary Setting not required	The TOmp and TOmq pin output levels are held by port function.
	The TAUmEN bit of the PER0 register is cleared to 0.	Power-off status All circuits are initialized and SFR of each channel is also initialized. (The TOmp and TOmq bits are cleared to 0 and the TOmp and TOmq pins are set to port mode.)

Remarks 1. m: Unit number (m = 0, 1), n: Master channel number (n = 0, 2, 4)
p: Slave channel number 1, q: Slave channel number 2
$n < p < q \leq 7$ (Where p and q are a consecutive integer greater than n)

2. Unit 1 is not provided in the Group A products.
Channels 7 to 4 of unit 1 are not provided in the Group B, C, and D products.

6.9 Cautions When Using Timer Array Unit

6.9.1 Cautions When Using Timer output

<R> (1) When the fCLK (not divided) is selected as the operating clock for the timer array unit and TDRnm (n = 0, 1; m = 0 to 7) are set to 0000H, an interrupt signal from the timer array unit is fixed to high, and an interrupt request cannot be detected.
To use this setting, the interrupt function should be masked.

(2) Do not change the input source for the timer set by the TIS0, TIS1, and TIS2 registers while the timer operates.

CHAPTER 7 TIMER RJ

Timer RJ is a 16-bit timer that can be used for pulse output, external pulse width or period measurement, and counting external events.

7.1 Overview

This 16-bit timer consists of a reload register and a down counter. The reload register and the down counter are allocated to the same address, and they can be accessed by accessing the TRJ0 register.

Table 7-1 lists the Timer RJ Specifications. Figure 7-1 shows the Timer RJ Block Diagram.

Table 7-1. Timer RJ Specifications

Item		Description
Operating modes	Timer mode	The count source is counted.
	Pulse output mode Note	The count source is counted and the output is inverted at each underflow of the timer.
	Event counter mode Note	An external event is counted. Operation is possible in STOP mode.
	Pulse width measurement mode Note	An external pulse width is measured.
	Pulse period measurement mode Note	An external pulse period is measured.
Count source (Operating clock)		f_{CLK}, $f_{CLK}/2$, $f_{CLK}/8$, f_{IL}, f_{SL}, or event input from the event link controller (ELC) selectable
Interrupt		• When the counter underflows. • When the measurement of the active width of the external input (TRJIO0) is completed in pulse width measurement mode. • When the set edge of the external input (TRJIO0) is input in pulse period measurement mode.
Selectable functions		• Coordination with the event link controller (ELC). Event input from the ELC is selectable as a count source.

Note The 20-pin products do not have TRJIO0 and TRJO0 pins. Thus, the pulse output mode, event counter mode, pulse width measurement mode, and pulse period measurement mode cannot be used.

Figure 7-1. Timer RJ Block Diagram

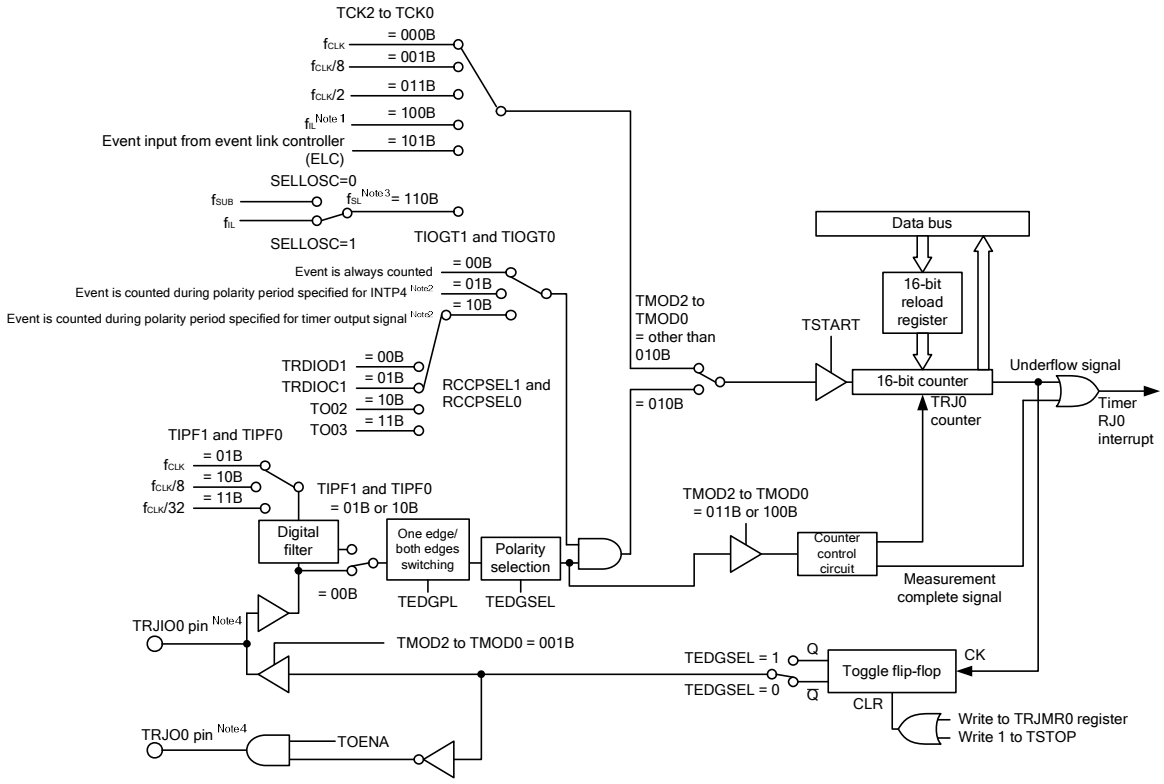

TSTART, TSTOP: Bits in TRJCR0 register
TEDGSEL, TOENA, TIPF0, TIPF1, TIOGT0, TIOGT1: Bits in TRJIOC0 register
TMOD0 to TMOD2, TEDGPL, TCK0 to TCK2: Bits in TRJMR0 register
RCCPSEL0, RCCPSEL1: Bits in TRJISR0 register
SELLOSC: Bit in CKSEL register

Notes 1. When selecting f_{IL} as the count source, set the WUTMMCK0 bit in the operation speed mode control register (OSMC) to 1.

2. The polarity can be selected by the RCCPSEL2 bit in the TRJISR0 register.

3. f_{SUB} cannot be selected as the count source for timer RJ when f_{SL} (f_{IL}) is selected as the count source for timer RD or the output clock for clock output/buzzer output.

4. The 20-pin products do not have TRJIO0 and TRJO0 pins.

7.2 I/O Pins

Table 7-2 lists the Timer RJ Pin Configuration.

Table 7-2. Timer RJ Pin Configuration

Pin Name	I/O	Function
INTP4	Input	External input for timer RJ
TRJIO0 **Note**	Input/output	External event input and pulse output for timer RJ
TRJO0 **Note**	Output	Pulse output for timer RJ

Note The 20-pin products do not have TRJIO0 and TRJO0 pins.

7.3 Registers

Table 7-3 lists the Timer RJ Register Configuration.

Table 7-3. Timer RJ Register Configuration

Register Name	Symbol	After Reset	Address	Access Size
Peripheral Enable Register 1	PER1	00H	F02C0H	1, 8
Operation speed mode control register	OSMC	00H	F00F3H	8
Clock select register	CKSEL	00H	F02C4H	1, 8
Timer RJ Counter Register 0 Note 1	TRJ0	FFFFH	F06F0H	16
Timer RJ Control Register 0	TRJCR0	00H	F0240H	8
Timer RJ I/O Control Register 0 Note 2	TRJIOC0	00H	F0241H	1, 8
<R> Timer RJ Mode Register 0	TRJMR0	00H	F0242H	1, 8
<R> Timer RJ Event Pin Select Register 0 Note 2	TRJISR0	00H	F0243H	1, 8
Port Register 1	P1	00H	FFF01H	8
Port Register 4	P4	00H	FFF04H	8
Port Mode Register 1	PM1	FFH	FFF21H	8
Port Mode Register 4	PM4	FFH	FFF24H	8

Notes 1. When the TRJ0 register is accessed, the CPU does not proceed to the next instruction processing but enters the wait state for CPU processing. For this reason, if this wait state occurs, the number of instruction execution clocks is increased by the number of wait clocks. The number of wait clocks for access to the TRJ0 register is one clock for both writing and reading.

2. The 20-pin products do not have the timer RJ I/O control register 0 (TRJIOC0) and timer RJ event pin select register 0 (TRJISR0).

7.3.1 Peripheral enable register 1 (PER1)

The PER1 register is used to enable or disable supplying the clock to the peripheral hardware. Clock supply to the hardware that is not used is also stopped so as to decrease the power consumption and noise.

To use Timer RJ, be sure to set bit 0 (TRJ0EN) to 1.

Set the PER1 register by a 1-bit or 8-bit memory manipulation instruction.

Reset signal generation clears this register to 00H.

Figure 7-2. Format of Peripheral Enable Register 1 (PER1)

Address: F02C0H After reset: 00H R/W

Symbol	<7>	<6>	<5>	<4>	<3>	2	1	<0>
PER1	DACEN[Note]	0	CMPEN[Note]	TRD0EN	DTCEN	0	0	TRJ0EN

TRJ0EN	Control of timer RJ0 input clock supply
0	Stops input clock supply. • SFR used by timer RJ0 cannot be written. • Timer RJ0 is in the reset status.
1	Enables input clock supply. • SFR used by timer RJ0 can be read and written.

Note Only on the RL78/F14.

Cautions 1. When setting timer RJ, be sure to set the TRJ0EN bit to 1 first. If TRJ0EN = 0, writing to a control register of timer RJ is ignored, and all read values are default values (except for port mode registers 1, 4 (PM1, PM4) and port registers 1, 4 (P1, P4)).

2. Be sure to set the following bits to 0:
RL78/F13: bits 1, 2, 5, 6, and 7
RL78/F14: bits 1, 2, and 6

7.3.2 Operation speed mode control register (OSMC)

The low-speed on-chip oscillator can be operated by setting the WUTMMCK0 bit in the OSMC register.

To select the low-speed on-chip oscillator as the count source of the timer RJ, set the bits TCK2 to TCK0 in the timer RJ mode register 0 (TRJMR0).

The RTCLPC bit is used to reduce power consumption by stopping unnecessary clock functions.

For the setting of the RTCLPC bit, see **CHAPTER 5 CLOCK GENERATOR**.

Set the OSMC register by an 8-bit memory manipulation instruction.

Reset signal generation clears this register to 00H.

Figure 7-3. Format of Operation Speed Mode Control Register (OSMC)

Address: F00F3H After reset: 00H R/W

Symbol	7	6	5	4	3	2	1	0
OSMC	RTCLPC	0	0	WUTMMCK0	0	0	0	0

WUTMMCK0	Low-speed on-chip oscillator operation control
0	Low-speed on-chip oscillator stopped.
1	Low-speed on-chip oscillator operating.

7.3.3 Clock Select Register (CKSEL)

This register is used to select the CPU clock (f_{SUB}/f_{IL}) the clocks for the timer RJ, timer RD, and clock output/buzzer output. Together with the CMC register, the SELLOSC bit is used to set the operation mode of the subsystem clock.

For details, see **Figure 5-3 Format of Clock Operation Mode Control Register (CMC)**.

Set the CKSEL register by a 1-bit or 8-bit memory manipulation instruction.

Writing to the CKSEL register is disabled when the GCSC bit of the IAWCTL register is set to 1.

Figure 7-4. Format of Clock Select Register (CKSEL)

Address: F02C4H After reset: 00H R/W

Symbol	7	6	5	4	3	<2>	1	<0>
CKSEL	0	0	0	0	0	TRD_CKSEL	0	SELLOSC Notes 3, 4

SELLOSC Notes 3, 4	Control of sub/low-speed on-chip oscillator selection clock (f_{SL}) selection
0	Selects f_{SUB} Note 1
1	Selects f_{IL} Note 2

Notes 1. When setting f_{SUB} as the CPU/peripheral hardware clock, first set the SELLOSC bit to 0 and then set the CSS bit in the CKC register to 1.

2. When setting f_{IL} as the CPU/peripheral hardware clock, first set the SELLOSC bit to 1 and then set the CSS bit in the CKC register to 1.

3. When the SELLOSC bit is set to 1, the low-speed on-chip oscillator operates.

4. When setting the CKSEL register in the 20-, 30-, or 32-pin products, set the SELLOSC bit to 1.

7.3.4 Timer RJ Counter Register 0 (TRJ0), Timer RJ Reload Register

TRJ0 is a 16-bit register. The write value is written to the reload register and the read value is read from the counter.

The states of the reload register and the counter are changed depending on the TSTART bit in the TRJCR0 register. For details, see **7. 4. 1 Reload Register and Counter Rewrite Operation**.

Figure 7-5. Format of Timer RJ Counter Register 0 (TRJ0), Timer RJ Reload Register

Address : F06F0H After Reset: FFFFH

Symbol	15	14	13	12	11	10	9	8	7	6	5	4	3	2	1	0
TRJ0	–	–	–	–	–	–	–	–	–	–	–	–	–	–	–	–

—	Function	Setting Range	R/W
Bits 15 to 0	16-bit counter and reload register Notes 1, 2, 3	0000H to FFFFH	R/W

Notes 1. When 1 is written to the TSTOP bit in the TRJCR0 register, the 16-bit counter is forcibly stopped and set to FFFFH.

2. The TRJ0 register must be accessed in 16-bit units. Do not access this register in 8-bit units.

3. When the setting of bits TCK2 to TCK0 in the TRJMR0 register is other than 001B ($f_{CLK}/8$) or 011B ($f_{CLK}/2$), if the TRJ0 register is set to 0000H, a request signal to the data transfer controller (DTC) and the event link controller (ELC) is generated only once immediately after the count starts. However, the TRJO0 and TRJIO0 output is toggled.

When the TRJ0 register is set to 0000H in event counter mode, regardless of the value of bits TCK2 to TCK0, a request signal to the DTC, ELC, and interrupt functions is generated only once immediately after the count starts. In addition, the TRJO0 output is toggled even during a period other than the specified count period.

When the TRJ0 register is set to 0000H or a higher value, a request signal is generated each time TRJ underflows.

Caution When the TRJ0 register is accessed, the CPU does not proceed to the next instruction processing but enters the wait state for CPU processing. For this reason, if this wait state occurs, the number of instruction execution clocks is increased by the number of wait clocks. The number of wait clocks for access to the TRJ0 register is one clock for both writing and reading.

7.3.5 Timer RJ Control Register 0 (TRJCR0)

<R> The TRJCR0 register is used to start or stop count operation and indicates the status of timer RJ.
The TRJCR0 register needs to be set by an 8-bit memory manipulation instruction.
Reset signal generation clears this register to 00H.

Figure 7-6. Format of Timer RJ Control Register 0 (TRJCR0)

Address : F0240H After Reset: 00H

Symbol	7	6	5	4	3	2	1	0
TRJCR0	—	—	TUNDF	TEDGF	—	TSTOP	TCSTF	TSTART

Bits 7 to 6	Nothing is assigned	R/W
—	The write value must be 0. The read value is 0.	R

TUNDF	Timer RJ underflow flag Note 1	R/W
0	No underflow	R/W
1	Underflow	

[Condition for setting to 0]
• When 0 is written to this bit by a program.
[Condition for setting to 1]
• When the counter underflows.

TEDGF	Active edge judgement flag Notes 1, 2	R/W
0	No active edge received	R/W
1	Active edge received	

[Condition for setting to 0]
• When 0 is written to this bit by a program.
[Conditions for setting to 1]
• When the measurement of the active width of the external input (TRJIO0) is completed in pulse width measurement mode.
• The set edge of the external input (TRJIO0) is input in pulse period measurement mode.

Bit 3	Nothing is assigned	R/W
—	The write value must be 0. The read value is 0.	R

TSTOP	Timer RJ count forced stop Note 3	R/W
When 1 is written to this bit, the count is forcibly stopped. The read value is 0.		W

TCSTF	Timer RJ count status flag Note 4	R/W
0	Count stops	R
1	Count in progress	

[Conditions for setting to 0]
• When 0 is written to the TSTART bit (the TCSTF bit is set to 0 in synchronization with the count source).
• When 1 is written to the TSTOP bit.
[Condition for setting to 1]
• When 1 is written to the TSTART bit (the TCSTF bit is set to 1 in synchronization with the count source).

(Notes are listed on the next page.)

TSTART	Timer RJ count start Note 4	R/W
0	Count stops	R/W
1	Count starts	
Count operation is started by writing 1 to the TSTART bit and stopped by writing 0. When the TSTART bit is set to 1 (count starts), the TCSTF bit is set to 1 (count in progress) in synchronization with the count source. Also, after 0 is written to the TSTART bit, the TCSTF bit is set to 0 (count stops) in synchronization with the count source. For details, see **7. 5. 1 Count Operation Start and Stop Control.**		

Notes 1. Set the TRJCR0 register by an 8-bit memory manipulation instruction.

2. The 20-pin products do not have the active edge judgement flag.

3. When 1 (count is forcibly stopped) is written to the TSTOP bit, bits TSTART and TCSTF are initialized at the same time. The pulse output level is also initialized.

4. For notes on using bits TSTART and TCSTF, see **7. 5. 1 Count Operation Start and Stop Control.**

7.3.6 Timer RJ I/O Control Register 0 (TRJIOC0)

<R> The TRJIOC0 register is used to the input/output of timer RJ.

The TRJIOC0 register needs to be set by a 1-bit or 8-bit memory manipulation instruction.

Reset signal generation clears this register to 00H.

Figure 7-7. Format of Timer RJ I/O Control Register 0 (TRJIOC0)

Address : F0241H After Reset: 00H

Symbol	7	6	5	4	3	2	1	0
TRJIOC0	TIOGT1	TIOGT0	TIPF1	TIPF0	—	TOENA	—	TEDGSEL

TIOGT1	TIOGT0	TRJIO0 count control Notes 1, 2	R/W
0	0	Event is always counted	R/W
0	1	Event is counted during polarity period specified for INTP4	
1	0	Event is counted during polarity period specified for timer output signal	
1	1	Do not set.	

Notes 1. When INTP4 or the timer output signal is used, the polarity to count an event can be selected by the RCCPSEL2 bit in the TRJISR0 register.

2. Bits TIOGT0 and TIOGT1 are enabled only in event counter mode.

TIPF1	TIPF0	TRJIO0 input filter select	R/W
0	0	No filter	R/W
0	1	Filter sampled at f_{CLK}	
1	0	Filter sampled at $f_{CLK}/8$	
1	1	Filter sampled at $f_{CLK}/32$	
These bits are used to specify the sampling frequency of the filter for the TRJIO0 input. If the input to the TRJIO0 pin is sampled and the value matches three successive times, that value is taken as the input value.			

Bit 3	Nothing is assigned	R/W
—	The write value must be 0. The read value is 0.	R

TOENA	TRJO0 output enable	R/W
0	TRJO0 output disabled (port)	R/W
1	TRJO0 output enabled	

Bit 1	Nothing is assigned	R/W
—	The write value must be 0. The read value is 0.	R

TEDGSEL	I/O polarity switch	R/W
Function varies depending on the operating mode (see **Table 7-4** and **Table 7-5**). The TEDGSEL bit is used to switch the TRJO0 output polarity and the TRJIO0 I/O edge and polarity. In pulse output mode, only the inversion/non-inversion of toggle flip-flop is controlled. The toggle flip-flop is initialized when the TRJMR0 register is written or 1 is written to the TSTOP bit in the TRJCR0 register.		R/W

Caution The 20-pin products do not have the timer RJ I/O control register 0 (TRJIOC0).

Table 7-4. TRJIO0 I/O Edge and Polarity Switching

Operating Mode	Function
Timer mode	Not used (I/O port)
Pulse output mode	0: Output is started at high (Initialization level: High) 1: Output is started at low (Initialization level: Low)
Event counter mode	0: Count at rising edge 1: Count at falling edge
Pulse width measurement mode	0: Low-level width is measured 1: High-level width is measured
Pulse period measurement mode	0: Measure from one rising edge to the next rising edge 1: Measure from one falling edge to the next falling edge

Table 7-5. TRJO0 Output Polarity Switching

Operating Mode	Function
All modes	0: Output is started at low (Initialization level: Low) 1: Output is started at high (Initialization level: High)

7.3.7 Timer RJ Mode Register 0 (TRJMR0)

<R> The TRJMR0 register is used to the operating mode of timer RJ.

The TRJMR0 register needs to be set by a 1-bit or 8-bit memory manipulation instruction.

Reset signal generation clears this register to 00H.

Figure 7-8. Format of Timer RJ Mode Register 0 (TRJMR0)

Address : F0242H After Reset: 00H

Symbol	7	6	5	4	3	2	1	0
TRJMR0	—	TCK2	TCK1	TCK0	TEDGPL	TMOD2	TMOD1	TMOD0

Bit 7	Nothing is assigned	R/W
—	The write value must be 0. The read value is 0.	R

TCK2	TCK1	TCK0	Timer RJ count source select Notes 1, 2	R/W
0	0	0	f_{CLK}	R/W
0	0	1	$f_{CLK}/8$	
0	1	1	$f_{CLK}/2$	
1	0	0	f_{IL} Note 4	
1	0	1	Event input from event link controller (ELC) Note 5	
1	1	0	f_{SL}	
Other than above			Setting prohibited	

TEDGPL	TRJIO0 edge polarity select Note 6	R/W
0	One edge	R/W
1	Both edges	

TMOD2	TMOD1	TMOD0	Timer RJ operating mode select Note 3	R/W
0	0	0	Timer mode	R/W
0	0	1	Pulse output mode Note 7	
0	1	0	Event counter mode Note 7	
0	1	1	Pulse width measurement mode Note 7	
1	0	0	Pulse period measurement mode Note 7	
Other than above			Setting prohibited	

Notes 1. When event counter mode is selected, the external input (TRJIO0) is selected as the count source regardless of the setting of bits TCK0 to TCK2.

2. Do not switch count sources during count operation. When switching count sources, set the TSTART and TCSTF bits in the TRJCR0 register to 0 (count stops).

3. The operating mode can be changed only when the count is stopped while both the bits TSTART and TCSTF in the TRJCR0 register are set to 0 (count stops). Do not change the operating mode during count operation.

4. When selecting f_{IL} as the count source, set the WUTMMCK0 bit in the operation speed mode register (OSMC) to 1.

However, f_{SUB} cannot be selected as the count source for timer RJ when the SELLOSC bit in the CKSEL register is set to 1.

5. Only available in the RL78/F14. Do not make the setting in other products.

6. The TEDGPL bit is enabled only in event counter mode.

7. The 20-pin products do not have TRJIO0 and TRJO0 pins. Thus, the pulse output mode, event counter mode, pulse width measurement mode, and pulse period measurement mode cannot be used.

Caution Write access to the TRJMR0 register initializes the output from pins TRJO0 and TRJIO0 of timer RJ. For details on the output level at initialization, refer to the description shown below Figure 7-7 Format of Timer RJ I/O Control Register 0 (TRJIOC0).

7.3.8 Timer RJ Event Pin Select Register 0 (TRJISR0)

<R> The TRJISR0 register is used to the timer for controlling the event count period and sets the polarity in event counter mode.

The TRJISR0 register needs to be set by a 1-bit or 8-bit memory manipulation instruction.

Reset signal generation clears this register to 00H.

Figure 7-9. Format of Timer RJ Event Pin Select Register 0 (TRJISR0)

Address : F0243H After Reset: 00H

Symbol	7	6	5	4	3	2	1	0
TRJISR0	—	—	—	—	—	RCCPSEL2 **Note**	RCCPSEL1 **Note**	RCCPSEL0 **Note**

Bit 7 to 3	Nothing is assigned	R/W
—	The write value must be 0. The read value is 0.	R

RCCPSEL2	Timer output signal and INTP4 polarity selection	R/W
0	An event is counted during the low-level period	R/W
1	An event is counted during the high-level period	

RCCPSEL1	RCCPSEL0	Timer output signal selection	R/W
0	0	TRDIOD1	R/W
0	1	TRDIOC1	
1	0	TO02	
1	1	TO03	

Note Bits RCCPSEL0 to RCCPSEL2 are enabled only in event counter mode.

Caution The 20-pin products do not have the timer RJ event pin select register 0 (TRJISR0).

7.3.9 Port mode registers 1, 4 (PM1, PM4)

These registers set input/output of ports 1 and 4 in 1-bit units.

When using the ports (such as P41/TRJIO0 and P10/TRJO0) to be shared with the timer output pin for timer output, set the port mode register (PMxx) bit and the port register (Pxx) bit corresponding to each port to 0.

Example: When using P41/TRJIO0 for timer output
Set the PM41 bit of port mode register 4 to 0.
Set the P41 bit of port register 4 to 0.

When using the ports (such as P41/TRJIO0) to be shared with the timer input pin for timer input, set the port mode register (PMxx) bit corresponding to each port to 1. At this time, the port register (Pxx) bit may be 0 or 1.

Example: When using P41/TRJIO0 for timer input
Set the PM41 bit of port mode register 4 to 1.
Set the P41 bit of port register 4 to 1.

The PM1 and PM4 registers can be set by a 1-bit or 8-bit memory manipulation instruction.

Reset signal generation sets these registers to FFH.

Figure 7-10. Format of Port Mode Registers 1, 4 (PM1, PM4) (100-pin products)

Address: FFF21H After reset: FFH R/W

Symbol	7	6	5	4	3	2	1	0
PM1	PM17	PM16	PM15	PM14	PM13	PM12	PM11	PM10

Address: FFF24H After reset: FFH R/W

Symbol	7	6	5	4	3	2	1	0
PM4	PM47	PM46	PM45	PM44	PM43	PM42	PM41	PM40

PMmn	Pmn pin I/O mode selection (m = 1, 4 ; n = 0 to 7)
0	Output mode (output buffer on)
1	Input mode (output buffer off)

Remark The figure shown above presents the format of port mode registers 1 and 4 of the 100-pin products. The format of the port mode register of other products, see **4.5 Settings of Port Mode Register and Output Latch When Using Alternate Function.**

7.4 Operation

7.4.1 Reload Register and Counter Rewrite Operation

Regardless of the operating mode, the timing of the rewrite operation to the reload register and the counter differs depending on the value in the TSTART bit in the TRJCR0 register. When the TSTART bit is 0 (count stops), the count value is directly written to the reload register and the counter. When the TSTART bit is 1 (count starts), the value is written to the reload register in synchronization with the count source, and then to the counter in synchronization with the next count source.

Figure 7-11 shows the Timing of Rewrite Operation with TSTART Bit Value.

Figure 7-11. Timing of Rewrite Operation with TSTART Bit Value

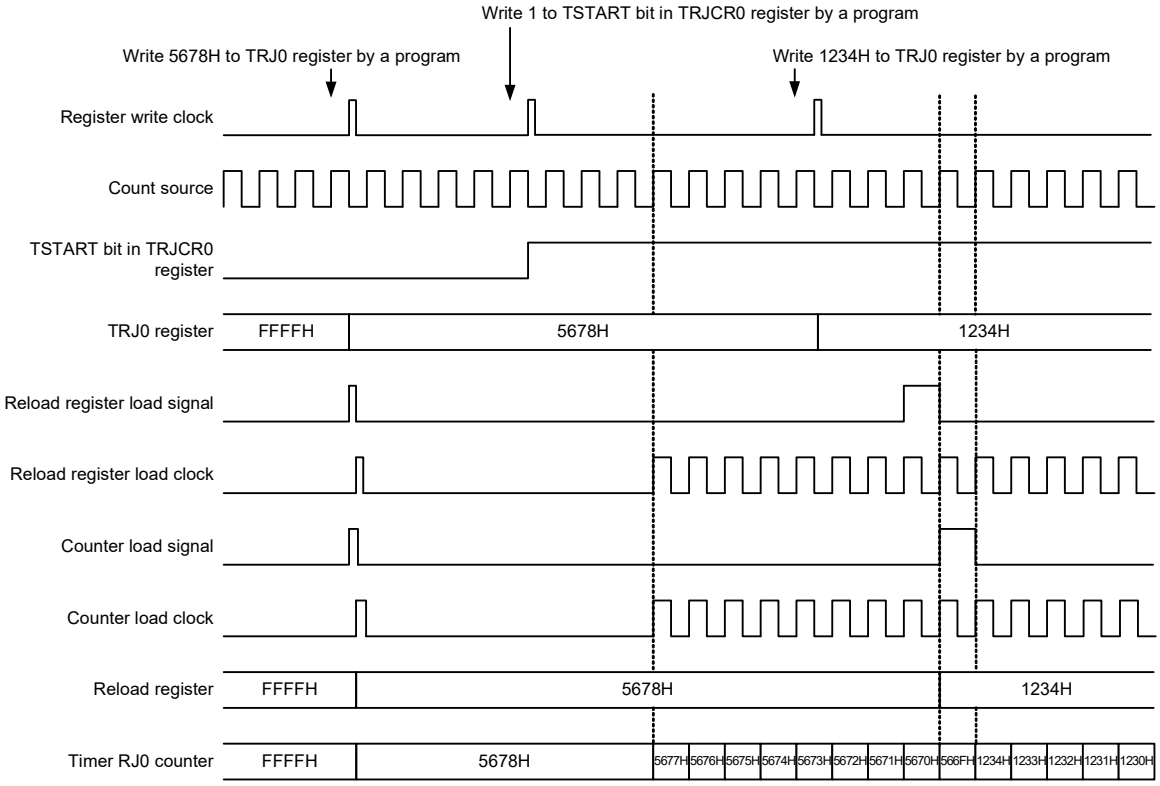

7.4.2 Timer Mode

In this mode, the counter is decremented by the count source selected by bits TCK0 to TCK2 in the TRJMR0 register.

In timer mode, the count value is decremented by 1 each time the count source is input. When the count value reaches 0000H and the next count source is input, an underflow occurs and an interrupt request is generated.

Figure 7-12 shows the Operation Example in Timer Mode.

Figure 7-12. Operation Example in Timer Mode

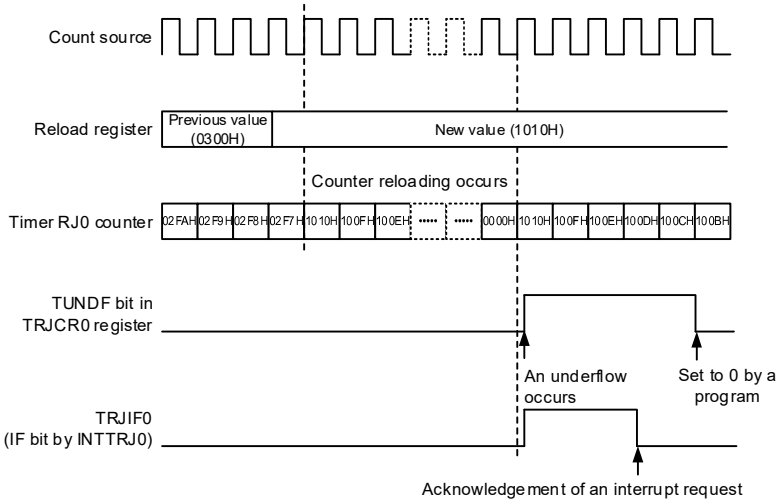

<R>

7.4.3 Pulse Output Mode

In this mode, the counter is decremented by the count source selected by bits TCK0 to TCK2 in the TRJMR0 register, and the output level of pins TRJIO0 and TRJO0 pin is inverted each time an underflow occurs.

In pulse output mode, the count value is decremented by 1 each time the count source is input. When the count value reaches 0000H and the next count source is input, an underflow occurs and an interrupt request is generated.

In addition, a pulse can be output from pins TRJIO0 and TRJO0. The output level is inverted each time an underflow occurs. The pulse output from the TRJO0 pin can be stopped by the TOENA bit in the TRJIOC0 register.
Also, the output level can be selected by the TEDGSEL bit in the TRJIOC0 register.
Figure 7-13 shows the Operation Example in Pulse Output Mode.

Caution The 20-pin products do not have TRJIO0 and TRJO0 pins. Thus, the pulse output mode cannot be used.

Figure 7-13. Operation Example in Pulse Output Mode

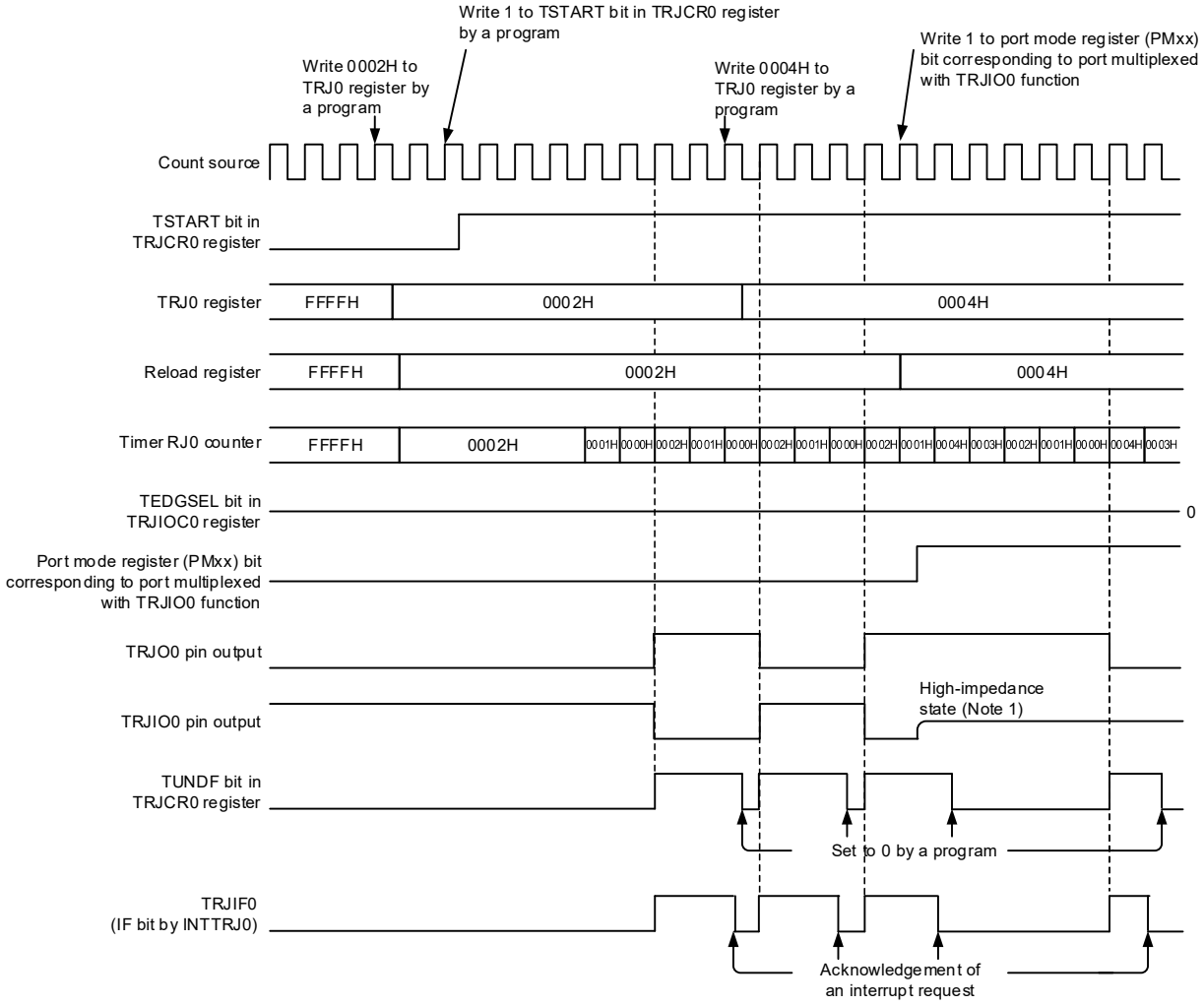

Note 1: The TRJIO0 pin becomes high impedance by output enable control on the port selected as the TRJIO0 function.

7.4.4 Event Counter Mode

In this mode, the counter is decremented by an external event signal (count source) input to the TRJIO0 pin. Various periods for counting events can be set by bits TIOGT0 and TIOGT1 in the TRJIOC0 register and the TRJISR0 register. In addition, the filter function for the TRJIO0 input can be specified by bits TIPF0 and TIPF1 in the TRJIOC0 register.

Also, the output from the TRJO0 pin can be toggled even in event counter mode.

When event counter mode is used, see **7. 5. 5 Procedure for Setting Pins TRJO0 and TRJIO0**.

Figure 7-14 shows the Operation Example in Event Counter Mode.

Caution The 20-pin products do not have TRJIO0 and TRJO0 pins. Thus, the event counter mode cannot be used.

Figure 7-14. Operation Example 1 in Event Counter Mode

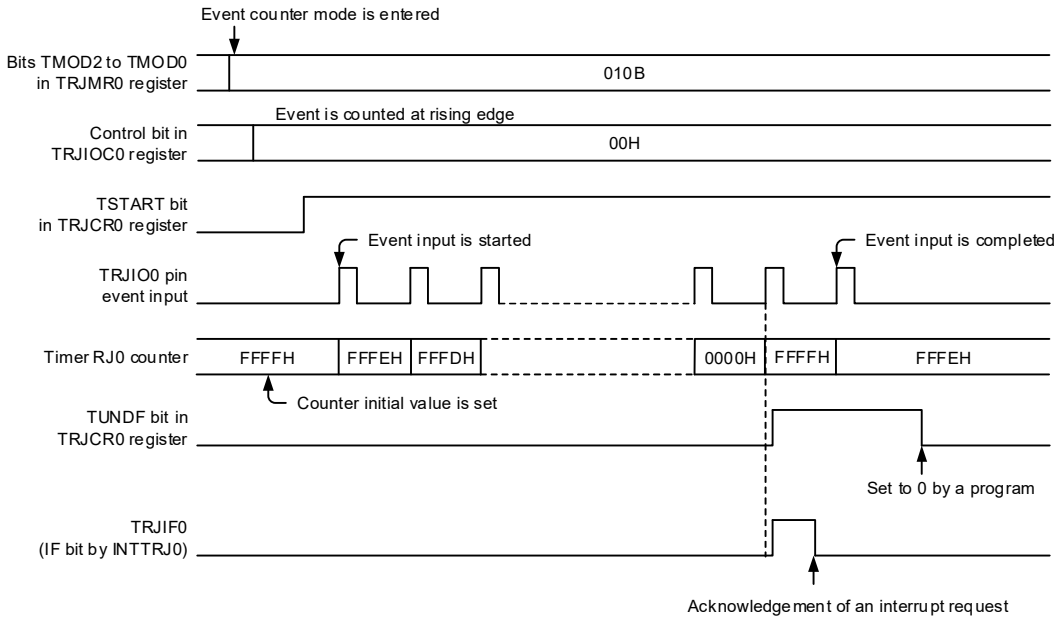

<R>

Figure 7-15 shows an operation example for counting during the specified period in event counter mode (bits TIOGT1 and TIOGT0 in the TRJIO0 register are set to 01B or 10B).

Figure 7-15. Operation Example 2 in Event Counter Mode

Timing example when the setting of operating mode is as follows:
TRJMR0 register: TMOD2, 1, 0 = 010B (event counter mode)
TRJIOC0 register: TIOGT1, 0 = 01B (event is counted during specified period for external interrupt pin)
TIPF1, 0 = 00B (no filter)
TEDGSEL = 0 (count at rising edge)
TRJISR0 register: RCCPSEL2 = 1 (high-level period is counted)

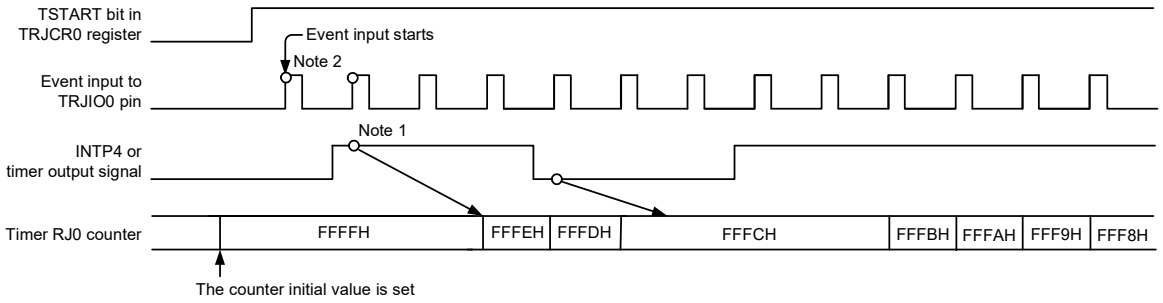

The following notes apply only when bits TIOGT1 and TIOGT0 in the TRJIOC0 register are 01B or 10B for the setting of operating mode in event count mode.

Notes 1. To control synchronization, there is a delay of two cycles of the count source until count operation is affected.
2. Count operation may be performed for two cycles of the count source immediately after the count is started, depending on the previous state before the count is stopped.
To disable the count for two cycles immediately after the count is started, write 1 to the TSTOP bit in the TRJCR0 register to initialize the internal circuit, and then make operation settings before starting count operation.

7.4.5 Pulse Width Measurement Mode

In this mode, the pulse width of an external signal input to the TRJIO0 pin is measured.

When the level specified by the TEDGSEL bit in the TRJIOC0 register is input to the TRJIO0 pin, the decrement is started with the selected count source. When the specified level on the TRJIO0 pin ends, the counter is stopped, the TEDGF bit in the TRJCR0 register is set to 1 (active edge received), and an interrupt request is generated. The measurement of pulse width data is performed by reading the count value while the counter is stopped. Also, when the counter underflows during measurement, the TUNDF bit in the TRJCR0 register is set to 1 (underflow) and an interrupt request is generated.

Figure 7-16 shows the Operation Example in Pulse Width Measurement Mode.

When accessing bits TEDGF and TUNDF in the TRJCR0 register, see **7. 5. 2 Access to Flags (Bits TEDGF and TUNDF in TRJCR0 Register)**.

Caution The 20-pin products do not have TRJIO0 pin. Thus, the pulse width measurement mode cannot be used.

Figure 7-16. Operation Example in Pulse Width Measurement Mode

This example applies when the high-level width of the measurement pulse is measured (TEDGSEL bit in TRJIOC0 register = 1)

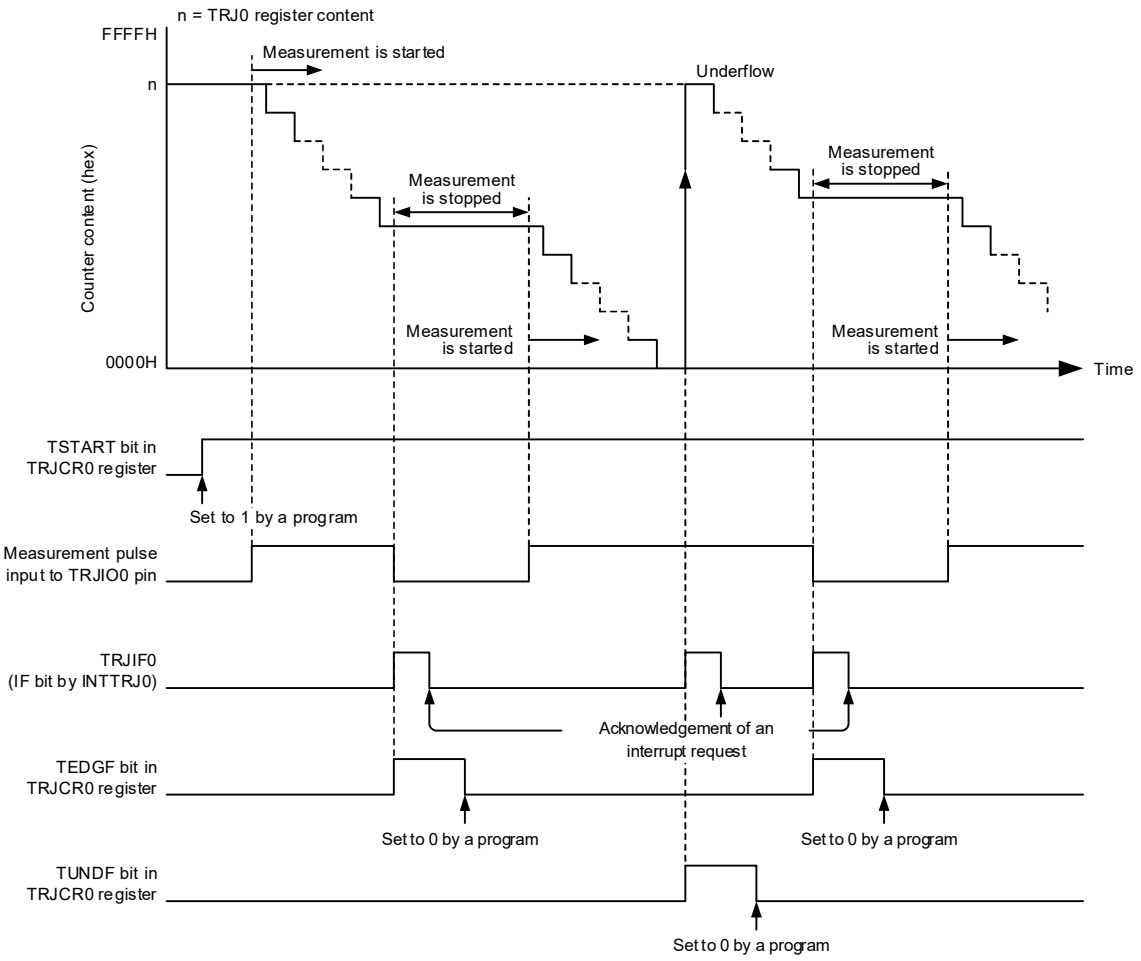

7.4.6 Pulse Period Measurement Mode

In this mode, the pulse period of an external signal input to the TRJIO0 pin is measured.

The counter is decremented by the count source selected by bits TCK0 to TCK2 in the TRJMR0 register. When a pulse with the period specified by the TEDGSEL bit in the TRJIOC0 register is input to the TRJIO0 pin, the count value is transferred to the read-out buffer at the rising edge of the count source. The value in the reload register is loaded to the counter at the next rising edge. Simultaneously, the TEDGF bit in the TRJCR0 register is set to 1 (active edge received) and an interrupt request is generated. The read-out buffer (TRJ0 register) is read at this time and the difference from the reload value is the period data of the input pulse. The period data is retained until the read-out buffer is read. When the counter underflows, the TUNDF bit in the TRJCR0 register is set to 1 (underflow) and an interrupt request is generated.

Figure 7-17 shows the Operation Example in Pulse Period Measurement Mode.

Only input pulses with a period longer than twice the period of the count source. Also, the low-level and high-level widths must be both longer than the period of the count source. If a pulse period shorter than these conditions is input, the input may be ignored.

Caution The 20-pin products do not have TRJIO0 pin. Thus, the pulse period measurement mode cannot be used.

Figure 7-17. Operation Example in Pulse Period Measurement Mode

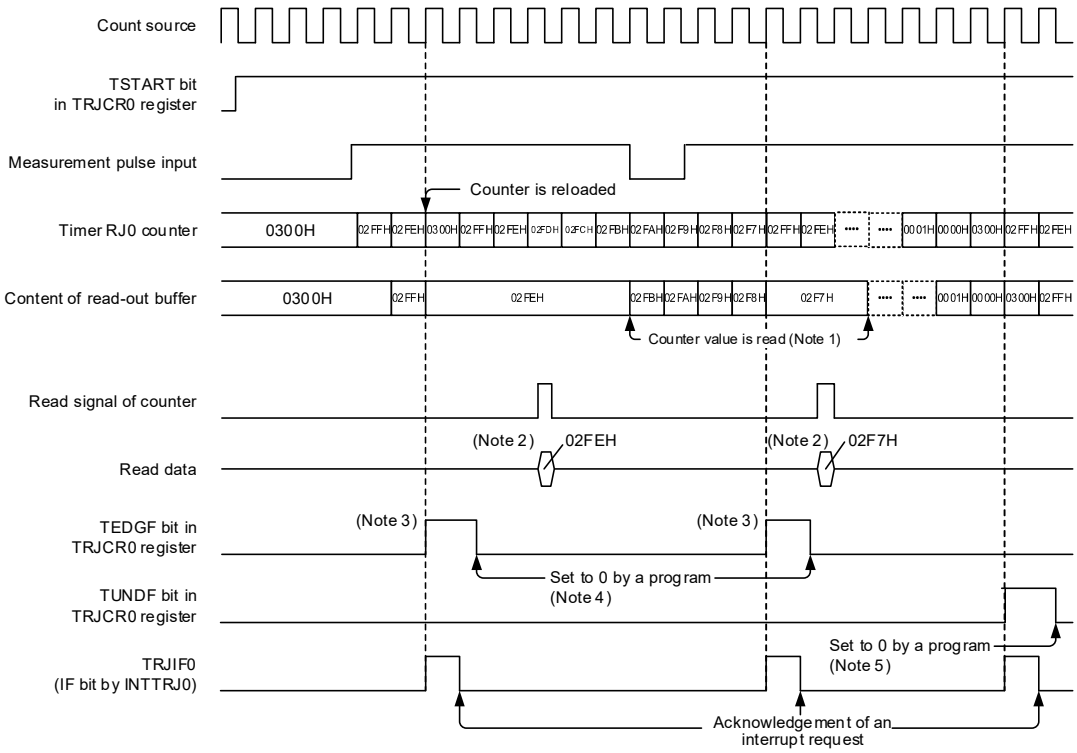

This example applies when the initial value of the TRJ0 register is set to 0300H, the TEDGSEL bit in the TRJIOC0 register is set to 0, and the period from one rising edge to the next edge of the measurement pulse is measured.

Notes:

1. Reading from the TRJ0 register must be performed during the period from when the TEDGF bit is set to 1 (active edge received) until the next active edge is input. The content of the read-out buffer is retained until the TRJ0 register is read. If it is not read before the active edge is input, the measurement result of the previous period is retained.
2. When the TRJ0 register is read in pulse period measurement mode, the content of the read-out buffer is read.
3. When the active edge of the measurement pulse is input and then the set edge of an external pulse is input, the TEDGF bit in the TRJCR0 register is set to 1 (active edge received).
4. To set to 0 by a program, write 0 to the TEDGF bit in the TRJCR0 register using an 8-bit memory manipulation instruction.
5. To set to 0 by a program, write 0 to the TUNDF bit in the TRJCR0 register using an 8-bit memory manipulation instruction.

7.4.7 Coordination with Event Link Controller (ELC)

The ELC is only available in the RL78/F14.

Through coordination with the ELC, event input from the ELC can be set to be the count source. Bits TCK0 to TCK2 in the TRJMR0 register count at the rising edge of event input from the ELC. However, ELC input does not function in event counter mode.

The ELC setting procedure is shown below:

- Procedure for starting operation
  (1) Set the event output destination select register (ELSELRn) for the event link controller (ELC).
  (2) Set the operating mode for the event generation source.
  (3) Set the mode for timer RJ.
  (4) Start the count operation of timer RJ.
  (5) Start the operation of the event generation source.
- Procedure for stopping operation
  (1) Stop the operation of the event generation source.
  (2) Stop the count operation of timer RJ.
  (3) Set the event output destination select register (ELSELRn) for the event link controller (ELC) to 0.

7.4.8 Output Settings for Each Mode

Table 7-6 and Table 7-7 list the states of pins TRJO0 and TRJIO0 in each mode.

Table 7-6. TRJO0 Pin Setting

Operating Mode	TRJIOC0 Register		TRJO0 Pin Output
	TOENA Bit	TEDGSEL Bit	
All modes	1	1	Inverted output
		0	Normal output
	0	0 or 1	Output disabled

Table 7-7. TRJIO0 Pin Setting

<R>
<R>

Operating Mode	Port Mode Register 4	TRJIOC0 Register	TRJIO0 Pin I/O
	PM41	TEDGSEL Bit	
Timer mode	0 or 1	0 or 1	Input (Not used)
Pulse output mode	1	0 or 1	Output disabled (Hi-z output)
	0	1	Normal output
		0	Inverted output
Event counter mode	1	0 or 1	Input
Pulse width measurement mode			
Pulse period measurement mode			

<R>

7.5 Notes on Timer RJ

7.5.1 Count Operation Start and Stop Control

- When event counter mode is set or the count source is set to other than the ELC

After 1 (count starts) is written to the TSTART bit in the TRJCR0 register while the count is stopped, the TCSTF bit in the TRJCR0 register remains 0 (count stops) for three cycles of the count source. Do not access the registers associated with timer RJ [Note] other than the TCSTF bit until this bit is set to 1 (count in progress).

After 0 (count stops) is written to the TSTART bit during a count operation, the TCSTF bit remains 1 for three cycles of the count source. When the TCSTF bit is set to 0, the count is stopped. Do not access the registers associated with timer RJ [Note] other than the TCSTF bit until this bit is set to 0.

Clear the interrupt register before changing the TSTART bit from 0 to 1. Refer to **CHAPTER 21 INTERRUPT FUNCTIONS** for details.

Note Registers associated with timer RJ: TRJ0, TRJCR0, TRJIOC0, TRJMR0, and TRJISR0

- When event counter mode is set or the count source is set to the ELC

After 1 (count starts) is written to the TSTART bit in the TRJCR0 register while the count is stopped, the TCSTF bit in the TRJCR0 register remains 0 (count stops) for two cycles of the CPU clock. Do not access the registers associated with timer RJ [Note] other than the TCSTF bit until this bit is set to 1 (count in progress).

After 0 (count stops) is written to the TSTART bit during a count operation, the TCSTF bit remains 1 for two cycles of the CPU clock. When the TCSTF bit is set to 0, the count is stopped. Do not access the registers associated with timer RJ [Note] other than the TCSTF bit until this bit is set to 0.

Clear the interrupt register before changing the TSTART bit from 0 to 1. Refer to **CHAPTER 21 INTERRUPT FUNCTIONS** for details.

The ELC is only available in the RL78/F14.

Note Registers associated with timer RJ: TRJ0, TRJCR0, TRJIOC0, TRJMR0, and TRJISR0

7.5.2 Access to Flags (Bits TEDGF and TUNDF in TRJCR0 Register)

Bits TEDGF and TUNDF in the TRJCR0 register are set to 0 by writing 0 by a program, but writing 1 to these bits has no effect. If a read-modify-write instruction is used to set the TRJCR0 register, bits TEDGF and TUNDF may be erroneously set to 0 depending on the timing, even when the TEDGF bit is set to 1 (active edge received) and the TUNDF bit is set to 1 (underflow) during execution of the instruction. Use an 8-bit memory manipulation instruction to access to the TRJCR0 register.

7.5.3 Access to Counter Register

When bits TSTART and TCSTF in the TRJCR0 register are both 1 (count starts), allow at least three cycles of the count source clock between writes when writing to the TRJ0 register successively.

7.5.4 When Changing Mode

The registers associated with timer RJ operating mode (TRJIOC0, TRJMR0, and TRJISR0) can be changed only when the count is stopped with both the TSTART and TCSTF bits set to 0 (count stops). Do not change these registers during count operation.

When the registers associated with timer RJ operating mode are changed, the values of bits TSTART and TCSTF are undefined. Write 0 (no active edge received) to the TEDGF bit and 0 (no underflow) to the TUNDF bit before starting the count.

7.5.5 Procedure for Setting Pins TRJO0 and TRJIO0

After a reset, the I/O ports multiplexed with pins TRJO0 and TRJIO0 function as input ports.

To output from pins TRJO0 and TRJIO0, use the following setting procedure.

The 20-pin products do not have TRJO0 and TRJIO0 pins.

Changing procedure

(1) Set the mode.

(2) Set the initial value/output enabled.

(3) Set the port register bits corresponding to pins TRJO0 and TRJIO0 to 0.

(4) Set the port mode register bits corresponding to pins TRJO0 and TRJIO0 to output mode.
(Output is started from pins TRJO0 and TRJIO0)

(5) Start the count (TSTART in TRJCR0 register = 1).

To input from the TRJIO0 pin, use the following setting procedure:

(1) Set the mode.

(2) Set the initial value/edge selected.

(3) Set the port mode register bit corresponding to TRJIO0 pin to input mode.
(Input is started from the TRJIO0 pin)

(4) Start the count (TSTART in TRJCR0 register = 1).

(5) Wait until the TCSTF bit in the TRJCR0 register is set to 1 (count in progress).
(In event counter mode only)

(6) Input an external event from the TRJIO0 pin.

(7) The processing on completion of the first measurement is invalid (the measured value is valid for the second and subsequent times). (In pulse width measurement mode and pulse period measurement mode only)

7.5.6 When Timer RJ is not Used

When timer RJ is not used, set bits TMOD2 to TMOD0 in the TRJMR0 register to 000B (timer mode) and set the TOENA bit in the TRJIOC0 register to 0 (TRJO output disabled).

7.5.7 When Timer RJ Operating Clock is Stopped

Supplying or stopping the timer RJ clock can be controlled by the TRJ0EN bit in the PER1 register. Note that the following SFRs cannot be accessed while the timer RJ clock is stopped. Make sure the timer RJ clock is supplied before accessing any of these registers.

Registers TRJ0, TRJCR0, TRJMR0, TRJIOC0, and TRJISR0.

7.5.8 Procedure for Setting STOP Mode (Event Counter Mode)

To perform event counter mode operation during STOP mode, first supply the timer RJ clock and then use the following procedure to enter STOP mode.

Setting procedure

(1) Set the operating mode.

(2) Start the count (TSTART = 1, TCSTF = 1).

(3) Stop supplying the timer RJ clock.

To stop event counter mode operation during STOP mode, use the following procedure to stop operation.

(1) Supply the timer RJ clock.

(2) Stop the count (TSTART = 0, TCSTF = 0)

7.5.9 Functional Restriction in STOP Mode (Event Counter Mode Only)

When event counter mode operation is performed during STOP mode, the digital filter function cannot be used.

7.5.10 When Count is Forcibly Stopped by TSTOP Bit

After the counter is forcibly stopped by the TSTOP bit in the TRJCR0 register, do not access the following SFRs for one cycle of the count source.

Registers TRJ0, TRJCR0, and TRJMR0

7.5.11 Digital Filter

When the digital filter is used, do not start timer operation for five cycles of the digital filter clock after setting bits TIPF1 and TIPF0.

Also, do not start timer operation for five cycles of the digital filter clock when the TEDGSEL bit in the TRJIOC register is changed while the digital filter is used.

7.5.12 When Selecting f_{IL} as Count Source

When selecting f_{IL} as the count source, set the WUTMMCK0 bit in the operation speed mode control register (OSMC) to 1. However, f_{SUB} cannot be selected as the count source for timer RJ when f_{SL} (f_{IL}) is selected as the count source for timer RD or the output clock for clock output/buzzer output.

CHAPTER 8 TIMER RD

Timer RD contains two 16-bit timer units (timer RD0 and timer RD1).

8.1 Overview

Each of timer RD0 and timer RD1 has four I/O pins.
The timer RD operating clock (f_{TRD}) is selectable from f_{CLK}, f_{MP}, or f_{SL}.

Figure 8-1 shows the Timer RD Block Diagram and Table 8-1 lists the Timer RD Pin Configuration.
Timer RD has four modes:

- Timer mode
  - Input capture function — Transfer the counter value to a register with an external signal as the trigger
  - Output compare function — Detect register value matches with a counter (Pin output can be changed at detection)
  - PWM function — Output pulse of any width continuously

The following three modes use the PWM function.

- Reset synchronous PWM mode — Output three-phase waveforms (6) without sawtooth wave modulation and dead time
- Complementary PWM mode — Output three-phase waveforms (6) with triangular wave modulation and dead time
- PWM3 mode — Output PWM waveforms (2) with a fixed period

The timer mode input capture function, output compare function, and PWM function are equivalent in timer RD0 and timer RD1, and these functions can be selected individually for each pin. Also, a combination of these functions can be used in timer RD0 and timer RD1.

In reset synchronous PWM mode, complementary PWM mode, and PWM3 mode, a waveform is output with a combination of counters and registers in timer RD0 and timer RD1. Pin functions depend on the mode.

Figure 8-1. Timer RD Block Diagram

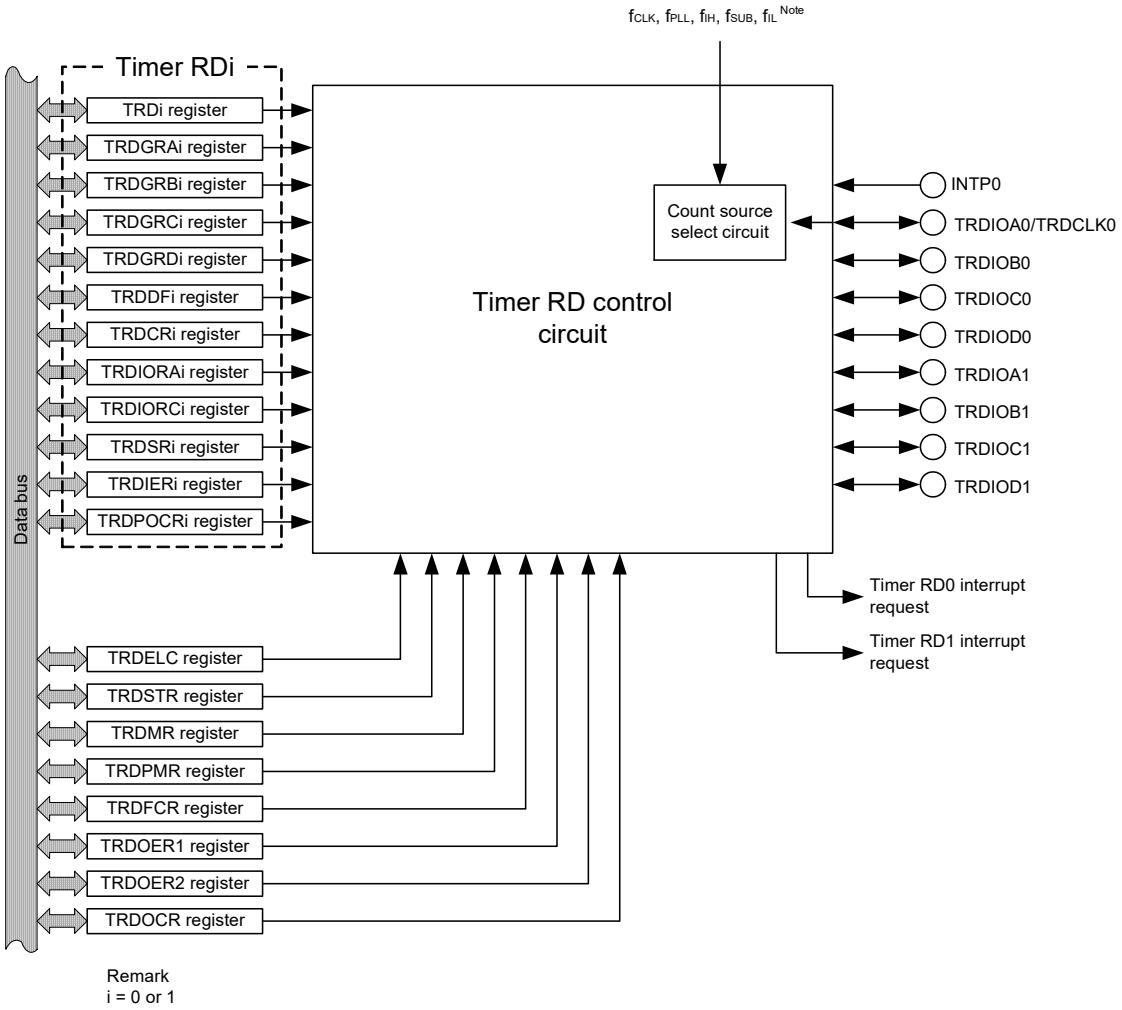

Note f_{IH} can be selected when it is 64 MHz or 48 MHz. f_{PLL} can be selected when it is over 32 MHz.

Remark i = 0 or 1

Table 8-1. Timer RD Pin Configuration

Pin Name	Assigned Pin	I/O	Function
TRDIOA0/TRDCLK0	P13 (P15)	Input/Output	Function varies depending on the mode. Refer to descriptions of individual modes for details.
TRDIOB0	P125 (P11)	Input/Output	
TRDIOC0	P14	Input/Output	
TRDIOD0	P120 (P12)	Input/Output	
TRDIOA1	P15	Input/Output	
TRDIOB1	P17	Input/Output	
TRDIOC1	P16	Input/Output	
TRDIOD1	P30	Input/Output	

8.2 Registers

Table 8-2 lists the Timer RD Register Configuration.

Table 8-2. Timer RD Register Configuration

Register Name	Symbol	After Reset	Address	Access Size
Peripheral Enable Register 1	PER1	00H	F02C0H	1, 8
Clock Select Register	CKSEL	00H	F02C4H	1, 8
Timer RD ELC Register	TRDELC	00H Note	F0260H	1, 8
Timer RD Start Register	TRDSTR	0CH Note	F0263H	8
Timer RD Mode Register	TRDMR	00H Note	F0264H	1, 8
Timer RD PWM Function Select Register	TRDPMR	00H Note	F0265H	1, 8
Timer RD Function Control Register	TRDFCR	80H Note	F0266H	1, 8
Timer RD Output Master Enable Register 1	TRDOER1	FFH Note	F0267H	1, 8
Timer RD Output Master Enable Register 2	TRDOER2	00H Note	F0268H	1, 8
Timer RD Output Control Register	TRDOCR	00H Note	F0269H	1, 8
Timer RD Digital Filter Function Select Register 0	TRDDF0	00H Note	F026AH	1, 8
Timer RD Digital Filter Function Select Register 1	TRDDF1	00H Note	F026BH	1, 8
Timer RD Control Register 0	TRDCR0	00H Note	F0270H	1, 8
Timer RD I/O Control Register A0	TRDIORA0	00H Note	F0271H	1, 8
Timer RD I/O Control Register C0	TRDIORC0	88H Note	F0272H	1, 8
Timer RD Status Register 0	TRDSR0	00H Note	F0273H	1, 8
Timer RD Interrupt Enable Register 0	TRDIER0	00H Note	F0274H	1, 8
Timer RD PWM Function Output Level Control Register 0	TRDPOCR0	00H Note	F0275H	1, 8
Timer RD Counter 0	TRD0	0000H Note	F0276H	16
Timer RD General Register A0	TRDGRA0	FFFFH Note	F0278H	16
Timer RD General Register B0	TRDGRB0	FFFFH Note	F027AH	16
Timer RD General Register C0	TRDGRC0	FFFFH Note	FFF58H	16
Timer RD General Register D0	TRDGRD0	FFFFH Note	FFF5AH	16
Timer RD Control Register 1	TRDCR1	00H Note	F0280H	1, 8
Timer RD I/O Control Register A1	TRDIORA1	00H Note	F0281H	1, 8
Timer RD I/O Control Register C1	TRDIORC1	88H Note	F0282H	1, 8
Timer RD Status Register 1	TRDSR1	00H Note	F0283H	1, 8
Timer RD Interrupt Enable Register 1	TRDIER1	00H Note	F0284H	1, 8
Timer RD PWM Function Output Level Control Register 1	TRDPOCR1	00H Note	F0285H	1, 8
Timer RD Counter 1	TRD1	0000H Note	F0286H	16
Timer RD General Register A1	TRDGRA1	FFFFH Note	F0288H	16
Timer RD General Register B1	TRDGRB1	FFFFH Note	F028AH	16
Timer RD General Register C1	TRDGRC1	FFFFH Note	FFF5CH	16
Timer RD General Register D1	TRDGRD1	FFFFH Note	FFF5EH	16
PWM output delay control register 0	PWMDLY0	0000H	F0228H	16
Port Register 1	P1	00H	FFF01H	1, 8
Port Mode Register 1	PM1	FFH	FFF21H	1, 8
Port Register 3	P3	00H	FFF03H	1, 8
Port Mode Register 3	PM3	FFH	FFF23H	1, 8
Port Register 12	P12	-	FFF0CH	1, 8
Port Mode Register 12	PM12	FFH	FFF2CH	1, 8
PLL Control Register	PLLCTL	00H	F02C5H	1, 8
PLL Status Register	PLLSTS	00H	F02C6H	1, 8
f_{MP} Clock Division Register	MDIV	00H/01H	F02C7H	8
System Clock Control Register	CKC	00H	FFFA4H	1, 8

Note The timer RD SFRs are undefined when FRQSEL4 = 1 in the user option byte (000C2H/020C2H) and TRD0EN = 0 in the PER1 register. If it is necessary to read the initial value, set f_{CLK} to f_{IH} and TRD0EN = 1 before reading.

8.2.1 Peripheral enable register 1 (PER1)

The PER1 register is used to enable or disable supplying the clock to the peripheral hardware. Clock supply to the hardware that is not used is also stopped so as to decrease the power consumption and noise.

To use timer RD, be sure to set bit 4 (TRD0EN) to 1.

Set the PER1 register by a 1-bit or 8-bit memory manipulation instruction.

Reset signal generation clears this register to 00H.

Figure 8-2. Format of Peripheral Enable Register 1 (PER1)

Address: F02C0H After reset: 00H R/W

Symbol	<7>	6	<5>	<4>	<3>	2	1	<0>
PER1	DACEN[Note]	0	CMPEN[Note]	TRD0EN	DTCEN	0	0	TRJ0EN

TRD0EN	Control of timer RD input clock supply
0	Stops input clock supply. • SFR used by timer RD cannot be written. • Timer RD is in the reset status.
1	Enables input clock supply. • SFR used by timer RD can be read and written.

Note Only for RL78/F14.

Cautions 1. When setting timer RD, be sure to set the TRD0EN bit to 1 first. If TRD0EN = 0, writing to a control register of timer RD is ignored, and all read values are default values (except for port mode registers 1, 3, and 12 (PM1, PM3, and PM12) and port registers 1, 3, and 12 (P1, P3, and P12).

2. Be sure to clear the following bits to 0.

RL78/F13: bits 1, 2, and 5 to 7

RL78/F14: bits 1, 2, and 6

<R> **3. When selecting f_{IH} (64 MHz or 48 MHz) as the count source, set f_{CLK} to f_{IH}. When selecting f_{PLL} (over 32 MHz) as the count source, set f_{CLK} to f_{PLL}. When selecting f_{SUB} or f_{IL} as the count source to access the timer RD-related registers, set f_{CLK} to f_{SUB} or f_{IL}, respectively.**

8.2.2 Clock Select Register (CKSEL)

This register is used to select the CPU clock (f_{SUB}/f_{IL}) and the clocks for the timer RJ, timer RD, and clock output/buzzer output. Together with the CMC register, the SELLOSC bit is used to set the operation mode of the subsystem clock. For details, see **Figure 5-3 Format of Clock Operation Mode Control Register (CMC)**.

Set the CKSEL register by a 1-bit or 8-bit memory manipulation instruction.

Writing to the CKSEL register is disabled when the GCSC bit of the IAWCTL register is set to 1.

Figure 8-3. Format of Clock Select Register (CKSEL)

Address: F02C4H After reset: 00H R/W

Symbol	7	6	5	4	3	<2>	1	<0>
CKSEL	0	0	0	0	0	TRD_ CKSEL	0	SELLOSC Notes 5, 6

TRD_ CKSEL	Control of TRD clock selection
0	Selects f_{CLK} or f_{MP} Note 1.
1	Selects f_{SL} Note 2.

SELLOSC Notes 5, 6	Control of sub/low-speed on-chip oscillator selection clock (f_{SL}) selection
0	Selects f_{SUB} Note 3
1	Selects f_{IL} Note 4

<R> **Notes 1.** When FRQSEL4 = 1 in the user option byte (000C2H/020C2H) or PLLDIV1 = 1 (f_{PLL} > 32 MHz) in the PLLCTL register, set the TRD_CKSEL bit to 0.
When FRQSEL4 = 1 in the user option byte (000C2H/020C2H) or PLLDIV1 = 1 (f_{PLL} > 32 MHz) in the PLLCTL register, the timer RD operating clock (f_{TRD}) becomes f_{MP}.

2. When f_{SL} is selected as the timer RD operating clock (f_{TRD}), f_{SL} should be selected as the CPU clock
(set the CSS bit in the CKC register to 1).

3. When setting f_{SUB} as the CPU/peripheral hardware clock, first set the SELLOSC bit to 0 and then set the CSS bit in the CKC register to 1.

4. When setting f_{IL} as the CPU/peripheral hardware clock, first set the SELLOSC bit to 1 and then set the CSS bit in the CKC register to 1.

5. When the SELLOSC bit is set to 1, the low-speed on-chip oscillator operates.

6. When setting the CKSEL register in the 20-, 30-, or 32-pin products, set the SELLOSC bit to 1.

8.2.3 Timer RD ELC Register (TRDELC)

Figure 8-4. Format of Timer RD ELC Register (TRDELC)

Address: F0260H After Reset: 00H

Symbol	7	6	5	4	3	2	1	0
TRDELC	—	—	ELCOBE1	ELCICE1	—	—	ELCOBE0	ELCICE0

Bits 7 to 6	Nothing is assigned	R/W
—	The write value must be 0. The read value is 0.	R

ELCOBE1	ELC event input 1 enable for timer RD pulse output forced cutoff	R/W
0	Forced cutoff is disabled	R/W
1	Forced cutoff is enabled	

ELCICE1	ELC event input 1 select for timer RD input capture D1	R/W
0	Input capture D1 is selected	R/W
1	Event input 1 from the event link controller (ELC) is selected	

Bits 3 to 2	Nothing is assigned	R/W
—	The write value must be 0. The read value is 0.	R

ELCOBE0	ELC event input 0 enable for timer RD pulse output forced cutoff	R/W
0	Forced cutoff is disabled	R/W
1	Forced cutoff is enabled	

ELCICE0	ELC event input 0 select for timer RD input capture D0	R/W
0	Input capture D0 is selected	R/W
1	Event input 0 from the event link controller (ELC) is selected	

Caution The timer RD ELC register (TRDELC) is only available in the RL78/F14. Do not access the register in other products.

8.2.4 Timer RD Start Register (TRDSTR)

Set the TRDSTR register by an 8-bit memory manipulation instruction. See **8. 5. 1 (1) TRDSTR Register in 8.5 Notes on Timer RD**.

Figure 8-5. Format of Timer RD Start Register (TRDSTR)

Address: F0263H After Reset: 0CH [Note 1]

Symbol	7	6	5	4	3	2	1	0
TRDSTR	—	—	—	—	CSEL1	CSEL0	TSTART1	TSTART0

Bits 7 to 4	Nothing is assigned	R/W
—	The write value must be 0. The read value is 0.	R

CSEL1	TRD1 count operation select [Note 2]	R/W
0	Count stops at compare match with TRDGRA1 register	R/W
1	Count continues after compare match with TRDGRA1 register [Note 3]	

CSEL0	TRD0 count operation select	R/W
0	Count stops at compare match with TRDGRA0 register	R/W
1	Count continues after compare match with TRDGRA0 register [Note 3]	

TSTART1	TRD1 count start flag [Notes 4, 5]	R/W
0	Count stops	R/W
1	Count starts	

TSTART0	TRD0 count start flag [Notes 6, 7]	R/W
0	Count stops	R/W
1	Count starts	

Notes 1. The value after reset is undefined when FRQSEL4 = 1 in the user option byte (000C2H/020C2H) and TRD0EN = 0 in the PER1 register. If it is necessary to read the initial value, set f_{CLK} to f_{IH} and TRD0EN = 1 before reading.

2. Do not use in PWM3 mode.

3. Set to 1 for the input capture function.

4. Write 0 to the TSTART1 bit while the CSEL1 bit is set to 1.

5. When the CSEL1 bit is 0 and a compare match signal (TRDIOA1) is generated, this flag is set to 0 (count stops).

6. Write 0 to the TSTART0 bit while the CSEL0 bit is set to 1.

7. When the CSEL0 bit is 0 and a compare match signal (TRDIOA0) is generated, this flag is set to 0 (count stops).

8.2.5 Timer RD Mode Register (TRDMR)

Figure 8-6. Format of Timer RD Mode Register (TRDMR)

Address: F0264H After Reset:00H [Note 1]

Symbol	<7>	<6>	<5>	<4>	3	2	1	<0>
TRDMR	TRDBFD1	TRDBFC1	TRDBFD0	TRDBFC0	0	0	0	TRDSYNC

TRDBFD1	TRDGRD1 register function select [Note 2]	R/W
0	General register	R/W
1	Buffer register for TRDGRB1 register	

TRDBFC1	TRDGRC1 register function select [Note 2]	R/W
0	General register	R/W
1	Buffer register for TRDGRA1 register	

TRDBFD0	TRDGRD0 register function select [Note 2]	R/W
0	General register	R/W
1	Buffer register for TRDGRB0 register	

TRDBFC0	TRDGRC0 register function select [Notes 2, 3]	R/W
0	General register	R/W
1	Buffer register for TRDGRA0 register	

Bits 3 to1	Nothing is assigned	R/W
—	The write value must be 0. The read value is 0.	R

TRDSYNC	Timer RD synchronous [Note 4]	R/W
0	TRD0 and TRD1 operate independently	R/W
1	TRD0 and TRD1 operate synchronously	

Notes 1. The value after reset is undefined when FRQSEL4 = 1 in the user option byte (000C2H/020C2H) and TRD0EN = 0 in the PER1 register. If it is necessary to read the initial value, set f_{CLK} to f_{IH} and TRD0EN = 1 before reading.

2. In the output compare function, if 0 (TRDGRji register output pin is changed) is selected for the IOj3 (j = C or D) bit in the TRDIORCi (i = 0 or 1) register, set the TRDBFji bit in the TRDMR register to 0.

3. Set to 0 (general register) in complementary PWM mode.

4. Set to 0 (TRD0 and TRD1 operate independently) in reset synchronous PWM mode, complementary PWM mode, and PWM3 mode.

8.2.6 Timer RD PWM Function Select Register (TRDPMR)

Figure 8-7. Format of Timer RD PWM Function Select Register (TRDPMR) [Timer Mode]

Address: F0265H After Reset:00H [Note]

Symbol	7	<6>	<5>	<4>	3	<2>	<1>	<0>
TRDPMR	0	TRDPWMD1	TRDPWMC1	TRDPWMB1	0	TRDPWMD0	TRDPWMC0	TRDPWMB0

Bit 7	Nothing is assigned	R/W
—	The write value must be 0. The read value is 0.	R

TRDPWMD1	PWM function of TRDIOD1 select	R/W
0	Input capture function or output compare function	R/W
1	PWM function	

TRDPWMC1	PWM function of TRDIOC1 select	R/W
0	Input capture function or output compare function	R/W
1	PWM function	

TRDPWMB1	PWM function of TRDIOB1 select	R/W
0	Input capture function or output compare function	R/W
1	PWM function	

Bit 3	Nothing is assigned	R/W
—	The write value must be 0. The read value is 0.	R

TRDPWMD0	PWM function of TRDIOD0 select	R/W
0	Input capture function or output compare function	R/W
1	PWM function	

TRDPWMC0	PWM function of TRDIOC0 select	R/W
0	Input capture function or output compare function	R/W
1	PWM function	

TRDPWMB0	PWM function of TRDIOB0 select	R/W
0	Input capture function or output compare function	R/W
1	PWM function	

Note The value after reset is undefined when FRQSEL4 = 1 in the user option byte (000C2H/020C2H) and TRD0EN = 0 in the PER1 register. If it is necessary to read the initial value, set f_{CLK} to f_{IH} and TRD0EN = 1 before reading.

8.2.7 Timer RD Function Control Register (TRDFCR)

Figure 8-8. Format of Timer RD Function Control Register (TRDFCR)

Address: F0266H After Reset: 80H [Note 1]

Symbol	7	6	5	4	3	2	1	0
TRDFCR	PWM3	STCLK	0	0	OLS1	OLS0	CMD1	CMD0

PWM3	PWM3 mode select [Note 2]	R/W
• In the timer mode, set to 1 (other than PWM3 mode). • In PWM3 mode, set to 0 (PWM3 mode). • Disabled in reset synchronous and complementary PWM modes.		R/W

STCLK	External clock input select	R/W
• In the timer mode, the reset synchronous PWM mode, and the complementary PWM mode, 0: External clock input disabled 1: External clock input enabled • In PWM3 mode, set to 0 (external clock input disabled).		R/W

Bits 5 to 4	Reserved	R/W
0	Set to 0.	R/W

OLS1	Counter-phase output level select (in reset synchronous PWM mode or complementary PWM mode)	R/W
• In reset synchronous and complementary PWM modes, 0: High initial output and low active level 1: Low initial output and high active level • Disabled in timer and PWM3 modes.		R/W

OLS0	Phase output level select (in reset synchronous PWM mode or complementary PWM mode)	R/W
• In reset synchronous and complementary PWM modes, 0: High initial output and low active level 1: Low initial output and high active level • Disabled in timer and PWM3 modes.		R/W

CMD1	CMD0	Combination mode select Notes 3, 4	R/W
		• In timer and PWM3 modes, set to 00B (timer mode or PWM3 mode). • In reset synchronous PWM mode, set to 01B (reset synchronous PWM mode). • In complementary PWM mode, CMD1 CMD0 1 0: Complementary PWM mode (transfer from the buffer register to the general register when TRD1 underflows) 1 1: Complementary PWM mode (transfer from the buffer register to the general register at compare match between registers TRD0 and TRDGRA0) Other than the above: Do not set.	R/W

Notes 1. The value after reset is undefined when FRQSEL4 = 1 in the user option byte (000C2H/020C2H) and TRD0EN = 0 in the PER1 register. If it is necessary to read the initial value, set f_{CLK} to f_{IH} and TRD0EN = 1 before reading.

2. When bits CMD1 and CMD0 are set to 00B (timer mode or PWM3 mode), the setting of the PWM3 bit is enabled.

3. Set bits CMD0 and CMD1 when both the TSTART0 and TSTART1 bits in the TRDSTR register are set to 0 (count stops).

4. When bits CMD1 and CMD0 are set to 01B, 10B, or 11B, the MCU enters reset synchronous PWM mode or complementary PWM mode regardless of the settings of the TRDPMR register.

8.2.8 Timer RD Output Master Enable Register 1 (TRDOER1)

Figure 8-9. Format of Timer RD Output Master Enable Register 1 (TRDOER1) [Output Compare Function, PWM Function, Reset Synchronous PWM Mode, Complementary PWM Mode, and PWM3 Mode]

Address: F0267H After Reset: FFH [Note 1]

Symbol	7	6	5	4	3	2	1	0
TRDOER1	ED1	EC1	EB1	EA1	ED0	EC0	EB0	EA0

ED1	TRDIOD1 output disable [Note 2]	R/W
0	Output enabled	R/W
1	Output disabled (TRDIOD1 pin functions as an I/O port.)	

EC1	TRDIOC1 output disable [Note 2]	R/W
0	Output enabled	R/W
1	Output disabled (TRDIOC1 pin functions as an I/O port.)	

EB1	TRDIOB1 output disable [Note 2]	R/W
0	Output enabled	R/W
1	Output disabled (TRDIOB1 pin functions as an I/O port.)	

EA1	TRDIOA1 output disable [Notes 2, 3]	R/W
0	Output enabled	R/W
1	Output disabled (TRDIOA1 pin functions as an I/O port)	

ED0	TRDIOD0 output disable [Note 2]	R/W
0	Output enabled	R/W
1	Output disabled (TRDIOD0 pin functions as an I/O port.)	

EC0	TRDIOC0 output disable [Note 2]	R/W
0	Output enabled	R/W
1	Output disabled (TRDIOC0 pin functions as an I/O port.)	

EB0	TRDIOB0 output disable	R/W
0	Output enabled	R/W
1	Output disabled (TRDIOB0 pin functions as an I/O port.)	

EA0	TRDIOA0 output disable [Notes 3, 4]	R/W
0	Output enabled	R/W
1	Output disabled (TRDIOA0 pin functions as an I/O port)	

Notes 1. The value after reset is undefined when FRQSEL4 = 1 in the user option byte (000C2H/020C2H) and TRD0EN = 0 in the PER1 register. If it is necessary to read the initial value, set f_{CLK} to f_{IH} and TRD0EN = 1 before reading.

2. Set to 1 in PWM3 mode.

3. Set to 1 in PWM function.

4. Set to 1 in reset synchronous PWM mode and complementary PWM mode.

8.2.9 Timer RD Output Master Enable Register 2 (TRDOER2)

Figure 8-10. Format of Timer RD Output Master Enable Register 2 (TRDOER2)
[PWM Function, Reset Synchronous PWM Mode, Complementary PWM Mode, and PWM3 Mode]

Address: F0268H After Reset: 00H [Note 1]

Symbol	<7>	6	5	4	3	2	1	<0>
TRDOER2	TRDPTO	0	0	0	0	0	0	TRDSHUTS

TRDPTO	INTP0 of pulse output forced cutoff signal input enabled [Note 2]	R/W
0	Pulse output forced cutoff input disabled	R/W
1	Pulse output forced cutoff input enabled (The TRDSHUTS bit is set to 1 when a low level is applied to the INTP0 pin.)	

Bits 6 to 1	Nothing is assigned	R/W
—	The write value must be 0. The read value is 0.	R

TRDSHUTS	Forced cutoff flag	R/W
0	Not forcibly cut off	R/W
1	Forcibly cut off	
This bit is set to 1 when the pulse is forcibly cut off by an INTP0 or ELC [Note 3] input event. This bit is not automatically cleared. To stop the forced cutoff of the pulse, write 0 to this bit while the count is stopped (TSTARTi = 0). The pulse is also forcibly cut off when 1 is written to the TRDSHUTS bit in an enabled mode.		

Notes 1. The value after reset is undefined when FRQSEL4 = 1 in the user option byte (000C2H/020C2H) and TRD0EN = 0 in the PER1 register. If it is necessary to read the initial value, set f_{CLK} to f_{IH} and TRD0EN = 1 before reading.

2. See **8.3.1 (4) Pulse Output Forced Cutoff**.

3. The ELC is only available in the RL78/F14.

8.2.10 Timer RD Output Control Register (TRDOCR)

Write to the TRDOCR register when bits TSTART0 and TSTART1 in the TRDSTR register are both 0 (count stops).

Figure 8-11. Format of Timer RD Output Control Register (TRDOCR) [Output Compare Function]

Address: F0269H After Reset: 00H [Note 1]

Symbol	7	6	5	4	3	2	1	0
TRDOCR	TOD1	TOC1	TOB1	TOA1	TOD0	TOC0	TOB0	TOA0

TOD1	TRDIOD1 initial output level select [Note 2]	R/W
0	Low initial output	R/W
1	High initial output	

TOC1	TRDIOC1 initial output level select [Note 2]	R/W
0	Low initial output	R/W
1	High initial output	

TOB1	TRDIOB1 initial output level select [Note 2]	R/W
0	Low initial output	R/W
1	High initial output	

TOA1	TRDIOA1 initial output level select	R/W
0	Low initial output	R/W
1	High initial output	

TOD0	TRDIOD0 initial output level select [Note 2]	R/W
0	Low initial output	R/W
1	High initial output	

TOC0	TRDIOC0 initial output level select [Note 2]	R/W
0	Low initial output	R/W
1	High initial output	

TOB0	TRDIOB0 initial output level select [Note 2]	R/W
0	Low initial output	R/W
1	High initial output	

TOA0	TRDIOA0 initial output level select	R/W
0	Low initial output	R/W
1	High initial output	

Notes 1. The value after reset is undefined when FRQSEL4 = 1 in the user option byte (000C2H/020C2H) and TRD0EN = 0 in the PER1 register. If it is necessary to read the initial value, set f_{CLK} to f_{IH} and TRD0EN = 1 before reading.

2. If the pin function is set for waveform output, the initial output level is output when the TRDOCR register is set.

Figure 8-12. Format of Timer RD Output Control Register (TRDOCR) [PWM Function]

Address: F0269H After Reset: 00H Note 1

Symbol	7	6	5	4	3	2	1	0
TRDOCR	TOD1	TOC1	TOB1	TOA1	TOD0	TOC0	TOB0	TOA0

TOD1	TRDIOD1 initial output level select Note 2	R/W
0	Initial output is not active level	R/W
1	Initial output is active level	

TOC1	TRDIOC1 initial output level select Note 2	R/W
0	Initial output is not active level	R/W
1	Initial output is active level	

TOB1	TRDIOB1 initial output level select Note 2	R/W
0	Initial output is not active level	R/W
1	Initial output is active level	

TOA1	TRDIOA1 initial output level select	R/W
Set to 0.		R/W

TOD0	TRDIOD0 initial output level select Note 2	R/W
0	Initial output is not active level	R/W
1	Initial output is active level	

TOC0	TRDIOC0 initial output level select Note 2	R/W
0	Initial output is not active level	R/W
1	Initial output is active level	
Enabled in reset synchronous and complementary PWM modes.		

TOB0	TRDIOB0 initial output level select Note 2	R/W
0	Initial output is not active level	R/W
1	Initial output is active level	

TOA0	TRDIOA0 initial output level select	R/W
Set to 0.		R/W

Notes 1. The value after reset is undefined when FRQSEL4 = 1 in the user option byte (000C2H/020C2H) and TRD0EN = 0 in the PER1 register. If it is necessary to read the initial value, set f_{CLK} to f_{IH} and TRD0EN = 1 before reading.

2. If the pin function is set for waveform output, the initial output level is output when the TRDOCR register is set.

Figure 8-13. Format of Timer RD Output Control Register (TRDOCR) [PWM3 Mode]

Address: F0269H After Reset: 00H Note 1

Symbol	7	6	5	4	3	2	1	0
TRDOCR	TOD1	TOC1	TOB1	TOA1	TOD0	TOC0	TOB0	TOA0

TOD1	TRDIOD1 initial output level select	R/W
Disabled in PWM3 mode.		R/W

TOC1	TRDIOC1 initial output level select	R/W
Disabled in PWM3 mode.		R/W

TOB1	TRDIOB1 initial output level select	R/W
Disabled in PWM3 mode.		R/W

TOA1	TRDIOA1 initial output level select	R/W
Disabled in PWM3 mode.		R/W

TOD0	TRDIOD0 initial output level select	R/W
Disabled in PWM3 mode.		R/W

TOC0	TRDIOC0 initial output level select	R/W
Disabled in PWM3 mode.		R/W

TOB0	TRDIOB0 initial output level select Note 2	R/W
0	Low initial output, high active level, high output at TRDGRB1 compare match, and low output at TRDGRB0 compare match	R/W
1	High initial output, low active level, low output at TRDGRB1 compare match, and high output at TRDGRB0 compare match	

TOA0	TRDIOA0 initial output level select	R/W
0	Low initial output, high active level, high output at TRDGRA1 compare match, and low output at TRDGRA0 compare match	R/W
1	High initial output, low active level, low output at TRDGRA1 compare match, and high output at TRDGRA0 compare match	

Notes 1. The value after reset is undefined when FRQSEL4 = 1 in the user option byte (000C2H/020C2H) and TRD0EN = 0 in the PER1 register. If it is necessary to read the initial value, set f_{CLK} to f_{IH} and TRD0EN = 1 before reading.

2. If the pin function is set for waveform output, the initial output level is output when the TRDOCR register is set.

8.2.11 Timer RD Digital Filter Function Select Register i (TRDDFi) (i = 0 or 1)

Figure 8-14. Format of Timer RD Digital Filter Function Select Register i (TRDDFi) (i = 0 or 1) [Input Capture Function]

Address: F026AH (TRDDF0), F026BH (TRDDF1) After Reset: 00H Note 1

Symbol	7	6	5	4	3	2	1	0
TRDDFi	DFCK1	DFCK0	PENB1	PENB0	DFD	DFC	DFB	DFA

DFCK1	DFCK0	Clock select for digital filter function Note 2	R/W
0	0	$f_{TRD}/32$	R/W
0	1	$f_{TRD}/8$	
1	0	f_{TRD}	
1	1	Count source (clock selected by bits TCK0 to TCK2 in the TRDCRi register)	

PENB1	PENB0	TRDIOBi pin pulse forced cutoff control	R/W
0	0	Set to 00B.	R/W

DFD	TRDIODi pin digital filter function select	R/W
0	Function is not used	R/W
1	Function is used	
If the digital filter is enabled, edge detection is performed after five or more cycles of the digital filter sampling clock have elapsed.		

DFC	TRDIOCi pin digital filter function select	R/W
0	Function is not used	R/W
1	Function is used	
If the digital filter is enabled, edge detection is performed after five or more cycles of the digital filter sampling clock have elapsed.		

DFB	TRDIOBi pin digital filter function select	R/W
0	Function is not used	R/W
1	Function is used	
If the digital filter is enabled, edge detection is performed after five or more cycles of the digital filter sampling clock have elapsed.		

DFA	TRDIOAi pin digital filter function select	R/W
0	Function is not used	R/W
1	Function is used	
If the digital filter is enabled, edge detection is performed after five or more cycles of the digital filter sampling clock have elapsed.		

Notes 1. The value after reset is undefined when FRQSEL4 = 1 in the user option byte (000C2H/020C2H) and TRD0EN = 0 in the PER1 register. If it is necessary to read the initial value, set f_{CLK} to f_{IH} and TRD0EN = 1 before reading.

2. Set bits DFCK0 and DFCK1 before starting count operation.

Figure 8-15. Format of Timer RD Digital Filter Function Select Register i (TRDDFi) (i = 0 or 1)
[PWM Function, Reset Synchronous PWM Mode, Complementary PWM Mode, and PWM3 Mode]

Address: F026AH (TRDDF0), F026BH (TRDDF1) After Reset: 00H [Note]

Symbol	7	6	5	4	3	2	1	0
TRDDFi	DFCK1	DFCK0	PENB1	PENB0	DFD	DFC	DFB	DFA

DFCK1	DFCK0	TRDIOAi pin pulse forced cutoff control	R/W
0	0	Forced cutoff disabled	R/W
0	1	High-impedance output	
1	0	Low output	
1	1	High output	
Set these bits to 00B (forced cutoff disabled) if the corresponding pin is not used as a timer RD output port in these modes. Also, set these bits while the count is stopped.			

PENB1	PENB0	TRDIOBi pin pulse forced cutoff control	R/W
0	0	Forced cutoff disabled	R/W
0	1	High-impedance output	
1	0	Low output	
1	1	High output	
Set these bits to 00B (forced cutoff disabled) if the corresponding pin is not used as a timer RD output port in these modes. Also, set these bits while the count is stopped.			

DFD	DFC	TRDIOCi pin pulse forced cutoff control	R/W
0	0	Forced cutoff disabled	R/W
0	1	High-impedance output	
1	0	Low output	
1	1	High output	
Set these bits to 00B (forced cutoff disabled) if the corresponding pin is not used as a timer RD output port in these modes. Also, set these bits while the count is stopped.			

DFB	DFA	TRDIODi pin pulse forced cutoff control	R/W
0	0	Forced cutoff disabled	R/W
0	1	High-impedance output	
1	0	Low output	
1	1	High output	
Set these bits to 00B (forced cutoff disabled) if the corresponding pin is not used as a timer RD output port in these modes. Also, set these bits while the count is stopped.			

Note The value after reset is undefined when FRQSEL4 = 1 in the user option byte (000C2H/020C2H) and TRD0EN = 0 in the PER1 register. If it is necessary to read the initial value, set f_{CLK} to f_{IH} and TRD0EN = 1 before reading.

8.2.12 Timer RD Control Register i (TRDCRi) (i = 0 or 1)

The TRDCR1 register is not used in reset synchronous PWM mode or PWM3 mode.

Figure 8-16. Format of Timer RD Control Register i (TRDCRi) (i = 0 or 1)
[Input Capture Function and Output Compare Function]

Address: F0270H (TRDCR0), F0280H (TRDCR1) After Reset: 00H Note 1

Symbol	7	6	5	4	3	2	1	0
TRDCRi	CCLR2	CCLR1	CCLR0	CKEG1	CKEG0	TCK2	TCK1	TCK0

CCLR2	CCLR1	CCLR0	TRDi counter clear select	R/W
0	0	0	Clear disabled (free-running operation)	R/W
0	0	1	Clear by input capture/compare match with TRDGRAi	
0	1	0	Clear by input capture/compare match with TRDGRBi	
0	1	1	Synchronous clear (clear simultaneously with other timer RDi counter) Note 2	
1	0	0	Do not set.	
1	0	1	Clear by input capture/compare match with TRDGRCi	
1	1	0	Clear by input capture/compare match with TRDGRDi	
1	1	1	Do not set.	

CKEG1	CKEG0	External clock edge select Note 3	R/W
0	0	Count at the rising edge	R/W
0	1	Count at the falling edge	
1	0	Count at both edges	
1	1	Do not set.	

TCK2	TCK1	TCK0	Count source select	R/W
0	0	0	f_{TRD} Note 4	R/W
0	0	1	$f_{TRD}/2$ Notes 4, 6	
0	1	0	$f_{TRD}/4$ Notes 4, 6	
0	1	1	$f_{TRD}/8$ Notes 4, 6	
1	0	0	$f_{TRD}/32$ Notes 4, 6	
1	0	1	TRDCLK input Note 5	
1	1	0	Do not set.	
1	1	1	Do not set.	

Notes
1. The value after reset is undefined when FRQSEL4 = 1 in the user option byte (000C2H/020C2H) and TRD0EN = 0 in the PER1 register. If it is necessary to read the initial value, set f_{CLK} to f_{IH} and TRD0EN = 1 before reading.
2. Enabled when the TRDSYNC bit in the TRDMR register is 1 (TRD0 and TRD1 operate synchronously).
3. Valid when bits TCK2 to TCK0 are set to 101B (TRDCLK input) and the STCLK bit is set to 1 (external clock input enabled).
4. As the timer RD operating clock (f_{TRD}), f_{CLK} is selected when FRQSEL4 = 0 in the user option byte (000C2H/020C2H), (PLLDIV1 = 0 or SELPLLS = 0), and TRD_CKSEL = 0. f_{IH} is selected when FRQSEL4 = 1 and TRD_CKSEL = 0. f_{PLL} is selected when (PLLDIV1 = 1 and SELPLLS = 1) and TRD_CKSEL = 0. f_{SUB} is selected when SELLOSC = 0 and TRD_CKSEL = 1. f_{IL} is selected when SELLOSC = 1 and TRD_CKSEL = 1. For details, see **Figure 8-40**.
   When selecting the count source for the timer RD, set the same clock source as the count source for f_{CLK} before setting bit 4 (TRD0EN) in the peripheral enable register 1 (PER1).
5. Valid when the STCLK bit in the TRDFCR register is set to 1 (external clock input enabled).
6. With this setting, select f_{CLK} as the timer RD operating clock (f_{TRD}).

Figure 8-17. Format of Timer RD Control Register i (TRDCRi) (i = 0 or 1) [PWM Mode]

Address: F0270H (TRDCR0), F0280H (TRDCR1) After Reset: 00H Note 1

Symbol	7	6	5	4	3	2	1	0
TRDCRi	CCLR2	CCLR1	CCLR0	CKEG1	CKEG0	TCK2	TCK1	TCK0

CCLR2	CCLR1	CCLR0	TRDi counter clear select	R/W
Set to 001B (TRDi register is cleared at compare match with TRDGRAi register).				R/W

CKEG1	CKEG0	External clock edge select Note 2	R/W
0	0	Count at the rising edge	R/W
0	1	Count at the falling edge	
1	0	Count at both edges	
1	1	Do not set.	

TCK2	TCK1	TCK0	Count source select	R/W
0	0	0	f_{CLK}, f_{IH}, f_{PLL}, f_{SUB}, f_{IL} Note 3	R/W
0	0	1	$f_{CLK}/2$	
0	1	0	$f_{CLK}/4$	
0	1	1	$f_{CLK}/8$	
1	0	0	$f_{CLK}/32$	
1	0	1	TRDCLK input Note 4	
1	1	0	Do not set.	
1	1	1	Do not set.	

Notes 1. The value after reset is undefined when FRQSEL4 = 1 in the user option byte (000C2H/020C2H) and TRD0EN = 0 in the PER1 register. If it is necessary to read the initial value, set f_{CLK} to f_{IH} and TRD0EN = 1 before reading.

2. Valid when bits TCK2 to TCK0 are set to 101B (TRDCLK input) and the STCLK bit is set to 1 (external clock input enabled).

3. f_{CLK} is selected when FRQSEL4 = 0 in the user option byte (000C2H/020C2H), (PLLDIV1 = 0 or SELPLLS = 0), and TRD_CKSEL = 0. f_{IH} is selected when FRQSEL4 = 1 and TRD_CKSEL = 0. f_{PLL} is selected when (PLLDIV1 = 1 and SELPLLS = 1) and TRD_CKSEL = 0. f_{SUB} is selected when SELLOSC = 0 and TRD_CKSEL = 1. f_{IL} is selected when SELLOSC = 1 and TRD_CKSEL = 1. For details, see **Figure 8-40**.

When selecting the count source for the timer RD, set the same clock source as the count source for f_{CLK} before setting bit 4 (TRD0EN) in the peripheral enable register 1 (PER1).

4. Valid when the STCLK bit in the TRDFCR register is set to 1 (external clock input enabled).

Figure 8-18. Format of Timer RD Control Register 0 (TRDCR0) [Reset Synchronous PWM Mode]

Address: F0270H (TRDCR0) After Reset: 00H [Note 1]

Symbol	7	6	5	4	3	2	1	0
TRDCR0	CCLR2	CCLR1	CCLR0	CKEG1	CKEG0	TCK2	TCK1	TCK0

CCLR2	CCLR1	CCLR0	TRD0 counter clear select	R/W
Set to 001B (TRD0 register is cleared at compare match with TRDGRA0 register).				R/W

CKEG1	CKEG0	External clock edge select [Note 2]	R/W
0	0	Count at the rising edge	R/W
0	1	Count at the falling edge	
1	0	Count at both edges	
1	1	Do not set.	

TCK2	TCK1	TCK0	Count source select	R/W
0	0	0	f_{CLK}, f_{IH}, f_{PLL}, f_{SUB}, f_{IL} [Note 3]	R/W
0	0	1	$f_{CLK}/2$	
0	1	0	$f_{CLK}/4$	
0	1	1	$f_{CLK}/8$	
1	0	0	$f_{CLK}/32$	
1	0	1	TRDCLK input [Note 4]	
1	1	0	Do not set.	
1	1	1	Do not set.	

Notes 1. The value after reset is undefined when FRQSEL4 = 1 in the user option byte (000C2H/020C2H) and TRD0EN = 0 in the PER1 register. If it is necessary to read the initial value, set f_{CLK} to f_{IH} and TRD0EN = 1 before reading.

2. Valid when bits TCK2 to TCK0 are set to 101B (TRDCLK input) and the STCLK bit is set to 1 (external clock input enabled).

3. f_{CLK} is selected when FRQSEL4 = 0 in the user option byte (000C2H/020C2H), (PLLDIV1 = 0 or SELPLLS = 0), and TRD_CKSEL = 0. f_{IH} is selected when FRQSEL4 = 1 and TRD_CKSEL = 0. f_{PLL} is selected when (PLLDIV1 = 1 and SELPLLS = 1) and TRD_CKSEL = 0. f_{SUB} is selected when SELLOSC = 0 and TRD_CKSEL = 1. f_{IL} is selected when SELLOSC = 1 and TRD_CKSEL = 1. For details, see **Figure 8-40**.

When selecting the count source for the timer RD, set the same clock source as the count source for f_{CLK} before setting bit 4 (TRD0EN) in the peripheral enable register 1 (PER1).

4. Valid when the STCLK bit in the TRDFCR register is set to 1 (external clock input enabled).

<R> **Figure 8-19. Format of Timer RD Control Register i (TRDCRi) (i = 0, 1) [Complementary PWM Mode]**

<R> Address: F0270H (TRDCR0), F0280H (TRDCR1) After Reset: 00H Note 1 R/W

<R>

Symbol	7	6	5	4	3	2	1	0
TRDCRi	CCLR2	CCLR1	CCLR0	CKEG1	CKEG0	TCK2	TCK1	TCK0

CCLR2	CCLR1	CCLR0	TRD0 counter clear select	R/W
Set to 000B (clear disabled (free-running operation)).				R/W

CKEG1	CKEG0	External clock edge select Notes 2, 3	R/W
0	0	Count at the rising edge	R/W
0	1	Count at the falling edge	
1	0	Count at both edges	
1	1	Do not set.	

TCK2	TCK1	TCK0	Count source select	R/W
0	0	0	f_{CLK}, f_{IH}, f_{PLL}, f_{SUB}, f_{IL} Note 4	R/W
0	0	1	$f_{CLK}/2$	
0	1	0	$f_{CLK}/4$	
0	1	1	$f_{CLK}/8$	
1	0	0	$f_{CLK}/32$	
1	0	1	TRDCLK input Note 5	
1	1	0	Do not set.	
1	1	1	Do not set.	

Notes 1. The value after reset is undefined when FRQSEL4 = 1 in the user option byte (000C2H/020C2H) and TRD0EN = 0 in the PER1 register. If it is necessary to read the initial value, set f_{CLK} to f_{IH} and TRD0EN = 1 before reading.

2. Valid when bits TCK2 to TCK0 are set to 101B (TRDCLK input) and the STCLK bit is set to 1 (external clock input enabled).

3. Set the same value to bits TCK0 to TCK2, CKEG0, and CKEG1 in registers TRDCR0 and TRDCR1.

4. f_{CLK} is selected when FRQSEL4 = 0 in the user option byte (000C2H/020C2H), (PLLDIV1 = 0 or SELPLLS = 0), and TRD_CKSEL = 0. f_{IH} is selected when FRQSEL4 = 1 and TRD_CKSEL = 0. f_{PLL} is selected when (PLLDIV1 = 1 and SELPLLS = 1) and TRD_CKSEL = 0. f_{SUB} is selected when SELLOSC = 0 and TRD_CKSEL = 1. f_{IL} is selected when SELLOSC = 1 and TRD_CKSEL = 1. For details, see **Figure 8-40**.

When selecting the count source for the timer RD, set the same clock source as the count source for f_{CLK} before setting bit 4 (TRD0EN) in the peripheral enable register 1 (PER1).

5. Valid when the STCLK bit in the TRDFCR register is set to 1 (external clock input enabled).

Figure 8-20. Format of Timer RD Control Register 0 (TRDCR0) [PWM3 Mode]

Address: F0270H (TRDCR0) After Reset: 00H [Note 1]

Symbol	7	6	5	4	3	2	1	0
TRDCR0	CCLR2	CCLR1	CCLR0	CKEG1	CKEG0	TCK2	TCK1	TCK0

CCLR2	CCLR1	CCLR0	TRD0 counter clear select	R/W
Set to 001B (TRD0 register is cleared at compare match with TRDGRA0 register).				R/W

CKEG1	CKEG0	External clock edge select	R/W
Disabled in PWM3 mode.			R/W

TCK2	TCK1	TCK0	Count source select	R/W
0	0	0	f_{CLK}, f_{IH}, f_{PLL}, f_{SUB}, f_{IL} [Note 2]	R/W
0	0	1	$f_{CLK}/2$	
0	1	0	$f_{CLK}/4$	
0	1	1	$f_{CLK}/8$	
1	0	0	$f_{CLK}/32$	
1	0	1	Do not set.	
1	1	0	Do not set.	
1	1	1	Do not set.	

Notes 1. The value after reset is undefined when FRQSEL4 = 1 in the user option byte (000C2H/020C2H) and TRD0EN = 0 in the PER1 register. If it is necessary to read the initial value, set f_{CLK} to f_{IH} and TRD0EN = 1 before reading.

2. f_{CLK} is selected when FRQSEL4 = 0 in the user option byte (000C2H/020C2H), (PLLDIV1 = 0 or SELPLLS = 0), and TRD_CKSEL = 0. f_{IH} is selected when FRQSEL4 = 1 and TRD_CKSEL = 0. f_{PLL} is selected when (PLLDIV1 = 1 and SELPLLS = 1) and TRD_CKSEL = 0. f_{SUB} is selected when SELLOSC = 0 and TRD_CKSEL = 1. f_{IL} is selected when SELLOSC = 1 and TRD_CKSEL = 1. For details, see **Figure 8-40**.

When selecting the count source for the timer RD, set the same clock source as the count source for f_{CLK} before setting bit 4 (TRD0EN) in the peripheral enable register 1 (PER1).

8.2.13 Timer RD I/O Control Register Ai (TRDIORAi) (i = 0 or 1)

Figure 8-21. Format of Timer RD I/O Control Register Ai (TRDIORAi) (i = 0 or 1) [Input Capture Function]

Address: F0271H (TRDIORA0), F0281H (TRDIORA1) After Reset: 00H [Note 1]

Symbol	7	6	5	4	3	2	1	0
TRDIORAi	—	IOB2	IOB1	IOB0	0	IOA2	IOA1	IOA0

Bit 7	Nothing is assigned	R/W
—	The write value must be 0. The read value is 0.	R

IOB2	TRDGRBi mode select [Note 2]	R/W
Set to 1 (input capture) in the input capture function.		R/W

IOB1	IOB0	TRDGRBi control	R/W
0	0	Input capture to TRDGRBi at the rising edge	R/W
0	1	Input capture to TRDGRBi at the falling edge	
1	0	Input capture to TRDGRBi at both edges	
1	1	Do not set.	

Bit 3	Reserved	R/W
0	Set to 0.	R/W

IOA2	TRDGRAi mode select [Note 3]	R/W
Set to 1 (input capture) in the input capture function.		R/W

IOA1	IOA0	TRDGRAi control	R/W
0	0	Input capture to TRDGRAi at the rising edge	R/W
0	1	Input capture to TRDGRAi at the falling edge	
1	0	Input capture to TRDGRAi at both edges	
1	1	Do not set.	

Notes 1. The value after reset is undefined when FRQSEL4 = 1 in the user option byte (000C2H/020C2H) and TRD0EN = 0 in the PER1 register. If it is necessary to read the initial value, set f_{CLK} to f_{IH} and TRD0EN = 1 before reading.

2. If 1 (buffer register for TRDGRBi register) is selected for the TRDBFDi bit in the TRDMR register, set the same value to the IOB2 bit in the TRDIORAi register and the IOD2 bit in the TRDIORCi register.

3. If 1 (buffer register for TRDGRAi register) is selected for the TRDBFCi bit in the TRDMR register, set the same value to the IOA2 bit in the TRDIORAi register and the IOC2 bit in the TRDIORCi register.

Figure 8-22. Format of Timer RD I/O Control Register Ai (TRDIORAi) (i = 0 or 1) [Output Compare Function]

Address: F0271H (TRDIORA0), F0281H (TRDIORA1) After Reset: 00H [Note 1]

Symbol	7	6	5	4	3	2	1	0
TRDIORAi	—	IOB2	IOB1	IOB0	0	IOA2	IOA1	IOA0

Bit 7	Nothing is assigned	R/W
—	The write value must be 0. The read value is 0.	R

IOB2	TRDGRBi mode select [Note 2]	R/W
Set to 0 (output compare) in the output compare function.		R/W

IOB1	IOB0	TRDGRBi control	R/W
0	0	Pin output by compare match is disabled (TRDIOBi pin functions as an I/O port)	R/W
0	1	Low output by compare match with TRDGRBi	
1	0	High output by compare match with TRDGRBi	
1	1	Toggle output by compare match with TRDGRBi	

Bit 3	Reserved	R/W
0	Set to 0.	R/W

IOA2	TRDGRAi mode select [Note 3]	R/W
Set to 0 (output compare) in the output compare function.		R/W

IOA1	IOA0	TRDGRAi control	R/W
0	0	Pin output by compare match is disabled (TRDIOAi pin functions as an I/O port)	R/W
0	1	Low output by compare match with TRDGRAi	
1	0	High output by compare match with TRDGRAi	
1	1	Toggle output by compare match with TRDGRAi	

Notes 1. The value after reset is undefined when FRQSEL4 = 1 in the user option byte (000C2H/020C2H) and TRD0EN = 0 in the PER1 register. If it is necessary to read the initial value, set f_{CLK} to f_{IH} and TRD0EN = 1 before reading.

2. If 1 (buffer register for TRDGRBi register) is selected for the TRDBFDi bit in the TRDMR register, set the same value to the IOB2 bit in the TRDIORAi register and the IOD2 bit in the TRDIORCi register.

3. If 1 (buffer register for TRDGRAi register) is selected for the TRDBFCi bit in the TRDMR register, set the same value to the IOA2 bit in the TRDIORAi register and the IOC2 bit in the TRDIORCi register.

8.2.14 Timer RD I/O Control Register Ci (TRDIORCi) (i = 0 or 1)

Figure 8-23. Format of Timer RD I/O Control Register Ci (TRDIORCi) [Input Capture Function]

Address: F0272H (TRDIORC0), F0282H (TRDIORC1) After Reset: 88H Note 1

Symbol	7	6	5	4	3	2	1	0
TRDIORCi	IOD3	IOD2	IOD1	IOD0	IOC3	IOC2	IOC1	IOC0

IOD3	TRDGRDi register function select	R/W
Set to 1 (general register or buffer register) in the input capture function.		R/W

IOD2	TRDGRDi mode select Note 2	R/W
Set to 1 (input capture) in the input capture function.		R/W

IOD1	IOD0	TRDGRDi control	R/W
0	0	Input capture to TRDGRDi at the rising edge	R/W
0	1	Input capture to TRDGRDi at the falling edge	
1	0	Input capture to TRDGRDi at both edges	
1	1	Do not set.	

IOC3	TRDGRCi register function select	R/W
Set to 1 (general register or buffer register) in the input capture function.		R/W

IOC2	TRDGRCi mode select Note 3	R/W
Set to 1 (input capture) in the input capture function.		R/W

IOC1	IOC0	TRDGRCi control	R/W
0	0	Input capture to TRDGRCi at the rising edge	R/W
0	1	Input capture to TRDGRCi at the falling edge	
1	0	Input capture to TRDGRCi at both edges	
1	1	Do not set.	

Notes 1. The value after reset is undefined when FRQSEL4 = 1 in the user option byte (000C2H/020C2H) and TRD0EN = 0 in the PER1 register. If it is necessary to read the initial value, set f_{CLK} to f_{IH} and TRD0EN = 1 before reading.

2. If 1 (buffer register for TRDGRBi register) is selected for the TRDBFDi bit in the TRDMR register, set the same value to the IOB2 bit in the TRDIORAi register and the IOD2 bit in the TRDIORCi register.

3. If 1 (buffer register for TRDGRAi register) is selected for the TRDBFCi bit in the TRDMR register, set the same value to the IOA2 bit in the TRDIORAi register and the IOC2 bit in the TRDIORCi register.

Figure 8-24. Format of Timer RD I/O Control Register Ci (TRDIORCi) (i = 0 or 1) [Output Compare Function]

Address: F0272H (TRDIORC0), F0282H (TRDIORC1) After Reset: 88H Note 1

Symbol	7	6	5	4	3	2	1	0
TRDIORCi	IOD3	IOD2	IOD1	IOD0	IOC3	IOC2	IOC1	IOC0

IOD3	TRDGRDi register function select	R/W
0	TRDIOBi output register (see **8.3.3 (2) Changing Output Pins in Registers TRDGRCi (i = 0 or 1) and TRDGRDi**)	R/W
1	General register or buffer register	

IOD2	TRDGRDi mode select Note 2	R/W
Set to 0 (output compare) in the output compare function.		R/W

IOD1	IOD0	TRDGRDi control	R/W
0	0	Pin output by compare match is disabled	R/W
0	1	Low output by compare match with TRDGRDi	
1	0	High output by compare match with TRDGRDi	
1	1	Toggle output by compare match with TRDGRDi	

IOC3	TRDGRCi register function select	R/W
0	TRDIOAi output register (see **8.3.3 (2) Changing Output Pins in Registers TRDGRCi (i = 0 or 1) and TRDGRDi**)	R/W
1	General register or buffer register	

IOC2	TRDGRCi mode select Note 3	R/W
Set to 0 (output compare) in the output compare function.		R/W

IOC1	IOC0	TRDGRCi control	R/W
0	0	Pin output by compare match is disabled	R/W
0	1	Low output by compare match with TRDGRCi	
1	0	High output by compare match with TRDGRCi	
1	1	Toggle output by compare match with TRDGRCi	

Notes 1. The value after reset is undefined when FRQSEL4 = 1 in the user option byte (000C2H/020C2H) and TRD0EN = 0 in the PER1 register. If it is necessary to read the initial value, set f_{CLK} to f_{IH} and TRD0EN = 1 before reading.

2. If 1 (buffer register for TRDGRBi register) is selected for the TRDBFDi bit in the TRDMR register, set the same value to the IOB2 bit in the TRDIORAi register and the IOD2 bit in the TRDIORCi register.

3. If 1 (buffer register for TRDGRAi register) is selected for the TRDBFCi bit in the TRDMR register, set the same value to the IOA2 bit in the TRDIORAi register and the IOC2 bit in the TRDIORCi register.

8.2.15 Timer RD Status Register i (TRDSRi) (i = 0 or 1)

Figure 8-25. Format of Timer RD Status Register i (TRDSRi) (i = 0 or 1) [Input Capture Function]

Address: F0273H (TRDSR0), F0283H (TRDSR1) After Reset: 00H Note 1

Symbol	7	6	5	4	3	2	1	0
TRDSRi	—	—	UDF	OVF	IMFD	IMFC	IMFB	IMFA

Bits 7 to 6	Nothing is assigned	R/W
—	The write value must be 0. The read value is 0.	R

UDF	Underflow flag Note 2	R/W
Disabled in the input capture function.		R/W

OVF	Overflow flag Note 3	R/W
[Source for setting to 0] Write 0 after reading. Note 4 [Source for setting to 1] When the TRDi register overflows		R/W

IMFD	Input capture/compare match flag D Note 7	R/W
[Source for setting to 0] Write 0 after reading. Note 4 [Source for setting to 1] Input edge of TRDIODi pin Note 5		R/W

IMFC	Input capture/compare match flag C Note 7	R/W
[Source for setting to 0] Write 0 after reading. Note 4 [Source for setting to 1] Input edge of TRDIOCi pin Note 5		R/W

IMFB	Input capture/compare match flag B Note 7	R/W
[Source for setting to 0] Write 0 after reading. Note 4 [Source for setting to 1] Input edge of TRDIOBi pin Note 6		R/W

IMFA	Input capture/compare match flag A Note 7	R/W
[Source for setting to 0] Write 0 after reading. Note 4 [Source for setting to 1] Input edge of TRDIOAi pin Note 6		R/W

(Notes are listed on the next page.)

Notes 1. The value after reset is undefined when FRQSEL4 = 1 in the user option byte (000C2H/020C2H) and TRD0EN = 0 in the PER1 register. If it is necessary to read the initial value, set fCLK to fIH and TRD0EN = 1 before reading.

2. Nothing is assigned to bit 5 in the TRDSR0 register. The write value must be 0 for bit 5. The read value is 0.

3. When the counter value of timer RDi changes from FFFFH to 0000H, the overflow flag is set to 1. Also, if the counter value of timer RDi changes from FFFFH to 0000H due to an input capture/compare match during operation according to the settings of bits CCLR0 to CCLR2 in the TRDCRi register, the overflow flag is set to 1.

4. The writing results are as follows:

- Writing 1 has no effect.
- If the read value is 0, the bit remains unchanged even if 0 is written to it. (Even if the bit is changed from 0 to 1 after reading and then 0 is written to it, it remains 1.)
- If the read value is 1, writing 0 to the bit sets it to 0.

  Use either (a) or (b) described below to clear each bit of the TRDSRi register.

  (a) Set the TRDIERi register to 00H (disabling all interrupts) and then write 0 to all of the status flags.

  (b) When at least one bit in the TRDIERi register has the setting 1 and the status flag of an interrupt source enabled by the corresponding bit is 1, write 0 to all of the status flag bits whose settings are 1 in the TRDSRi register.

5. Edge selected by bits IOk1 and IOk0 (k = C or D) in the TRDIORCi register.
Including when the TRDBFki bit in the TRDMR register is 1 (TRDGRki is buffer register).

6. Edge selected by bits IOj1 and IOj0 (j = A or B) in the TRDIORAi register.

7. When the DTC is used, bits IMFA, IMFB, IMFC, and IMFD are set to 1 after DTC transfer is completed.

Figure 8-26. Format of Timer RD Status Register i (TRDSRi) (i = 0 or 1)
[Functions Other Than Input Capture Function]

Address: F0273H (TRDSR0), F0283H (TRDSR1) After Reset: 00H Note 1

Symbol	7	6	5	4	3	2	1	0
TRDSRi	—	—	UDF	OVF	IMFD	IMFC	IMFB	IMFA

Bits 7 to 6	Nothing is assigned	R/W
—	The write value must be 0. The read value is 0.	R

UDF	Underflow flag Note 2	R/W
In complementary PWM mode [Source for setting to 0] Write 0 after reading. Note 3 [Sources for setting to 1] When TRDi underflows. Enabled only in complementary PWM mode.		R/W

OVF	Overflow flag Note 4	R/W
[Source for setting to 0] Write 0 after reading. Note 3 [Source for setting to 1] When the TRDi register overflows		R/W

IMFD	Input capture/compare match flag D Note 6	R/W
[Source for setting to 0] Write 0 after reading. Note 3 [Source for setting to 1] When the values of TRDi and TRDGRDi match. Note 5		R/W

IMFC	Input capture/compare match flag C Note 6	R/W
[Source for setting to 0] Write 0 after reading. Note 3 [Source for setting to 1] When the values of TRDi and TRDGRCi match. Note 5		R/W

IMFB	Input capture/compare match flag B Note 6	R/W
[Source for setting to 0] Write 0 after reading. Note 3 [Source for setting to 1] When the values of TRDi and TRDGRBi match.		R/W

IMFA	Input capture/compare match flag A Note 6	R/W
[Source for setting to 0] Write 0 after reading. Note 3 [Source for setting to 1] When the values of TRDi and TRDGRAi match.		R/W

(Notes are listed on the next page.)

Notes 1. The value after reset is undefined when FRQSEL4 = 1 in the user option byte (000C2H/020C2H) and TRD0EN = 0 in the PER1 register. If it is necessary to read the initial value, set f_{CLK} to f_{IH} and TRD0EN = 1 before reading.

2. Nothing is assigned to bit 5 in the TRDSR0 register. The write value must be 0 for bit 5. The read value is 0.

3. The writing results are as follows:

- Writing 1 has no effect.
- If the read value is 0, the bit remains unchanged even if 0 is written to it. (Even if the bit is changed from 0 to 1 after reading and then 0 is written to it, it remains 1.)
- If the read value is 1, writing 0 to the bit sets it to 0.

Use either (a) or (b) described below to clear each bit of the TRDSRi register.

(a) Set the TRDIERi register to 00H (disabling all interrupts) and then write 0 to all of the status flags.

(b) When at least one bit in the TRDIERi register has the setting 1 and the status flag of an interrupt source enabled by the corresponding bit is 1, write 0 to all of the status flag bits whose settings are 1 in the TRDSRi register.

4. When the counter value of timer RDi changes from FFFFH to 0000H, the overflow flag is set to 1. Also, if the counter value of timer RDi changes from FFFFH to 0000H due to an input capture/compare match during operation according to the settings of bits CCLR0 to CCLR2 in the TRDCRi register, the overflow flag is set to 1.

5. Including when the TRDBFki bit (k = C or D) in the TRDMR register is set to 1 (TRDGRKi is buffer register).

6. When the DTC is used, bits IMFA, IMFB, IMFC, and IMFD are set to 1 after DTC transfer is completed.

8.2.16 Timer RD Interrupt Enable Register i (TRDIERi) (i = 0 or 1)

<R> **Figure 8-27. Format of Timer RD Interrupt Enable Register i (TRDIERi) (i = 0 or 1)**

Address: F0274H (TRDIER0), F0284H (TRDIER1) After Reset: 00H [Note]

Symbol	7	6	5	4	3	2	1	0
TRDIERi	—	—	—	OVIE	IMIED	IMIEC	IMIEB	IMIEA

Bits 7 to 5	Nothing is assigned	R/W
—	The write value must be 0. The read value is 0.	R

OVIE	Overflow/underflow interrupt enable	R/W
0	Interrupt by bits OVF and UDF disabled	R/W
1	Interrupt by bits OVF and UDF enabled	

IMIED	Input capture/compare match interrupt enable D	R/W
0	Interrupt by the IMFD bit is disabled	R/W
1	Interrupt by the IMFD bit is enabled	

IMIEC	Input capture/compare match interrupt enable C	R/W
0	Interrupt by the IMFC bit is disabled	R/W
1	Interrupt by the IMFC bit is enabled	

IMIEB	Input capture/compare match interrupt enable B	R/W
0	Interrupt by the IMFB bit is disabled	R/W
1	Interrupt by the IMFB bit is enabled	

IMIEA	Input capture/compare match interrupt enable A	R/W
0	Interrupt by the IMFA bit is disabled	R/W
1	Interrupt by the IMFA bit is enabled	

Note The value after reset is undefined when FRQSEL4 = 1 in the user option byte (000C2H/020C2H) and TRD0EN = 0 in the PER1 register. If it is necessary to read the initial value, set f_{CLK} to f_{IH} and TRD0EN = 1 before reading.

8.2.17 Timer RD PWM Function Output Level Control Register i (TRDPOCRi) (i = 0 or 1)

Settings to the TRDPOCRi register are enabled only in PWM function. When not in PWM function, they are disabled.

Figure 8-28. Format of Timer RD PWM Function Output Level Control Register i (TRDPOCRi) (i= 0 or 1) [PWM Function]

Address: F0275H (TRDPOCR0), F0285H (TRDPOCR1) After Reset: 00H [Note]

Symbol	7	6	5	4	3	2	1	0
TRDPOCRi	—	—	—	—	—	POLD	POLC	POLB

Bits 7 to 3	Nothing is assigned	R/W
—	The write value must be 0. The read value is 0.	R

POLD	PWM function output level control D	R/W
0	TRDIODi output level is low active	R/W
1	TRDIODi output level is high active	

POLC	PWM function output level control C	R/W
0	TRDIOCi output level is low active	R/W
1	TRDIOCi output level is high active	

POLB	PWM function output level control B	R/W
0	TRDIOBi output level is low active	R/W
1	TRDIOBi output level is high active	

Note The value after reset is undefined when FRQSEL4 = 1 in the user option byte (000C2H/020C2H) and TRD0EN = 0 in the PER1 register. If it is necessary to read the initial value, set f_{CLK} to f_{IH} and TRD0EN = 1 before reading.

8.2.18 Timer RD Counter i (TRDi) (i = 0 or 1)

[Timer Mode]

Access the TRDi register in 16-bit units. Do not access it in 8-bit units.

[Reset Synchronous PWM Mode and PWM3 Mode]

Access the TRD0 register in 16-bit units. Do not access it in 8-bit units. The TRD1 register is not used in reset synchronous PWM mode and PWM3 mode.

[Complementary PWM Mode (TRD0)]

Access the TRD0 register in 16-bit units. Do not access it in 8-bit units.

[Complementary PWM Mode (TRD1)]

Access the TRD1 register in 16-bit units. Do not access it in 8-bit units.

Figure 8-29. Format of Timer RD Counter i (TRDi) (i = 0 or 1) [Timer Mode]

Address: F0276H (TRD0), F0286H (TRD1) After Reset: 0000H **Note**

Symbol	15	14	13	12	11	10	9	8	7	6	5	4	3	2	1	0
TRDi	—	—	—	—	—	—	—	—	—	—	—	—	—	—	—	—

—	Function	Setting Range	R/W
Bits 15 to 0	Count the count source. Count operation is incremented. When an overflow occurs, the OVF bit in the TRDSRi register is set to 1.	0000H to FFFFH	R/W

Note The value after reset is undefined when FRQSEL4 = 1 in the user option byte (000C2H/020C2H) and TRD0EN = 0 in the PER1 register. If it is necessary to read the initial value, set f_{CLK} to f_{IH} and TRD0EN = 1 before reading.

<R> **Figure 8-30. Format of Timer RD Counter 0 (TRD0) [Reset Synchronous PWM Mode and PWM3 Mode]**

<R> Address: F0276H (TRD0) After Reset: 0000H **Note**

Symbol	15	14	13	12	11	10	9	8	7	6	5	4	3	2	1	0
<R> TRD0	—	—	—	—	—	—	—	—	—	—	—	—	—	—	—	—

—	Function	Setting Range	R/W
Bits 15 to 0	Count the count source. Count operation is incremented. When an overflow occurs, the OVF bit in the TRDSR0 register is set to 1.	0000H to FFFFH	R/W

Note The value after reset is undefined when FRQSEL4 = 1 in the user option byte (000C2H/020C2H) and TRD0EN = 0 in the PER1 register. If it is necessary to read the initial value, set f_{CLK} to f_{IH} and TRD0EN = 1 before reading.

<R> **Figure 8-31. Format of Timer RD Counter 0 (TRD0) [Complementary PWM Mode (TRD0)]**

<R> Address: F0276H (TRD0) After Reset: 0000H Note

<R>

Symbol	15	14	13	12	11	10	9	8	7	6	5	4	3	2	1	0
TRD0	—	—	—	—	—	—	—	—	—	—	—	—	—	—	—	—

—	Function	Setting Range	R/W
Bits 15 to 0	Dead time must be set. Count the count source. Count operation is incremented or decremented. When an overflow occurs, the OVF bit in the TRDSR0 register is set to 1.	0001H to FFFFH	R/W

Note The value after reset is undefined when FRQSEL4 = 1 in the user option byte (000C2H/020C2H) and TRD0EN = 0 in the PER1 register. If it is necessary to read the initial value, set f_{CLK} to f_{IH} and TRD0EN = 1 before reading.

<R> **Figure 8-32. Format of Timer RD Counter 1 (TRD1) [Complementary PWM Mode (TRD1)]**

<R> Address: F0286H (TRD1) After Reset: 0000H Note

<R>

Symbol	15	14	13	12	11	10	9	8	7	6	5	4	3	2	1	0
TRD1	—	—	—	—	—	—	—	—	—	—	—	—	—	—	—	—

—	Function	Setting Range	R/W
Bits 15 to 0	Set to 0000H. Count the count source. Count operation is incremented or decremented. When an underflow occurs, the UDF bit in the TRDSR1 register is set to 1.	0000H to FFFFH	R/W

Note The value after reset is undefined when FRQSEL4 = 1 in the user option byte (000C2H/020C2H) and TRD0EN = 0 in the PER1 register. If it is necessary to read the initial value, set f_{CLK} to f_{IH} and TRD0EN = 1 before reading.

8.2.19 Timer RD General Registers Ai, Bi, Ci, and Di (TRDGRAi, TRDGRBi,TRDGRCi, TRDGRDi) (i = 0 or 1)

[Input Capture Function]

Access registers TRDGRAi to TRDGRDi in 16-bit units. Do not access them in 8-bit units.

The following registers are disabled in the input capture function:
TRDOER1, TRDOER2, TRDOCR, TRDPOCR0, and TRDPOCR1

Set the pulse width of the input capture signal applied to the TRDIOji pin to three or more cycles of the timer RD operating clock (f_{TRD}) when no digital filter is used (j = A, B, C, or D) (when no digital filter is used).

[Output Compare Function]

Access registers TRDGRAi to TRDGRDi in 16-bit units. Do not access them in 8-bit units.

The following registers are disabled in the output compare function:
TRDDF0, TRDDF1, TRDPOCR0, and TRDPOCR1

[PWM Function]

Access registers TRDGRAi to TRDGRDi in 16-bit units. Do not access them in 8-bit units.

The following registers are disabled in PWM function:
TRDDF0, TRDDF1, TRDIORA0, TRDIORC0, TRDIORA1, and TRDIORC1

[Reset Synchronous PWM Mode]

Access registers TRDGRAi to TRDGRDi in 16-bit units. Do not access them in 8-bit units.

The following registers are disabled in reset synchronous PWM mode:
TRDPMR, TRDOCR [Note], TRDDF0, TRDDF1,TRDIORA0, TRDIORC0, TRDPOCR0, TRDIORA1, TRDIORC1, and TRDPOCR1

Note The TOC0 bit in the TRDOCR register is enabled as an initial output setting of TRDIOC0 in reset synchronous PWM mode and complementary PWM mode.

[Complementary PWM Mode]

Access registers TRDGRAi to TRDGRDi in 16-bit units. Do not access them in 8-bit units.
The TRDGRC0 register is not used in complementary PWM mode.

The following registers are disabled in complementary PWM mode.
TRDPMR, TRDOCR [Note], TRDIORA0, TRDIORC0, TRDPOCR0, TRDIORA1, TRDIORC1, and TRDPOCR1

Note The TOC0 bit in the TRDOCR register is enabled as an initial output setting of TRDIOC0 in reset synchronous PWM mode and complementary PWM mode.

Since values cannot be written to the TRDGRB0, TRDGRA1, or TRDGRB1 register directly after count operation starts (prohibited item), use the TRDGRD0, TRDGRC1, or TRDGRD1 register as a buffer register.

However, to write data to the TRDGRD0, TRDGRC1, or TRDGRD1 register, set bits TRDBFD0, TRDBFC1, and TRDBFD1 to 0 (general register). After this, bits TRDBFD0, TRDBFC1, and TRDBFD1 may be set to 1 (buffer register).

[PWM3 Mode]

Access registers TRDGRAi to TRDGRDi in 16-bit units. Do not access them in 8-bit units.

The following registers are disabled in PWM3 mode:

TRDPMR, TRDDF0, TRDDF1, TRDIORA0, TRDIORC0, TRDPOCR0, TRDIORA1, TRDIORC1, and TRDPOCR1

Registers TRDGRC0, TRDGRC1, TRDGRD0, and TRDGRD1 are not used in PWM3 mode. To use them as buffer registers, set bits TRDBFC0, TRDBFC1, TRDBFD0, and TRDBFD1 to 0 (general register) and write a value to the TRDGRC0, TRDGRC1, TRDGRD0, or TRDGRD1 register. After this, bits TRDBFC0, TRDBFC1, TRDBFD0, and TRDBFD1 may be set to 1 (buffer register).

Figure 8-33. Format of Timer RD General Registers Ai, Bi, Ci, and Di (TRDGRAi, TRDGRBi,TRDGRCi, TRDGRDi) (i = 0 or 1) [Input Capture Function]

Address: F0278H (TRDGRA0), F027AH (TRDGRB0), FFF58H (TRDGRC0), FFF5AH (TRDGRD0), F0288H (TRDGRA1), F028AH (TRDGRB1), FFF5CH (TRDGRC1), FFF5EH (TRDGRD1)

After Reset: FFFFH [Note]

Symbol	15	14	13	12	11	10	9	8	7	6	5	4	3	2	1	0
TRDGRAi	—	—	—	—	—	—	—	—	—	—	—	—	—	—	—	—
TRDGRBi																
TRDGRCi																
TRDGRDi																

—	Function	R/W
Bits 15 to 0	See **Table 8-3 TRDGRji Register Functions in Input Capture Function**.	R/W

Note The value after reset is undefined when FRQSEL4 = 1 in the user option byte (000C2H/020C2H) and TRD0EN = 0 in the PER1 register. If it is necessary to read the initial value, set f_{CLK} to f_{IH} and TRD0EN = 1 before reading.

Table 8-3. TRDGRji Register Functions in Input Capture Function

Register	Setting	Register Function	Input-Capture Input Pin
TRDGRAi	—	General register. The value of the TRDi register can be read at input capture.	TRDIOAi
TRDGRBi			TRDIOBi
TRDGRCi	TRDBFCi = 0	General register. The value of the TRDi register can be read at input capture.	TRDIOCi
TRDGRDi	TRDBFDi = 0		TRDIODi
TRDGRCi	TRDBFCi = 1	Buffer register. The value of the TRDi register can be read at input capture (see **8. 3. 1 (2) Buffer Operation**).	TRDIOAi
TRDGRDi	TRDBFDi = 1		TRDIOBi

Remark i = 0 or 1, j = A, B, C, or D

TRDBFCi, TRDBFDi: Bits in TRDMR register

Figure 8-34. Format of Timer RD General Registers Ai, Bi, Ci, and Di (TRDGRAi, TRDGRBi, TRDGRCi, TRDGRDi) (i = 0 or 1) [Output Compare Function]

Address: F0278H (TRDGRA0), F027AH (TRDGRB0), FFF58H (TRDGRC0), FFF5AH (TRDGRD0), F0288H (TRDGRA1), F028AH (TRDGRB1), FFF5CH (TRDGRC1), FFF5EH (TRDGRD1)

After Reset: FFFFH [Note]

Symbol	15	14	13	12	11	10	9	8	7	6	5	4	3	2	1	0
TRDGRAi TRDGRBi TRDGRCi TRDGRDi	—	—	—	—	—	—	—	—	—	—	—	—	—	—	—	—

—	Function	R/W
Bits 15 to 0	See **Table 8-4 TRDGRji Register Functions in Output Compare Function**.	R/W

Note The value after reset is undefined when FRQSEL4 = 1 in the user option byte (000C2H/020C2H) and TRD0EN = 0 in the PER1 register. If it is necessary to read the initial value, set f_{CLK} to f_{IH} and TRD0EN = 1 before reading.

Table 8-4. TRDGRji Register Functions in Output Compare Function

Register	Setting		Register Function		Output-Compare Output Pin
	TRDBFji	IOj3			
TRDGRAi	—	—	General register. Write the compare value.		TRDIOAi
TRDGRBi					TRDIOBi
TRDGRCi	0	1	General register. Write the compare value.		TRDIOCi
TRDGRDi					TRDIODi
TRDGRCi	1	1	Buffer register. Write the next compare value (see **8. 3. 1 (2) Buffer Operation**).		TRDIOAi
TRDGRDi					TRDIOBi
TRDGRCi	0	0	TRDIOAi output control	(See **8. 3. 3 (2) Changing Output Pins in Registers TRDGRCi (i = 0 or 1) and TRDGRDi**.)	TRDIOAi
TRDGRDi			TRDIOBi output control		TRDIOBi

Caution **When the setting of bits TCK2 to TCK0 in the TRDCRi register is 000B (f_{CLK}, f_{IH}, f_{PLL}, f_{SUB}, and f_{IL}) and the compare value is set to 0000H, a request signal to the data transfer controller (DTC) and the event link controller (ELC) is generated only once immediately after the count starts. When the compare value is 0001H or higher, a request signal is generated each time a compare match occurs.**

Remark i = 0 or 1, j = A, B, C, or D
TRDBFji: Bit in TRDMR register, IOj3: Bit in TRDIORCi register

Figure 8-35. Format of Timer RD General Registers Ai, Bi, Ci, and Di (TRDGRAi, TRDGRBi,TRDGRCi, TRDGRDi) (i = 0 or 1) [PWM Mode]

Address: F0278H (TRDGRA0), F027AH (TRDGRB0), FFF58H (TRDGRC0), FFF5AH (TRDGRD0), F0288H (TRDGRA1), F028AH (TRDGRB1), FFF5CH (TRDGRC1), FFF5EH (TRDGRD1)

After Reset: FFFFH Note

Symbol	15	14	13	12	11	10	9	8	7	6	5	4	3	2	1	0
TRDGRAi TRDGRBi TRDGRCi TRDGRDi	—	—	—	—	—	—	—	—	—	—	—	—	—	—	—	—

—	Function	R/W
Bits 15 to 0	See **Table 8-5 TRDGRji Register Functions in PWM Function**.	R/W

Note The value after reset is undefined when FRQSEL4 = 1 in the user option byte (000C2H/020C2H) and TRD0EN = 0 in the PER1 register. If it is necessary to read the initial value, set f_{CLK} to f_{IH} and TRD0EN = 1 before reading.

Table 8-5. TRDGRji Register Functions in PWM Function

Register	Setting	Register Function	PWM Output Pin
TRDGRAi	—	General register. Set the PWM period.	—
TRDGRBi	—	General register. Set the changing point of PWM output.	TRDIOBi
TRDGRCi	TRDBFCi = 0	General register. Set the changing point of PWM output.	TRDIOCi
TRDGRDi	TRDBFDi = 0		TRDIODi
TRDGRCi	TRDBFCi = 1	Buffer register. Set the next PWM period (see **8. 3. 1 (2) Buffer Operation**).	—
TRDGRDi	TRDBFDi = 1	Buffer register. Set the changing point of the next PWM output (see **8. 3. 1 (2) Buffer Operation**).	TRDIOBi

Caution When the setting of bits TCK2 to TCK0 in the TRDCRi register is 000B (f_{CLK}, f_{IH}, f_{PLL}, f_{SUB}, and f_{IL}) and the compare value is set to 0000H, a request signal to the data transfer controller (DTC) and the event link controller (ELC) is generated only once immediately after the count starts. When the compare value is 0001H or higher, a request signal is generated each time a compare match occurs.

Remark i = 0 or 1, j = A, B, C, or D
TRDBFCi, TRDBFDi: Bits in TRDMR register

Figure 8-36. Format of Timer RD General Registers Ai, Bi, Ci, and Di (TRDGRAi, TRDGRBi,TRDGRCi, TRDGRDi) (i = 0 or 1) [Reset Synchronous PWM Mode]

Address: F0278H (TRDGRA0), F027AH (TRDGRB0), FFF58H (TRDGRC0), FFF5AH (TRDGRD0), F0288H (TRDGRA1), F028AH (TRDGRB1), FFF5CH (TRDGRC1), FFF5EH (TRDGRD1)

After Reset: FFFFH Note

Symbol	15	14	13	12	11	10	9	8	7	6	5	4	3	2	1	0
TRDGRAi TRDGRBi TRDGRCi TRDGRDi	—	—	—	—	—	—	—	—	—	—	—	—	—	—	—	—

—	Function	R/W
Bits 15 to 0	See **Table 8-6 TRDGRji Register Functions in Reset Synchronous PWM Mode**.	R/W

Note The value after reset is undefined when FRQSEL4 = 1 in the user option byte (000C2H/020C2H) and TRD0EN = 0 in the PER1 register. If it is necessary to read the initial value, set f_{CLK} to f_{IH} and TRD0EN = 1 before reading.

Table 8-6. TRDGRji Register Functions in Reset Synchronous PWM Mode

Register	Setting	Register Function	PWM Output Pin
TRDGRA0	—	General register. Set the PWM period.	(TRDIOC0, output inverted every PWM period)
TRDGRB0	—	General register. Set the changing point of PWM1 output.	TRDIOB0 TRDIOD0
TRDGRC0	TRDBFC0 = 0	(Not used in reset synchronous PWM mode.)	—
TRDGRD0	TRDBFC0 = 0		
TRDGRA1	—	General register. Set the changing point of PWM2 output.	TRDIOA1 TRDIOC1
TRDGRB1	—	General register. Set the changing point of PWM3 output.	TRDIOB1 TRDIOD1
TRDGRC1	TRDBFC1= 0	(Not used in reset synchronous PWM mode.)	—
TRDGRD1	TRDBFD1 = 0		
TRDGRC0	TRDBFC0 = 1	Buffer register. Set the next PWM period (see **8. 3. 1 (2) Buffer Operation**).	(TRDIOC0, output inverted every PWM period)
TRDGRD0	TRDBFD0 = 1	Buffer register. Set the changing point of the next PWM1 (see **8. 3. 1 (2) Buffer Operation**).	TRDIOB0 TRDIOD0
TRDGRC1	TRDBFC1 = 1	Buffer register. Set the changing point of the next PWM2 (see **8. 3. 1 (2) Buffer Operation**).	TRDIOA1 TRDIOC1
TRDGRD1	TRDBFD1 = 1	Buffer register. Set the changing point of the next PWM3 (see **8. 3. 1 (2) Buffer Operation**).	TRDIOB1 TRDIOD1

Caution When the setting of bits TCK2 to TCK0 in the TRDCR0 register is 000B (f_{CLK}, f_{IH}, f_{PLL}, f_{SUB}, and f_{IL}) and the compare value is set to 0000H, a request signal to the data transfer controller (DTC) and the event link controller (ELC) is generated only once immediately after the count starts. When the compare value is 0001H or higher, a request signal is generated each time a compare match occurs.

Remark i = 0 or 1, j = A, B, C, or D
TRDBFC0, TRDBFD0, TRDBFC1, TRDBFD1: Bits in TRDMR register

Figure 8-37. Format of Timer RD General Registers Ai, Bi, Ci, and Di (TRDGRAi, TRDGRBi,TRDGRCi, TRDGRDi) (i = 0 or 1) [Complementary PWM Mode]

Address: F0278H (TRDGRA0), F027AH (TRDGRB0), FFF58H (TRDGRC0), FFF5AH (TRDGRD0), F0288H (TRDGRA1), F028AH (TRDGRB1), FFF5CH (TRDGRC1), FFF5EH (TRDGRD1)

After Reset: FFFFH Note

Symbol	15	14	13	12	11	10	9	8	7	6	5	4	3	2	1	0
TRDGRAi TRDGRBi TRDGRCi TRDGRDi	—	—	—	—	—	—	—	—	—	—	—	—	—	—	—	—

—	Function	R/W
Bits 15 to 0	See **Table 8-7 TRDGRji Register Functions in Complementary PWM Mode**.	R/W

Note The value after reset is undefined when FRQSEL4 = 1 in the user option byte (000C2H/020C2H) and TRD0EN = 0 in the PER1 register. If it is necessary to read the initial value, set f_{CLK} to f_{IH} and TRD0EN = 1 before reading.

Table 8-7. TRDGRji Register Functions in Complementary PWM Mode

Register	Setting	Register Function	PWM Output Pin
TRDGRA0	—	General register. Set the PWM period at initialization. Setting range: ≥ Value set in TRD0 register ≤ FFFFh - value set in TRD0 register Do not write to this register when bits TSTART0 and TSTART1 in the TRDSTR register are set to 1 (count starts).	(TRDIOC0, output inverted every half period)
TRDGRB0	—	General register. Set the changing point of PWM1 output at initialization. Setting range: ≥ Value set in TRD0 register ≤ Value set in TRDGRA0 register - value set in TRD0 register Do not write to this register when bits TSTART0 and TSTART1 in the TRDSTR register are set to 1 (count starts).	TRDIOB0 TRDIOD0
TRDGRA1	—	General register. Set the changing point of PWM2 output at initialization. Setting range: ≥ Value set in TRD0 register ≤ Value set in TRDGRA0 register - value set in TRD0 register Do not write to this register when bits TSTART0 and TSTART1 in the TRDSTR register are set to 1 (count starts).	TRDIOA1 TRDIOC1
TRDGRB1	—	General register. Set the changing point of PWM3 output at initialization. Setting range: ≥ Value set in TRD0 register ≤ Value set in TRDGRA0 register - value set in TRD0 register Do not write to this register when bits TSTART0 and TSTART1 in the TRDSTR register are set to 1 (count starts).	TRDIOB1 TRDIOD1
TRDGRC0	—	(Not used in complementary PWM mode.)	—
TRDGRD0	TRDBFD0 = 1	Buffer register. Set the changing point of next PWM1 output (see **8. 3. 1 (2) Buffer Operation**). Setting range: ≥ Value set in TRD0 register ≤ Value set in TRDGRA0 register - value set in TRD0 register Set this register to the same value as the TRDGRB0 register for initialization.	TRDIOB0 TRDIOD0
TRDGRC1	TRDBFC1 = 1	Buffer register. Set the changing point of next PWM2 output (see **8. 3. 1 (2) Buffer Operation**). Setting range: ≥ Value set in TRD0 register ≤ Value set in TRDGRA0 register - value set in TRD0 register Set this register to the same value as the TRDGRA1 register for initialization.	TRDIOA1 TRDIOC1
TRDGRD1	TRDBFD1 = 1	Buffer register. Set the changing point of next PWM3 output (see **8. 3. 1 (2) Buffer Operation**). Setting range: ≥ Value set in TRD0 register ≤ Value set in TRDGRA0 register - value set in TRD0 register Set this register to the same value as the TRDGRB1 register for initialization.	TRDIOB1 TRDIOD1

Caution When the setting of bits TCK2 to TCK0 in the TRDCRi register is 000B (f_{CLK}, f_{IH}, f_{PLL}, f_{SUB}, and f_{IL}) and the compare value is set to 0000H, a request signal to the data transfer controller (DTC) and the event link controller (ELC) is generated only once immediately after the count starts. When the compare value is 0001H or higher, a request signal is generated each time a compare match occurs.

Remark i = 0 or 1, j = A, B, C, or D
TRDBFD0, TRDBFC1, TRDBFD1: Bits in TRDMR register

Figure 8-38. Format of Timer RD General Registers Ai, Bi, Ci, and Di (TRDGRAi, TRDGRBi,TRDGRCi, TRDGRDi) (i = 0 or 1) [PWM3 Mode]

Address: F0278H (TRDGRA0), F027AH (TRDGRB0), FFF58H (TRDGRC0), FFF5AH (TRDGRD0), F0288H (TRDGRA1), F028AH (TRDGRB1), FFF5CH (TRDGRC1), FFF5EH (TRDGRD1)

After Reset: FFFFH [Note]

Symbol	15	14	13	12	11	10	9	8	7	6	5	4	3	2	1	0
TRDGRAi TRDGRBi TRDGRCi TRDGRDi	—	—	—	—	—	—	—	—	—	—	—	—	—	—	—	—

—	Function	R/W
Bits 15 to 0	See **Table 8-8 TRDGRji Register Functions in PWM3 Mode**.	R/W

Note The value after reset is undefined when FRQSEL4 = 1 in the user option byte (000C2H/020C2H) and TRD0EN = 0 in the PER1 register. If it is necessary to read the initial value, set f_{CLK} to f_{IH} and TRD0EN = 1 before reading.

Table 8-8. TRDGRji Register Functions in PWM3 Mode

Register	Setting	Register Function	PWM Output Pin
TRDGRA0	—	General register. Set the PWM period . Setting range: ≥ Value set in TRDGRA1 register	TRDIOA0
TRDGRA1	—	General register. Set the changing point (active level timing) of PWM output Setting range: ≤ Value set in TRDGRA0 register	—
TRDGRB0	—	General register. Set the changing point (the timing for returning to initial output level) of PWM output. Setting range: ≥ Value set in TRDGRB1 register and ≤ Value set in TRDGRA0 register	TRDIOB0
TRDGRB1	—	General register. Set the changing point (active level timing) of PWM output Setting range: ≤ Value set in TRDGRB0 register	—
TRDGRC0	TRDBFC0 = 0	(Not used in PWM3 mode.)	—
TRDGRC1	TRDBFC1 = 0		
TRDGRD0	TRDBFD0 = 0		
TRDGRD1	TRDBFD1 = 0		
TRDGRC0	TRDBFC0 = 1	Buffer register. Set the next PWM period (see **8. 3. 1 (2) Buffer Operation**). Setting range: ≥ Value set in TRDGRC1 register	TRDIOA0
TRDGRC1	TRDBFC1 = 1	Buffer register. Set the changing point of next PWM output (see **8. 3. 1 (2) Buffer Operation**). Setting range: ≤ Value set in TRDGRC0 register	—
TRDGRD0	TRDBFD0 = 1	Buffer register. Set the changing point of next PWM output (see **8. 3. 1 (2) Buffer Operation**). Setting range: ≥ Value set in TRDGRD1 register and ≤ Value set in TRDGRC0 register	TRDIOB0
TRDGRD1	TRDBFD1 = 1	Buffer register. Set the changing point of next PWM output (see **8. 3. 1 (2) Buffer Operation**). Setting range: ≤ Value set in TRDGRD0 register	—

Caution When the setting of bits TCK2 to TCK0 in the TRDCR0 register is 000B (f_{CLK}, f_{IH}, f_{PLL}, f_{SUB}, and f_{IL}) and the compare value is set to 0000H, a request signal to the data transfer controller (DTC) and the event link controller (ELC) is generated only once immediately after the count starts. When the compare value is 0001H or higher, a request signal is generated each time a compare match occurs.

Remark i = 0 or 1, j = A, B, C, or D
TRDBFC0, TRDBFD0, TRDBFC1, TRDBFD1: Bits in TRDMR register

8.2.20 PWM Output Delay Control Register 0 (PWMDLY0)

This register controls output delay of PWM output signal output from the TRDIOj0 and TRDIOj1 pins.

Set the PWMDLY0 register by a 16-bit memory manipulation instruction.

Reset signal generation clears this register to 0000H.

PWMDLY0 register

Address: F0229H After Reset: 00H R/W

	15	14	13	12	11	10	9	8
PWMDLY0	TRDD11[Note]	TRDD10[Note]	TRDC11[Note]	TRDC10[Note]	TRDB11	TRDB10	TRDA11	TRDA10
Initial value	0	0	0	0	0	0	0	0
R/W	R/W	R/W	R/W	R/W	R/W	R/W	R/W	R/W

Address: F0228H After Reset: 00H R/W

	7	6	5	4	3	2	1	0
PWMDLY0	TRDD01	TRDD00	TRDC01	TRDC00	TRDB01	TRDB00	TRDA01	TRDA00
Initial value	0	0	0	0	0	0	0	0
R/W	R/W	R/W	R/W	R/W	R/W	R/W	R/W	R/W

Table 8-9. PWM Output Delay Period Control by TRDIOj1 of Timer RD1

TRDj11	TRDj10	PWM Output Delay Control by TRDIOj1 of Timer RD1
0	0	No delay.
0	1	TRDIOj1 signal delayed by one cycle of the timer RD operating clock (f_{TRD}).
1	0	TRDIOj1 signal delayed by two cycles of the timer RD operating clock (f_{TRD}).
1	1	TRDIOj1 signal delayed by three cycles of the timer RD operating clock (f_{TRD}).

j = A, B, C, or D

Table 8-10. PWM Output Delay Period Control by TRDIOj0 of Timer RD0

TRDj01	TRDj00	PWM Output Delay Control by TRDIOj0 of Timer RD0
0	0	No delay.
0	1	TRDIOj0 signal delayed by one cycle of the timer RD operating clock (f_{TRD}).
1	0	TRDIOj0 signal delayed by two cycles of the timer RD operating clock (f_{TRD}).
1	1	TRDIOj0 signal delayed by three cycles of the timer RD operating clock (f_{TRD}).

j = A, B, C, or D

Note If this register is set for a delay, this affects PWM outputs of TRDIOC1 and TRDIOD1, but doesn't affect the operation of the timer output signal to internally connected peripheral functions.

Cautions 1. Set the PWMDLY0 register before outputting a PWM signal.

2. Access the PWMDLY0 register in 16 bits. 1-bit access and 8-bit access are prohibited.

3. If this register is not used for PWM output, it should be cleared to 0. This is because the timer output is delayed by the output delay setting shown above even when the timer output mode other than PWM output mode is selected.

4. When setting this register after the PWM output is stopped, wait for four cycles of the timer RD operating clock (f_{TRD}) before the setting.

5. When using SNZOUT, set TRDC0n to 0 before entering STOP mode (n = 0, 1).

6. Even if this register is set for a delay, this doesn't affect the operation of other pin functions multiplexed on the same pin as the TRDIOji pin function (j = A, B, C, D, i = 0, 1).

8.2.21 Port mode registers (PM1, PM3, PM12)

These registers set input/output of port in 1-bit units. PM1, PM3, and PM12 are used in timer RD.

When using the ports (P13/TRDIOA0, P16/TRDIOC1, etc.) to be shared with the timer output pin for timer output, set the bit in the port mode register (PMxx) and the bit in the port register (Pxx) corresponding to each port to 0.

Example: When using P13/TRDIOA0 for timer output
Set the PM13 bit of port mode register 1 to 0.
Set the P13 bit of port register 1 to 0.

When using the ports (P13/TRDIOA0, P16/TRDIOC1, etc.) to be shared with the timer input pin for timer input, set the bit in the port mode register (PMxx) corresponding to each port to 1. At this time, the bit in the port register (Pxx) may be 0 or 1.

Example: When using P13/TRDIOA0 for timer input
Set the PM13 bit of port mode register 1 to 1.
Set the P13 bit of port register 1 to 0 or 1.

The PM1, PM3, and PM12 registers can be set by a 1-bit or 8-bit memory manipulation instruction.
Reset signal generation sets this register to FFH.

Figure 8-39. Format of Port Mode Registers (PM1, PM3, PM12) (100-pin products)

Address: FFF21H After reset: FFH R/W

Symbol	7	6	5	4	3	2	1	0
PM1	PM17	PM16	PM15	PM14	PM13	PM12	PM11	PM10

Address: FFF23H After reset: FFH R/W

Symbol	7	6	5	4	3	2	1	0
PM3	1	1	1	PM34	PM33	PM32	PM31	PM30

Address: FFF2CH After reset: FFH R/W

Symbol	7	6	5	4	3	2	1	0
PM12	PM127	PM126	PM125	1	1	1	1	PM120

PMmn	Pmn pin I/O mode selection (m = 1, 3, 12; n = 0 to 7)
0	Output mode (output buffer on)
1	Input mode (output buffer off)

Remark The figure shown above presents the format of port mode registers of the 100-pin products.

8.3 Operation

8.3.1 Items Common to Multiple Modes

(1) Count Sources

The count source selection method is the same in all modes. However, the external clock cannot be selected in PWM3 mode.

Table 8-11. Count Source Selection

Count Source	Selection
f_{CLK}, $f_{CLK}/2$, $f_{CLK}/4$, $f_{CLK}/8$, $f_{CLK}/32$	The FRQSEL4 bit in the user option byte (000C2H/020C2H) is cleared to 0 and the PLLDIV1 bit in the PLL control register (PLLCTL) is cleared to 0, or the SELPLLS bit in the PLL status register (PLLSTS) is cleared to 0 and the TRD_CKSEL bit in the clock select register (CKSEL) is cleared to 0. A count source is selected by bits TCK2 to TCK0 in the TRDCRi register.
f_{IH}	The MCM0 bit in the clock system control register (CKC) is cleared to 0, the SELPLL bit in the PLL control register (PLLCTL) is cleared to 0, the FRQSEL4 bit in the user option byte (000C2H/020C2H) is set to 1, and the TRD_CKSEL bit in the clock select register (CKSEL) is cleared to 0. A count source is selected by bits TCK2 to TCK0 in the TRDCRi register.
f_{PLL}	The SELPLL bit in the PLL control register (PLLCTL) is set to 1, the PLLDIV1 bit in the PLL control register (PLLCTL) is set to 1, the SELPLLS bit in the PLL status register (PLLSTS) is set to 1, and the TRD_CKSEL bit in the clock select register (CKSEL) is cleared to 0. The count source is selected by bits TCK2 to TCK0 in the TRDCRi register.
f_{SUB}	The SELLOSC bit in the clock select register (CKSEL) is cleared to 0 and the TRD_CKSEL bit in the clock select register (CKSEL) is set to 1. A count source is selected by bits TCK2 to TCK0 in the TRDCRi register.
f_{IL}	The SELLOSC bit in the clock select register (CKSEL) is set to 1 and the TRD_CKSEL bit in clock select register (CKSEL) is set to 1. A count source is selected by bits TCK2 to TCK0 in the TRDCRi register.
External signal input to TRDCLK0 pin	The STCLK bit in the TRDFCR register is set to 1 (external clock input enabled). Bits TCK2 to TCK0 in the TRDCRi register are set to 101B. The active edge is selected by bits CKEG1 and CKEG0 in the TRDCRi register. The PM bit in the PM register of the port used as a TRDCLK0 pin is set to 1 (input mode).

Remark i = 0 or 1

Notes on count source setting is described below.

Notes on Count Source Setting of Timer RD

Count Source	Notes on Setting
f_{CLK}, $f_{CLK}/2$, $f_{CLK}/4$, $f_{CLK}/8$, $f_{CLK}/32$	Set the TRD_CKSEL bit in the CKSEL register to 0 (f_{CLK}/f_{MP} is selected), the FRQSEL4 bit in the user option byte (000C2H/020C2H) to 0 ($f_{IH} \leq 32$ MHz), and the PLLDIV1 bit in the PLLCTL register to 0 ($f_{PLL} \leq 32$ MHz). Do not set $f_{CLK}/2$, $f_{CLK}/4$, $f_{CLK}/8$, or $f_{CLK}/32$ when FRQSEL4 = 1. The count sources cannot be used when SNOOZE status is output.
f_{IH}, f_{PLL}	When f_{IH}/f_{PLL} (64 MHz or 48 MHz) or f_{PLL} (over 32 MHz) is used, set the CSS bit in the CKC register to 0 ($f_{CLK} = f_{MP}$ is selected). When f_{IH}/f_{PLL} (64 MHz or 48 MHz) is used, set bits MDIV2 to MDIV0 in the MDIV register to 001B ($f_{MP}/2$ is selected) When f_{IH}/f_{PLL} (64 MHz or 48 MHz) or f_{PLL} (over 32 MHz) is used, set the TRD_CKSEL bit in the CKSEL register to 0 (f_{CLK}/f_{MP} is selected). When f_{IH}/f_{PLL} (64 MHz or 48 MHz) or f_{PLL} (over 32 MHz) is used, set the CSS bit, MDIV2 to MDIV0 bits, and TRD_CKSEL bit before setting the TRD0EN bit in the PER1 register. Set the f_{CLK} to the clock source which is same as the count source before setting bit 4 (TRD0EN) in the peripheral enable register 1 (PER1). Setting the FRQSEL4 bit in the user option byte (000C2H/020C2H) to 1 (f_{IH} = 64 MHz/48 MHz) and the PLLDIV bit in the PLLCTL register to 1 (f_{PLL} > 32 MHz) is prohibited. The count sources cannot be used when SNOOZE status is output.
f_{SUB}, f_{IL}	When the CPU accesses the timer RD register, set the CSS bit in the CKC register to 1 ($f_{CLK} = f_{SL}$ is selected). Set the f_{CLK} to the clock source which is same as the count source before setting bit 4 (TRD0EN) in the peripheral enable register 1 (PER1). The count sources should be set when SNOOZE status is output.

Figure 8-40. Count Source Block Diagram

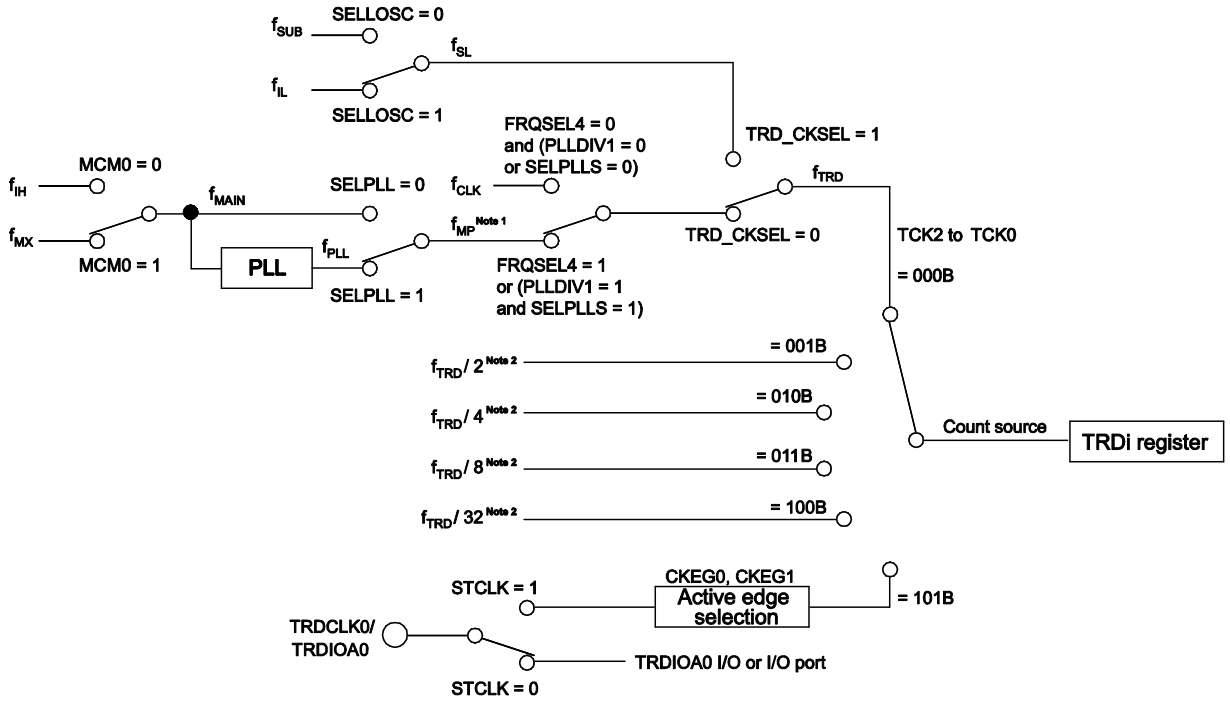

<R> **Notes 1.** f_{IH} can be selected even when it is 64 MHz or 48 MHz. f_{PLL} can be selected when it is over 32 MHz.

2. With this setting, select f_{CLK} as the timer RD operating clock (f_{TRD}).

Remark i = 0 or 1

TCK0 to TCK2, CKEG0, CKEG1: Bits in TRDCRi register

STCLK: Bit in TRDFCR register

<R> FRQSEL4: Bit in user option byte (000C2H/020C2H)

MCM0: Bit in CKC register

SELPLL: Bit in PLLCTL register

PLLDIV1: Bit in PLLCTL register

SELPLLS: Bit in PLLSTS register

SELLOSC: Bit in CKSEL register

<R> TRD_CKSEL: Bit in CKSEL register

Set the pulse width of the external clock applied to the TRDCLK0 pin to three or more cycles of the timer RD operating clock (f_{TRD}).

(2) Buffer Operation

The TRDGRCi register (i = 0 or 1) can be used as the buffer register for the TRDGRAi register, and the TRDGRDi register can be used as the buffer register for the TRDGRBi register by means of bits TRDBFCi and TRDBFDi in the TRDMR register.

- TRDGRAi buffer register: TRDGRCi register
- TRDGRBi buffer register: TRDGRDi register

Buffer operation depends on the mode. Table 8-12 lists the Buffer Operation in Each Mode.

Table 8-12. Buffer Operation in Each Mode

Function and Mode		Transfer Timing	Transfer Register
Timer mode	Input capture function	Input capture signal input	Transfer content of TRDGRAi (TRDGRBi) register to buffer register
	Output compare function	Compare match with TRDi register and TRDGRAi (TRDGRBi) register	Transfer content of buffer register to TRDGRAi (TRDGRBi) register
	PWM function		
Reset synchronous PWM mode		Compare match with TRD0 register and TRDGRA0 register	Transfer content of buffer register to TRDGRAi (TRDGRBi) register
Complementary PWM mode		Compare match with TRD0 register and TRDGRA0 register TRD1 register underflow	Transfer content of buffer register to registers TRDGRB0, TRDGRA1, and TRDGRB1
PWM3 mode		Compare match with TRD0 register and TRDGRA0 register	Transfer content of buffer register to TRDGRAi (TRDGRBi) register

Remark i = 0 or 1

Figure 8-41. Buffer Operation in Input Capture Function

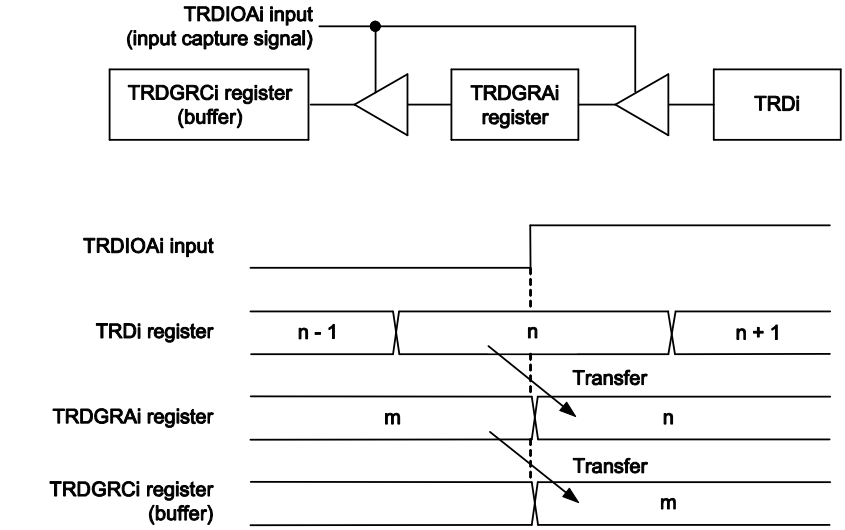

Remark
i = 0 or 1

The above diagram applies under the following conditions:
• The TRDBFCi bit in the TRDMR register is set to 1 (TRDGRCi register is buffer register for TRDGRAi register).
• Bits IOA2 to IOA0 in the TRDIORAi register are set to 100B (input capture at the rising edge).

Figure 8-42. Buffer Operation in Output Compare Function

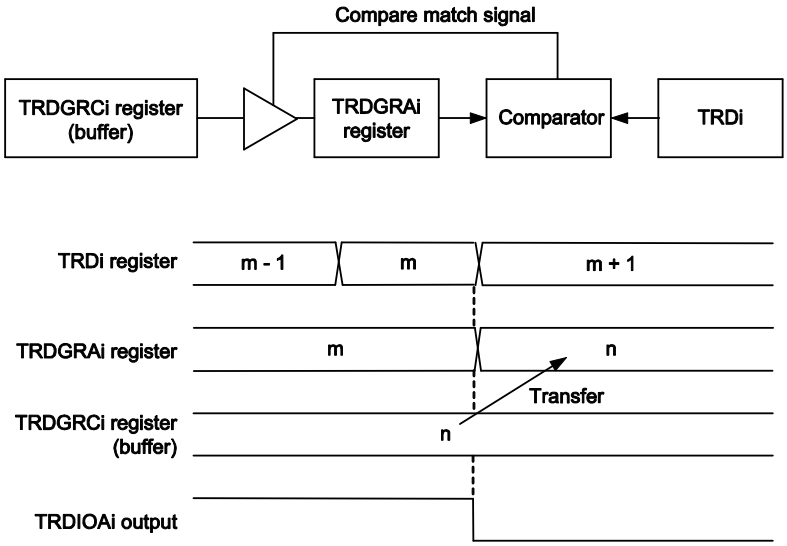

Remark
i = 0 or 1

The above diagram applies under the following conditions:
• The TRDBFCi bit in the TRDMR register is set to 1 (TRDGRCi register is buffer register for TRDGRAi register).
• Bits IOA2 to IOA0 in the TRDIORAi register are set to 001B (low output by compare match).

Perform the following for the timer mode (input capture and output compare functions).
When using the TRDGRCi (i = 0 or 1) register as the buffer register for the TRDGRAi register

- Set the IOC3 bit in the TRDIORCi register to 1 (general register or buffer register).
- Set the IOC2 bit in the TRDIORCi register to the same value as the IOA2 bit in the TRDIORAi register.

When using the TRDGRDi register as the buffer register for the TRDGRBi register

- Set the IOD3 bit in the TRDIORCi register to 1 (general register or buffer register).
- Set the IOD2 bit in the TRDIORCi register to the same value as the IOB2 bit in the TRDIORAi register.

In the input capture function, when the TRDGRCi register or TRDGRDi register is used as a buffer register, the IMFC bit or IMFD bit in the TRDSRi register is set to 1 at the input edge of the TRDIOCi pin or TRDIODi pin.

When also using registers TRDGRCi and TRDGRDi as buffer registers for the output compare function, PWM function, reset synchronous PWM mode, complementary PWM mode, and PWM3 mode, bits IMFC and IMFD in the TRDSRi register are set to 1 by a compare match with the TRDi register.

(3) Synchronous Operation

The TRD1 register is synchronized with the TRD0 register

- Synchronous preset

  When the TRDSYNC bit in the TRDMR register is set to 1 (synchronous operation), the data is written to both the TRD0 and TRD1 registers after writing to the TRDi register.

- Synchronous clear

  When the TRDSYNC bit is 1 and bits CCLR2 to CCLR0 in the TRDCR0 register are 011B (synchronous clear), the TRD0 register is set to 0000H at the same time as the TRD1 register is set to 0000H.

  Also, when the TRDSYNC bit is 1 and bits CCLR2 to CCLR0 are 011B (synchronous clear), the TRD1 register is set to 0000H at the same time as the TRD0 register is set to 0000H.

Figure 8-43. Synchronous Operation

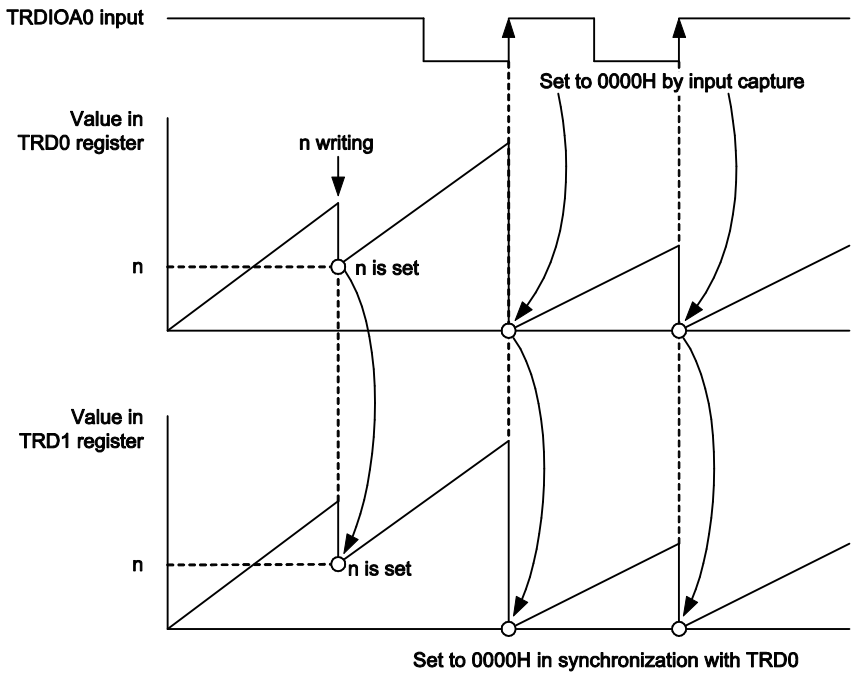

The above diagram applies under the following conditions:

- The TRDSYNC bit in the TRDMR register is set to 1 (synchronous operation).
- Bits CCLR2 to CCLR0 in the TRDCR0 register are set to 001B (TRD0 is set to 0000H by input capture).
  Bits CCLR2 to CCLR0 in the TRDCR1 register are set to 011B (TRD1 is set to 0000H in synchronization with TRD0).
- Bits IOA2 to IOA0 in the TRDIORA0 register are set to 100B.
- Bits CMD1 to CMD0 in the TRDFCR register are set to 00B.
  The PWM 3 bit in the TRDFCR register is set to 1.

  } (Input capture at the rising edge of TRDIOA0 input)

(4) Pulse Output Forced Cutoff

In the PWM function, reset synchronous PWM mode, complementary PWM mode, and PWM3 mode, the TRDIOji output pin (i = 0 or 1, j = A, B, C, or D) can be forcibly set to an I/O port by the INTP0 pin input, and pulse output can be cut off.

The pins used for output in these functions or modes can function as the output pin of timer RD when the corresponding bit in the TRDOER1 register is set to 0 (timer RD output enabled). When the TRDPTO bit in the TRDOER2 register is 1 (pulse output forced cutoff signal input INTP0 enabled), the output pin used as a timer RD output port outputs the output value set by the DFCK1, DFCK0, PENB1, PENB0, DFD, DFC, DFB, or DFA bit in the TRDDF0 or TRDDF1 register.

Make the following settings to use this function:

- Set the pin state when the pulse output is forcibly cut off (high impedance, low output, or high output) using TRDDFi.
- Refer to **8.3.1 (5) Event Input from Event Link Controller (ELC)** for details on pulse forced cutoff by ELC **Note** event input.
- When pulse output is forcibly cut out, the TRDSHUTS bit in the TRDOER2 register is set to 1. To suspend the forced cutoff of the pulse output, set the TRDSHUTS bit to 0 while the count is stopped (TSTARTi = 0).
- Set the TRDPTO bit in the TRDOER2 register to 1 (pulse output forced cutoff signal input INTP0 enabled).

Note The ELC is only available in the RL78/F14.

Figure 8-44. Pulse Output Forced Cutoff

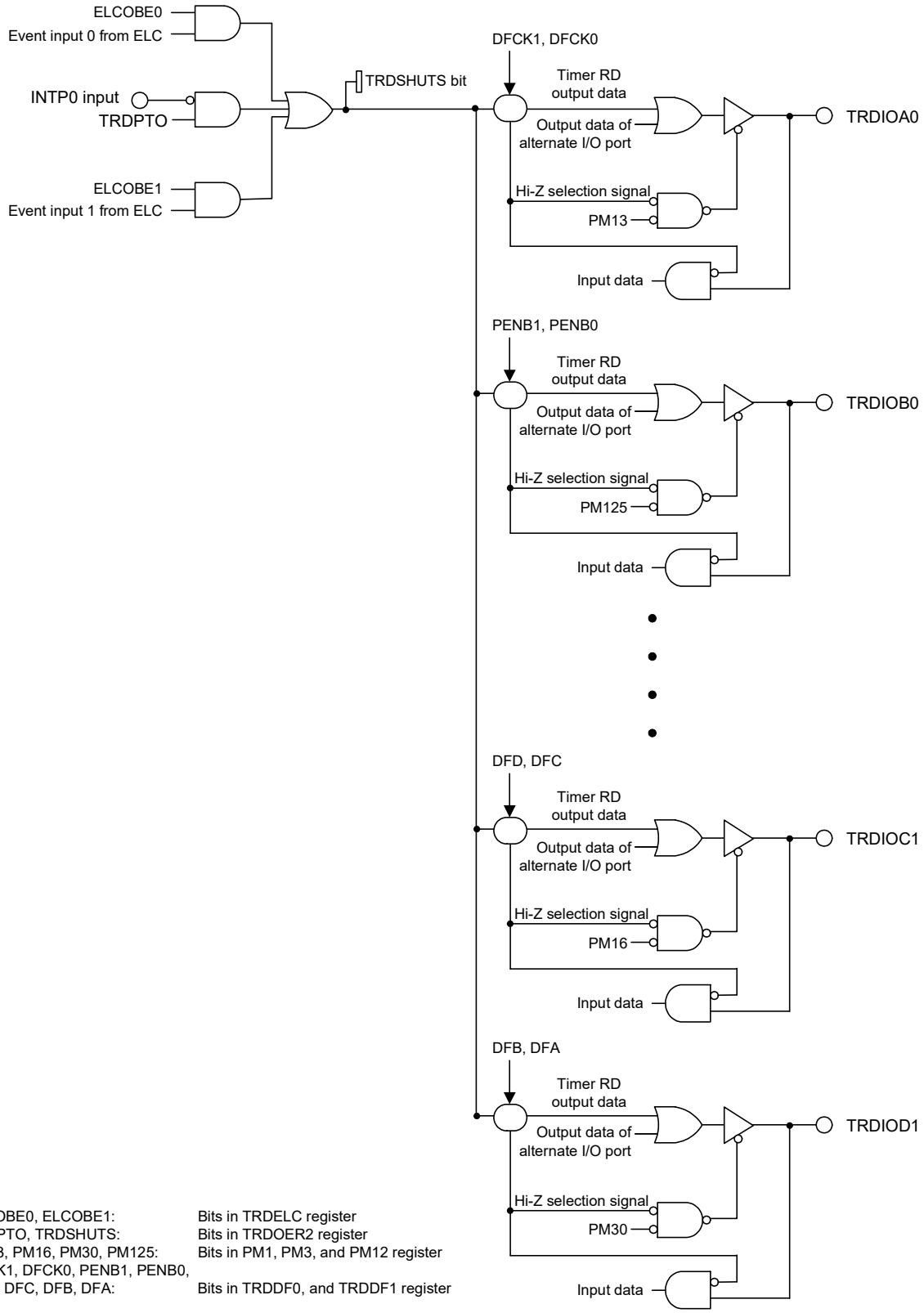

ELCOBE0, ELCOBE1:	Bits in TRDELC register
TRDPTO, TRDSHUTS:	Bits in TRDOER2 register
PM13, PM16, PM30, PM125:	Bits in PM1, PM3, and PM12 register
DFCK1, DFCK0, PENB1, PENB0, DFD, DFC, DFB, DFA:	Bits in TRDDF0, and TRDDF1 register

(5) Event Input from Event Link Controller (ELC)

Timer RD performs two operations by event input from the ELC.

The ELC is only available in the RL78/F14.

(a) Input capture operation D0/D1

Timer RD performs input capture operation D0/D1 by event input from the ELC. The IMFD bit in the TRDSRi register is set to 1 at this time. To use this function, select the input capture function in timer mode and set the ELCICE0 or ELCICE1 bit in the TRDELC register to 1. This function is disabled in any other modes (for the output compare function in timer mode, PWM function, reset synchronous PWM mode, complementary PWM mode, and PWM3 mode).

(b) Pulse output forced cutoff operation Note

The pulse output is forcibly cutoff by event input from the ELC. To use this function, select pulse output mode (PWM function, reset synchronous PWM mode, complementary PWM mode, or PWM3 mode) and set the ELCOBE0 or ELCOBE1 bit to 1. This function is disabled for the input capture function in timer mode.

Note The pulse output is cutoff during the low input period for forced cutoff from the INTP0 pin, but the pulse output is cutoff once by a single event input from the ELC for forced cutoff by the ELC event.

[Setting Procedure]

(1) Set timer RD as the ELC event link destination.

(2) Set bits ELCICEi (i = 0 or 1) and ELCOBEi (i = 0 or 1) to 1 in the TRDELC register.

(6) Event Output to Event Link Controller (ELC)/DTC/A/D Converter Trigger Select Register 0 (ADTRGS0)

Table 8-13 lists the Timer RD Modes and Event Output to ELC/DTC/ADTRGS0 register.

Table 8-13. Timer RD Modes and Event Output to ELC/DTC/ADTRGS0 Register

Used Mode	Output Source	ELC Note 1	DTC	ADTRGS0 register Note 2
Input capture function	TRDIOA0 edge detection set by bits IOA1 and IOA0 in the TRDIORA0 register	Available	Available	-
	TRDIOB0 edge detection set by bits IOB1 and IOB0 in the TRDIORA0 register	Available	Available	Available
	TRDIOC0 edge detection set by bits IOC1 and IOC0 in the TRDIORC0 register	-	Available	-
	TRDIOD0 edge detection set by bits IOD1 and IOD0 in the TRDIORC0 register	-	Available	-
	TRDIOA1 edge detection set by bits IOA1 and IOA0 in the TRDIORA1 register	Available	Available	-
	TRDIOB1 edge detection set by bits IOB1 and IOB0 in the TRDIORA1 register	Available	Available	-
	TRDIOC1 edge detection set by bits IOC1 and IOC0 in the TRDIORC1 register	-	Available	-
	TRDIOD1 edge detection set by bits IOD1 and IOD0 in the TRDIORC1 register	-	Available	-
Output compare function, PWM function, reset synchronous PWM mode, complementary PWM mode, and PWM3 mode	Compare match between registers TRD0 and TRDGRA0	Available	Available	-
	Compare match between registers TRD0 and TRDGRB0	Available	Available	Available
	Compare match between registers TRD0 and TRDGRC0	-	Available	-
	Compare match between registers TRD0 and TRDGRD0	-	Available	-
	Compare match between registers TRD1 and TRDGRA1	Available	Available	-
	Compare match between registers TRD1 and TRDGRB1	Available	Available	-
	Compare match between registers TRD1 and TRDGRC1	-	Available	-
	Compare match between registers TRD1 and TRDGRD1	-	Available	-
Complementary PWM mode	TRD1 register underflow	Available	-	-

Notes 1. The ELC is only available in the RL78/F14.

2. The A/D converter trigger select register 0 (ADTRGS0) is only available in the RL78/F13 (LIN incorporated) and RL78/F13 (CAN and LIN incorporated).

8.3.2 Input Capture Function

The input capture function measures the external signal width and period. The content of the TRDi register (counter) is transferred to the TRDGRji register as a trigger of the TRDIOji pin (i = 0 or 1, j = A, B, C, or D) external signal (input capture). Since this function is enabled with a combination of the TRDIOji pin and TRDGRji register, the input capture function, or any other mode or function, can be selected for each individual pin.

Figure 8-45 shows the Block Diagram of Input Capture Function, Table 8-14 lists the Input Capture Function Specifications, and Figure 8-46 shows an Operation Example of Input Capture Function.

Figure 8-45. Block Diagram of Input Capture Function

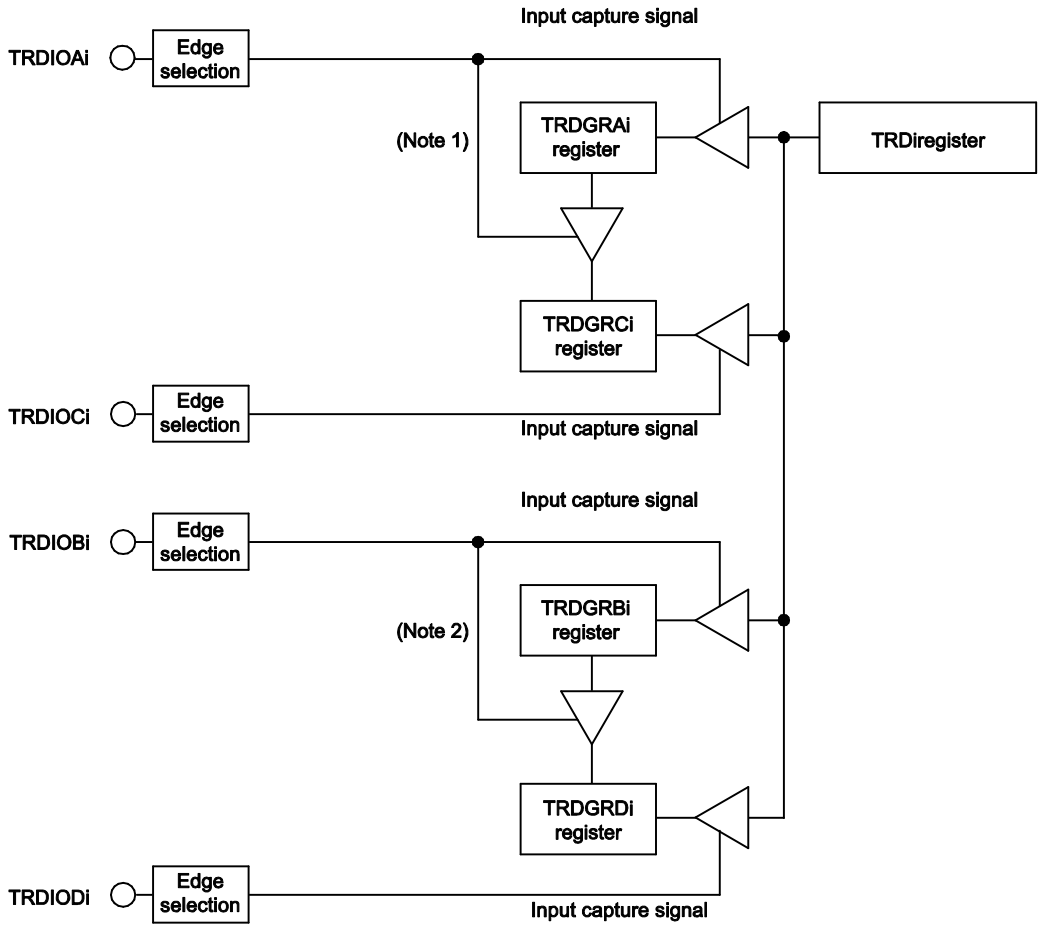

Remark
i = 0 or 1

Notes:
1. When the TRDBFCi bit in the TRDMR register is set to 1 (TRDGRCi register is buffer register for TRDGRAi register).
2. When the TRDBFDi bit in the TRDMR register is set to 1 (TRDGRDi register is buffer register for TRDGRBi register).

Table 8-14. Input Capture Function Specifications

<R>

Item	Specification
Count sources Note 1	f_{CLK}, f_{PLL}, f_{IH}, f_{SUB}, f_{IL} External signal input to the TRDCLK0 pin (active edge selected by a program)
Count operations	Increment
Count period	When bits CCLR2 to CCLR0 in the TRDCRi register are set to 000B (free-running operation). 1/fk × 65536 fk: Frequency of count source
Count start condition	1 (count starts) is written to the TSTARTi bit in the TRDSTR register.
Count stop condition	0 (count stops) is written to the TSTARTi bit in the TRDSTR register when the CSELi bit in the TRDSTR register is set to 1.
Interrupt request generation timing	• Input capture (active edge of TRDIOji input) • TRDi register overflow
TRDIOA0 pin function	I/O port, input-capture input, or TRDCLK (external clock) input
TRDIOB0, TRDIOC0, TRDIOD0, TRDIOA1 to TRDIOD1 pin function	I/O port or input-capture input (selectable for each pin)
INTP0 pin function	Not used (port or INTP0 interrupt input)
Read from timer	The count value can be read by reading the TRDi register.
Write to timer	• When the TRDSYNC bit in the TRDMR register is 0 (timer RD0 and timer RD1 operate independently). Data can be written to the TRDi register. • When the TRDSYNC bit in the TRDMR register is 1 (timer RD0 and timer RD1 operate synchronously). Data can be written to both the TRD0 and TRD1 registers by writing to the TRDi register.
Selectable functions	• Input-capture input pin selection Either one pin or multiple pins of TRDIOAi, TRDIOBi, TRDIOCi, and TRDIODi. • Input-capture input active edge selection Rising edge, falling edge, or both rising and falling edges • Timing for setting the TRDi register to 0000H. At overflow or input capture • Buffer operation (see **8. 3. 1 (2) Buffer Operation**) • Synchronous operation (see **8. 3. 1 (3) Synchronous Operation**) • Digital filter. The TRDIOji input is sampled, and when the sampled input level match three times, that level is determined. • Input capture operation by event input from event link controller (ELC). Note 2

Notes 1. When selecting the count source for the timer RD, set the same clock source as the count source for f_{CLK} before setting bit 4 (TRD0EN) in the peripheral enable register 1 (PER1).

2. The ELC is only available in the RL78/F14.

Remark i = 0 or 1, j = A, B, C, or D

(1) Operation Example

By setting bits CCLR0 to CCLR2 in the TRDCRi register (i = 0 or 1), the timer RDi counter value is reset by an input capture/compare match. Figure 8-46 shows an operation example with bits CCLR2 to CCLR0 set to 001B.

If the input capture operation has been set to clear the count during operation and is performed when the timer count value is FFFFH, depending on the timing between the count source and input capture operation interrupt flags bits IMFA to IMFD and OVF in the TRDSRi register may be set to 1 simultaneously.

Figure 8-46. Operation Example of Input Capture Function

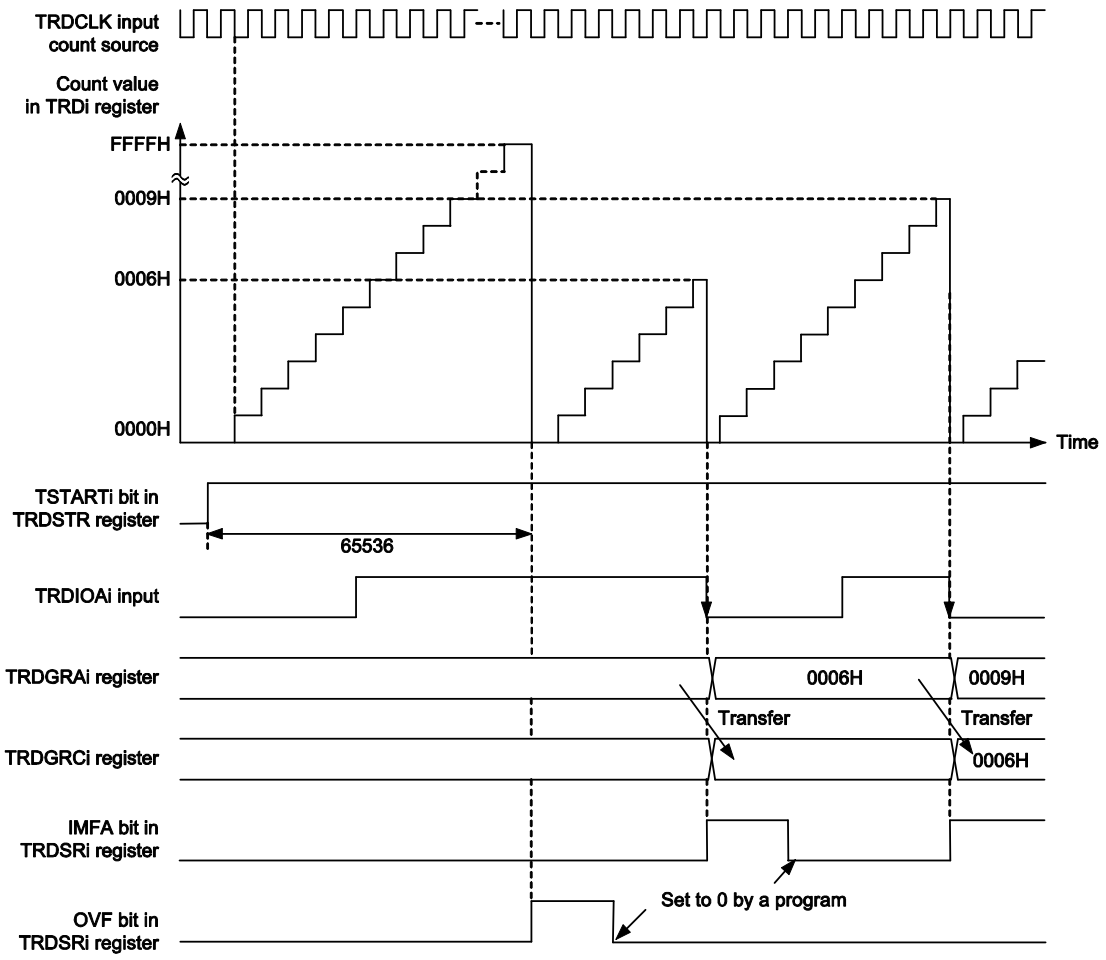

Remark
i = 0 or 1

The above diagram applies under the following conditions:
Bits CCLR2 to CCLR0 in the TRDCRi register are set to 001B (TRDi register is set to 0000H by TRDGRAi register input capture).
Bits TCK2 to TCK0 in the TRDCRi register are set to 101B (TRDCLK input for the count source).
Bits CKEG1 and CKEG0 in the TRDCRi register are set to 01B (count at the falling edge for the count source).
Bits IOA2 to IOA0 in the TRDIORAi register are set to 101B (input capture at the falling edge of TRDIOAi input).
The TRDBFCi bit in the TRDMR register is set to 1 (TRDGRCi register is buffer register for TRDGRAi register).

(2) Digital Filter

The TRDIOji input (i = 0 or 1, j = A, B, C, or D) is sampled, and when the sampled input level matches three times, its level is determined. Select the digital filter function and sampling clock using the TRDDFi register.

Figure 8-47 shows the Block Diagram of Digital Filter.

Figure 8-47. Block Diagram of Digital Filter

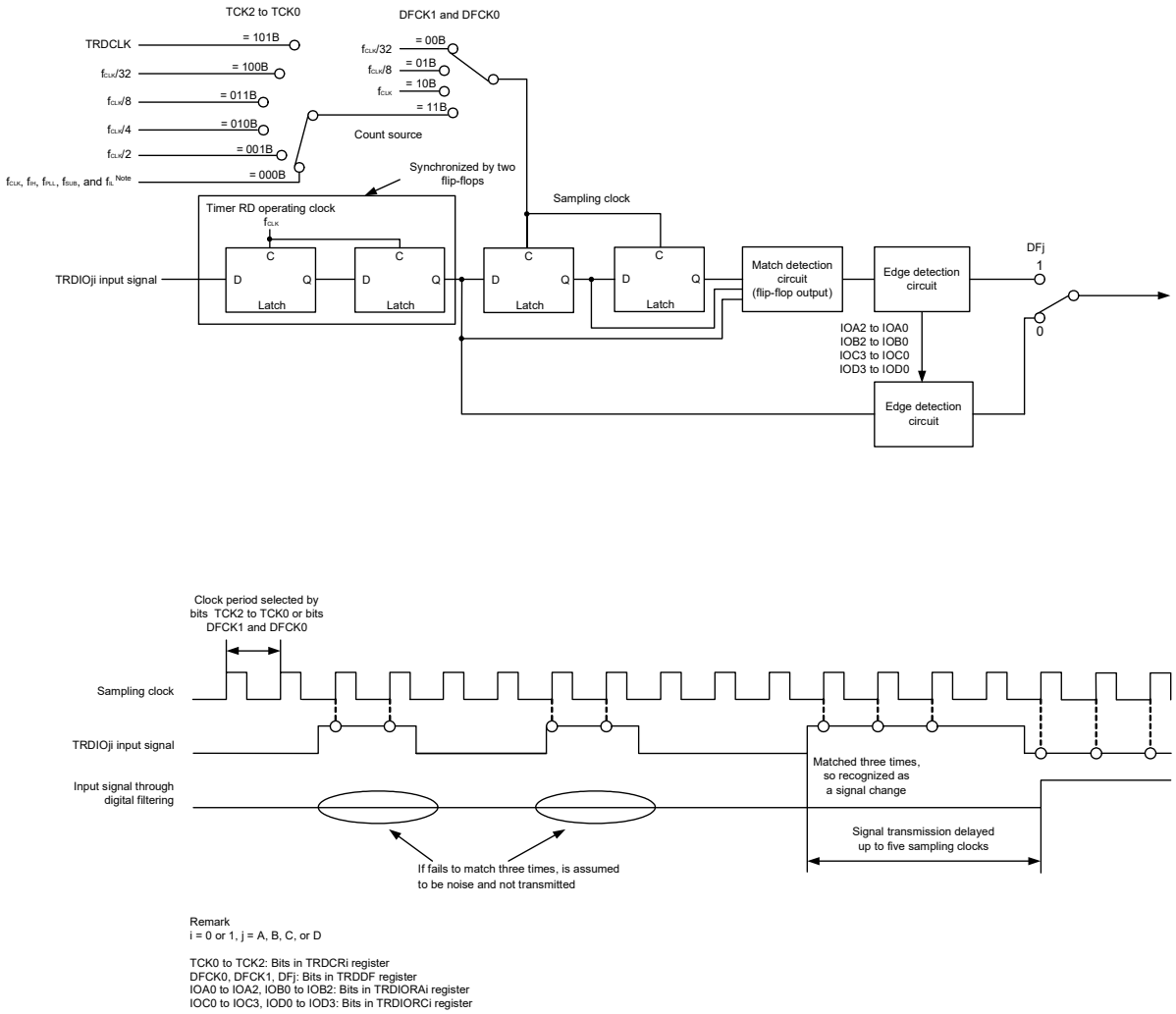

Remark
i = 0 or 1, j = A, B, C, or D

TCK0 to TCK2: Bits in TRDCRi register
DFCK0, DFCK1, DFj: Bits in TRDDF register
IOA0 to IOA2, IOB0 to IOB2: Bits in TRDIORAi register
IOC0 to IOC3, IOD0 to IOD3: Bits in TRDIORCi register

Notes 1. As the timer RD operating clock (f_{TRD}), f_{CLK} is selected when FRQSEL4 = 0 in the user option byte (000C2H/020C2H), (PLLDIV1 = 0 or SELPLLS = 0), and TRD_CKSEL = 0. f_{IH} is selected when FRQSEL4 = 1 and TRD_CKSEL = 0. f_{PLL} is selected when (PLLDIV1 = 1 and SELPLLS = 1) and TRD_CKSEL = 0. f_{SUB} is selected when SELLOSC = 0 and TRD_CKSEL = 1. f_{IL} is selected when SELLOSC = 1 and TRD_CKSEL = 1. For details, see **Figure 8-40**.

When selecting the count source for the timer RD, set the same clock source as the count source for f_{CLK} before setting bit 4 (TRD0EN) in the peripheral enable register 1 (PER1).

2. With this setting, select f_{CLK} as the timer RD operating clock (f_{TRD}).

8.3.3 Output Compare Function

This function detects matches (compare match) between the content of the TRDGRji register (j = A, B, C, or D) and the content of the TRDi register (counter) (i = 0 or 1). When the contents match, an arbitrary level is output from the TRDIOji pin. Since this function is enabled with a combination of the TRDIOji pin and TRDGRji register, the output compare function, or any other mode or function, can be selected for each individual pin.

Figure 8-48 shows the Block Diagram of Output Compare Function, Table 8-13 lists the Output Compare Function Specifications, and Figure 8-49 shows an Operation Example of Output Compare Function.

Figure 8-48. Block Diagram of Output Compare Function

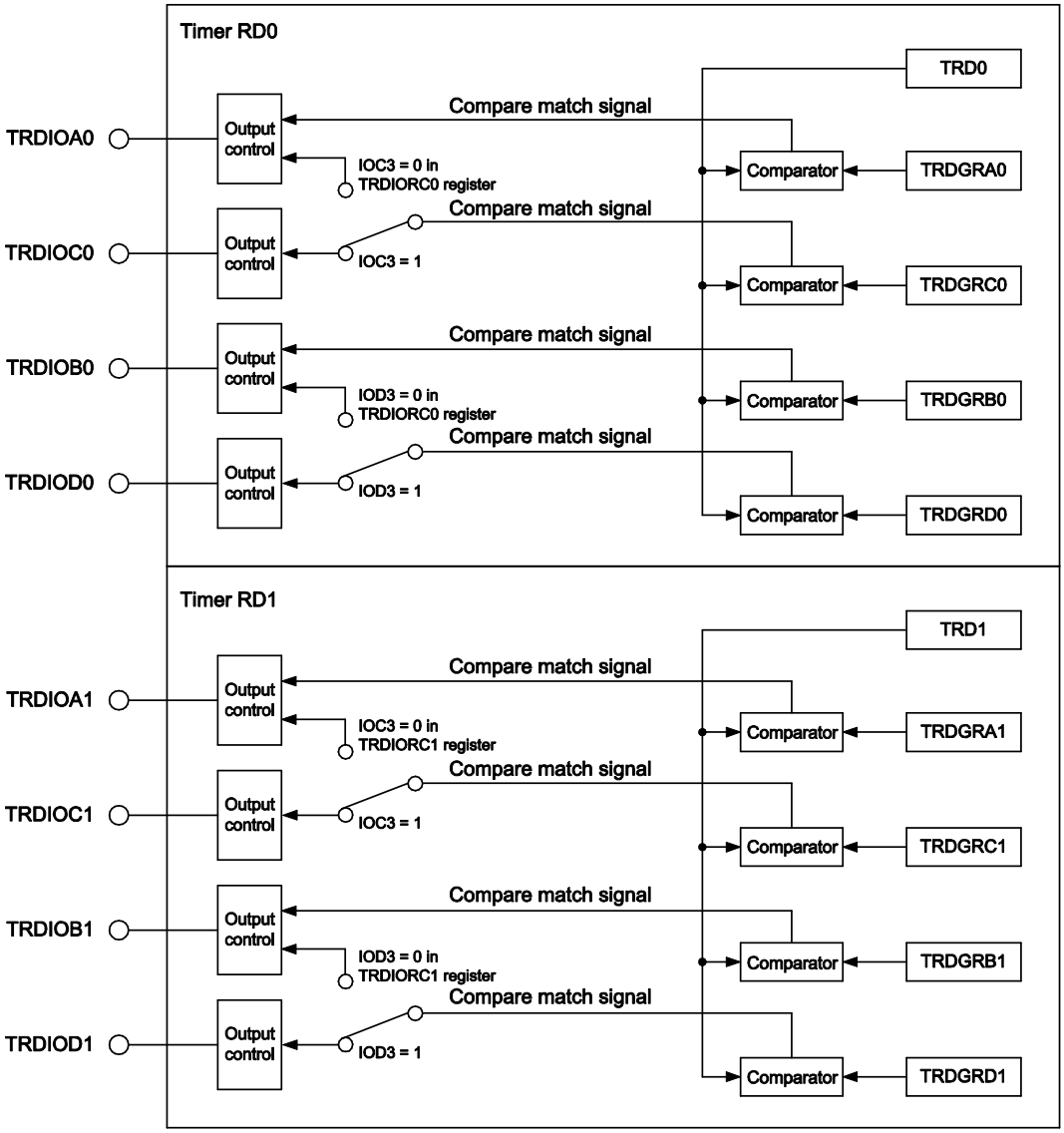

Table 8-15. Output Compare Function Specifications

Item	Specification
Count sources [Note]	f_{CLK}, f_{PLL}, f_{IH}, f_{SUB}, f_{IL} External signal input to the TRDCLK0 pin (active edge selected by a program)
Count operations	Increment
Count period	• When bits CCLR2 to CCLR0 in the TRDCRi register are set to 000B (free-running operation). 1/fk × 65536 fk: Frequency of count source • When bits CCLR1 and CCLR0 in the TRDCRi register are set to 01B or 10B (TRDi register is set to 0000H at compare match with TRDGRji register). 1/fk × (n + 1) n: Value set in the TRDGRji register
Waveform output timing	Compare match (contents of registers TRDi and TRDGRji match)
Count start condition	1 (count starts) is written to the TSTARTi bit in the TRDSTR register.
Count stop conditions	• 0 (count stops) is written to the TSTARTi bit in the TRDSTR register when the CSELi bit in the TRDSTR register is set to 1. The output compare output pin holds the output level before the count stops. • When the CSELi bit in the TRDSTR register is set to 0, the count stops at the compare match with the TRDGRAi register. The output compare output pin holds the level after output change by compare match.
Interrupt request generation timing	• Compare match (contents of registers TRDi and TRDGRji match) • TRDi register overflow
TRDIOA0 pin function	I/O port, output-compare output, or TRDCLK (external clock) input
TRDIOB0, TRDIOC0, TRDIOD0, TRDIOA1 to TRDIOD1 pin function	I/O port or output-compare output (selectable for each pin)
INTP0 pin function	Port or INTP0 interrupt input
Read from timer	The count value can be read by reading the TRDi register.
Write to timer	• When the TRDSYNC bit in the TRDMR register is set to 0 (timer RD0 and timer RD1 operate independently). Data can be written to the TRDi register. • When the TRDSYNC bit in the TRDMR register is set to 1 (timer RD0 and timer RD1 operate synchronously). Data can be written to both the TRD0 and TRD1 registers by writing to the TRDi register.
Selectable functions	• Output-compare output pin selection Either one pin or multiple pins of TRDIOAi, TRDIOBi, TRDIOCi, and TRDIODi. • Output level selection at compare match Low output, high output, or inverted output level • Initial output level selection The level can be set for the period from the count start to the compare match. • Timing for setting the TRDi register to 0000H Overflow or compare match in the TRDGRAi register • Buffer operation (see **8. 3. 1 (2) Buffer Operation**) • Synchronous operation (see **8. 3. 1 (3) Synchronous Operation**) • Changing output pins for registers TRDGRCi and TRDGRDi The TRDGRCi register can be used as output control of the TRDIOAi pin and the TRDGRDi register can be used as output control of the TRDIOBi pin. • Pulse output forced cutoff signal input (see **8. 3. 1 (4) Pulse Output Forced Cutoff**) • Timer RD can be used as the internal timer without output.

Note When selecting the count source for the timer RD, set the same clock source as the count source for f_{CLK} before setting bit 4 (TRD0EN) in the peripheral enable register 1 (PER1).

Remark i = 0 or 1, j = A, B, C, or D

(1) Operation Example

By setting bits CCLR0 to CCLR2 in the TRDCRi register (i = 0 or 1), the timer RDi counter value is reset by an input capture/compare match. If the expected compare value is FFFFH at this time, FFFFH changes to 0000H, same as the overflow operation, and the overflow flag is set to 1.

Figure 8-49. Operation Example of Output Compare Function

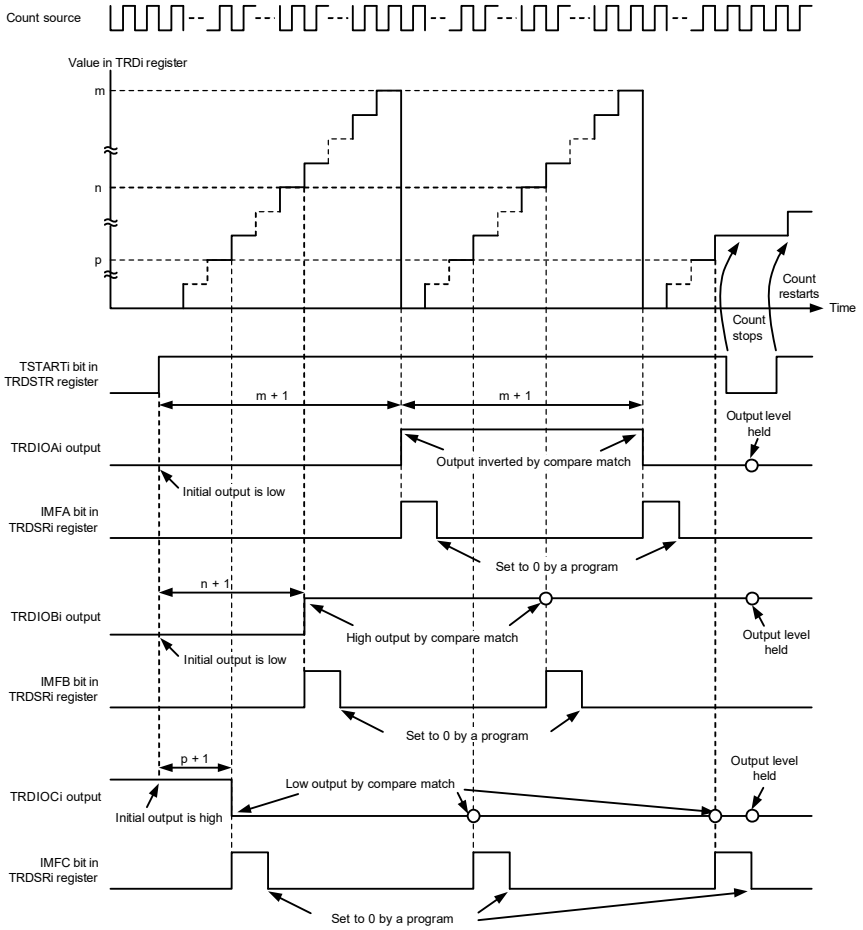

Remark
i = 0 or 1
m: Value set in TRDGRAi register
n: Value set in TRDGRBi register
p: Value set in TRDGRCi register

The above diagram applies under the following conditions :
The CSELi bit in the TRDSTR register is set to 1 (TRDi is not stopped by compare match).
Bits TRDBFCi and TRDBFDi in the TRDMR register are set to 0 (TRDGRCi and TRDGRDi do not operate as buffers).
Bits EAi, EBi, and ECi in the TRDOER1 register are set to 0 (TRDIOAi, TRDIOBi and TRDIOCi output enabled).
Bits CCLR2 to CCLR0 in the TRDCRi register are set to 001B (TRDi is set to 0000H by compare match with TRDGRAi).
Bits TOAi and TOBi in the TRDOCR register is set to 0 (initial output is low until compare match), the TOCi bit is set to 1 (initial output is high until compare match).
Bits IOA2 to IOA0 in the TRDIORAi register are set to 011B (TRDIOAi output inverted at TRDGRAi compare match).
Bits IOB2 to IOB0 in the TRDIORAi register are set to 010B (TRDIOBi high output at TRDGRBi compare match).
Bits IOC3 to IOC0 in the TRDIORCi register are set to 1001B (TRDIOCi low output at TRDGRCi register compare match).
Bits IOD3 to IOD0 in the TRDIORCi register are set to 1000B (TRDGRDi register does not control TRDIOBi pin output. Pin output by compare match is disabled).

(2) Changing Output Pins in Registers TRDGRCi (i = 0 or 1) and TRDGRDi

The TRDGRCi register can be used for output control of the TRDIOAi pin, and the TRDGRDi register can be used for output control of the TRDIOBi pin. Therefore, each pin output can be controlled as follows:

- TRDIOAi output is controlled by the values in registers TRDGRAi and TRDGRCi.
- TRDIOBi output is controlled by the values in registers TRDGRBi and TRDGRDi.

Figure 8-50. Changing Output Pins in Registers TRDGRCi and TRDGRDi

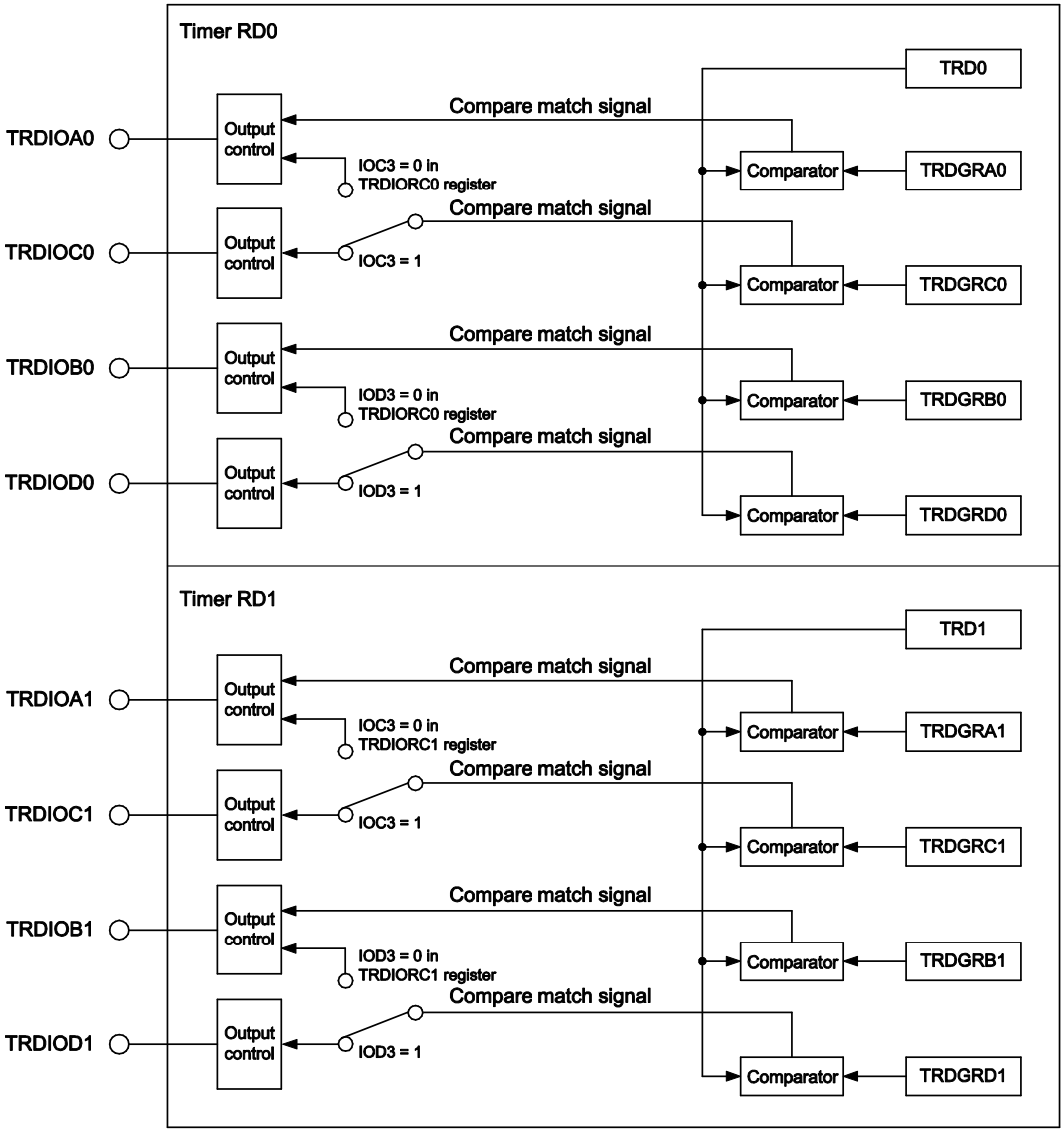

Change output pins in registers TRDGRCi and TRDGRDi as follows:

- Select 0 (TRDGRji register output pin is changed) using the IOj3 (j = C or D) bit in the TRDIORCi register.
- Set the TRDBFji bit in the TRDMR register to 0 (general register).
- Set different values in registers TRDGRCi and TRDGRAi. Also, set different values in registers TRDGRDi and TRDGRBi.

Figure 8-51 shows an Operation Example When TRDGRCi Register is Used for Output Control of TRDIOAi Pin and TRDGRDi Register is Used for Output Control of TRDIOBi Pin.

Figure 8-51. Operation Example When TRDGRCi Register is Used for Output Control of TRDIOAi Pin and TRDGRDi Register is Used for Output Control of TRDIOBi Pin

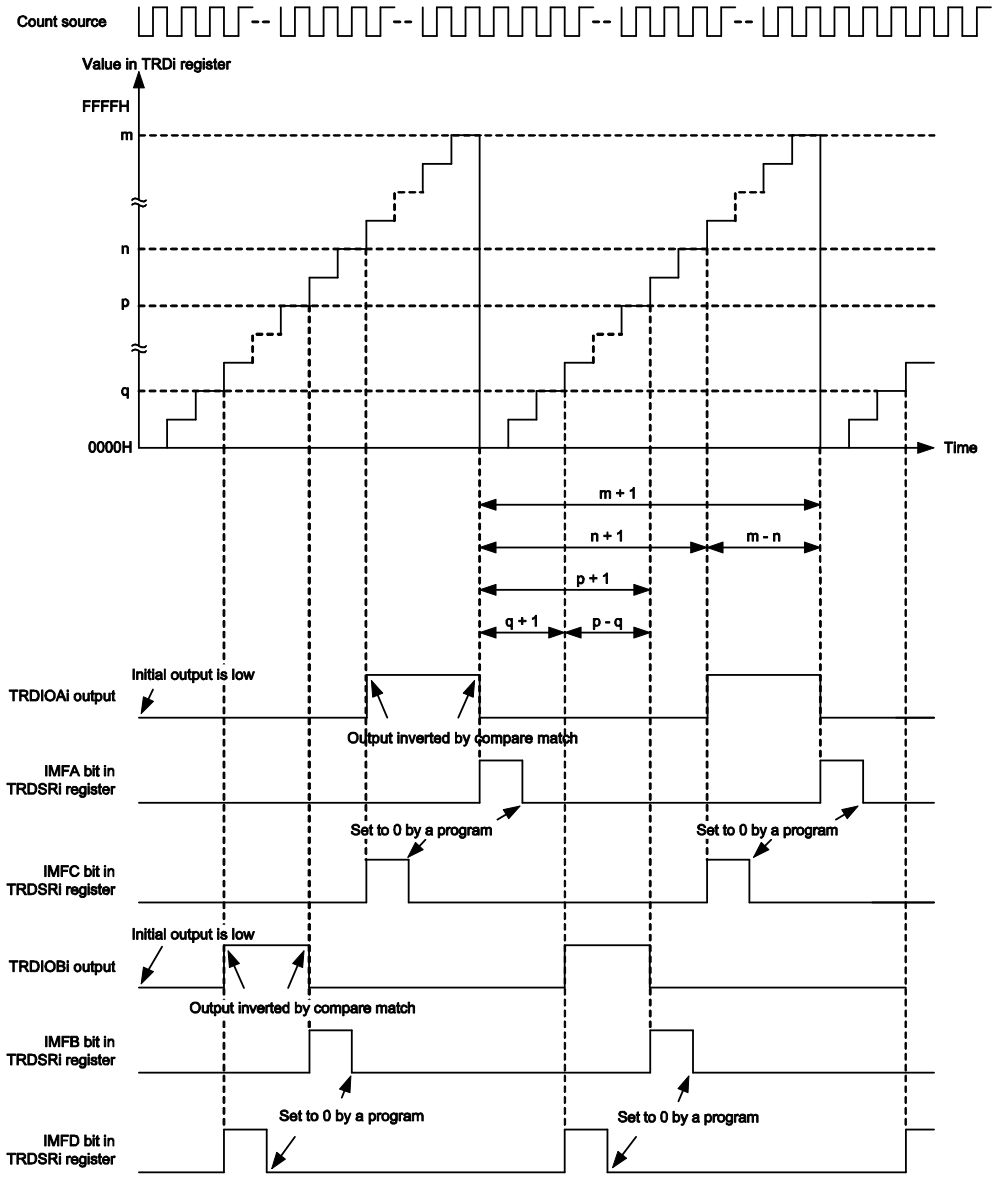

Remark
i = 0 or 1
m: Value set in TRDGRAi register
n: Value set in TRDGRCi register
p: Value set in TRDGRBi register
q: Value set in TRDGRDi register

The above diagram applies under the following conditions :
The CSELi bit in the TRDSTR register is set to 1 (TRDi register is not stopped by compare match).
Bits TRDBFCi and TRDBFDi in the TRDMR register are set to 0 (TRDGRCi and TRDGRDi do not operate as buffers).
Bits EAi and EBi in the TRDOER1 register are set to 0 (TRDIOAi and TRDIOBi output enabled).
Bits CCLR2 to CCLR0 in the TRDCRi register are set to 001B (TRDi is set to 0000H by compare match with TRDGRAi).
Bits TOAi and TOBi in the TRDOCR register are set to 0 (initial output is low until compare match).
Bits IOA2 to IOA0 in the TRDIORAi register are set to 011B (TRDIOAi output inverted at TRDGRAi compare match).
Bits IOB2 to IOB0 in the TRDIORAi register are set to 011B (TRDIOBi output inverted at TRDGRBi compare match).
Bits IOC3 to IOC0 in the TRDIORCi register are set to 0011B (TRDIOAi output inverted at TRDGRCi compare match).
Bits IOD3 to IOD0 in the TRDIORCi register are set to 0011B (TRDIOBi output inverted at TRDGRDi compare match).

8.3.4 PWM Function

In PWM function, a PWM waveform is output. Up to three PWM waveforms with the same period can be output by timer RDi (i = 0 or 1). Also, up to six PWM waveforms with the same period can be output by synchronizing timer RD0 and timer RD1.

Since this mode functions by a combination of the TRDIOji pin (i = 0 or 1, j = B, C, or D) and TRDGRji register, PWM function, or any other mode or function, can be selected for each individual pin. (However, since the TRDGRAi register is used when using any pin for PWM function, the TRDGRAi register cannot be used for other modes.)

Figure 8-52 shows the Block Diagram of PWM function, Table 8-16 lists the PWM Function Specifications, and Figure 8-53 and Figure 8-54 show Operation Examples in PWM Function.

Figure **8-52. Block Diagram of PWM Function**

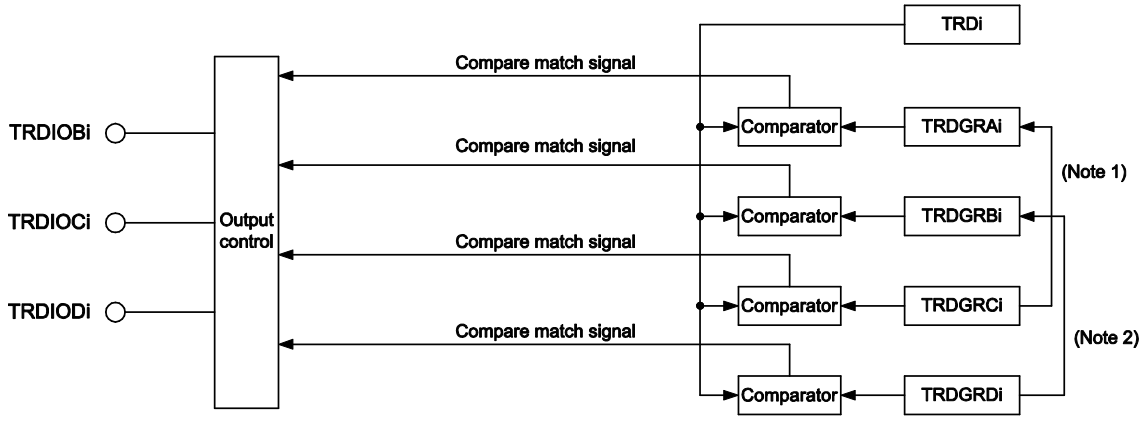

Remark
i = 0 or 1

Notes:
1. When the TRDBFCi bit in the TRDMR register is set to 1 (TRDGRCi register is buffer register for TRDGRAi register).
2. When the TRDBFDi bit in the TRDMR register is set to 1 (TRDGRDi register is buffer register for TRDGRBi register).

Table 8-16. PWM Mode Specifications

Item	Specification
Count sources [Note]	f_{CLK}, f_{PLL}, f_{IH}, f_{SUB}, f_{IL} External signal input to the TRDCLK0 pin (active edge selected by a program)
Count operations	Increment
PWM waveform	PWM period: 1/fk x (m + 1) Active level width: 1/fk x (m - n) Inactive level width: 1/fk x (n + 1) fk: Frequency of count source m: Value set in the TRDGRAi register n: Value set in the TRDGRji register 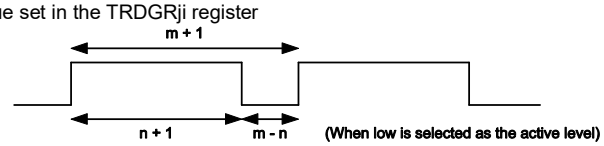
Count start condition	1 (count starts) is written to the TSTARTi bit in the TRDSTR register.
Count stop conditions	• 0 (count stops) is written to the TSTARTi bit in the TRDSTR register when the CSELi bit in the TRDSTR register is set to 1. The PWM output pin holds the output level before the count stops. • When the CSELi bit in the TRDSTR register is set to 0, the count stops at the compare match with the TRDGRAi register. The PWM output pin holds the level after output change by compare match.
Interrupt request generation timing	• Compare match (content of the TRDi register matches content of the TRDGRhi register) • TRDi register overflow
TRDIOA0 pin function	I/O port or TRDCLK (external clock) input
TRDIOA1 pin function	I/O port
TRDIOB0, TRDIOC0, TRDIOD0, TRDIOB1, TRDIOC1, TRDIOD1 pin function	I/O port or pulse output (selectable for each pin)
INTP0 pin function	Pulse output forced cutoff signal input (port or INTP0 interrupt input)
Read from timer	The count value can be read by reading the TRDi register.
Write to timer	The value can be written to the TRDi register.
Selectable functions	• One to three PWM output pins selectable with timer RDi Either one pin or multiple pins of TRDIOBi, TRDIOCi, and TRDIODi. • Active level selectable for each pin. • Initial output level selectable for each pin. • Synchronous operation (see **8. 3. 1 (3) Synchronous Operation**) • Buffer operation (see **8. 3. 1 (2) Buffer Operation**) • Pulse output forced cutoff signal input (see **8. 3. 1 (4) Pulse Output Forced Cutoff**)

Note When selecting the count source for the timer RD, set the same clock source as the count source for f_{CLK} before setting bit 4 (TRD0EN) in the peripheral enable register 1 (PER1).

Remark i = 0 or 1, j = B, C, or D, h = A, B, C, or D

(1) Operation Example

Figure 8-53. Operation Example in PWM Function

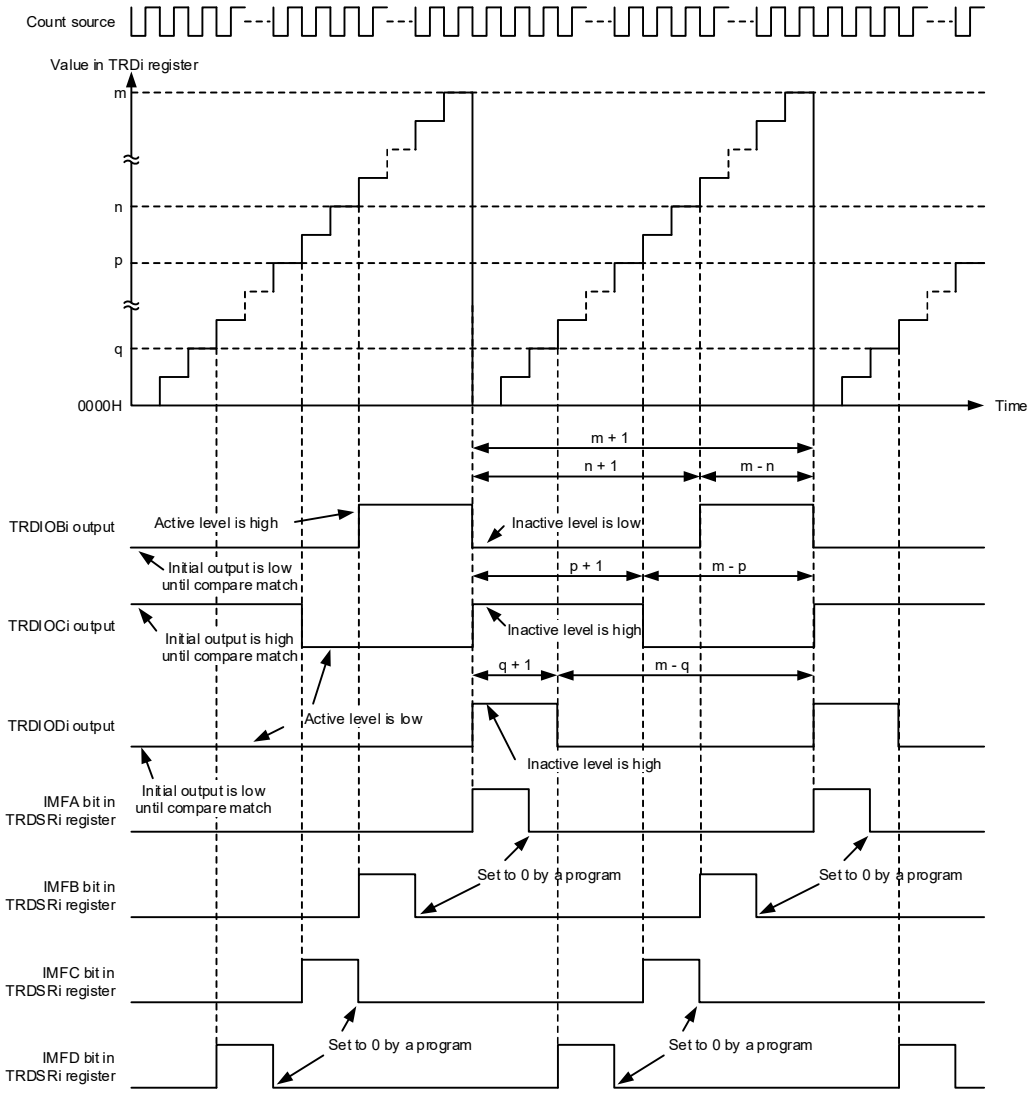

Remark
i = 0 or 1
m: Value set in TRDGRAi register
n: Value set in TRDGRBi register
p: Value set in TRDGRCi register
q: Value set in TRDGRDi register

The above diagram applies under the following conditions:
Bits TRDBFCi and TRDBFDi in the TRDMR register are set to 0 (TRDGRCi and TRDGRDi do not operate as buffers).
Bits EBi, ECi and EDi in the TRDOER1 register are set to 0 (TRDIOBi, TRDIOCi and TRDIODi output enabled).
Bits TOBi and TOCi in the TRDOCR register are set to 0 (inactive level), the TODi bit is set to 1 (active level).
The POLB bit in the TRDPOCRi register is set to 1 (active level is high), bits POLC and POLD are set to 0 (active level is low).

Figure 8-54. Operation Example in PWM Function (Duty Cycle 0%, Duty Cycle 100%)

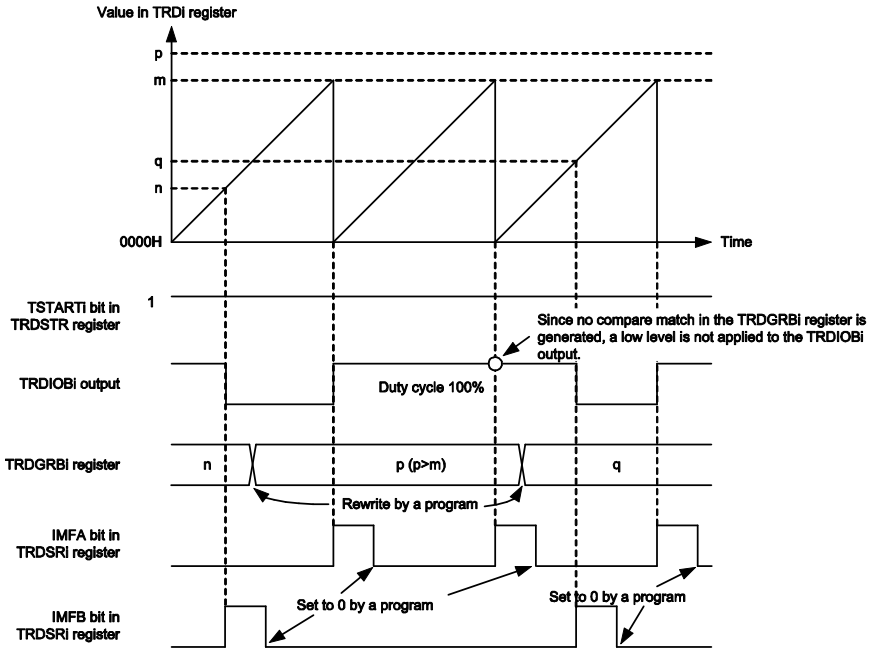

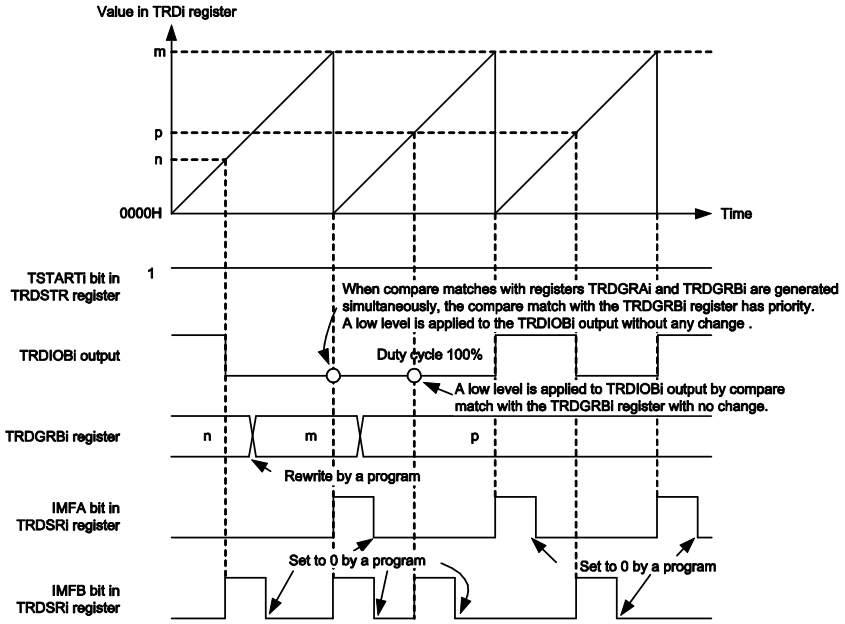

Remark
i = 0 or 1
m: Value set in TRDGRAi register

The above diagram applies under the following conditions :
The EBi bit in the TRDOER1 register is set to 0 (TRDIOBi output enabled).
The POLB bit in the TRDPOCRi register is set to 0 (active level is low).

8.3.5 Reset Synchronous PWM Mode

In this mode, three normal-phases and three counter-phases of the PWM waveform are output with the same period (three-phase, sawtooth wave modulation, and no dead time).

Figure 8-55 shows the Block Diagram of Reset Synchronous PWM Mode, Table 8-17 lists the Reset Synchronous PWM Mode Specifications, Figure 8-56 shows an Operation Example in Reset Synchronous PWM Mode.

See **Figure 8-54 Operation Example in PWM Function (Duty Cycle 0%, Duty Cycle 100%)** for an operation example in PWM Mode with duty cycle 0% and duty cycle 100%.

Figure 8-55. Block Diagram of Reset Synchronous PWM Mode

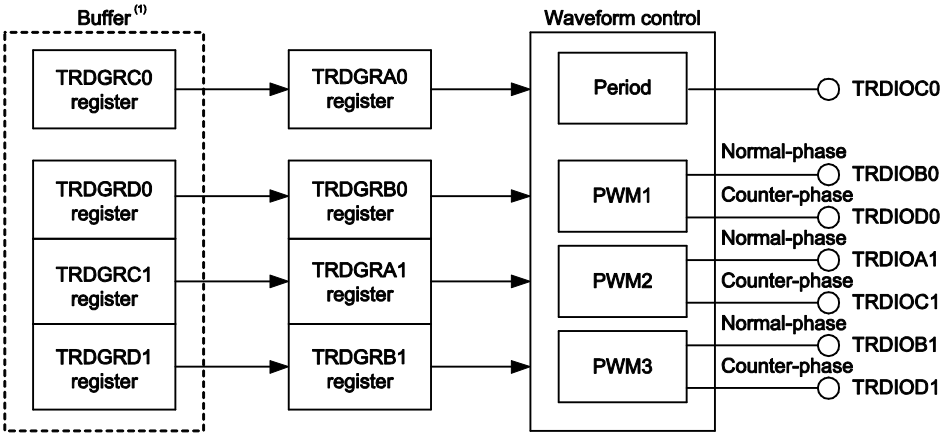

Note:
1. When bits TRDBFC0, TRDBFD0, TRDBFC1, and TRDBFD1 in the TRDMR register are set to 1 (buffer register).

Table 8-17. Reset Synchronous PWM Mode Specifications

Item	Specification
Count sources [Note]	f_{CLK}, f_{PLL}, f_{IH}, f_{SUB}, f_{IL} External signal input to the TRDCLK0 pin (active edge selected by a program)
Count operations	The TRD0 register is incremented (the TRD1 register is not used).
PWM waveform	PWM period: 1/fk x (m + 1) Active level of normal-phase: 1/fk x (m - n) Inactive level of counter-phase: 1/fk x (n + 1) fk: Frequency of count source m: Value set in the TRDGRA0 register n: Value set in the TRDGRB0 register (PWM1 output) Value set in the TRDGRA1 register (PWM2 output) Value set in the TRDGRB1 register (PWM3 output) 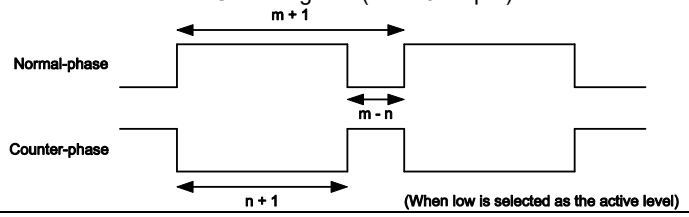
Count start condition	1 (count starts) is written to the TSTART0 bit in the TRDSTR register.
Count stop conditions	• 0 (count stops) is written to the TSTART0 bit when the CSEL0 bit in the TRDSTR register is set to 1. The PWM output pin outputs the initial output level selected by bits OLS0 and OLS1 in the TRDFCR register. • When the CSEL0 bit in the TRDSTR register is set to 0, the count stops at the compare match with the TRDGRA0 register. The PWM output pin outputs the initial output level selected by bits OLS0 and OLS1 in the TRDFCR register.
Interrupt request generation timing	• Compare match (content of the TRD0 register matches content of registers TRDGRj0, TRDGRA1, and TRDGRB1) • TRD0 register overflow
TRDIOA0 pin function	I/O port or TRDCLK (external clock) input
TRDIOB0 pin function	PWM1 output normal-phase output
TRDIOD0 pin function	PWM1 output counter-phase output
TRDIOA1 pin function	PWM2 output normal-phase output
TRDIOC1 pin function	PWM2 output counter-phase output
TRDIOB1 pin function	PWM3 output normal-phase output
TRDIOD1 pin function	PWM3 output counter-phase output
TRDIOC0 pin function	Output inverted every PWM period
INTP0 pin function	Pulse output forced cutoff signal input (port or INTP0 interrupt input)
Read from timer	The count value can be read by reading the TRD0 register.
Write to timer	The value can be written to the TRD0 register.
Selectable functions	•The normal-phase and counter-phase active level and initial output level are selected individually. • Buffer operation (see **8. 3. 1 (2) Buffer Operation**) • Pulse output forced cutoff signal input (see **8. 3. 1 (4) Pulse Output Forced Cutoff**)

Note When selecting the count source for the timer RD, set the same clock source as the count source for f_{CLK} before setting bit 4 (TRD0EN) in the peripheral enable register 1 (PER1).

Remark j = A, B, C, or D

(1) Operation Example

Figure 8-56. Operation Example in Reset Synchronous PWM Mode

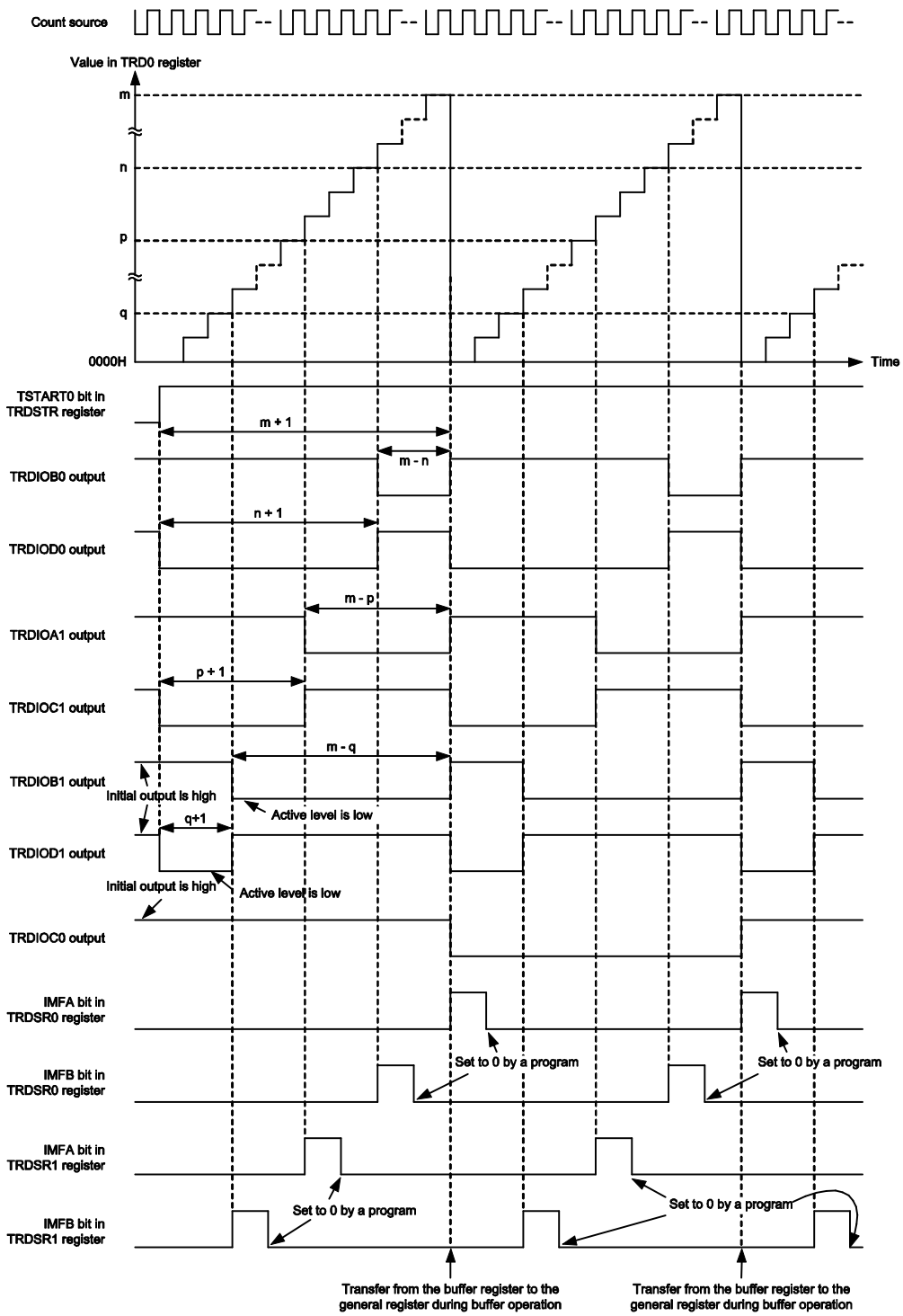

Remark
i = 0 or 1
m: Value set in TRDGRA0 register
n: Value set in TRDGRB0 register
p: Value set in TRDGRA1 register
q: Value set in TRDGRB1 register
The above diagram applies under the following condition :
Bits OLS1 and OLS0 in the TRDFCR register are set to 0 (initial output level is high, active level is low).

8.3.6 Complementary PWM Mode

In this mode, three normal-phases and three counter-phases of the PWM waveform are output with the same period (three-phase, triangular wave modulation, and with dead time).

Figure 8-57 shows the Block Diagram of Complementary PWM Mode, Table 8-18 lists the Complementary PWM Mode Specifications, and Figure 8-58 shows the Output Model of Complementary PWM Mode, and Figure 8-59 shows an Operation Example in Complementary PWM Mode.

Figure 8-57. Block Diagram of Complementary PWM Mode

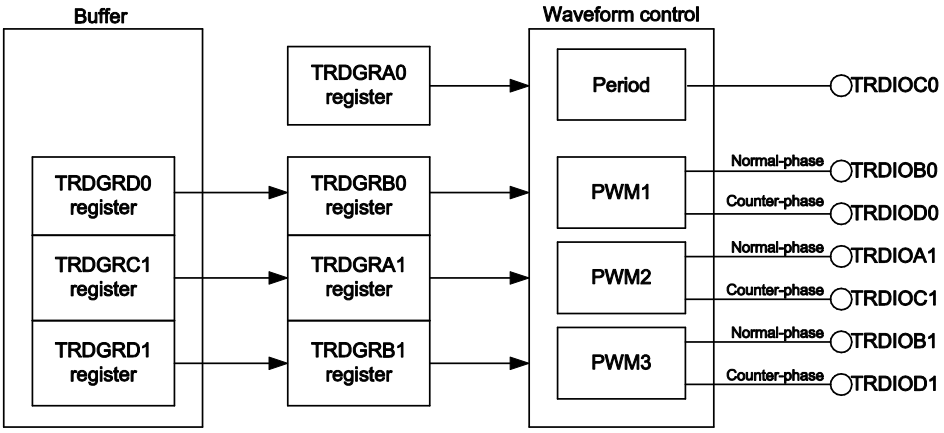

Table 8-18. Complementary PWM Mode Specifications

Item	Specification
Count sources [Note 1]	f_{CLK}, f_{PLL}, f_{IH}, f_{SUB}, f_{IL} External signal input to the TRDCLK0 pin (active edge selected by a program) Set bits TCK2 to TCK0 in the TRDCR1 register to the same value (same count source) as bits TCK2 to TCK0 in the TRDCR0 register.
Count operations	Increment or decrement. Registers TRD0 and TRD1 are decremented with the compare match with registers TRD0 and TRDGRA0 during increment operation. When the TRD1 register changes from 0000H to FFFFH during decrement operation, and registers TRD0 and TRD1 are incremented.
PWM waveform	PWM period: 1/fk × (m + 2 - p) × 2 [Note 2] Dead time: p Active level width of normal-phase: 1/fk × (m - n - p + 1) × 2 Active level width of counter-phase: 1/fk × (n + 1 - p) × 2 fk: Frequency of count source m: Value set in the TRDGRA0 register n: Value set in the TRDGRB0 register (PWM1 output) Value set in the TRDGRA1 register (PWM2 output) Value set in the TRDGRB1 register (PWM3 output) p: Value set in the TRD0 register 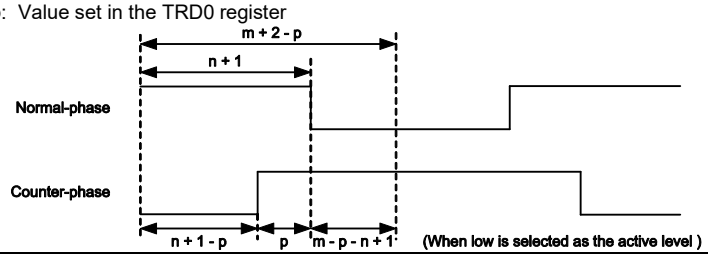
Count start condition	1 (count starts) is written to bits TSTART0 and TSTART1 in the TRDSTR register.
Count stop condition	0 (count stops) is written to bits TSTART0 and TSTART1 in the TRDSTR register when the CSEL0 bit in the TRDSTR register is set to 1. (The PWM output pin outputs the initial output level selected by bits OLS0 and OLS1 in the TRDFCR register.)
Interrupt request generation timing	• Compare match (content of the TRDi register matches content of the TRDGRji register) • TRD1 register underflow
TRDIOA0 pin function	I/O port or TRDCLK (external clock) input
TRDIOB0 pin function	PWM1 output normal-phase output
TRDIOD0 pin function	PWM1 output counter-phase output
TRDIOA1 pin function	PWM2 output normal-phase output
TRDIOC1 pin function	PWM2 output counter-phase output
TRDIOB1 pin function	PWM3 output normal-phase output
TRDIOD1 pin function	PWM3 output counter-phase output
TRDIOC0 pin function	Output inverted every 1/2 period of PWM
INTP0 pin function	Pulse output forced cutoff signal input (port or INTP0 interrupt input)
Read from timer	The count value can be read by reading the TRDi register.
Write to timer	The value can be written to the TRDi register.
Selectable functions	• Pulse output forced cutoff signal input (see **8. 3. 1 (4) Pulse Output Forced Cutoff)** • The normal-phase and counter-phase active level and initial output level are selected individually. • Transfer timing from the buffer register selection

Notes 1. When selecting the count source for the timer RD, set the same clock source as the count source for f_{CLK} before setting bit 4 (TRD0EN) in the peripheral enable register 1 (PER1).

2. After a count starts, the PWM period is fixed.

Remark i = 0 or 1, j = A, B, C, or D

(1) Operation Example

Figure 8-58. Output Model of Complementary PWM Mode

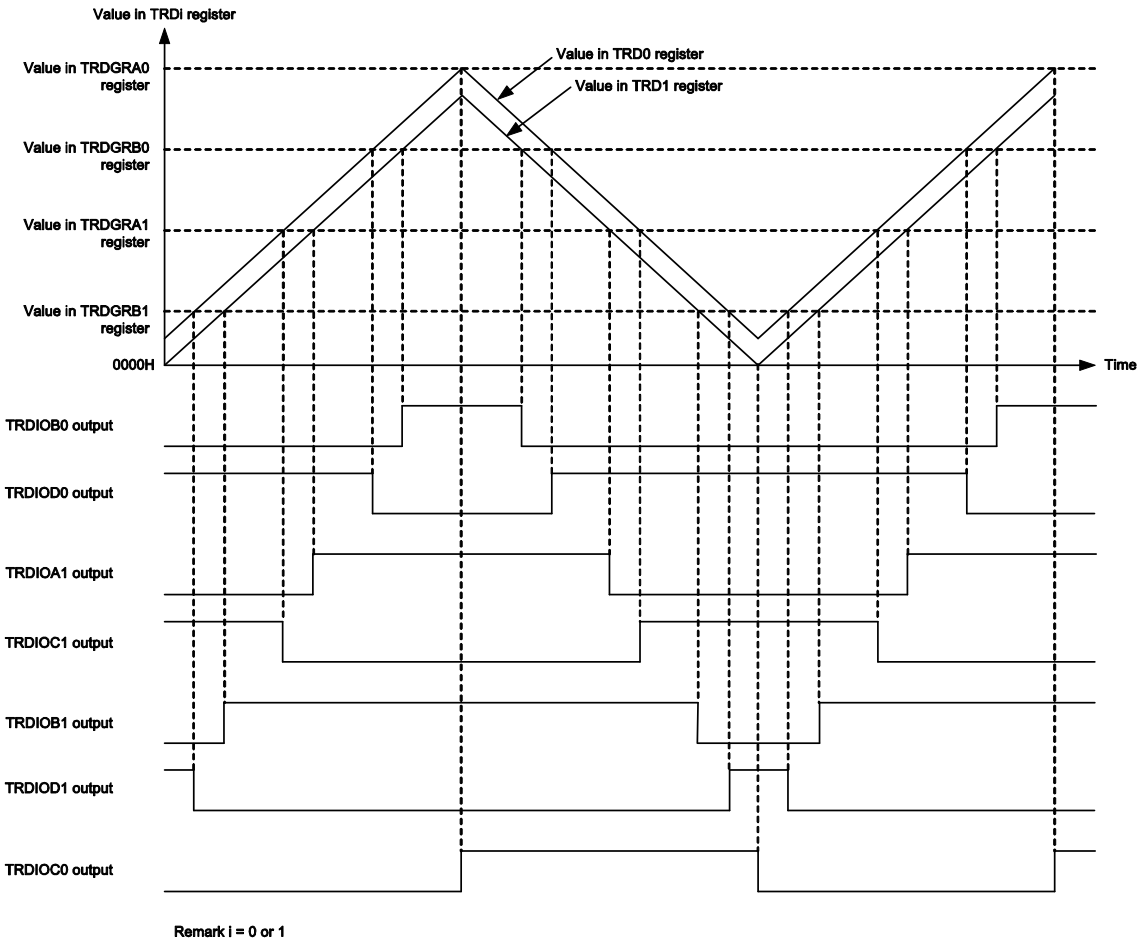

Figure 8-59. Operation Example in Complementary PWM Mode

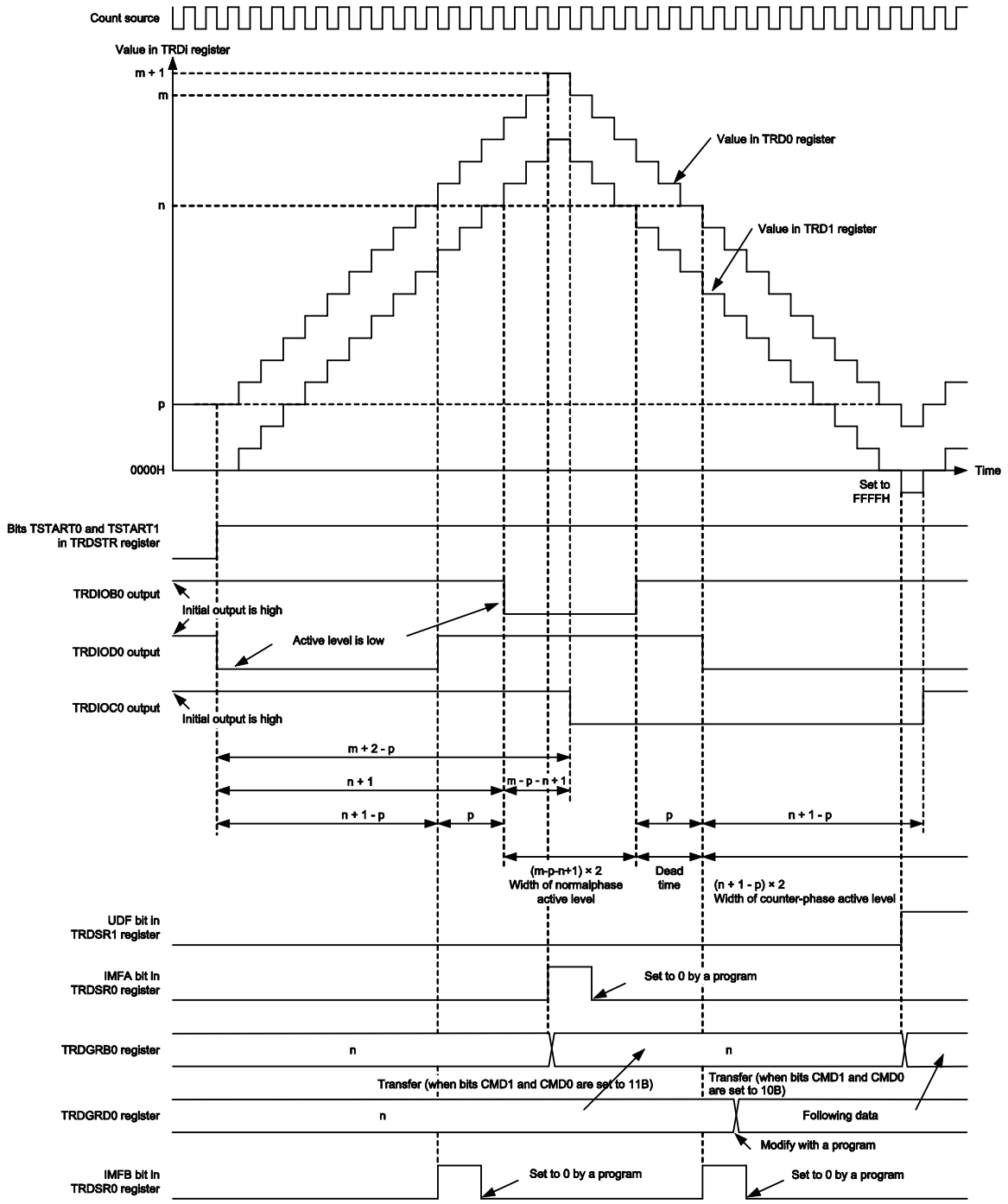

Remark
CMD0, CMD1: Bits in TRDFCR register
i = 0 or 1
m: Value set in TRDGRA0 register
n: Value set in TRDGRB0 register
p: Value set in TRD0 register

The above diagram applies under the following condition :
Bits OLS1 and OLS0 in TRDFCR are set to 0 (initial output level is high, active level is low for normal-phase and counter-phase).

(2) Transfer Timing from Buffer Register

- Transfer from the TRDGRD0, TRDGRC1, or TRDGRD1 register to the TRDGRB0, TRDGRA1, or TRDGRB1 register.
  When bits CMD1 and CMD0 in the TRDFCR register are set to 10B, the content is transferred when the TRD1 register underflows.
  When bits CMD1 and CMD0 are set to 11B, the content is transferred at compare match between registers TRD0 and TRDGRA0.

8.3.7 PWM3 Mode

In this mode, two PWM waveforms are output with the same period.

Figure 8-60 shows the Block Diagram of PWM3 Mode, Table 8-19 lists the PWM3 Mode Specifications, and Figure 8-61 shows an Operation Example in PWM3 Mode.

Figure 8-60. Block Diagram of PWM3 Mode

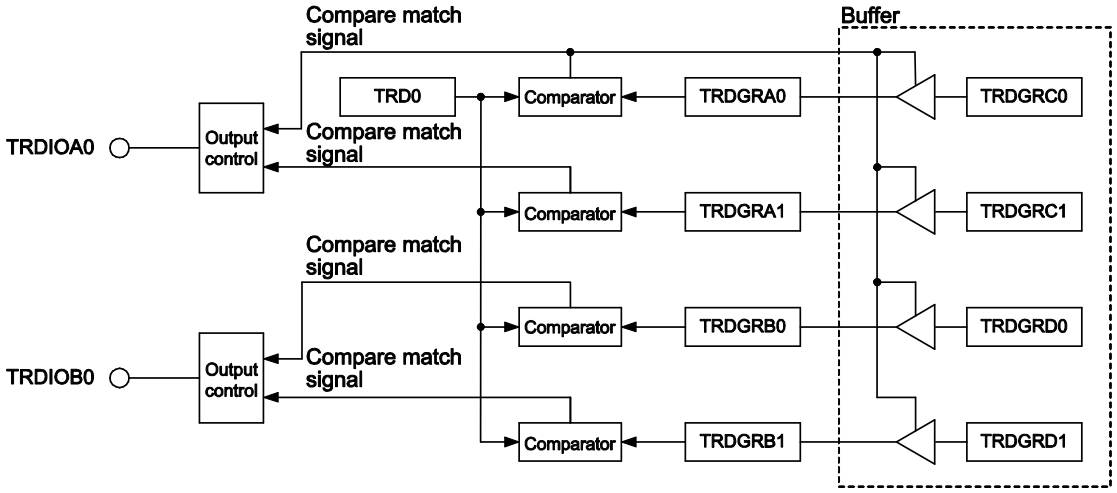

Table 8-19. PWM3 Mode Specifications

Item	Specification
Count sources [Note]	f_{CLK}, f_{PLL}, f_{IH}, f_{SUB}, f_{IL}
Count operations	The TRD0 register is incremented (the TRD1 register is not used).
PWM waveform	PWM period: 1/fk × (m + 1) Active level width of TRDIOA0 output: 1/fk × (m - n) Active level width of TRDIOB0 output: 1/fk × (p - q) fk: Frequency of count source m: Value set in the TRDGRA0 register n: Value set in the TRDGRA1 register p: Value set in the TRDGRB0 register q: Value set in the TRDGRB1 register 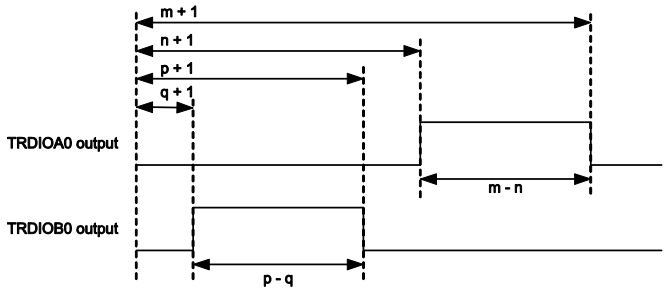 (When high is selected as the active level)
Count start condition	1 (count starts) is written to the TSTART0 bit in the TRDSTR register.
Count stop conditions	• 0 (count stops) is written to the TSTART0 bit in the TRDSTR register when the CSEL0 bit in the TRDSTR register is set to 1. The PWM output pin holds the output level before the count stops. • When the CSEL0 bit in the TRDSTR register is set to 0, the count stops at compare match with the TRDGRA0 register. The PWM output pin holds the level after output change by compare match.
Interrupt request generation timing	• Compare match (content of the TRDi register matches content of the TRDGRji register) • TRD0 register overflow
TRDIOA0, TRDIOB0 pin function	PWM output
TRDIOA0, TRDIOD0, and TRDIOA1 to TRDIOD1 pin function	I/O port
INTP0 pin function	Pulse output forced cutoff signal input (port or INTP0 interrupt input)
Read from timer	The count value can be read by reading the TRD0 register.
Write to timer	The value can be written to the TRD0 register.
Selectable functions	• Pulse output forced cutoff signal input (see **8. 3. 1 (4) Pulse Output Forced Cutoff**) • Active level selectable for each pin. • Buffer operation (see **8. 3. 1 (2) Buffer Operation**)

Note When selecting the count source for the timer RD, set the same clock source as the count source for f_{CLK} before setting bit 4 (TRD0EN) in the peripheral enable register 1 (PER1).

Remark i = 0 or 1, j = A, B, C, or D

(1) Operation Example

Figure 8-61. Operation Example in PWM3 Mode

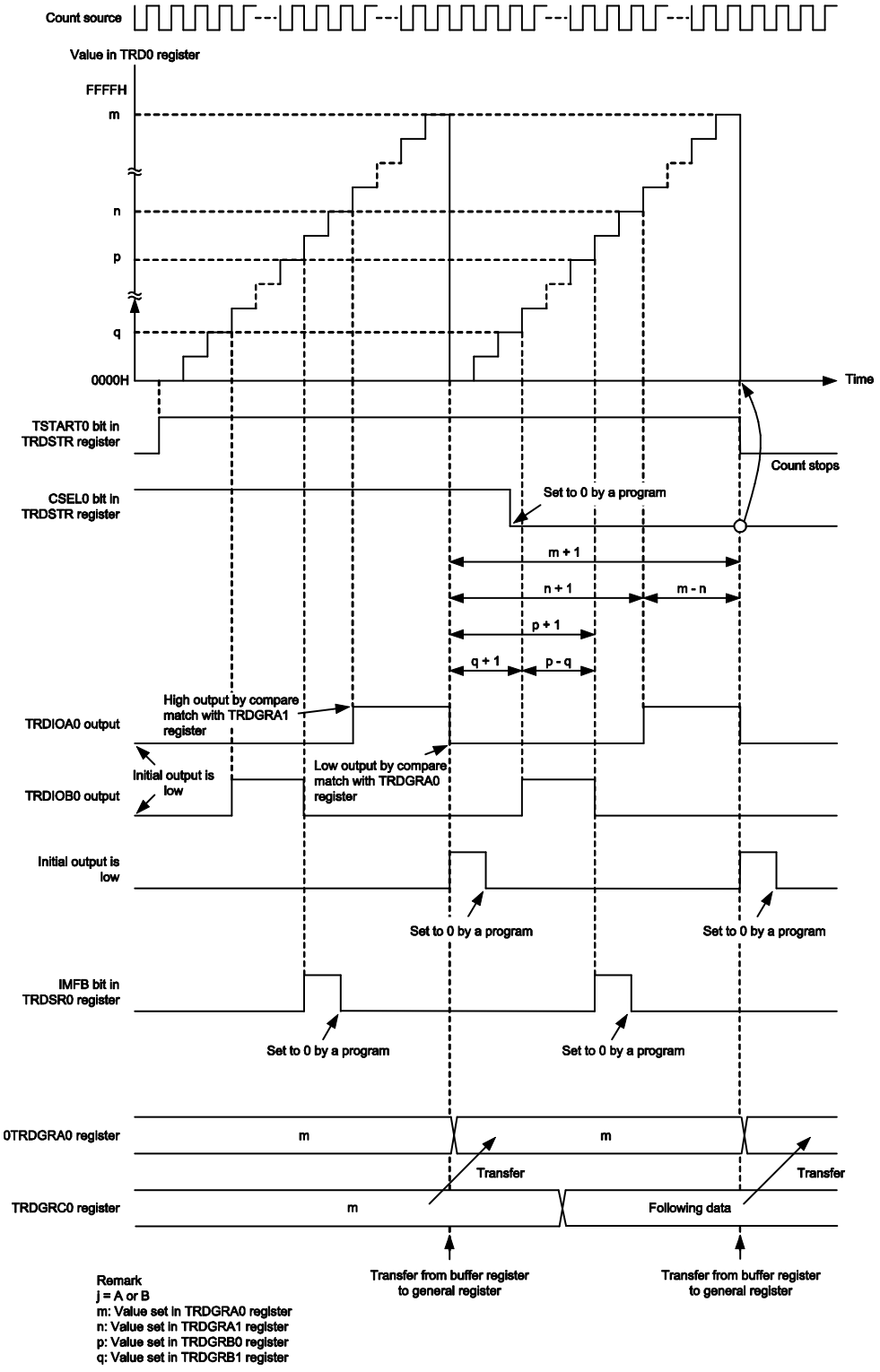

Remark
j = A or B
m: Value set in TRDGRA0 register
n: Value set in TRDGRA1 register
p: Value set in TRDGRB0 register
q: Value set in TRDGRB1 register

The above diagram applies under the following conditions :
The above diagram applies under the following conditions :
- Both the TOA0 and TOB0 bits in the TRDOCR register are set to 0 (initial output is low, high output by compare match with TRDGRj1 register, low output by compare match with TRDGRj0 register).
- The TRDBFC0 bit in the TRDMR register is set to 1 (TRDGRC0 register is buffer register for TRDGRA0 register).

8.4 Timer RD Interrupt

Timer RD generates the timer RDi (i = 0 or 1) interrupt request from six sources for each timer RD0 and timer RD1.

Table 8-20 lists the Registers Associated with Timer RD Interrupt and Figure 8-62 shows the Timer RD Interrupt Block Diagram.

Table 8-20. Registers Associated with Timer RD Interrupt

	Timer RD Status Register	Timer RD Interrupt Enable Register	Interrupt Request Flag (Register)	Interrupt Mask Flag (Register)	Priority Specification Flag (Register)
Timer RD0	TRDSR0	TRDIER0	TRDIF0 (IF0H)	TRDMK0 (MK0H)	TRDPR00 (PR00H) TRDPR10 (PR10H)
Timer RD1	TRDSR1	TRDIER1	TRDIF1 (IF0H)	TRDMK1 (MK0H)	TRDPR01 (PR00H) TRDPR11 (PR10H)

Figure 8-62. Timer RD Interrupt Block Diagram

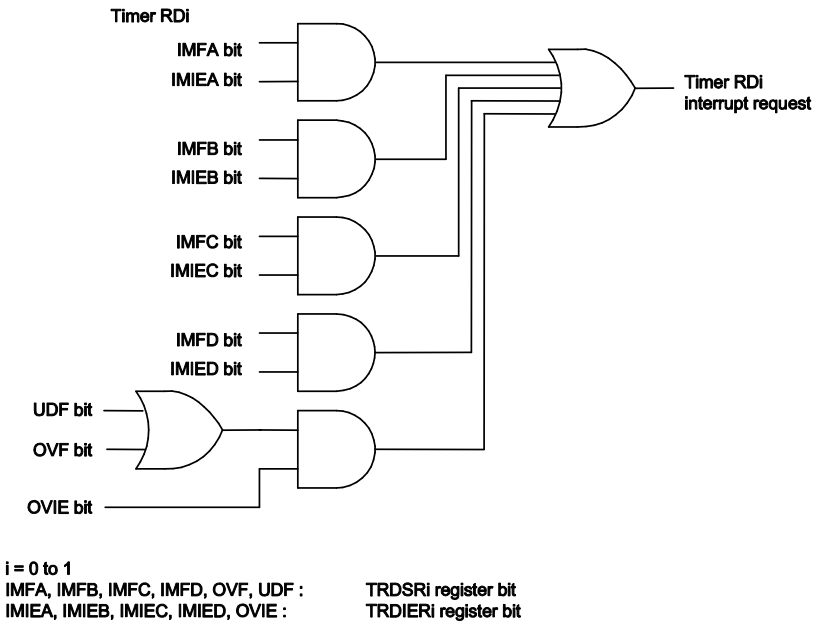

Since the interrupt source (timer RD interrupt) is generated by a combination of multiple interrupt request sources for timer RD, the following differences from other maskable interrupts apply:

- When a bit in the TRDSRi register is 1 and the corresponding bit in the TRDIERi register is 1 (interrupt enabled), the TRDIFi bit in the IF0H register is set to 1 (interrupt requested).
- If multiple bits in the TRDIERi register are set to 1, use the TRDSRi register to determine the source of the interrupt request.
- Since the bits in the TRDSRi register are not automatically set to 0 even if the interrupt is acknowledged, set the corresponding bit to 0 in the interrupt routine.
  Use either (a) or (b) described below to clear each bit of the TRDSRi register.
  (a) Set the TRDIERi register to 00H (disabling all interrupts) and then write 0 to all of the status flags.
  (b) When at least one bit in the TRDIERi register has the setting 1 and the status flag of an interrupt source enabled by the corresponding bit is 1, write 0 to all of the status flag bits whose settings are 1 in the TRDSRi register.

- While multiple bits in the TRDIERi register are set to 1, if the first request source is met and the TRDIFi bit is set to 1, and then the next request source is met, the TRDIFi bit is cleared to 0 when the interrupt is acknowledged. However, if the previously met request source is cleared, the TRDIFi bit is set to 1 by the next generated request source.

8.5 Notes on Timer RD

8.5.1 SFR Read/Write Access

The timer RD SFRs are undefined when FRQSEL4 = 1 in the user option byte (000C2H/020C2H) and TRD0EN = 0 in the PER1 register. If it is necessary to read the initial value, set f_{CLK} to f_{IH} and TRD0EN = 1 before reading.

When setting timer RD, set the TRD0EN bit in the PER1 register to 1 first. If the TRD0EN bit is 0, writes to the timer RD control registers are ignored and all the read values are the initial values (except for the port registers and the port mode registers).

The following registers must not be rewritten during count operation:

TRDELC, TRDMR, TRDPMR, TRDFCR, TRDOER1, TRDPTO bit in TRDOER2, TRDDFi, TRDCRi, TRDIORAi, TRDIORCi, TRDPOCRi

(1) TRDSTR Register

- Set the TRDSTR register by an 8-bit memory manipulation instruction.
- When the CSELi bit (i = 0 or 1) in the TRDSTR register is set to 0 (count stops at compare match between registers TRDi and TRDGRAi), the count does not stop and the TSTARTi bit remains unchanged even if 0 (count stops) is written to the TSTARTi bit.
  The TSTARTi bit is set to 0 (count stops) only by a compare match with the TRDGRAi register.
  If the CSELi bit is 0 when rewriting the TRDSTR register, write 0 to the TSTARTi bit to change the CSELi bit to 1 without affecting count operation.
  If 1 is written to the TSTARTi bit while the counter is stopped, count may be started.
  To stop counting by a program, set the TSTARTi bit after setting the CSELi bit to 1. Even if 1 is written to the CSELi bit and 0 is written to the TSTARTi bit at the same time (using one instruction), the count cannot be stopped.
- Table 8-21 lists the TRDIOji (j = A, B, C, or D) Pin Output Level When Count Stops while using the TRDIOji (j = A, B, C, or D) pin for timer RD output.

Table 8-21. TRDIOji (j = A, B, C, or D) Pin Output Level When Count Stops

Count Stop	TRDIOji Pin Output When Count Stops
When the CSELi bit is set to 1, write 0 to the TSTARTi bit and the count stops.	The pin holds the output level immediately before the count stops. (The pin outputs the initial output level selected by bits OLS0 and OLS1 in the TRDFCR register in timer RD complementary and reset synchronous PWM modes.)
When the CSELi bit is set to 0, the count stops at compare match with registers TRDi and TRDGRAi.	The pin holds the output level after the output changes by compare match. (The pin outputs the initial output level selected by bits OLS0 and OLS1 in the TRDFCR register in timer RD complementary and reset synchronous PWM modes.)

Remark i = 0 or 1, j = A, B, C, or D

(2) TRDDFi Register (i = 0 or 1)

Set bits DFCK0 and DFCK1 in the TRDDFi register before starting count operation.

8.5.2 Mode Switching

- Set the count to stopped (set bits TSTART0 and TSTART1 to 0) before switching modes during operation.
- Set bits TRDIF0 and TRDIF1 to 0 before changing bits TSTART0 and TSTART1 from 0 to 1. Refer to **CHAPTER 21 INTERRUPT FUNCTIONS** for details.

8.5.3 Count Source

- Switch the count source after the count stops.

[Changing procedure]

(1) Set the TSTARTi bit (i = 0 or 1) in the TRDSTR register to 0 (count stops).

(2) Change bits TCK0 to TCK2 in the TRDCRi register.

- When selecting the count source for the timer RD, set the same clock source as the count source for f_{CLK} before setting bit 4 (TRD0EN) in the peripheral enable register 1 (PER1).

8.5.4 Input Capture Function

- Set the pulse width of the input capture signal to three or more cycles of the timer RD operating clock (f_{TRD}).
- The value of the TRDi register is transferred to the TRDGRji register two to three cycles of the timer RD operating clock (f_{TRD}) after the input capture signal is applied to the TRDIOji pin (i = 0 or 1, j = A, B, C, or D) (when no digital filter is used).

<R> - In input capture mode, an input capture interrupt request for the active edge of the TRDIOji input is also generated when the TSTARTi bit in the TRDSTR register is 0 (count stops) if the edge selected by bits TRDIOj0 and TRDIOj1 in the TRDIORji register is input to the TRDIOji pin (i = 0 or 1; j = A, B, C, or D). Set the pulse width of the input capture signal to three or more cycles of the timer RD operating clock (f_{TRD}).

8.5.5 Procedure for Setting Pins TRDIOAi, TRDIOBi, TRDIOCi, and TRDIODi (i = 0 or 1)

After a reset, the I/O ports multiplexed with pins TRDIOAi, TRDIOBi, TRDIOCi, and TRDIODi function as input ports.

To output from pins TRDIOAi, TRDIOBi, TRDIOCi, and TRDIODi, use the following setting procedure:

Changing procedure

(1) Set the mode and the initial value.

(2) Enable output from pins TRDIOAi, TRDIOBi, TRDIOCi, and TRDIODi (TRDOER1 register).

(3) Set the port register bits corresponding to pins TRDIOAi, TRDIOBi, TRDIOCi, and TRDIODi to 0.

(4) Set the port mode register bits corresponding to pins TRDIOAi, TRDIOBi, TRDIOCi, and TRDIODi to output mode. (Output is started from pins TRDIOAi, TRDIOBi, TRDIOCi, and TRDIODi)

(5) Start the count (set bits TSTART0 and TSTART1 to 1).

To change the port mode register bits corresponding to pins TRDIOAi, TRDIOBi, TRDIOCi, and TRDIODi from output mode to input mode, use the following setting procedure:

(1) Set the port mode register bits corresponding to pins TRDIOAi, TRDIOBi, TRDIOCi, and TRDIODi to input mode (input is started from pins TRDIOAi, TRDIOBi, TRDIOCi, and TRDIODi).

(2) Set to the input capture function.

(3) Start the count (set bits TSTART0 and TSTART1 to 1).

When switching pins TRDIOAi, TRDIOBi, TRDIOCi, and TRDIODi from output mode to input mode, input capture operation may be performed depending on the pin states. When the digital filter is not used, edge detection is performed after two or more cycles of the timer RD operating clock (f_{TRD}) have elapsed. When the digital filter is used, edge detection is performed after five or more cycles of the sampling clock have elapsed.

8.5.6 External clock TRDCLK0

Set the pulse width of the external clock applied to the TRDCLK0 pin to three or more cycles of the timer RD operating clock (f_{TRD}).

8.5.7 Reset Synchronous PWM Mode

- When reset synchronous PWM mode is used for motor control, make sure OLS0 = OLS1.
- Set to reset synchronous PWM mode by the following procedure:

  [Changing procedure]

(1) Set the TSTART0 bit in the TRDSTR register to 0 (count stops).
(2) Set bits CMD1 and CMD0 in the TRDFCR register to 00B (timer mode, PWM mode, and PWM3 mode).
(3) Set bits CMD1 and CMD0 to 01B (reset synchronous PWM mode).
(4) Set the other registers associated with timer RD again.

8.5.8 Complementary PWM Mode

- When complementary PWM mode is used for motor control, make sure OLS0 = OLS1.
- Change bits CMD0 and CMD1 in the TRDFCR register in the following procedure.

Changing procedure: When setting to complementary PWM mode (including re-set), or changing the transfer timing from the buffer register to the general register in complementary PWM mode.

(1) Set both the TSTART0 and TSTART1 bits in the TRDSTR register to 0 (count stops).
(2) Set bits CMD1 and CMD0 in the TRDFCR register to 00B (timer mode, PWM mode, and PWM3 mode).
(3) Set bits CMD1 and CMD0 to 10B or 11B (complementary PWM mode).
(4) Set the registers associated with other timer RD again.

Changing procedure: When stopping complementary PWM mode

(1) Set both the TSTART0 and TSTART1 bits in the TRDSTR register to 0 (count stops).
(2) Set bits CMD1 to CMD0 to 00B (timer mode, PWM mode, and PWM3 mode).

- Do not write to the TRDGRA0, TRDGRB0, TRDGRA1, or TRDGRB1 register during operation.

  When changing the PWM waveform, transfer the values written to registers TRDGRD0, TRDGRC1, and TRDGRD1 to registers TRDGRB0, TRDGRA1, and TRDGRB1 using the buffer operation.

  However, to write data to the TRDGRD0, TRDGRC1, or TRDGRD1 register, set bits TRDBFD0, TRDBFC1, and TRDBFD1 to 0 (general register). After this, bits TRDBFD0, TRDBFC1, and TRDBFD1 may be set to 1 (buffer register). The PWM period cannot be changed.
- If the value set in the TRDGRA0 register is assumed to be m, the TRD0 register counts m - 1, m, m + 1, m, m - 1, in that order, when changing from increment to decrement operation.

  When changing from m to m + 1, the IMFA bit in the TRDSRi register is set to 1. Also, bits CMD1 and CMD0 in the TRDFCR register are set to 11B (complementary PWM mode, buffer data transferred at compare match between registers TRD0 and TRDGRA0), the content of the buffer registers (TRDGRD0, TRDGRC1, and TRDGRD1) is transferred to the general registers (TRDGRB0, TRDGRA1, and TRDGRB1).

  During operation of m + 1, m, and m - 1, the IMFA bit remains unchanged and data is not transferred to registers such as the TRDGRA0 register.

Figure 8-63. Operation at Compare Match between Registers TRD0 and TRDGRA0 in Complementary PWM Mode

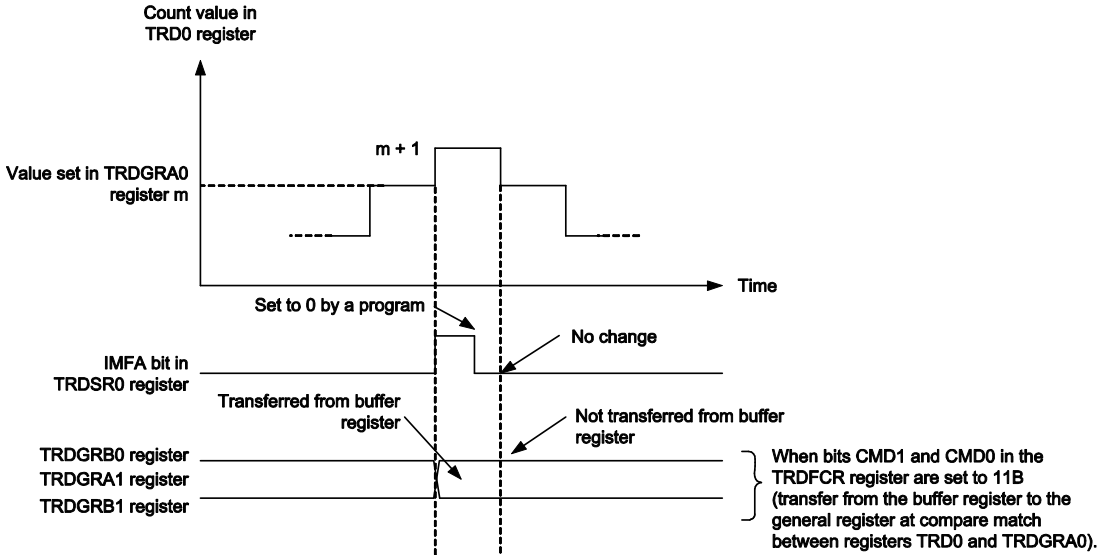

The TRD1 register counts 1, 0, FFFFH, 0, 1, in that order, when changing from decrement to increment operation. Counting from 1, to 0, to FFFFH causes the UDF bit in the TRDSRi register to be set to 1. Also, when bits CMD1 and CMD0 in the TRDFCR register are set to 10B (complementary PWM mode, buffer data transferred at underflow of the TRD1 register), the content of the buffer registers (TRDGRD0, TRDGRC1, and TRDGRD1) is transferred to the general registers (TRDGRB0, TRDGRA1, and TRDGRB1).
During operation of FFFFH, 0, and 1, data is not transferred to registers such as the TRDGRB0 register.
Also, at this time, the OVF bit in the TRDSRi register remains unchanged.

Figure 8-64. Operation When TRD1 Register Underflows in Complementary PWM Mode

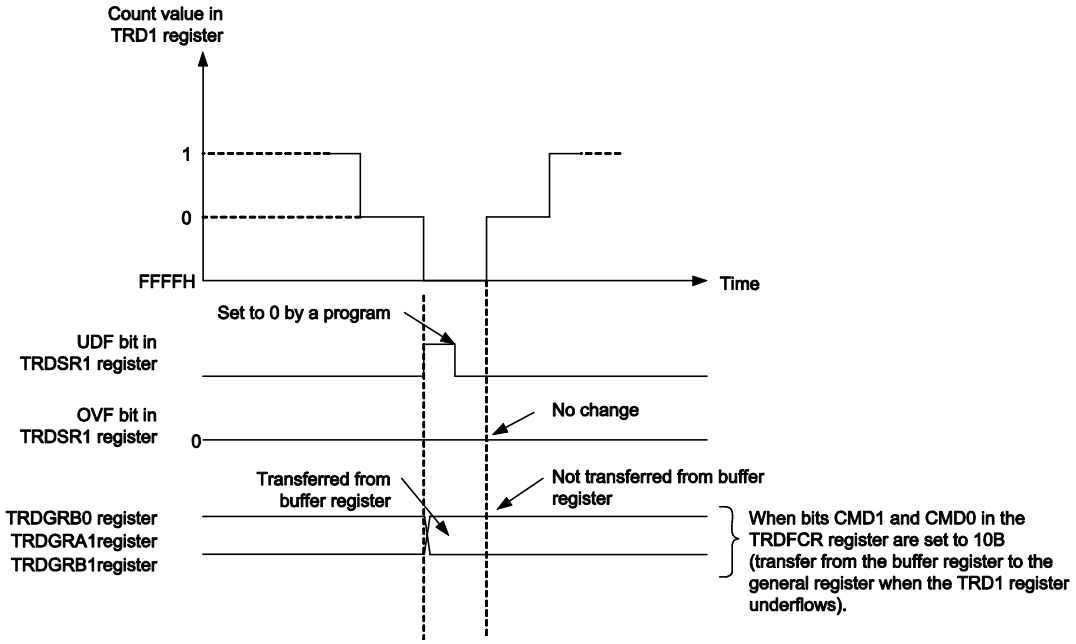

- The timing of data transfer from the buffer register to the general register should be selected using bits CMD0 and CMD1 in the TRDFCR register. However, regardless of the values of bits CMD0 and CMD1, transfer takes place with the following timing when duty cycle is 0% and duty cycle is 100%.

  Value in buffer register ≥ value in TRDGRA0 register (duty cycle is 0%):
  Transfer take place at underflow of the TRD1 register.
  After this, when the buffer register is set to 0001H or above and a smaller value than the value of the TRDGRA0 register, and the TRD1 register underflows for the first time after setting, the value is transferred to the general register. After that, the value is transferred with the timing selected by bits CMD1 and CMD0. A direct change of the duty from 0% to 100% is not possible.

  However, no waveform with duty cycle 0% can be generated while the initial value of the buffer register is FFFFH. To generate a waveform with duty cycle 0%, set the value of the buffer register ≥ TRDGRA0 by writing to the buffer register.

Figure 8-65. Operation When Value in Buffer Register ≥ Value in TRDGRA0 Register in Complementary PWM Mode

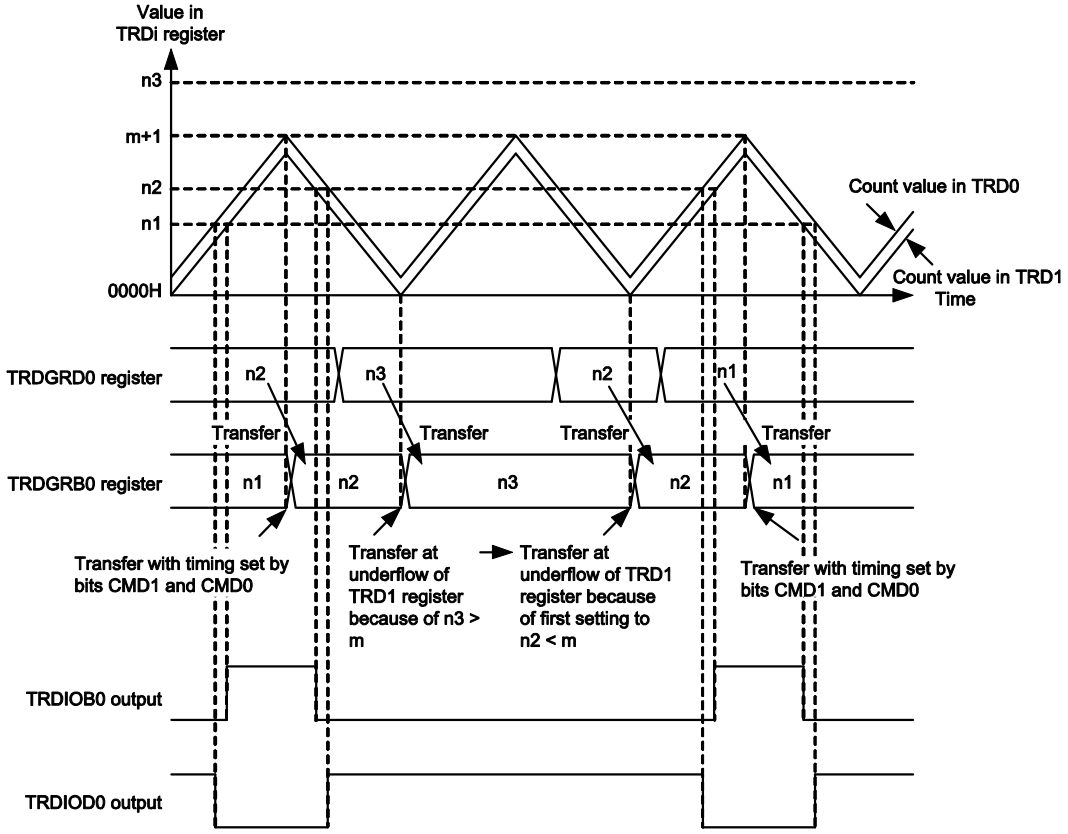

Remark
m: Value set in TRDGRA0 register

The above diagram applies under the following conditions :
- Bits CMD1 and CMD0 in the TRDFCR register are set to 11B
  (data in the buffer register is transferred at compare match between registers TRD 0 and TRDGRA0 in complementary PWM mode).
- Both the OSL0 and OLS1 bits in the TRDFCR register are set to 1 (active high for normal-phase and counter-phase).

When the value in the buffer register is set to 0000H (duty cycle is 100%):
Transfer takes place at compare match between registers TRD0 and TRDGRA0.
After this, when the buffer register is set to 0001H or above and a smaller value than the value of the TRDGRA0 register, and a compare match occurs between registers TRD0 and TRDGRA0 for the first time after setting, the value is transferred to the general register. After that, the value is transferred with the timing selected by bits CMD0 and CMD1. A direct change of the duty from 100% to 0% is not possible.

Figure 8-66. Operation When Value in Buffer Register is Set to 0000H in Complementary PWM Mode

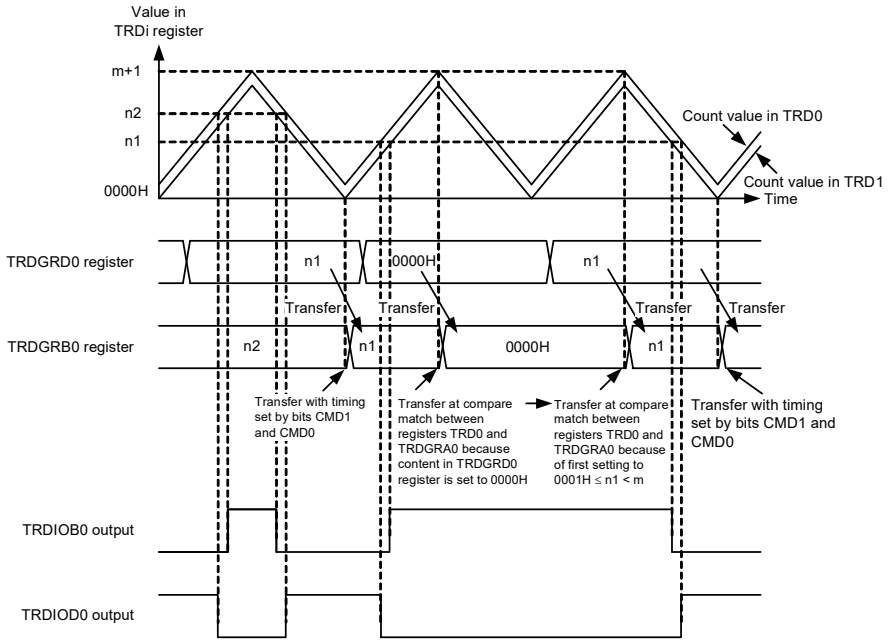

Remark
m: Value set in TRDGRA0 register

The above diagram applies under the following conditions :
- Bits CMD1 and CMD0 in the TRDFCR register are set to 10B (data in the buffer register is transferred at underflow of the TRD1 register in PWM mode).
- Both the OLS0 and OLS1 bits in the TRDFCR register are set to 1 (active high for normal-phase and counter-phase).

CHAPTER 9 REAL-TIME CLOCK

9.1 Functions of Real-time Clock

The real-time clock has the following features.

- Having counters of year, month, week, day, hour, minute, and second, and can count up to 99 years.
- Constant-period interrupt function (period: 0.5 seconds, 1 second, 1 minute, 1 hour, 1 day, 1 month)
- Alarm interrupt function (alarm: week, hour, minute)
- Pin output function of 1 Hz
- Watch error correction register

Caution The count of year, month, week, day, hour, minutes and second can only be performed when a subsystem clock (f_{SUB} = 32.768 kHz), high-speed on-chip oscillator (f_{IH} = 4 MHz or 8 MHz), or high-speed system clock (f_{MX} = 4 MHz, 8 MHz, 4.19 MHz, 8.38 MHz) is selected as the operation clock of the real-time clock. When selecting the high-speed on-chip oscillator or high-speed system clock, use the RTC clock select register (RTCCL) to select the clock and the frequency divisor.

9.2 Configuration of Real-time Clock

The real-time clock includes the following hardware.

Table 9-1. Configuration of Real-time Clock

Item	Configuration
Counter	Internal counter (16 bits)
Control registers	Peripheral enable register 0 (PER0)
	Operation speed mode control register (OSMC)
	Timer input select register 1 (TIS1)
	Timer input select register 2 (TIS2)
	RTC clock select register (RTCCL)
	Real-time clock control register 0 (RTCC0)
	Real-time clock control register 1 (RTCC1)
	Second count register (SEC)
	Minute count register (MIN)
	Hour count register (HOUR)
	Day count register (DAY)
	Week count register (WEEK)
	Month count register (MONTH)
	Year count register (YEAR)
	Watch error correction register (SUBCUD)
	16-bit watch error correction register (SUBCUDW)
	Alarm minute register (ALARMWM)
	Alarm hour register (ALARMWH)
	Alarm week register (ALARMWW)

Figure 9-1. Block Diagram of Real-time Clock

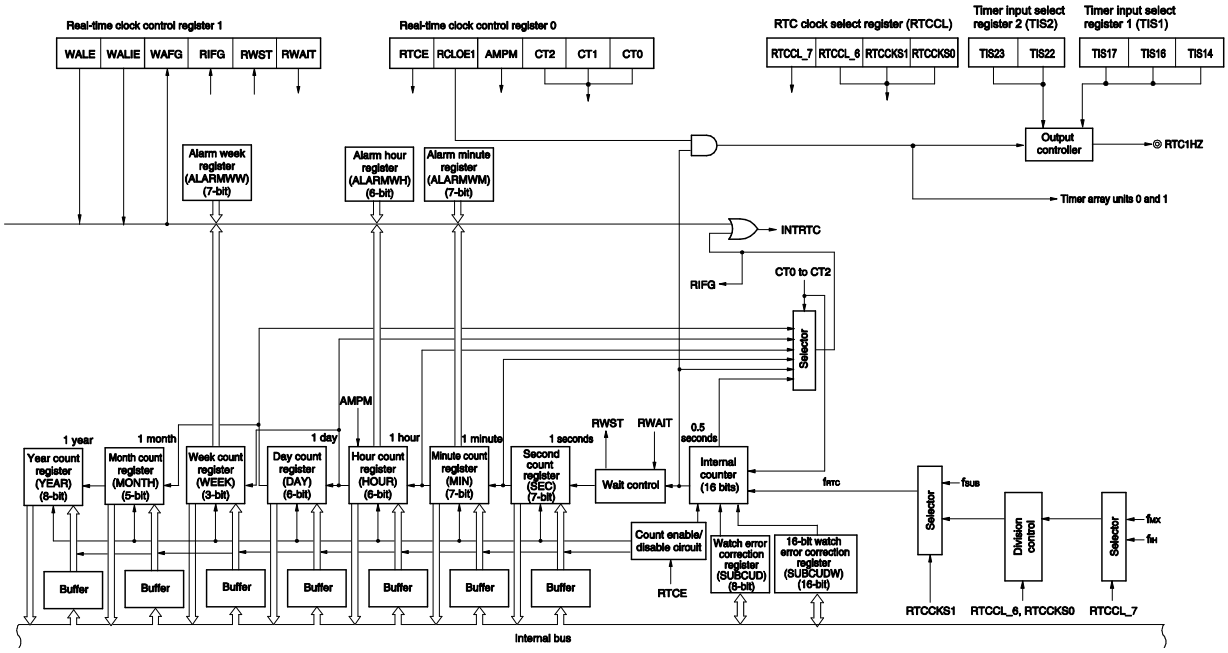

9.3 Registers Controlling Real-time Clock

The real-time clock is controlled by the following registers.

- Peripheral enable register 0 (PER0)
- Operation speed mode control register (OSMC)
- Timer input select register 1 (TIS1)
- Timer input select register 2 (TIS2)
- RTC clock select register (RTCCL)
- Real-time clock control register 0 (RTCC0)
- Real-time clock control register 1 (RTCC1)
- Second count register (SEC)
- Minute count register (MIN)
- Hour count register (HOUR)
- Day count register (DAY)
- Week count register (WEEK)
- Month count register (MONTH)
- Year count register (YEAR)
- Watch error correction register (SUBCUD)
- 16-bit watch error correction register (SUBCUDW)
- Alarm minute register (ALARMWM)
- Alarm hour register (ALARMWH)
- Alarm week register (ALARMWW)

9.3.1 Peripheral enable register 0 (PER0)

This register is used to enable or disable supplying the clock to the peripheral hardware. Clock supply to a hardware macro that is not used is stopped in order to reduce the power consumption and noise.

When the real-time clock is used, be sure to set the operation clock of the real-time clock by the RTCCL register before setting bit 7 (RTCEN) of this register to 1.

Set the PER0 register by a 1-bit or 8-bit memory manipulation instruction.

Reset signal generation clears this register to 00H.

Writing to the PER0 register is disabled when the GCSC bit of the IAWCTL register is set to 1.

Figure 9-2. Format of Peripheral Enable Register 0 (PER0)

Address: F00F0H After reset: 00H R/W

Symbol	<7>	6	<5>	<4>	<3>	<2>	<1>	<0>
PER0	RTCEN	0	ADCEN	IICA0EN Notes 1, 2	SAU1EN Note 1	SAU0EN	TAU1EN Note 1	TAU0EN

RTCEN	Control of input clock supply to real-time clock (RTC)
0	Stops input clock supply. • SFR used by the real-time clock (RTC) cannot be written. • The real-time clock (RTC) is in the reset status.
1	Enables input clock supply. • SFR used by the real-time clock (RTC) can be read/written.

Notes 1. Not provided in the RL78/F13 (LIN incorporated) products with 20, 30, 32, 48, or 64 pins and 16 Kbytes to 64 Kbytes of code flash memory.

2. Not provided in 30-pin products of the RL78/F13 (CAN and LIN incorporated) and 30-pin products of the RL78/F14.

Cautions 1. When using the real-time clock, first set the RTCEN bit to 1, while oscillation of the input clock (f_{RTC}) is stable. If RTCEN = 0, writing to a control register of the real-time clock is ignored, and, even if the register is read, only the default value is read (except for the operation speed mode control register (OSMC), timer input select registers 1 and 2 (TIS1 and TIS2), and RTC clock select register (RTCCL).

2. Clock supply to peripheral functions other than the real-time clock can be stopped in HALT mode when the subsystem/low-speed on-chip oscillator select clock is used, by setting the RTCLPC bit of the operation speed mode control register (OSMC) to 1.

<R>

3. Be sure to set the operating clock of the real-time clock by RTCCL register before setting bit 7 (RTCEN) of this register to 1.

4. Be sure to clear the following bits to 0.

- **Bits 1, 3, 4, and 6 in the RL78/F13 (LIN incorporated) products with 20, 30, 32, 48, or 64 pins and 16 Kbytes to 64 Kbytes of code flash memory**
- **Bits 4 and 6 in 30-pin products of the RL78/F13 (CAN and LIN incorporated) and in 30-pin products of the RL78/F14**
- **Bit 6 in the products other than above**

9.3.2 Operation speed mode control register (OSMC)

The RTCLPC bit can be used to reduce power consumption by stopping clock functions that are unnecessary. For details about setting the RTCLPC bit, see **CHAPTER 5 CLOCK GENERATOR**.

Set the OSMC register by an 8-bit memory manipulation instruction.

Reset signal generation clears this register to 00H.

Figure 9-3. Format of Operation Speed Mode Control Register (OSMC)

Address: F00F3H After reset: 00H R/W

Symbol	7	6	5	4	3	2	1	0
OSMC	RTCLPC	0	0	WUTMMCK0	0	0	0	0

RTCLPC	Setting in STOP mode or HALT mode while subsystem/low-speed on-chip oscillator select clock is selected as CPU clock
0	Enables supply of subsystem/low-speed on-chip oscillator select clock to peripheral functions (See **Table 23-1** for peripheral functions whose operations are enabled.)
1	Stops supply of subsystem/low-speed on-chip oscillator select clock to peripheral functions other than real-time clock.

9.3.3 Timer input select register 1 (TIS1)

The TIS1 register selects an input source of the timer array unit 0.

The TIS17, TIS16, and TIS14 bits in the TIS1 register are used in conjunction with the real time clock to implement the watch error correction in channels 7 and 6. When the TIS17 and TIS16 bits are set to 0 and 1 respectively, the RTC1HZ output signal is selected for the timer input of channel 7.

When the TIS14 bit is set to 1, the RTC1HZ output signal is selected for the timer input of channel 6.

Set the TIS1 register by an 8-bit memory manipulation instruction.

Reset signal generation clears this register to 00H.

Figure 9-4. Format of Timer Input Select Register 1 (TIS1)

Address: F0075H After reset: 00H R/W

Symbol	7	6	5	4	3	2	1	0
TIS1	TIS17	TIS16	0	TIS14	0	TIS12	0	TIS10

TIS17	TIS16	Selection of timer input used with channel 7 of timer array unit 0
0	0	Input signal of timer input pin (TI07)
0	1	RTC1HZ output signal
1	0	RxD0 pin (detection of the wake-up signal and measurement of the low-level width of the sync break field and the pulse width of the sync field)
1	1	Setting prohibited

TIS14	Selection of timer input used with channel 6 of timer array unit 0
0	Input signal of timer input pin (TI06)
1	RTC1HZ output signal

TIS12	Selection of timer input used with channel 5 of timer array unit 0
0	Input signal of timer input pin (TI05)
1	Input signal of timer input pin (TI03)

TIS10	Selection of timer input used with channel 4 of timer array unit 0
0	Input signal of timer input pin (TI04)
1	Input signal of timer input pin (TI03)

Cautions 1. Do not change the select bit of the timer input while inputting data to the TImn pin (m = 0, 1; n = 0 to 7).

2. When selecting the RTC1HZ output signal for the clock source of the timer input used in channels 7 and 6 in the TAU, set the TIS17, TIS16, and TIS14 bits to 0, 1, and 1 respectively and select the RTC1HZ output signal for the timer input of channels 7 and 6.

Remark Set the TIS17 and TIS16 bits to 1 and 0 respectively and select the input signal of the RxD0 pin before using the LIN-bus communication.

9.3.4 Timer input select register 2 (TIS2)

The TIS2 register selects an input source of the timer array unit 1.

The TIS23 and TIS22 bits in the TIS2 register are used in conjunction with the real time clock to implement the watch error correction in channels 7 and 6. When the TIS23 bit is set to 1, the RTC1HZ output signal is selected for the timer input of channel 7. When the TIS22 bit is set to 1, the RTC1HZ output signal is selected for the timer input of channel 6.

Set the TIS2 register by an 8-bit memory manipulation instruction.

Reset signal generation clears this register to 00H.

This function is valid only for the Group E products.

Figure 9-5. Format of Timer Input Select Register 2 (TIS2)

Address: F007AH After reset: 00H R/W

Symbol	7	6	5	4	3	2	1	0
TIS2	0	0	0	0	TIS23	TIS22	0	0

TIS22	Selection of timer input used with channel 6 of timer array unit 1
0	Input signal of timer input pin (TI16)
1	RTC1HZ output signal

TIS23	Selection of timer input used with channel 7 of timer array unit 1
0	Input signal of timer input pin (TI17)
1	RTC1HZ output signal

Cautions 1. Do not change the select bit of the timer input while inputting data to the TImn pin (m = 0, 1; n = 0 to 7).

2. When selecting the RTC1HZ output signal for the clock source of the timer input used in channels 7 and 6 in the TAU, set the TIS23 and TIS22 bits to 1 and select the RTC1HZ output signal for the timer input of channels 7 and 6.

9.3.5 RTC clock select register (RTCCL)

The RTCCL register is used to select the operation clock of the real-time clock.

Set the RTCCL register by a 1-bit or 8-bit memory manipulation instruction.

Reset signal generation clears this register to 00H.

Figure 9-6. Format of RTC clock select register (RTCCL)

Address: F02C8H After reset: 00H R/W

Symbol	7	6	5	4	3	2	1	0
<R> RTCCL	RTCCL_7	RTCCL_6	0	0	0	0	RTCCKS1	RTCCKS0

RTCCL_7	Control over operation of the low-speed on-chip oscillator
0	High-speed system clock (f_{MX})
1	High-speed on-chip oscillator clock (f_{IH})

RTCCKS1 Note 3	RTCCKS0	RTCCL_6	Control of RTC operating clock selection
0	0	×	Subsystem clock (f_{SUB}) Note 1
0	1	×	
1	0	0	f_{MX} or f_{IH} / 128 Note 2
1	0	1	f_{MX} or f_{IH} / 122 Note 2
1	1	0	f_{MX} or f_{IH} / 256 Note 2
1	1	1	f_{MX} or f_{IH} / 244 Note 2

Notes 1. When the SELLOSC bit in the CKSEL register is 1, the subsystem clock (f_{SUB}) cannot be supplied to the input clock (f_{RTC}) of the real time clock.

2. Switch after selecting RTCCL_7.

3. When setting the RTCCKS1 bit to 1, first set the CSS bit in the CKC register to 0 to select the main system/PLL select clock (f_{MP}) as the CPU/peripheral hardware clock (f_{CLK}).

<R> **Caution 20, 30, or 32-pin products do not have a subsystem clock (f_{SUB}), so it should not be selected.**

Remark ×: don't care

9.3.6 Real-time clock control register 0 (RTCC0)

The RTCC0 register is an 8-bit register that is used to start or stop the real-time clock operation, control the RTC1HZ pin, and set a 12- or 24-hour system and the constant-period interrupt function.

Set the RTCC0 register by a 1-bit or 8-bit memory manipulation instruction.

Reset signal generation clears this register to 00H.

Figure 9-7. Format of Real-time Clock Control Register 0 (RTCC0)

Address: FFF9DH After reset: 00H R/W

Symbol	<7>	6	<5>	4	3	2	1	0
RTCC0	RTCE	0	RCLOE1	0	AMPM	CT2	CT1	CT0

RTCE	Real-time clock operation control
0	Stops counter operation.
1	Starts counter operation.

RCLOE1	RTC1HZ pin output control
0	Disables output of the RTC1HZ pin (1 Hz).
1	Enables output of the RTC1HZ pin (1 Hz).

AMPM	Selection of 12-/24-hour system
0	12-hour system (a.m. and p.m. are displayed.)
1	24-hour system

- Rewrite the AMPM bit value after setting the RWAIT bit (bit 0 of real-time clock control register 1 (RTCC1)) to 1. If the AMPM bit value is changed, the values of the hour count register (HOUR) change according to the specified time system.
- Table 9-2 shows the displayed time digits that are displayed.

CT2	CT1	CT0	Constant-period interrupt (INTRTC) selection
0	0	0	Does not use fixed-cycle interrupt function.
0	0	1	Once per 0.5 s (synchronized with second count up)
0	1	0	Once per 1 s (same time as second count up)
0	1	1	Once per 1 m (second 00 of every minute)
1	0	0	Once per 1 hour (minute 00 and second 00 of every hour)
1	0	1	Once per 1 day (hour 00, minute 00, and second 00 of every day)
1	1	×	Once per 1 month (Day 1, hour 00 a.m., minute 00, and second 00 of every month)

When changing the values of the CT2 to CT0 bits while the counter operates (RTCE = 1), rewrite the values of the CT2 to CT0 bits after disabling interrupt servicing INTRTC by using the interrupt mask flag register. Furthermore, after rewriting the values of the CT2 to CT0 bits, enable interrupt servicing after clearing the RIFG and RTCIF flags.

<R> **Caution Do not change the value of the RCLOE1 bit when RTCE = 1.**

Remark ×: don't care

9.3.7 Real-time clock control register 1 (RTCC1)

The RTCC1 register is an 8-bit register that is used to control the alarm interrupt function and the wait time of the counter.

Set the RTCC1 register by a 1-bit or 8-bit memory manipulation instruction.

Reset signal generation clears this register to 00H.

Figure 9-8. Format of Real-time Clock Control Register 1 (RTCC1) (1/2)

Address: FFF9EH After reset: 00H R/W [Note]

Symbol	<7>	<6>	5	<4>	<3>	2	<1>	<0>
RTCC1	WALE	WALIE	0	WAFG	RIFG	0	RWST	RWAIT

WALE	Alarm operation control
0	Match operation is invalid.
1	Match operation is valid.
When setting a value to the WALE bit while the counter operates (RTCE = 1) and WALIE = 1, rewrite the WALE bit after disabling interrupt servicing INTRTC by using the interrupt mask flag register. Furthermore, clear the WAFG and RTCIF flags after rewriting the WALE bit. When setting each alarm register (WALIE flag of real-time clock control register 1 (RTCC1), the alarm minute register (ALARMWM), the alarm hour register (ALARMWH), and the alarm week register (ALARMWW)), set match operation to be invalid (“0”) for the WALE bit.	

WALIE	Control of alarm interrupt (INTRTC) function operation
0	Does not generate interrupt on matching of alarm.
1	Generates interrupt on matching of alarm.

WAFG	Alarm detection status flag
0	Alarm mismatch
1	Detection of matching of alarm
This is a status flag that indicates detection of matching with the alarm. It is valid only when WALE = 1 and is set to “1”, one operating clock (f_{RTC}) after matching of the alarm is detected. This flag is cleared when “0” is written to it. Writing “1” to it is invalid.	

Note Bit 1 is read-only.

Figure 9-8. Format of Real-time Clock Control Register 1 (RTCC1) (2/2)

RIFG	Constant-period interrupt status flag
0	Fixed-cycle interrupt is not generated.
1	Fixed-cycle interrupt is generated.
This flag indicates the status of generation of the fixed-cycle interrupt. When the fixed-cycle interrupt is generated, it is set to “1”. This flag is cleared when “0” is written to it. Writing “1” to it is invalid.	

RWST	Wait status flag of real-time clock
0	Counter is operating.
1	Mode to read or write counter value
This status flag indicates whether the setting of the RWAIT bit is valid. Before reading or writing the counter value, confirm that the value of this flag is 1.	

RWAIT	Wait control of real-time clock
0	Sets counter operation.
1	Stops SEC to YEAR counters. Mode to read or write counter value
This bit controls the operation of the counter. Be sure to write “1” to it to read or write the counter value. As the internal counter (16 bits) is continuing to run, complete reading or writing within one second and turn back to 0. When RWAIT = 1, it takes up to 1 operating clock (f_{RTC}) until the counter value can be read or written (RWST = 1). **Notes 1, 2** <R> When reading or writing to the counter is required while generation of the alarm interrupt is enabled, first set the CT2 to CT0 bits to 010B (generating the constant-period interrupt once per 1 second). Then, complete the processing from setting the RWAIT bit to 1 to setting it to 0 before generation of the next constant-period interrupt. When the internal counter (16 bits) overflowed while RWAIT = 1, it keeps the event of overflow until RWAIT = 0, then counts up. However, when it wrote a value to second count register, it will not keep the overflow event.	

Notes 1. When setting RWAIT=1 during 1 operating clock (f_{RTC}) after setting RTCE=1, it may take two clock time of the operation clock(f_{RTC}) until RWST bit becomes “1”.

Notes 2. When setting RWAIT=1 during 1 operating clock (f_{RTC}) after returning from a stand-by (HALT mode, STOP mode, SNOOZE mode), it may take two clock time of the operation clock(f_{RTC}) until RWST bit becomes “1”.

Caution **If writing is performed to the RTCC1 register with a 1-bit manipulation instruction, the RIFG flag and WAFG flag may be cleared. Therefore, to perform writing to the RTCC1 register, be sure to use an 8-bit manipulation instruction. To prevent the RIFG flag and WAFG flag from being cleared during writing, disable writing by setting 1 to the corresponding bit. If the RIFG flag and WAFG flag are not used and the value may be changed, the RTCC1 register may be written by using a 1-bit manipulation instruction.**

Remarks 1. Fixed-cycle interrupts and alarm match interrupts use the same interrupt source (INTRTC). When using these two types of interrupts at the same time, which interrupt occurred can be judged by checking the fixed-cycle interrupt status flag (RIFG) and the alarm detection status flag (WAFG) upon INTRTC occurrence.

2. If writing is performed to the second count register (SEC), the internal counter (16 bits) is cleared.

9.3.8 Second count register (SEC)

The SEC register is an 8-bit register that takes a value of 0 to 59 (decimal) and indicates the count value of seconds.

It counts up when the internal counter (16 bits) overflows.

When data is written to this register, it is written to a buffer and then to the counter up to 2 operating clocks (f_{RTC}) later. Set a decimal value of 00 to 59 to this register in BCD code.

Set the SEC register by an 8-bit memory manipulation instruction.

Reset signal generation clears this register to 00H.

Figure 9-9. Format of Second Count Register (SEC)

Address: FFF92H After reset: 00H R/W

Symbol	7	6	5	4	3	2	1	0
SEC	0	SEC40	SEC20	SEC10	SEC8	SEC4	SEC2	SEC1

Caution When it reads or writes from/to the register while the counter is in operation (RTCE = 1), see 9.4.3 Reading/writing real-time clock and follow the described procedures.

Remark If writing is performed to the second count register (SEC), the internal counter (16 bits) is cleared.

9.3.9 Minute count register (MIN)

The MIN register is an 8-bit register that takes a value of 0 to 59 (decimal) and indicates the count value of minutes.

It counts up when the second counter overflows.

When data is written to this register, it is written to a buffer and then to the counter up to 2 operating clocks (f_{RTC}) later. Even if the second count register overflows while this register is being written, this register ignores the overflow and is set to the value written. Set a decimal value of 00 to 59 to this register in BCD code.

Set the MIN register by an 8-bit memory manipulation instruction.

Reset signal generation clears this register to 00H.

Figure 9-10. Format of Minute Count Register (MIN)

Address: FFF93H After reset: 00H R/W

Symbol	7	6	5	4	3	2	1	0
MIN	0	MIN40	MIN20	MIN10	MIN8	MIN4	MIN2	MIN1

Caution When it reads or writes from/to the register while the counter is in operation (RTCE = 1), see 9.4.3 Reading/writing real-time clock and follow the described procedures.

9.3.10 Hour count register (HOUR)

The HOUR register is an 8-bit register that takes a value of 00 to 23 or 01 to 12 and 21 to 32 (decimal) and indicates the count value of hours.

It counts up when the minute counter overflows.

When data is written to this register, it is written to a buffer and then to the counter up to 2 operating clocks (f_{RTC}) later. Even if the minute count register overflows while this register is being written, this register ignores the overflow and is set to the value written. Specify a decimal value of 00 to 23, 01 to 12, or 21 to 32 by using BCD code according to the time system specified using bit 3 (AMPM) of real-time clock control register 0 (RTCC0).

If the AMPM bit value is changed, the values of the HOUR register change according to the specified time system.

Set the HOUR register by an 8-bit memory manipulation instruction.

Reset signal generation clears this register to 12H.

However, the value of this register is 00H if the AMPM bit (bit 3 of the RTCC0 register) is set to 1 after reset.

Figure 9-11. Format of Hour Count Register (HOUR)

Address: FFF94H After reset: 12H R/W

Symbol	7	6	5	4	3	2	1	0
HOUR	0	0	HOUR20	HOUR10	HOUR8	HOUR4	HOUR2	HOUR1

Cautions 1. Bit 5 (HOUR20) of the HOUR register indicates AM(0)/PM(1) if AMPM = 0 (if the 12-hour system is selected).

2. When it reads or writes from/to the register while the counter is in operation (RTCE = 1), follow the procedures described in 9.4.3 Reading/writing real-time clock.

Table 9-2 shows the relationship between the setting value of the AMPM bit, the hour count register (HOUR) value, and time.

Table 9-2. Displayed Time Digits

<R>

24-Hour Display (AMPM = 1)		12-Hour Display (AMPM = 0)	
Time	HOUR Register	Time	HOUR Register
0	00H	12 a.m.	12H
1	01H	1 a.m.	01H
2	02H	2 a.m.	02H
3	03H	3 a.m.	03H
4	04H	4 a.m.	04H
5	05H	5 a.m.	05H
6	06H	6 a.m.	06H
7	07H	7 a.m.	07H
8	08H	8 a.m.	08H
9	09H	9 a.m.	09H
10	10H	10 a.m.	10H
11	11H	11 a.m.	11H
12	12H	12 p.m.	32H
13	13H	1 p.m.	21H
14	14H	2 p.m.	22H
15	15H	3 p.m.	23H
16	16H	4 p.m.	24H
17	17H	5 p.m.	25H
18	18H	6 p.m.	26H
19	19H	7 p.m.	27H
20	20H	8 p.m.	28H
21	21H	9 p.m.	29H
22	22H	10 p.m.	30H
23	23H	11 p.m.	31H

The HOUR register value is set to 12-hour display when the AMPM bit is “0” and to 24-hour display when the AMPM bit is “1”.

In 12-hour display, the fifth bit of the HOUR register displays 0 for AM and 1 for PM.

9.3.11 Day count register (DAY)

The DAY register is an 8-bit register that takes a value of 1 to 31 (decimal) and indicates the count value of days.
It counts up when the hour counter overflows.
This counter counts as follows.

- 01 to 31 (January, March, May, July, August, October, December)
- 01 to 30 (April, June, September, November)
- 01 to 29 (February, leap year)
- 01 to 28 (February, normal year)

When data is written to this register, it is written to a buffer and then to the counter up to 2 operating clocks (f_{RTC}) later. Even if the hour count register overflows while this register is being written, this register ignores the overflow and is set to the value written. Set a decimal value of 01 to 31 to this register in BCD code.
Set the DAY register by an 8-bit memory manipulation instruction.
Reset signal generation clears this register to 01H.

Figure 9-12. Format of Day Count Register (DAY)

Address: FFF96H After reset: 01H R/W

Symbol	7	6	5	4	3	2	1	0
DAY	0	0	DAY20	DAY10	DAY8	DAY4	DAY2	DAY1

Caution When it reads or writes from/to the register while the counter is in operation (RTCE = 1), see 9.4.3 Reading/writing real-time clock and follow the described procedures.

9.3.12 Week count register (WEEK)

The WEEK register is an 8-bit register that takes a value of 0 to 6 (decimal) and indicates the count value of weekdays.

It counts up in synchronization with the day counter.

When data is written to this register, it is written to a buffer and then to the counter up to 2 operating clocks (f_{RTC}) later. Set a decimal value of 00 to 06 to this register in BCD code.

Set the WEEK register by an 8-bit memory manipulation instruction.

Reset signal generation clears this register to 00H.

Figure 9-13. Format of Week Count Register (WEEK)

Address: FFF95H After reset: 00H R/W

Symbol	7	6	5	4	3	2	1	0
WEEK	0	0	0	0	0	WEEK4	WEEK2	WEEK1

Cautions 1. The value corresponding to the month count register (MONTH) or the day count register (DAY) is not stored in the week count register (WEEK) automatically. After reset release, set the week count register as follow.

Day	WEEK
Sunday	00H
Monday	01H
Tuesday	02H
Wednesday	03H
Thursday	04H
Friday	05H
Saturday	06H

2. When it reads or writes from/to the register while the counter is in operation (RTCE = 1), see 9.4.3 Reading/writing real-time clock and follow the described procedures.

9.3.13 Month count register (MONTH)

The MONTH register is an 8-bit register that takes a value of 1 to 12 (decimal) and indicates the count value of months.

It counts up when the day counter overflows.

When data is written to this register, it is written to a buffer and then to the counter up to 2 operating clocks (f_{RTC}) later. Even if the day count register overflows while this register is being written, this register ignores the overflow and is set to the value written. Set a decimal value of 01 to 12 to this register in BCD code.

Set the MONTH register by an 8-bit memory manipulation instruction.

Reset signal generation clears this register to 01H.

Figure 9-14. Format of Month Count Register (MONTH)

Address: FFF97H After reset: 01H R/W

Symbol	7	6	5	4	3	2	1	0
MONTH	0	0	0	MONTH10	MONTH8	MONTH4	MONTH2	MONTH1

Caution When it reads or writes from/to the register while the counter is in operation (RTCE = 1), see 9.4.3 Reading/writing real-time clock and follow the described procedures.

9.3.14 Year count register (YEAR)

The YEAR register is an 8-bit register that takes a value of 0 to 99 (decimal) and indicates the count value of years.

It counts up when the month count register (MONTH) overflows.

Values 00, 04, 08, …, 92, and 96 indicate a leap year.

When data is written to this register, it is written to a buffer and then to the counter up to 2 operating clocks (f_{RTC}) later. Even if the MONTH register overflows while this register is being written, this register ignores the overflow and is set to the value written. Set a decimal value of 00 to 99 to this register in BCD code.

Set the YEAR register by an 8-bit memory manipulation instruction.

Reset signal generation clears this register to 00H.

Figure 9-15. Format of Year Count Register (YEAR)

Address: FFF98H After reset: 00H R/W

Symbol	7	6	5	4	3	2	1	0
YEAR	YEAR80	YEAR40	YEAR20	YEAR10	YEAR8	YEAR4	YEAR2	YEAR1

Caution When it reads or writes from/to the register while the counter is in operation (RTCE = 1), see 9.4.3 Reading/writing real-time clock and follow the described procedures.

9.3.15 Watch error correction register (SUBCUD)

This register is used to correct the watch with high accuracy when it is slow or fast by changing the value that overflows from the internal counter (16 bits) to the second count register (SEC) (reference value: 7FFFH).

Set the SUBCUD register by an 8-bit memory manipulation instruction.

Reset signal generation clears this register to 00H.

Figure 9-16. Format of Watch Error Correction Register (SUBCUD)

Address: FFF99H After reset: 00H R/W

Symbol	7	6	5	4	3	2	1	0
SUBCUD	DEV	F12	F5	F4	F3	F2	F1	F0

DEV	Setting of watch error correction timing
0	Corrects watch error when the second digits are at 00, 20, or 40 (every 20 seconds).
1	Corrects watch error only when the second digits are at 00 (every 60 seconds).
Writing to the SUBCUD register at the following timing is prohibited. • When DEV = 0 is set: For a period of SEC = 00H, 20H, 40H • When DEV = 1 is set: For a period of SEC = 00H	

F12	Setting of watch error correction value
0	Increases by {(F5, F4, F3, F2, F1, F0) – 1} × 2.
1	Decreases by {(/F5, /F4, /F3, /F2, /F1, /F0) + 1} × 2.
When (F12, F5, F4, F3, F2, F1, F0) = (*, 0, 0, 0, 0, 0, *), the watch error is not corrected. Range of correction value: (when F12 = 0) 2, 4, 6, 8, … , 120, 122, 124 (when F12 = 1) –2, –4, –6, –8, … , –120, –122, –124	

Cautions 1. / of /Fn (n = 0 to 5) means invert.
2. * means 0 or 1.

The range of value that can be corrected by using the watch error correction register (SUBCUD) is shown below.

	DEV = 0 (correction every 20 seconds)	DEV = 1 (correction every 60 seconds)
Correctable range	–189.2 ppm to 189.2 ppm	–63.1 ppm to 63.1 ppm
Maximum excludes quantization error	± 1.53 ppm	± 0.51 ppm
Minimum resolution	± 3.05 ppm	± 1.02 ppm

Remark If a correctable range is –63.1 ppm or lower and 63.1 ppm or higher, set 0 to DEV.

9.3.16 16-bit watch error correction register (SUBCUDW)

This register is used to correct the watch with high accuracy when it is slow or fast by changing the value that overflows from the internal counter (16 bits) to the second count register (SEC) (reference value: 7FFFH).

Set the SUBCUDW register by a 16-bit memory manipulation instruction.

Reset signal generation clears this register to 0000H.

Figure 9-17. Format of 16-Bit Watch Error Correction Register (SUBCUDW)

Address: FFF54H After reset: 0000H R/W

Symbol	15	14	13	12	11	10	9	8
SUBCUDW	DEV	-	-	F12	F11	F10	F9	F8

7	6	5	4	3	2	1	0
F7	F6	F5	F4	F3	F2	F1	F0

DEV	Setting of watch error correction timing
0	Corrects watch error when the second digits are at 00, 20, or 40 (every 20 seconds).
1	Corrects watch error only when the second digits are at 00 (every 60 seconds).
Writing to the SUBCUDW register at the following timing is prohibited. • When DEV = 0 is set: For a period of SEC = 00H, 20H, 40H • When DEV = 1 is set: For a period of SEC = 00H	

F12	Setting of watch error correction value
0	Increases by {(F11, F10, F9, F8, F7, F6, F5, F4, F3, F2, F1, F0) – 1} × 2.
1	Decreases by {(/F11, /F10, /F9, /F8, /F7, /F6, /F5, /F4, /F3, /F2, /F1, /F0) + 1} × 2.
When (F12, F11, F10, F9, F8, F7, F6, F5, F4, F3, F2, F1, F0) = (*, 0, 0, 0, 0, 0, 0, 0, 0, 0, 0, 0, *), the watch error is not corrected. Range of correction value: (when F12 = 0) 2, 4, 6, 8, … , 8184, 8186, 8188 (when F12 = 1) –2, –4, –6, –8, … , –8184, –8186, –8188	

Cautions 1. / of /Fn (n = 0 to 11) means invert.

2. * means 0 or 1.

The range of value that can be corrected by using the 16-bit watch error correction register (SUBCUDW) is shown below.

	DEV = 0 (correction every 20 seconds)	DEV = 1 (correction every 60 seconds)
Correctable range	–12496.9 ppm to 12496.9 ppm	–4165.6 ppm to 4165.6 ppm
Maximum excludes quantization error	± 1.53 ppm	± 0.51 ppm
Minimum resolution	± 3.05 ppm	± 1.02 ppm

Remark If a correctable range is −4165.6 ppm or lower and 4165.6 ppm or higher, set DEV to 0.

9.3.17 Alarm minute register (ALARMWM)

This register is used to set minutes of alarm.

Set the ALARMWM register by an 8-bit memory manipulation instruction.

Reset signal generation clears this register to 00H.

Caution Set a decimal value of 00 to 59 to this register in BCD code. If a value outside the range is set, the alarm is not detected.

Figure 9-18. Format of Alarm Minute Register (ALARMWM)

Address: FFF9AH After reset: 00H R/W

Symbol	7	6	5	4	3	2	1	0
ALARMWM	0	WM40	WM20	WM10	WM8	WM4	WM2	WM1

9.3.18 Alarm hour register (ALARMWH)

This register is used to set hours of alarm.

Set the ALARMWH register can be set by an 8-bit memory manipulation instruction.

Reset signal generation clears this register to 12H.

However, the value of this register is 00H if the AMPM bit is set to 1 after reset.

Caution Set a decimal value of 00 to 23, 01 to 12, or 21 to 32 to this register in BCD code. If a value outside the range is set, the alarm is not detected.

Figure 9-19. Format of Alarm Hour Register (ALARMWH)

Address: FFF9BH After reset: 12H R/W

Symbol	7	6	5	4	3	2	1	0
ALARMWH	0	0	WH20	WH10	WH8	WH4	WH2	WH1

Caution Bit 5 (WH20) of the ALARMWH register indicates AM(0)/PM(1) if AMPM = 0 (if the 12-hour system is selected).

9.3.19 Alarm week register (ALARMWW)

This register is used to set date of alarm.

Set the ALARMWW register by an 8-bit memory manipulation instruction.

Reset signal generation clears this register to 00H.

Figure 9-20. Format of Alarm Week Register (ALARMWW)

Address: FFF9CH After reset: 00H R/W

Symbol	7	6	5	4	3	2	1	0
ALARMWW	0	WW6	WW5	WW4	WW3	WW2	WW1	WW0

Here is an example of setting the alarm.

Time of Alarm	Day							12-Hour Display				24-Hour Display			
	Sunday WW0	Monday WW1	Tuesday WW2	Wednesday WW3	Thursday WW4	Friday WW5	Saturday WW6	Hour 10	Hour 1	Minute 10	Minute 1	Hour 10	Hour 1	Minute 10	Minute 1
Every day, 0:00 a.m.	1	1	1	1	1	1	1	1	2	0	0	0	0	0	0
Every day, 1:30 a.m.	1	1	1	1	1	1	1	0	1	3	0	0	1	3	0
Every day, 11:59 a.m.	1	1	1	1	1	1	1	1	1	5	9	1	1	5	9
Monday through Friday, 0:00 p.m.	0	1	1	1	1	1	0	3	2	0	0	1	2	0	0
Sunday, 1:30 p.m.	1	0	0	0	0	0	0	2	1	3	0	1	3	3	0
Monday, Wednesday, Friday, 11:59 p.m.	0	1	0	1	0	1	0	3	1	5	9	2	3	5	9

9.4 Real-time Clock Operation

9.4.1 Starting operation of real-time clock

Figure 9-21. Procedure for Starting Operation of Real-time Clock

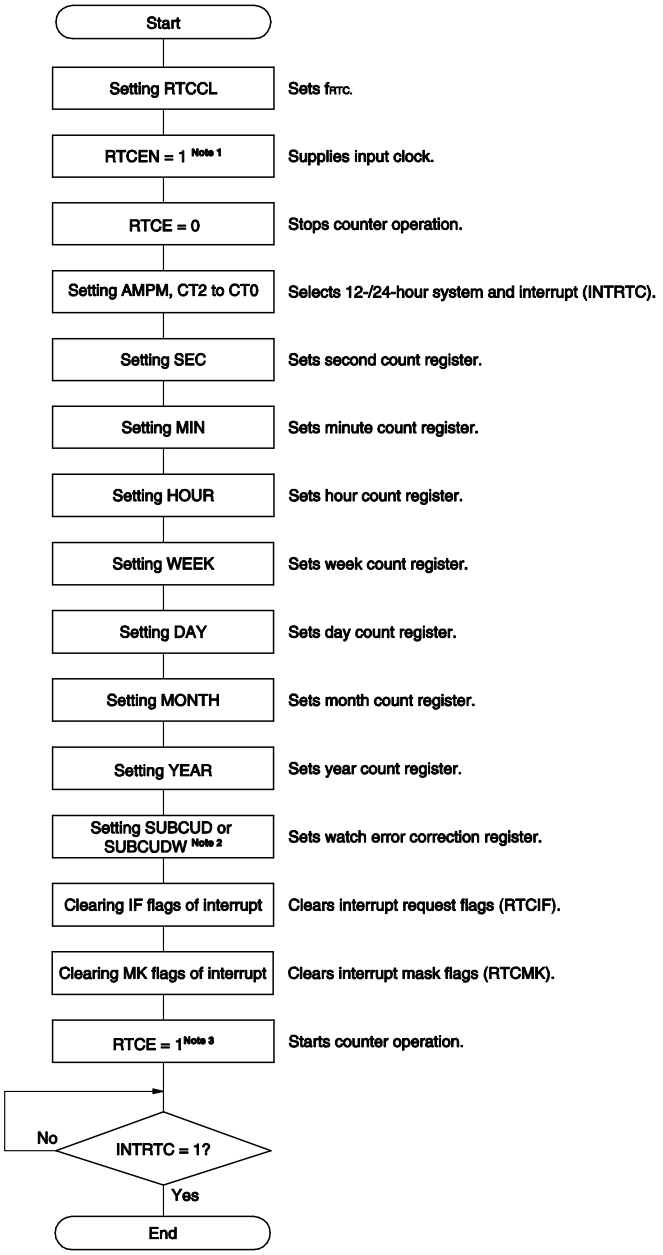

Notes 1. First set the RTCEN bit to 1, while oscillation of the input clock (f_{RTC}) is stable.

2. Set up the SUBCUD register only if the watch error must be corrected. Set up the SUBCUDW register if the watch must be corrected with high accuracy. For details about how to calculate the correction value, see **9.4.6 Example of watch error correction of real-time clock**.

3. Confirm the procedure described in **9.4.2 Shifting to HALT/STOP mode after starting operation** when shifting to HALT/STOP mode without waiting for INTRTC = 1 after RTCE = 1.

9.4.2 Shifting to HALT/STOP mode after starting operation

Perform one of the following processing when shifting to HALT/STOP mode immediately after setting the RTCE bit to 1.

However, after setting the RTCE bit to 1, this processing is not required when shifting to HALT/STOP mode after INTRTC interrupt has occurred.

- Shifting to HALT/STOP mode when at least two operating clocks (f_{RTC}) have elapsed after setting the RTCE bit to 1 (see **Figure 9-20**, **Example 1**).
- Checking by polling the RWST bit to become 1, after setting the RTCE bit to 1 and then setting the RWAIT bit to 1. Afterward, setting the RWAIT bit to 0 and shifting to HALT/STOP mode after checking again by polling that the RWST bit has become 0 (see **Figure 9-20**, **Example 2**).

Figure 9-22. Procedure for Shifting to HALT/STOP Mode After Setting RTCE bit to 1

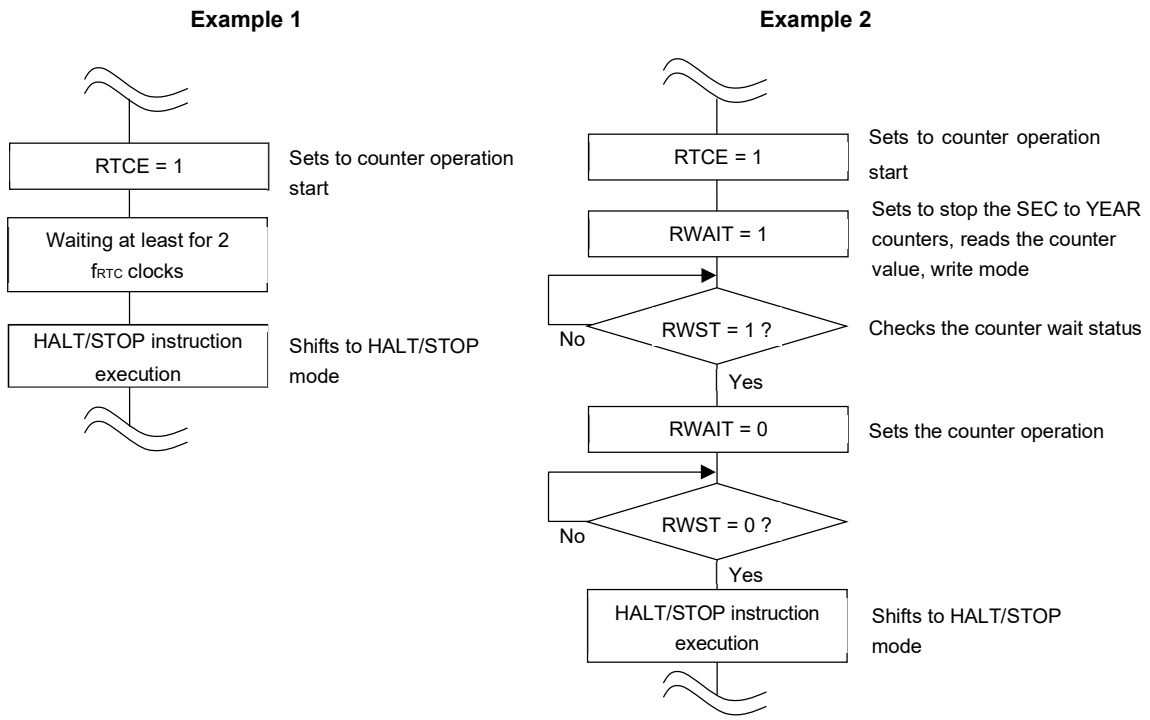

9.4.3 Reading/writing real-time clock

Read or write the counter after setting 1 to RWAIT first.

Set RWAIT to 0 after completion of reading or writing the counter.

Figure 9-23. Procedure for Reading Real-time Clock

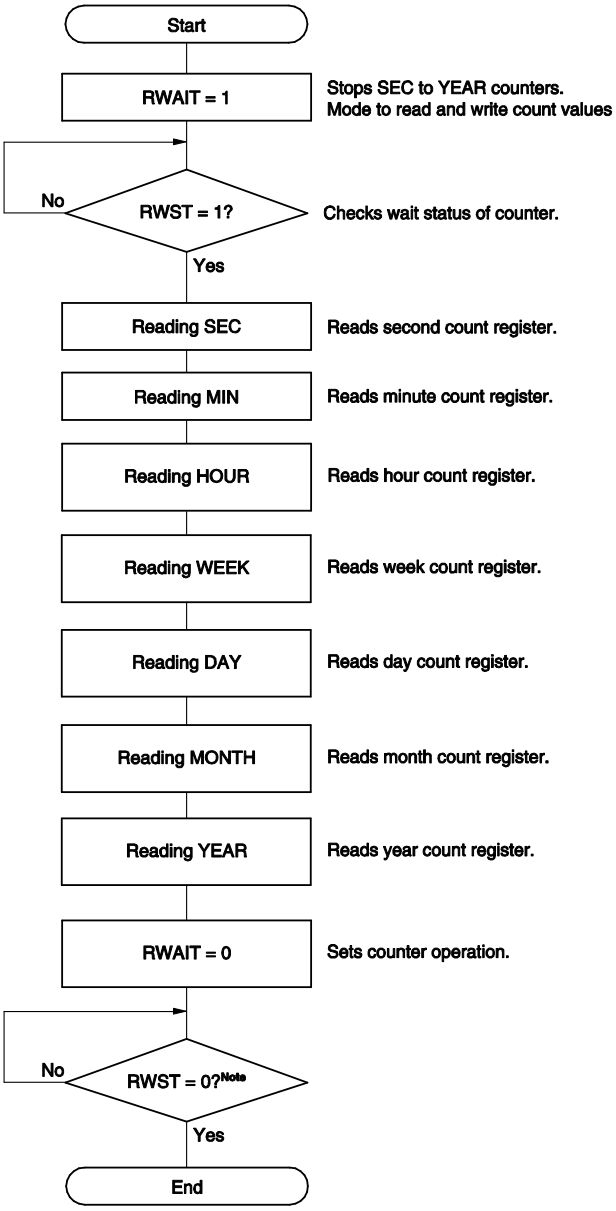

Note Be sure to confirm that RWST = 0 before setting HALT/STOP mode.

<R> **Caution Complete the series of process of setting the RWAIT bit to 1 to clearing the RWAIT bit to 0 within 1 second. When reading to the counter is required while generation of the alarm interrupt is enabled, first set the CT2 to CT0 bits to 010B (generating the constant-period interrupt once per 1 second). Then, complete the processing from setting the RWAIT bit to 1 to setting it to 0 before generation of the next constant-period interrupt.**

Remark The second count register (SEC), minute count register (MIN), hour count register (HOUR), week count register (WEEK), day count register (DAY), month count register (MONTH), and year count register (YEAR) may be read in any sequence.
All the registers do not have to read and only some registers may be read.

Figure 9-24. Procedure for Writing Real-time Clock

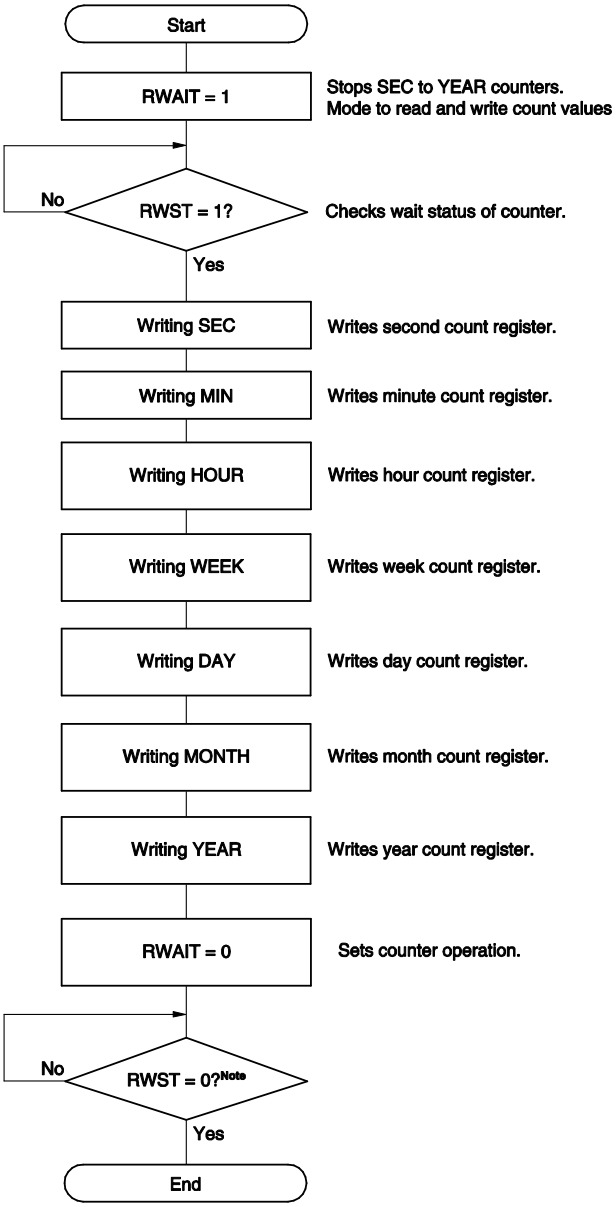

Note Be sure to confirm that RWST = 0 before setting HALT/STOP mode.

<R> **Cautions 1. Complete the series of operations of setting the RWAIT bit to 1 to clearing the RWAIT bit to 0 within 1 second. When writing to the counter is required while generation of the alarm interrupt is enabled, first set the CT2 to CT0 bits to 010B (generating the constant-period interrupt once per 1 second). Then, complete the processing from setting the RWAIT bit to 1 to setting it to 0 before generation of the next constant-period interrupt.**

2. When changing the values of the SEC, MIN, HOUR, WEEK, DAY, MONTH, and YEAR register while the counter operates (RTCE = 1), rewrite the values of the MIN register after disabling interrupt servicing INTRTC by using the interrupt mask flag register. Furthermore, clear the WAFG, RIFG and RTCIF flags after rewriting the MIN register.

Remark The second count register (SEC), minute count register (MIN), hour count register (HOUR), week count register (WEEK), day count register (DAY), month count register (MONTH), and year count register (YEAR) may be written in any sequence.

All the registers do not have to be set and only some registers may be written.

9.4.4 Setting alarm of real-time clock

Set time of alarm after setting 0 to WALE first.

Figure 9-25. Alarm Setting Procedure

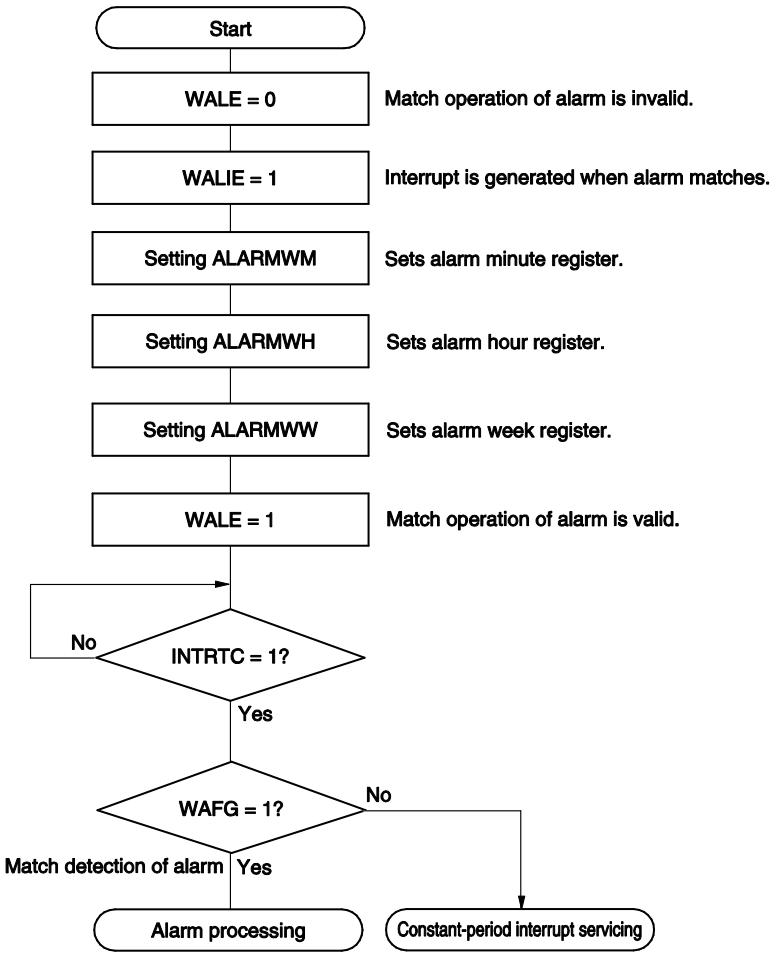

<R> **Remarks 1.** The alarm minute register (ALARMWM), alarm hour register (ALARMWH), and alarm week register (ALARMWW) may be written in any sequence.

2. Fixed-cycle interrupts and alarm match interrupts use the same interrupt source (INTRTC). When using these two types of interrupts at the same time, which interrupt occurred can be judged by checking the fixed-cycle interrupt status flag (RIFG) and the alarm detection status flag (WAFG) upon INTRTC occurrence.

9.4.5 1 Hz output of real-time clock

Figure 9-26. 1 Hz Output Setting Procedure

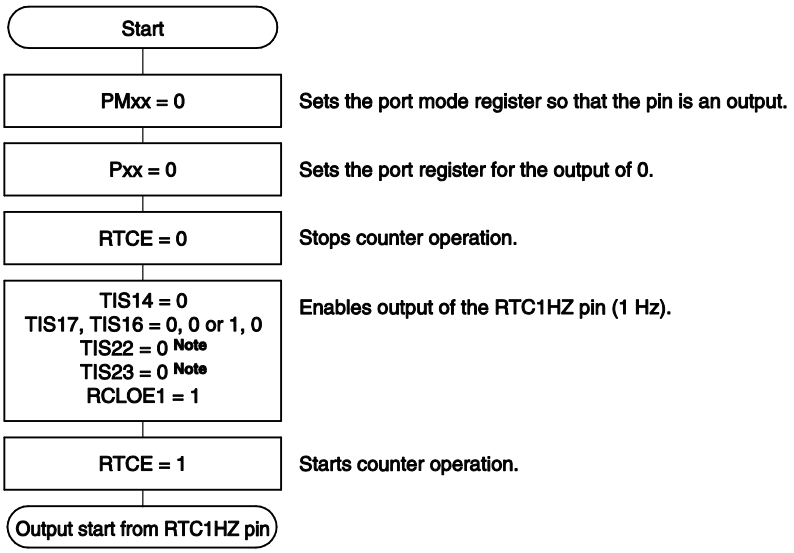

Note The timer input select register 2 (TIS2) is only available in the RL78/F14 products with 48, 64, or 80 pins and 128 Kbytes to 256 Kbytes of code flash memory or with 100 pins and 64 Kbytes to 256 Kbytes of code flash memory.

Caution First set the RTCEN bit to 1 while oscillation of the input clock (f_{RTC}) is stable.

9.4.6 Example of watch error correction of real-time clock

The watch can be corrected with high accuracy when it is slow or fast, by setting a value to the 16-bit watch error correction register (SUBCUDW).

(1) Example of calculating the correction value

The correction value used when correcting the count value of the internal counter (16 bits) is calculated by using the following expression.

Set the DEV bit to 0 when the correction range is –4165.6 ppm or less, or 4165.6 ppm or more.

(When DEV = 0)

Correction value[Note] = Number of correction counts in 1 minute ÷ 3 = (Oscillation frequency ÷ Target frequency – 1) × 32768 × 60 ÷ 3

(When DEV = 1)

Correction value[Note] = Number of correction counts in 1 minute = (Oscillation frequency ÷ Target frequency – 1) × 32768 × 60

Note The correction value is the watch error correction value calculated by using bits 12 to 0 of the 16-bit watch error correction register (SUBCUDW).

(When F12 = 0) Correction value = {(F11, F10, F9, F8, F7, F6, F5, F4, F3, F2, F1, F0) – 1} × 2

(When F12 = 1) Correction value = – {(/F11, /F10, /F9, /F8, /F7, /F6, /F5, /F4, /F3, /F2, /F1, /F0) + 1} × 2

When (F12, F11, F10, F9, F8, F7, F6, F5, F4, F3, F2, F1, F0) is (*, 0, 0, 0, 0, 0, 0, 0, 0, 0, 0, 0, *), watch error correction is not performed. “*” is 0 or 1.

/F11 to /F0 are bit-inverted values (000000000011 when 111111111100).

Remarks 1. The correction value is 2, 4, 6, 8, … 8186, 8188 or –2, –4, –6, –8, … –8186, –8188.

2. The oscillation frequency is the input clock (f_{RTC}).

It can be calculated from the output frequency of the RTC1HZ pin × 32768 when the 16-bit watch error correction register (SUBCUDW) is set to its initial value (0000H).

3. The target frequency is the frequency resulting after correction performed by using the 16-bit watch error correction register (SUBCUDW).

(2) Correction example

Example of correcting from 32767.4 Hz to 32768 Hz (32767.4 Hz + 18.3 ppm)

[Measuring the oscillation frequency]

The oscillation frequency [Note 1] of each product is measured by outputting about 1 Hz from the RTC1HZ pin when the watch error correction register (SUBCUD, SUBCUDW) is set to its initial value (0000H). The frequency can also be measured by selecting [Note 2] RTC1HZ for the input of timer array unit.

Notes 1. See **9.4.5 1 Hz output of real-time clock** for the setting procedure of outputting about 1 Hz from the RTC1HZ pin. For input selection of timer array unit, see **6.3.9 Timer input select register 1 (TIS1)** and **6.3.10 Timer input select register 2 (TIS2).**

2. The RTC1HZ signal is not output from the RTC1HZ pin when the RTC1HZ output signal is selected for the input to timer array unit by the setting of the timer input select register 1 or 2 (TIS1 or TIS2).

[Calculating the correction value]

(When the output frequency from the RTCCL pin is 0.9999817 Hz)

Oscillation frequency = 32768 × 0.9999817 ≈ 32767.4 Hz

Assume the target frequency to be 32768 Hz (32767.4 Hz + 18.3 ppm) and DEV to be 1.

The expression for calculating the correction value when DEV is 1 is applied.

Correction value = Number of correction counts in 1 minute
= (Oscillation frequency ÷ Target frequency − 1) × 32768 × 60
= (32767.4 ÷ 32768 − 1) × 32768 × 60
= −36

[Calculating the values to be set to (F12 to F0)]

(When the correction value is −36)

If the correction value is 0 or less (when quickening), assume F12 to be 1.

Calculate (F11, F10, F9, F8, F7, F6, F5, F4, F3, F2, F1, F0) from the correction value.

− {(/F11, /F10, /F9, /F8, /F7, /F6, /F5, /F4, /F3, /F2, /F1, /F0) − 1} × 2 = −36
(/F11, /F10, /F9, /F8, /F7, /F6, /F5, /F4, /F3, /F2, /F1, /F0) = 17
(/F11, /F10, /F9, /F8, /F7, /F6, /F5, /F4, /F3, /F2, /F1, /F0) = (0, 0, 0, 0, 0, 0, 0, 1, 0, 0, 0, 1)
(F11, F10, F9, F8, F7, F6, F5, F4, F3, F2, F1, F0) = (1, 1, 1, 1, 1, 1, 1, 0, 1, 1, 1, 0)

Consequently, when correcting from 32767.4 Hz to 32768 Hz (32767.4 Hz + 18.3 ppm), setting the correction register such that DEV is 1 and the correction value is −36 (bits 12 to 0 of the SUBCUDW register: 1111111101110) results in 32768 Hz (0 ppm).

<R> Figure 9-27 shows the operation when (DEV, F12, F11, F10, F9, F8, F7, F6, F5, F4, F3, F2, F1, F0) is (1, 1, 1, 1, 1, 1, 1, 1, 1, 0, 1, 1, 1, 0).

<R>

Figure 9-27. Operation when (DEV, F12, F11, F10, F9, F8, F7, F6, F5, F4, F3, F2, F1, F0) = (1, 1, 1, 1, 1, 1, 1, 1, 1, 1, 1, 0, 1, 1, 1, 0)

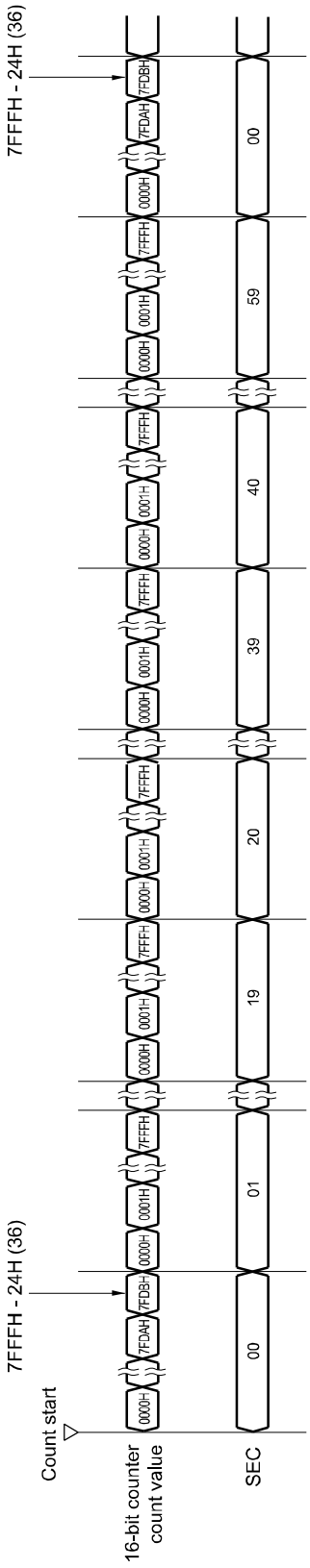

CHAPTER 10 CLOCK OUTPUT/BUZZER OUTPUT CONTROLLER

Whether the output pin for the clock and buzzer output controller is present depends on the product.

Output pin	20, 30, and 32-pin products	48, 64, 80, and 100-pin products
PCLBUZ0	—	√

Caution Most of the following descriptions in this chapter use the 80-pin as an example.

10.1 Functions of Clock Output/Buzzer Output Controller

The clock output controller is intended for carrier output during remote controlled transmission and clock output for supply to peripheral ICs.

Buzzer output is a function to output a square wave of buzzer frequency.

One pin can be used to output a clock or buzzer sound.

The PCLBUZ0 pin outputs a clock selected by clock output select register 0 (CKS0).

Figure 10-1 shows the block diagram of clock output/buzzer output controller.

Caution In the low-consumption RTC mode (when the RTCLPC bit of the operation speed mode control register (OSMC) = 1), it is not possible to output the sub/low-speed on-chip oscillator select clock (f_{SL}) from the PCLBUZ0 pin.

Figure 10-1. Block Diagram of Clock Output/Buzzer Output Controller

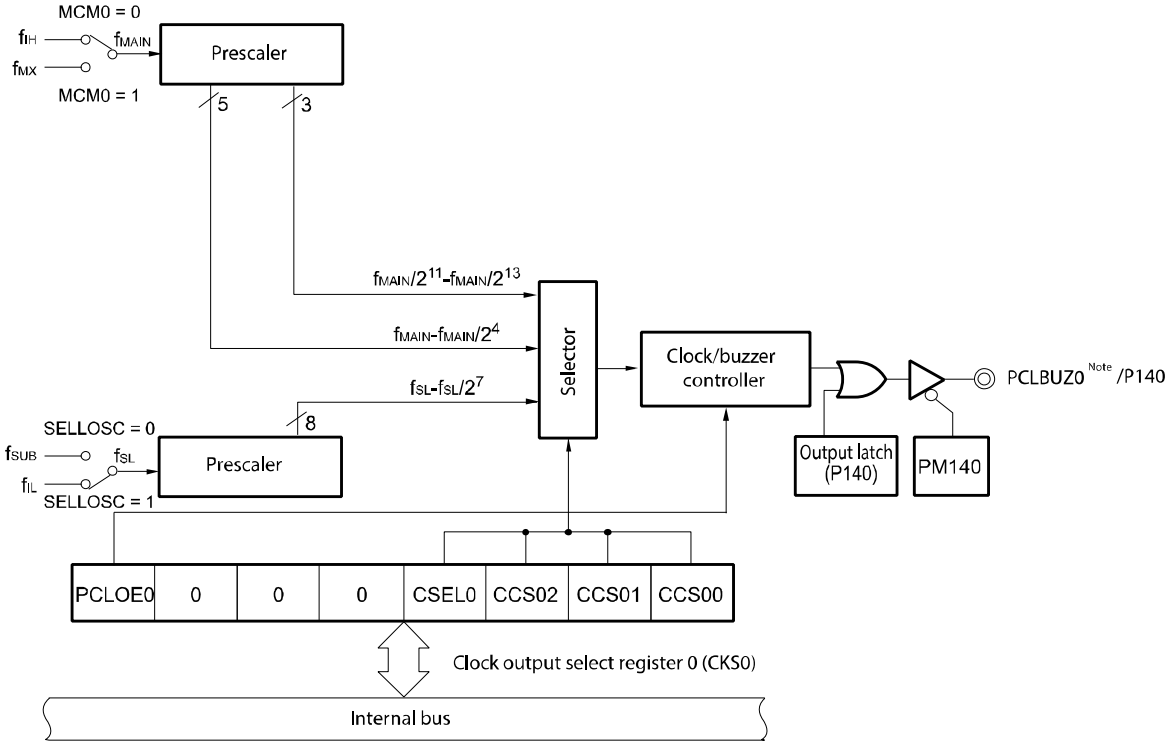

<R>

Note For output frequencies available from PCLBUZ0, refer to the AC characteristics in **CHAPTER 34** to **CHAPTER 36 ELECTRICAL SPECIFICATIONS**.

10.2 Configuration of Clock Output/Buzzer Output Controller

The clock output/buzzer output controller includes the following hardware.

Table 10-1. Configuration of Clock Output/Buzzer Output Controller

Item	Configuration
Control registers	Clock output select registers 0 (CKS0) Port mode register 14 (PM14) Port register 14 (P14)

10.3 Registers Controlling Clock Output/Buzzer Output Controller

The following registers are used to control the clock output/buzzer output controller.

- Clock output select registers 0 (CKS0)
- Port mode register 14 (PM14)
- Port register 14 (P14)

10.3.1 Clock output select register 0 (CKS0)

These registers set output enable/disable for clock output or for the buzzer frequency output pin (PCLBUZ0), and set the output clock.

Select the clock to be output from the PCLBUZ0 pin by using the CKS0 register.

The CKS0 register are set by a 1-bit or 8-bit memory manipulation instruction.

Reset signal generation clears this register to 00H.

Figure 10-2. Format of Clock Output Select Register 0 (CKS0)

<R> Address: FFFA5H After reset: 00H R/W

Symbol	<7>	6	5	4	3	2	1	0
CKS0	PCLOE0	0	0	0	CSEL0	CCS02	CCS01	CCS00

PCLOE0	PCLBUZ0 pin output enable/disable specification
0	Output disable (default)
1	Output enable

CSEL0	CCS02	CCS01	CCS00	PCLBUZ0 pin output clock selection						
					f_{MAIN} = 5 MHz	f_{MAIN} = 10 MHz	f_{MAIN} = 20 MHz	f_{MAIN} = 32 MHz	f_{MAIN} = 48 MHz	f_{MAIN} = 64 MHz
0	0	0	0	f_{MAIN}	5 MHz	10 MHz Note	Setting prohibited Note	Setting prohibited Note	Setting prohibited Note	Setting prohibited Note
0	0	0	1	$f_{MAIN}/2$	2.5 MHz	5 MHz	10 MHz Note	16 MHz Note	Setting prohibited Note	Setting prohibited Note
0	0	1	0	$f_{MAIN}/2^2$	1.25 MHz	2.5 MHz	5 MHz	8 MHz	12 MHz Note	16 MHz Note
0	0	1	1	$f_{MAIN}/2^3$	625 kHz	1.25 MHz	2.5 MHz	4 MHz	6 MHz	8 MHz
0	1	0	0	$f_{MAIN}/2^4$	312.5 kHz	625 kHz	1.25 MHz	2 MHz	3 MHz	4 MHz
0	1	0	1	$f_{MAIN}/2^{11}$	2.44 kHz	4.88 kHz	9.76 kHz	15.62 kHz	23.43 kHz	31.25 kHz
0	1	1	0	$f_{MAIN}/2^{12}$	1.22 kHz	2.44 kHz	4.88 kHz	7.81 kHz	11.71 kHz	15.12 kHz
0	1	1	1	$f_{MAIN}/2^{13}$	610 Hz	1.22 kHz	2.44 kHz	3.90 kHz	5.85 kHz	7.81 kHz
1	0	0	0	f_{SL}	32.768 kHz (f_{SUB}) or 15 kHz (f_{IL})					
1	0	0	1	$f_{SL}/2$	16.384 kHz (f_{SUB}) or 7.5 kHz (f_{IL})					
1	0	1	0	$f_{SL}/2^2$	8.192 kHz (f_{SUB}) or 3.75 kHz (f_{IL})					
1	0	1	1	$f_{SL}/2^3$	4.096 kHz (f_{SUB}) or 1.87 kHz (f_{IL})					
1	1	0	0	$f_{SL}/2^4$	2.048 kHz (f_{SUB}) or 937.5 Hz (f_{IL})					
1	1	0	1	$f_{SL}/2^5$	1.024 kHz (f_{SUB}) or 468.75 Hz (f_{IL})					
1	1	1	0	$f_{SL}/2^6$	512 Hz (f_{SUB}) or 234.37 Hz (f_{IL})					
1	1	1	1	$f_{SL}/2^7$	256 Hz (f_{SUB}) or 117.18 Hz (f_{IL})					

Note Use the output clock within a range of 16 MHz. See the AC characteristics in **CHAPTER 34** to **CHAPTER 36 ELECTRICAL SPECIFICATIONS** for details.

Cautions 1. Change the output clock and the CSEL0 and CCS02 to CCS00 bits after disabling clock output (PCLOE0 = 0).

2. To shift to STOP mode when the main system clock is selected (CSEL0 = 0), set PCLOE0 = 0 before executing the STOP instruction. When the subsystem clock is selected (CSEL0 = 1), PCLOE0 = 1 can be set because the clock can be output in STOP mode.

3. In the low-consumption RTC mode (when the RTCLPC bit of the operation speed mode control register (OSMC) = 1), it is not possible to output the subsystem/low-speed on-chip oscillator select clock (f_{SL}) from the PCLBUZ0 pin.

4. **The high-speed on-chip oscillator clock (f_{IH}) and the high-speed system clock (f_{MX}) can be selected as the main system clock (f_{MAIN}) by the setting of the MCM0 bit (bit 4 of the system clock control register (CKC)). For details, refer to CHAPTER 5 CLOCK GENERATOR.**
5. **The subsystem clock (f_{SUB}) and the low-speed on-chip oscillator clock (f_{IL}) can be selected as the sub/low-speed on-chip oscillator select clock by the setting of the SELLOSC bit (bit 0 of the clock select register (CKSEL)). For details, refer to CHAPTER 5 CLOCK GENERATOR.**

10.3.2 Clock Select Register (CKSEL)

This register is used to select the CPU clock (f_{SUB}/f_{IL}) the clocks for the timer RJ, timer RD, and clock output/buzzer output. Together with the CMC register, the SELLOSC bit is used to set the operation mode of the subsystem clock. For details, see **Figure 5-3 Format of Clock Operation Mode Control Register (CMC)**.

Set the CKSEL register by a 1-bit or 8-bit memory manipulation instruction.

Writing to the CKSEL register is disabled when the GCSC bit of the IAWCTL register is set to 1.

Figure 10-3. Format of Clock Select Register (CKSEL)

Address: F02C4H After reset: 00H R/W

Symbol	7	6	5	4	3	<2>	1	<0>
CKSEL	0	0	0	0	0	TRD_CKSEL	0	SELLOSC Notes 3, 4

SELLOSC Notes 3, 4	Control of sub/low-speed on-chip oscillator selection clock (f_{SL}) selection
0	Selects f_{SUB} Note 1
1	Selects f_{IL} Note 2

Notes 1. When setting f_{SUB} as the CPU/peripheral hardware clock, first set the SELLOSC bit to 0 and then set the CSS bit in the CKC register to 1.

2. When setting f_{IL} as the CPU/peripheral hardware clock, first set the SELLOSC bit to 1 and then set the CSS bit in the CKC register to 1.

3. When the SELLOSC bit is set to 1, the low-speed on-chip oscillator operates.

4. When setting the CKSEL register in the 20-, 30-, or 32-pin products, set the SELLOSC bit to 1.

10.3.3 Port mode register 14 (PM14)

<R> This register set input/output of port in 1-bit units.

When using the P140/PCLBUZ0 pins for clock output and buzzer output, clear PM140 bit and the output latch of P140 to 0.

The PM14 register can be set by a 1-bit or 8-bit memory manipulation instruction.

<R> Reset signal generation sets this register to FFH.

Figure 10-4. Format of Port Mode Register 14 (PM14)

Address: FFF2EH After reset: FFH R/W

Symbol	7	6	5	4	3	2	1	0
PM14	1	1	1	1	1	1	1	PM140

PMmn	Pmn pin I/O mode selection (mn = 140)
0	Output mode (output buffer on)
1	Input mode (output buffer off)

10.4 Operations of Clock Output/Buzzer Output Controller

One pin can be used to output a clock or buzzer sound.
The PCLBUZ0 pin outputs a clock/buzzer selected by the clock output select register 0 (CKS0).

10.4.1 Operation as output pin

The PCLBUZ0 pin is output as the following procedures.

<1> Set the bit in the port mode register 14 (PM14) and the bit in the port register 14 (P14) corresponding to the port used as a PCLBUZ0 pin.

<R> <2> Select the output clock with bits 0 to 3 (CCS00 to CCS02, CSEL0) of the clock output select register 0 (CKS0) of the PCLBUZ0 pin (output in disabled status).

<3> Set bit 7 (PCLOE0) of the CKS0 register to 1 to enable clock/buzzer output.

Remark The controller used for outputting the clock starts or stops outputting the clock one clock after enabling or disabling clock output (PCLOE0 bit) is switched. At this time, pulses with a narrow width are not output. Figure 10-5 shows enabling or stopping output using the PCLOE0 bit and the timing of outputting the clock.

Figure 10-5. Remote Control Output Application Example

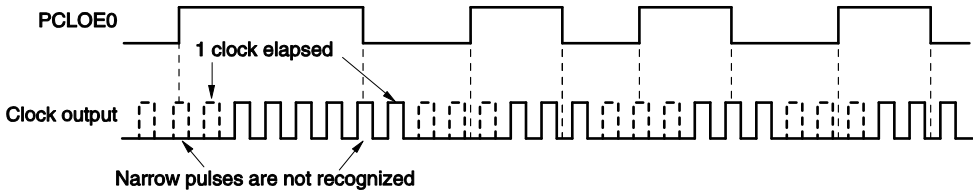

10.5 Notes on Clock Output/Buzzer Output Controller

When the CPU enters STOP mode within 1.5 clock cycles of main system clock after the setting to disable output is made (PCLOE0 = 0) while the main system clock is selected for PCLBUZ0 output (CSEL0 = 0), the pulse width of the PCLBUZ0 output is narrowed.

CHAPTER 11 WATCHDOG TIMER

11.1 Functions of Watchdog Timer

The watchdog timer operates on the WDT-dedicated low-speed on-chip oscillator clock (f_{WDT}).

The watchdog timer is used to detect an inadvertent program loop. If a program loop is detected, an internal reset signal is generated.

Program loop is detected in the following cases.

- If the watchdog timer counter overflows
- If a 1-bit manipulation instruction is executed on the watchdog timer enable register (WDTE)
- If data other than “ACH” is written to the WDTE register
- If data is written to the WDTE register during a window close period

When a reset occurs due to the watchdog timer, bit 4 (WDCLRF) of the reset control flag register (RESF) is set to 1. For details of the RESF register, see **CHAPTER 24 RESET FUNCTION**.

When 75% of the overflow time + 1/2 f_{WDT} is reached, an interval interrupt can be generated.

11.2 Configuration of Watchdog Timer

The watchdog timer includes the following hardware.

Table 11-1. Configuration of Watchdog Timer

Item	Configuration
Counter	Internal counter (17 bits)
Control register	Watchdog timer enable register (WDTE)

How the internal counter (17 bits) operation is controlled, overflow time, window open period, and interval interrupt are set by the option byte.

Caution Set the same value as 000C0H to 020C0H when the boot swap operation is used because 000C0H is replaced by 020C0H.

Table 11-2. Setting of Option Bytes and Watchdog Timer

Setting of Watchdog Timer	Option Byte (000C0H)
Watchdog timer interval interrupt	Bit 7 (WDTINT)
Window open period	Bits 6 and 5 (WINDOW1, WINDOW0)
Controlling counter operation of watchdog timer	Bit 4 (WDTON)
Overflow time of watchdog timer	Bits 3 to 1 (WDCS2 to WDCS0)
Controlling counter operation of watchdog timer (in HALT/STOP/SNOOZE mode)	Bit 0 (WDSTBYON)

Remark For the option byte, see **CHAPTER 29 OPTION BYTE**.

Figure 11-1. Block Diagram of Watchdog Timer

<R>

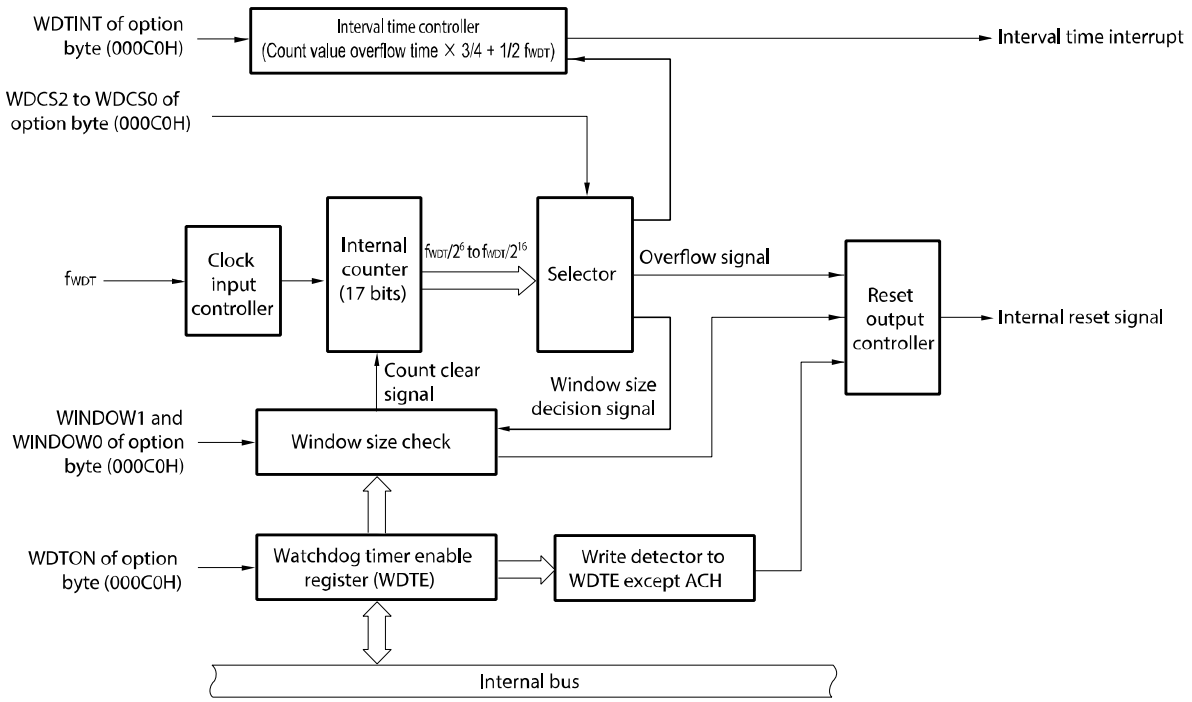

11.3 Register Controlling Watchdog Timer

The watchdog timer is controlled by the watchdog timer enable register (WDTE).

11.3.1 Watchdog timer enable register (WDTE)

When the WDTON bit in the option byte (000C0H) is 1, writing ACH to the WDTE register clears the watchdog timer counter and starts counting again.

This register can be set by an 8-bit memory manipulation instruction.

Reset signal generation sets this register to 1AH or 9AH[Note].

Figure 11-2. Format of Watchdog Timer Enable Register (WDTE)

Address: FFFABH After reset: 1AH/9AH[Note] R/W

Symbol	7	6	5	4	3	2	1	0
WDTE								

Note The WDTE register reset value differs depending on the WDTON bit setting value of the option byte (000C0H). To operate watchdog timer, set the WDTON bit to 1.

WDTON Bit Setting Value	WDTE Register Reset Value
0 (watchdog timer count operation disabled)	1AH
1 (watchdog timer count operation enabled)	9AH

Cautions 1. When the WDTON bit in the option byte (000C0H) is 1, if a value other than "ACH" is written to the WDTE register, an internal reset signal is generated.

2. When the WDTON bit in the option byte (000C0H) is 1, if a 1-bit memory manipulation instruction is executed for the WDTE register, an internal reset signal is generated.

3. The value read from the WDTE register is 1AH/9AH (this differs from the written value (ACH) as specified in the WDTON bit of the option byte (000C0H)).

11.4 Operation of Watchdog Timer

11.4.1 Controlling operation of watchdog timer

1. When the watchdog timer is used, its operation is specified by the option byte (000C0H).

   - Enable counting operation of the watchdog timer by setting bit 4 (WDTON) of the option byte (000C0H) to 1 (the counter starts operating after a reset release) (for details, see **CHAPTER 29 OPTION BYTE**).

WDTON	Watchdog Timer Counter
0	Counter operation disabled (counting stopped after reset)
1	Counter operation enabled (counting started after reset)

   - Set an overflow time by using bits 3 to 1 (WDCS2 to WDCS0) of the option byte (000C0H) (for details, see **11.4.2 Setting overflow time of watchdog timer** and **CHAPTER 29 OPTION BYTE**).
   - Set a window open period by using bits 6 and 5 (WINDOW1 and WINDOW0) of the option byte (000C0H) (for details, see **11.4.3 Setting window open period of watchdog timer** and **CHAPTER 29 OPTION BYTE**).

2. After a reset release, the watchdog timer starts counting.
3. By writing “ACH” to the watchdog timer enable register (WDTE) after the watchdog timer starts counting and before the overflow time set by the option byte, the watchdog timer counter is cleared and starts counting again.
4. After that, write the WDTE register the second time or later after a reset release during the window open period. If the WDTE register is written during a window close period, an internal reset signal is generated.
5. If the overflow time expires without “ACH” written to the WDTE register, an internal reset signal is generated.
   An internal reset signal is generated in the following cases.

   - If a 1-bit manipulation instruction is executed on the WDTE register
   - If data other than “ACH” is written to the WDTE register

Cautions 1. When data is written to the watchdog timer enable register (WDTE) for the first time after reset release, the watchdog timer counter is cleared in any timing regardless of the window open time, as long as the register is written before the overflow time, and the watchdog timer counter starts counting again.

<R> **2. If the watchdog timer counter is cleared by writing “ACH” to the WDTE register, the actual overflow time may be different from the overflow time set by the option byte by up to 2/f_{WDT} seconds.**

3. The watchdog timer counter can be cleared immediately before the count value overflows.

4. The operation of the watchdog timer in the HALT, STOP, and SNOOZE modes differs as follows depending on the set value of bit 0 (WDSTBYON) and bit 4 (WDTON) of the option byte (000C0H).

	WDTON = 1 and WDSTBYON = 0	WDTON = 1 and WDSTBYON = 1
In HALT mode	Watchdog timer operation stops.	Watchdog timer operation continues.
In STOP mode		
In SNOOZE mode		

If WDSTBYON = 0, the watchdog timer resumes counting after the HALT, STOP, or SNOOZE modes is released. At this time, the counter is cleared to 0 and counting starts.
When operating with the X1 oscillation clock after releasing the STOP mode, the CPU starts operating after the oscillation stabilization time has elapsed.
Therefore, if the period between the STOP mode release and the watchdog timer overflow is short, an overflow occurs during the oscillation stabilization time, causing a reset.
Consequently, set the overflow time in consideration of the oscillation stabilization time when operating with the X1 oscillation clock and when the watchdog timer counter is to be cleared after the STOP mode release by an interval interrupt.

11.4.2 Setting overflow time of watchdog timer

Set the overflow time of the watchdog timer by using bits 3 to 1 (WDCS2 to WDCS0) of the option byte (000C0H).

If an overflow occurs, an internal reset signal is generated. The present count is cleared and the watchdog timer starts counting again by writing “ACH” to the watchdog timer enable register (WDTE) during the window open period before the overflow time.

The following overflow times can be set.

Table 11-3. Setting of Overflow Time of Watchdog Timer

WDCS2	WDCS1	WDCS0	Overflow Time of Watchdog Timer (f_{WDT} = 17.25 kHz (MAX.))
0	0	0	$2^6/f_{WDT}$ (3.71 ms)
0	0	1	$2^7/f_{WDT}$ (7.42 ms)
0	1	0	$2^8/f_{WDT}$ (14.84 ms)
0	1	1	$2^9/f_{WDT}$ (29.68 ms)
1	0	0	$2^{11}/f_{WDT}$ (118.72 ms)
1	0	1	$2^{13}/f_{WDT}$ Note (474.89 ms)
1	1	0	$2^{14}/f_{WDT}$ Note (949.79 ms)
1	1	1	$2^{16}/f_{WDT}$ Note (3799.18 ms)

Note When the interval interrupt of watchdog timer is used, do not set the overflow time to $2^{13}/f_{WDT}$, $2^{14}/f_{WDT}$ or $2^{16}/f_{WDT}$.

Remark f_{WDT}: WDT-dedicated low-speed on-chip oscillator clock frequency

11.4.3 Setting window open period of watchdog timer

Set the window open period of the watchdog timer by using bits 6 and 5 (WINDOW1, WINDOW0) of the option byte (000C0H). The outline of the window is as follows.

- If “ACH” is written to the watchdog timer enable register (WDTE) during the window open period, the watchdog timer counter is cleared and starts counting again.
- Even if “ACH” is written to the WDTE register during the window close period, an abnormality is detected and an internal reset signal is generated.

Example: If the window open period is 50%

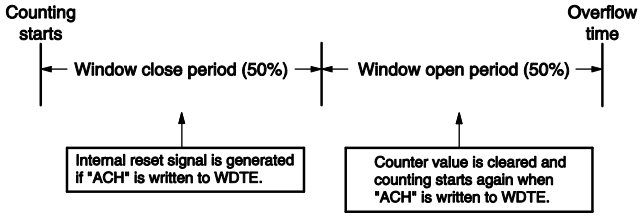

Caution When data is written to the WDTE register for the first time after reset release, the watchdog timer counter is cleared in any timing regardless of the window open time, as long as the register is written before the overflow time, and the watchdog timer counter starts counting again.

The window open period can be set is as follows.

Table 11-4. Setting Window Open Period of Watchdog Timer

WINDOW1	WINDOW0	Window Open Period of Watchdog Timer
0	0	Setting prohibited
0	1	50%
1	0	75%
1	1	100%

Caution When bit 0 (WDSTBYON) of the option byte (000C0H) = 0, the window open period is 100% regardless of the values of the WINDOW1 and WINDOW0 bits.

<R> **If "window open period" is set to 75% (WINDOW1, WINDOW0 = 10B), please perform Counter-clear within the period except for just 50%.**

Remark If the overflow time is set to $2^9/f_{WDT}$, the window close time and open time are as follows.

	Setting of Window Open Period		
	50%	75%	100%
Window close time	0 to 20.08 ms	0 to 10.04 ms	None
Window open time	20.08 to 29.68 ms	10.04 to 29.68 ms	0 to 29.68 ms

<When window open period is 50%>

- Overflow time:
  $2^9/f_{WDT}$ (MAX.) = 2^9/17.25 kHz (MAX.) = 29.68 ms
- Window close time:
  0 to $2^9/f_{WDT}$ (MIN.) × (1 − 0.5) = 0 to 2^9/12.75 kHz × 0.5 = 0 to 20.08 ms
- Window open time:
  $2^9/f_{WDT}$ (MIN.) × (1 − 0.5) to $2^9/f_{WDT}$ (MAX.) = 2^9/12.75 kHz × 0.5 to 2^9/17.25 kHz
  = 20.08 to 29.68 ms

11.4.4 Setting watchdog timer interval interrupt

<R> Setting bit 7 (WDTINT) of an option byte (000C0H) can generate an interval interrupt (INTWDTI) when 75% of the overflow time + 1/2 f_{WDT} is reached.

Table 11-5. Setting of Watchdog Timer Interval Interrupt

WDTINT	Use of Watchdog Timer Interval Interrupt
0	Interval interrupt is not used.
1	Interval interrupt is generated when 75% of overflow time + 1/2 f_{WDT} is reached.

Caution When operating with the X1 oscillation clock after releasing the STOP mode, the CPU starts operating after the oscillation stabilization time has elapsed.
Therefore, if the period between the STOP mode release and the watchdog timer overflow is short, an overflow occurs during the oscillation stabilization time, causing a reset.
Consequently, set the overflow time in consideration of the oscillation stabilization time when operating with the X1 oscillation clock and when the watchdog timer is to be cleared after the STOP mode release by an interval interrupt.

Remark The watchdog timer continues counting even after INTWDTI is generated (until ACH is written to the watchdog timer enable register (WDTE)). If ACH is not written to the WDTE register before the overflow time, an internal reset signal is generated.

CHAPTER 12 A/D CONVERTER

The number of analog input channels of the A/D converter differs, depending on the product.

Pin Count		100 Pins	80 Pins		64 Pins		48 Pins		32 Pins	30 Pins	20 Pins
Analog input channel	RL78/F13 (LIN incorporated)			20 ch ANI0 to ANI15, ANI24 to ANI27	19 ch ANI0 to ANI15, ANI24 to ANI26	12 ch ANI0 to ANI11	15 ch ANI0 to ANI12, ANI24, ANI25	12 ch ANI0 to ANI11	8 ch ANI0 to ANI7	10 ch ANI0 to ANI9	4 ch ANI0 to ANI3
	Code flash	—	—	64 KB or more	96 KB or more	64 KB or less	96 KB or more	64 KB or less	—	—	—
	RL78/F13 (CAN and LIN incorporated)			20 ch ANI0 to ANI15, ANI24 to ANI27	19 ch ANI0 to ANI15, ANI24 to ANI26		15 ch ANI0 to ANI12, ANI24, ANI25		10 ch ANI0 to ANI7, ANI24, ANI25	12 ch ANI0 to ANI9, ANI24, ANI25	
	Code flash	—	—	—	—	—	—	—	—	—	—
	RL78/F14	31 ch ANI0 to ANI23, ANI24 to ANI30	25 ch ANI0 to ANI17, ANI24 to ANI30	20 ch ANI0 to ANI15, ANI24 to ANI27	20 ch ANI0 to ANI16, ANI24 to ANI26	19 ch ANI0 to ANI15, ANI24 to ANI26	18 ch ANI0 to ANI12, ANI24 to ANI28	15 ch ANI0 to ANI12, ANI24, ANI25	10 ch ANI0 to ANI7, ANI24, ANI25	12 ch ANI0 to ANI9, ANI24, ANI25	
	Code flash	—	128 KB or more	96 KB or less	128 KB or more	96 KB or less	128 KB or more	96 KB or less	—	—	—

12.1 Function of A/D Converter

The A/D converter is a 10-bit resolution[Note] converter that converts analog input signals into digital values, and is configured to control analog inputs, including up to 31 channels of A/D converter analog inputs (ANI0 to ANI23 and ANI24 to ANI30).

The A/D converter has the following function.

- **10-bit resolution A/D conversion[Note]**
  10-bit resolution A/D conversion is carried out repeatedly for one analog input channel selected from ANI0 to ANI23 and ANI24 to ANI30. Each time an A/D conversion operation ends, an interrupt request (INTAD) is generated (when in the select mode).

Note 8-bit resolution can also be selected by using the ADTYP bit of A/D converter mode register 2 (ADM2).

Various A/D conversion modes can be specified by using the mode combinations below.

Trigger Mode	Channel Selection Mode	Conversion Operation Mode
• Software trigger Conversion is started by specifying a software trigger. • Hardware trigger no-wait mode Conversion is started by detecting a hardware trigger. • Hardware trigger wait mode The power is turned on by detecting a hardware trigger while the system is off and in the conversion standby state, and conversion is then started automatically after the stabilization wait time passes.	• Select mode A/D conversion is performed on the analog input of one channel. • Scan mode A/D conversion is performed on the analog input of four channels in order.	• One-shot conversion mode A/D conversion is performed on the selected channel once. • Sequential conversion mode A/D conversion is sequentially performed on the selected channels until it is stopped by software.

Figure 12-1. Block Diagram of A/D Converter

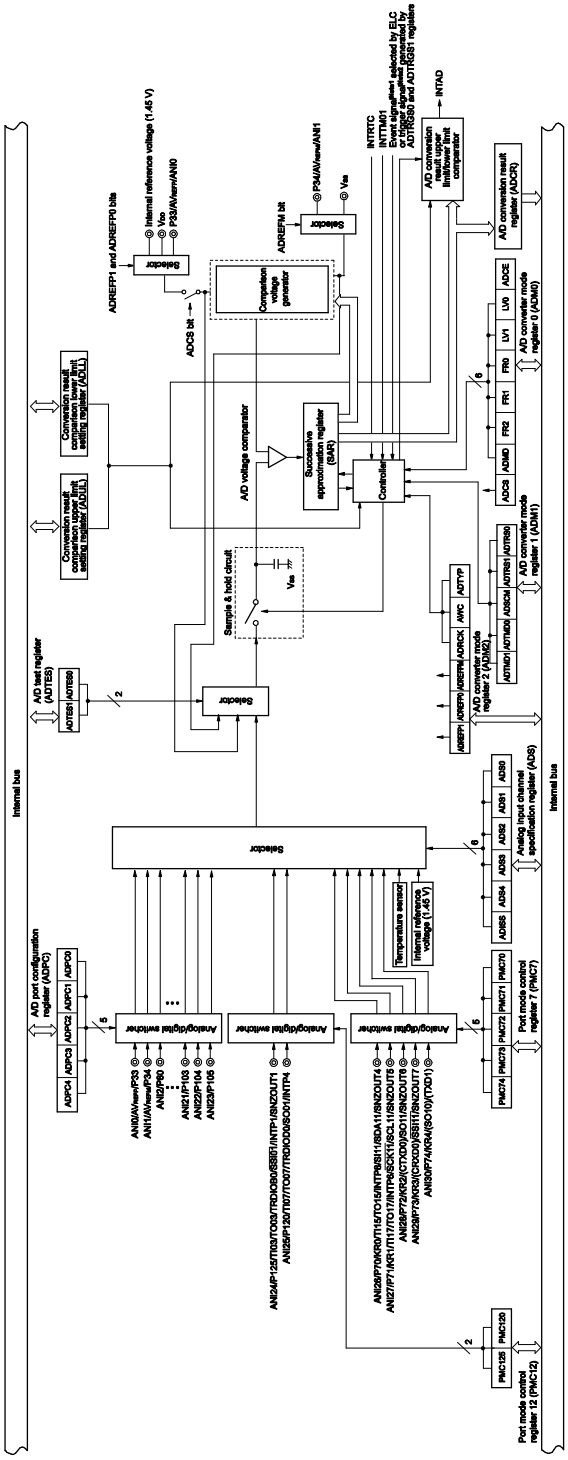

Notes 1. Only available in the RL78/F14.

2. Only available in the RL78/F13.

Remark Analog input pin for figure 12-1 when a 100-pin product of RL78/F14 is used.

12.2 Configuration of A/D Converter

The A/D converter includes the following hardware.

(1) ANI0 to ANI23 (V_{DD}) and ANI24 to ANI30 (EV_{DD}) pins

These are the analog input pins of the twenty channels of the A/D converter. They input analog signals to be converted into digital signals. Pins other than the one selected as the analog input pin can be used as I/O port pins.

Caution If the supply setting other than AV_{REFP}, AV_{REFM} is used as the reference voltage of the A/D converter, the conversion accuracy decreases. In addition, since the EV_{DD} system analog pins have lower accuracy than the V_{DD} system analog pins, the V_{DD} analog pins should be used for highly accurate conversion.

(2) Sample & hold circuit

The sample & hold circuit samples each of the analog input voltages sequentially sent from the input circuit, and sends them to the A/D voltage comparator. This circuit also holds the sampled analog input voltage during A/D conversion.

(3) A/D voltage comparator

This A/D voltage comparator compares the voltage generated from the voltage tap of the comparison voltage generator with the analog input voltage. If the analog input voltage is found to be greater than the reference voltage (1/2 AV_{REF}) as a result of the comparison, the most significant bit (MSB) of the successive approximation register (SAR) is set. If the analog input voltage is less than the reference voltage (1/2 AV_{REF}), the MSB bit of the SAR is reset.
After that, bit 8 of the SAR register is automatically set, and the next comparison is made. The voltage tap of the comparison voltage generator is selected by the value of bit 9, to which the result has been already set.

Bit 9 = 0: (1/4 AV_{REF})
Bit 9 = 1: (3/4 AV_{REF})

The voltage tap of the comparison voltage generator and the analog input voltage are compared and bit 8 of the SAR register is manipulated according to the result of the comparison.

Analog input voltage ≥ Voltage tap of comparison voltage generator: Bit 8 = 1
Analog input voltage ≤ Voltage tap of comparison voltage generator: Bit 8 = 0

Comparison is continued like this to bit 0 of the SAR register.
When performing A/D conversion at a resolution of 8 bits, the comparison continues until bit 2 of the SAR register.

Remark AV_{REF}: The + side reference voltage of the A/D converter. This can be selected from AV_{REFP}, the internal reference voltage (1.45 V), and V_{DD}.

(4) Comparison voltage generator

The comparison voltage generator generates the comparison voltage input from an analog input pin.

(5) Successive approximation register (SAR)

The SAR register is a register that sets voltage tap data whose values from the comparison voltage generator match the voltage values of the analog input pins, 1 bit at a time starting from the most significant bit (MSB).

If data is set in the SAR register all the way to the least significant bit (LSB) (end of A/D conversion), the contents of the SAR register (conversion results) are held in the A/D conversion result register (ADCR). When all the specified A/D conversion operations have ended, an A/D conversion end interrupt request signal (INTAD) is generated.

(6) 10-bit A/D conversion result register (ADCR)

The A/D conversion result is loaded from the successive approximation register to this register each time A/D conversion is completed, and the ADCR register holds the A/D conversion result in its higher 10 bits (the lower 6 bits are fixed to 0).

(7) 8-bit A/D conversion result register (ADCRH)

The A/D conversion result is loaded from the successive approximation register to this register each time A/D conversion is completed, and the ADCRH register stores the higher 8 bits of the A/D conversion result.

(8) Controller

This circuit controls the conversion time of an input analog signal that is to be converted into a digital signal, as well as starting and stopping of the conversion operation. When A/D conversion has been completed, this controller generates INTAD.

(9) AV_{REFP} pin

This pin inputs an external reference voltage (AV_{REFP}).

If using AV_{REFP} as the + side reference voltage of the A/D converter, set the ADREFP1 bit of A/D converter mode register 2 (ADM2) to 0 and the ADREFP0 bit to 1.

The analog signals input to ANI0 to ANI23 and ANI24 to ANI30 are converted to digital signals based on the voltage applied between AV_{REFP} and the – side reference voltage (AV_{REFM}/V_{SS}).

In addition to AV_{REFP}, it is possible to select V_{DD} or the internal reference voltage (1.45 V) as the + side reference voltage of the A/D converter.

(10) AV_{REFM} pin

This pin inputs an external reference voltage (AV_{REFM}). If using AV_{REFM} as the – side reference voltage of the A/D converter, set the ADREFM bit of the ADM2 register to 1.

In addition to AV_{REFM}, it is possible to select V_{SS} as the – side reference voltage of the A/D converter.

12.3 Registers Used in A/D Converter

The A/D converter uses the following registers.

- Peripheral enable register 0 (PER0)
- A/D converter mode register 0 (ADM0)
- A/D converter mode register 1 (ADM1)
- A/D converter mode register 2 (ADM2)
- 10-bit A/D conversion result register (ADCR)
- 8-bit A/D conversion result register (ADCRH)
- Analog input channel specification register (ADS)
- Conversion result comparison upper limit setting register (ADUL)
- Conversion result comparison lower limit setting register (ADLL)
- A/D test register (ADTES)
- A/D port configuration register (ADPC)
- A/D converter trigger select registers 0, 1 (ADTRGS0, ADTRGS1)
- Port mode control registers 7, 9, and 12 (PMC7, PMC9, PMC12)
- Port mode registers 3, 7 to 10, 12 (PM3, PM7 to PM10, PM12)

12.3.1 Peripheral enable register 0 (PER0)

This register is used to enable or disable supplying the clock to the peripheral hardware. Clock supply to a hardware macro that is not used is stopped in order to reduce the power consumption and noise.

When the A/D converter is used, be sure to set bit 5 (ADCEN) of this register to 1.

The PER0 register can be set by a 1-bit or 8-bit memory manipulation instruction.

Reset signal generation clears this register to 00H.

Figure 12-2. Format of Peripheral Enable Register 0 (PER0)

Address: F00F0H After reset: 00H R/W

Symbol	<7>	6	<5>	<4>	<3>	<2>	<1>	<0>
PER0	RTCEN	0	ADCEN	IICA0EN	SAU1EN	SAU0EN	TAU1EN	TAU0EN

ADCEN	Control of A/D converter input clock supply
0	Stops input clock supply. • SFR used by the A/D converter cannot be written. • The A/D converter is in the reset status.
1	Enables input clock supply. • SFR used by the A/D converter can be read/written.

Cautions 1. When setting the A/D converter, be sure to set the ADCEN bit to 1 first. If ADCEN = 0, writing to a control register of the A/D converter is ignored, and, even if the register is read, only the default value is read (except for port mode registers 3, 7 to 10, 12 (PM3, PM7 to PM10, PM12), port mode control registers 7, 9, and 12 (PMC7, PMC9, PMC12), and A/D port configuration register (ADPC)).

2. Be sure to clear the following bits to 0.
Bits 1, 3, 4, and 6 in the RL78/F13 (LIN incorporated) products with 20, 30, 32, 48, or 64 pins and 16 Kbytes to 64 Kbytes of code flash memory
Bits 4 and 6 in 30-pin products of the RL78/F13 (CAN and LIN incorporated) and in 30-pin products of the RL78/F14
Bit 6 in the products other than above

12.3.2 A/D converter mode register 0 (ADM0)

This register sets the conversion time for analog input to be A/D converted, and starts/stops conversion.

The ADM0 register can be set by a 1-bit or 8-bit memory manipulation instruction.

Reset signal generation clears this register to 00H.

Figure 12-3. Format of A/D Converter Mode Register 0 (ADM0)

Address: FFF30H After reset: 00H R/W

Symbol	<7>	6	5	4	3	2	1	<0>
ADM0	ADCS	ADMD	FR2 Note 1	FR1 Note 1	FR0 Note 1	LV1 Note 1	LV0 Note 1	ADCE

ADCS	A/D conversion operation control Note 4
0	Stops conversion operation [When read] Conversion stopped/standby status
1 Note 3	Enables conversion operation [When read Note 2] While in the software trigger mode: Conversion operation status While in the hardware trigger wait mode: Stabilization wait status + conversion operation status

ADMD	Specification of the A/D conversion channel selection mode
0	Select mode
1	Scan mode

ADCE	A/D voltage comparator operation control Note 2
0 Note 3	Stops A/D voltage comparator operation
1	Enables A/D voltage comparator operation

Notes 1. For details of the FR2 to FR0, LV1, LV0 bits, and A/D conversion, see **Table 12-3 A/D Conversion Time Selection**.

2. While in the software trigger mode or hardware trigger no-wait mode, the operation of the A/D voltage comparator is controlled by the ADCS and ADCE bits, and it takes 1 μs from the start of operation for the operation to stabilize. Therefore, when the ADCS bit is set to 1 after 1 μs or more has elapsed from the time ADCE bit is set to 1, the conversion result at that time has priority over the first conversion result. Otherwise, ignore data of the first conversion.

3. The ADCS bit is not set when 1 is written to it and 0 is written to the ADCE bit. The ADCS bit is read as 0.

4. The ADCS bit cannot be used as the flag of conversion operation status in the hardware trigger no-wait mode.

Cautions 1. Change the ADMD, FR2 to FR0, LV1, LV0, and ADCE bits in the conversion stopped/standby status (ADCS = 0).

2. Do not change the ADCS and ADCE bits from 0 to 1 by using an 8-bit manipulation instruction. Be sure to set these bits in the order described in 12.7 A/D Converter Setup Flowchart.

Table 12-1. Settings of ADCS and ADCE Bits

ADCS	ADCE	A/D Conversion Operation
0	0	Stop status (DC power consumption path does not exist)
0	1	Conversion standby mode (only A/D voltage comparator consumes power Note)
1	0	Setting prohibited
1	1	Conversion mode (A/D voltage comparator: enables operation)

Note In hardware trigger wait mode, there is no DC power consumption path even during conversion standby mode.

Table 12-2. Setting and Clearing Conditions for ADCS Bit

A/D Conversion Mode			Set Conditions	Clear Conditions
Software trigger	Select mode	Sequential conversion mode	When 1 is written to ADCS	When 0 is written to ADCS
		One-shot conversion mode		• When 0 is written to ADCS • The bit is automatically cleared to 0 when A/D conversion ends.
	Scan mode	Sequential conversion mode		When 0 is written to ADCS
		One-shot conversion mode		• When 0 is written to ADCS • The bit is automatically cleared to 0 when conversion ends on the specified four channels.
Hardware trigger no-wait mode	Select mode	Sequential conversion mode		When 0 is written to ADCS
		One-shot conversion mode		When 0 is written to ADCS
	Scan mode	Sequential conversion mode		When 0 is written to ADCS
		One-shot conversion mode		When 0 is written to ADCS
Hardware trigger wait mode	Select mode	Sequential conversion mode	When a hardware trigger is input	When 0 is written to ADCS
		One-shot conversion mode		• When 0 is written to ADCS • The bit is automatically cleared to 0 when A/D conversion ends.
	Scan mode	Sequential conversion mode		When 0 is written to ADCS
		One-shot conversion mode		• When 0 is written to ADCS • The bit is automatically cleared to 0 when conversion ends on the specified four channels.

Figure 12-4. Timing Chart When A/D Voltage Comparator Is Used

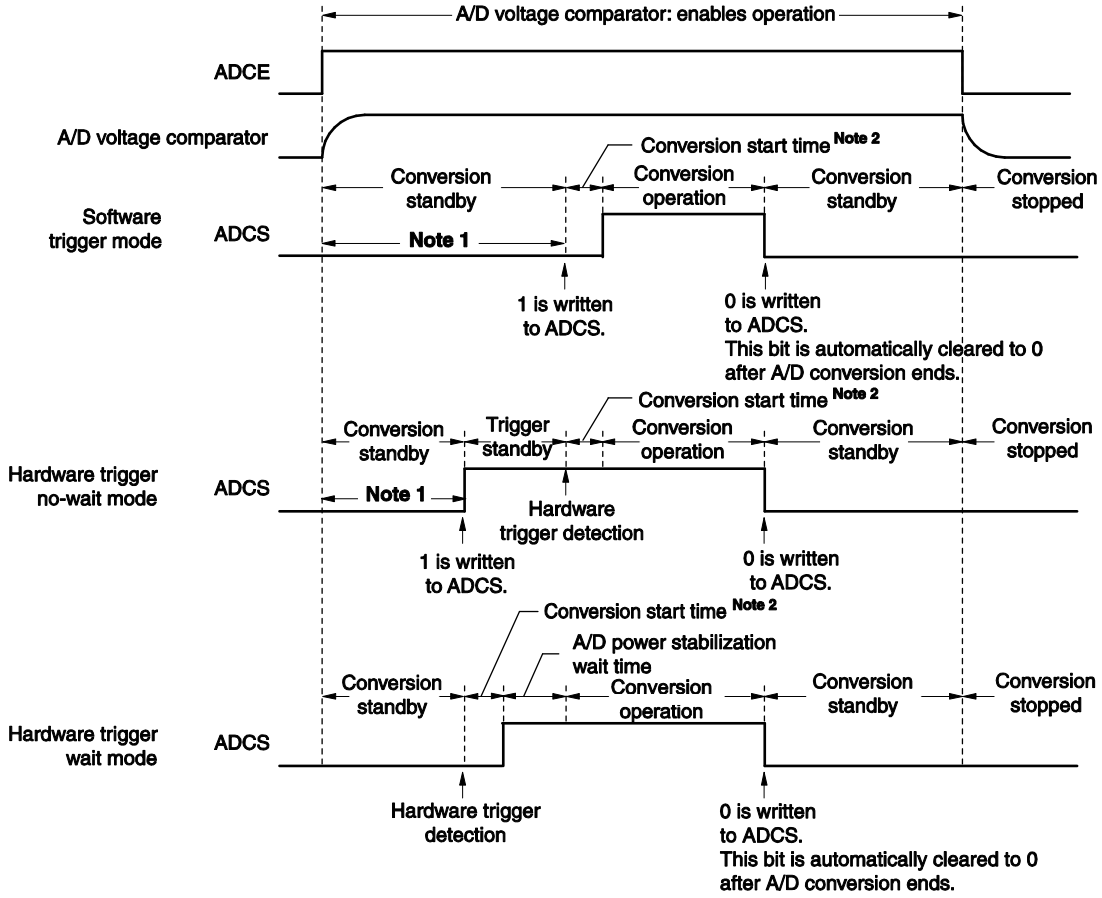

Notes 1. While in the software trigger mode or hardware trigger no-wait mode, the time from the rising of the ADCE bit to the falling of the ADCS bit must be 1 μs or longer to stabilize the internal circuit.

2. The following time is the maximum amount of time necessary to start conversion.

ADM0			Conversion Clock (f_{AD})	Conversion Start Time (Number of f_{CLK} Clocks)	
FR2	FR1	FR0		Software trigger mode/ Hardware trigger no wait mode	Hardware trigger wait mode
0	0	0	$f_{CLK}/64$	63	1
0	0	1	$f_{CLK}/32$	31	
0	1	0	$f_{CLK}/16$	15	
0	1	1	$f_{CLK}/8$	7	
1	0	0	$f_{CLK}/6$	5	
1	0	1	$f_{CLK}/5$	4	
1	1	0	$f_{CLK}/4$	3	
1	1	1	$f_{CLK}/2$	1	

However, for the second and subsequent conversion in sequential conversion mode and for conversion of the channel specified by scan 1, 2, and 3 in scan mode, the conversion start time and stabilization wait time for A/D power supply do not occur after a hardware trigger is detected.

Remark f_{CLK}: CPU/peripheral hardware clock frequency

Cautions 1. If using the hardware trigger wait mode, setting the ADCS bit to 1 is prohibited (but the bit is automatically switched to 1 when the hardware trigger signal is detected). However, it is possible to clear the ADCS bit to 0 to specify the A/D conversion standby status.

2. While in the one-shot conversion mode of the hardware trigger no-wait mode, the ADCS flag is not automatically cleared to 0 when A/D conversion ends. Instead, 1 is retained.

3. Only rewrite the value of the ADCE bit when ADCS = 0 (while in the conversion stopped/conversion standby status).

4. To complete A/D conversion, specify at least the following time as the hardware trigger interval:
Hardware trigger no wait mode: 2 f_{CLK} clocks + A/D conversion time
Hardware trigger wait mode: 2 f_{CLK} clocks + stabilization wait time + A/D conversion time

Table 12-3. A/D Conversion Time Selection (1/4)

(1) 4.0 V ≤ V_{DD} ≤ 5.5 V

When there is stabilization wait time (hardware trigger wait mode)

A/D Converter Mode Register 0 (ADM0)					Mode	Conversion Clock (f_{AD})	Number of A/D Power Supply Stabilization Wait Clocks	Number of conversion clocks	A/D Power Supply Stabilization Wait Time + Conversion Time	Conversion Time Selection					
FR2	FR1	FR0	LV1	LV0						f_{CLK} = 1 MHz	f_{CLK} = 2 MHz	f_{CLK} = 4 MHz	f_{CLK} = 8 MHz	f_{CLK} = 16 MHz	f_{CLK} = 32 MHz
0	0	0	0	0	Normal 1	$f_{CLK}/64$	8 f_{AD}	19 f_{AD} (number of sampling clocks: 7 f_{AD})	$1728/f_{CLK}$	Setting prohibited	Setting prohibited	Setting prohibited	Setting prohibited	Setting prohibited	Setting prohibited
0	0	1				$f_{CLK}/32$			$864/f_{CLK}$						27 μs
0	1	0				$f_{CLK}/16$			$432/f_{CLK}$					27 μs	13.5 μs
0	1	1				$f_{CLK}/8$			$216/f_{CLK}$				27 μs	13.5 μs	6.75 μs
1	0	0				$f_{CLK}/6$			$162/f_{CLK}$				20.25 μs	10.125 μs	5.0625 μs
1	0	1				$f_{CLK}/5$			$135/f_{CLK}$			33.75 μs	16.875 μs	8.4375 μs	4.21875 μs
1	1	0				$f_{CLK}/4$			$108/f_{CLK}$			27 μs	13.5 μs	6.75 μs	3.375 μs
1	1	1				$f_{CLK}/2$			$54/f_{CLK}$		27 μs	13.5 μs	6.75 μs	3.375 μs	Setting prohibited
0	0	0	0	1	Normal 2	$f_{CLK}/64$	8 f_{AD}	17 f_{AD} (number of sampling clocks: 5 f_{AD})	$1600/f_{CLK}$	Setting prohibited	Setting prohibited	Setting prohibited	Setting prohibited	Setting prohibited	Setting prohibited
0	0	1				$f_{CLK}/32$			$800/f_{CLK}$						25 μs
0	1	0				$f_{CLK}/16$			$400/f_{CLK}$					25 μs	12.5 μs
0	1	1				$f_{CLK}/8$			$200/f_{CLK}$				25 μs	12.5 μs	6.25 μs
1	0	0				$f_{CLK}/6$			$150/f_{CLK}$			37.5 μs	18.75 μs	9.375 μs	4.6875 μs
1	0	1				$f_{CLK}/5$			$125/f_{CLK}$			31.25 μs	15.625 μs	7.8125 μs	3.90625 μs
1	1	0				$f_{CLK}/4$			$100/f_{CLK}$			25 μs	12.5 μs	6.25 μs	3.125 μs
1	1	1				$f_{CLK}/2$			$50/f_{CLK}$		25 μs	12.5 μs	6.25 μs	3.125 μs	Setting prohibited
Other than above						Setting prohibited									

Cautions 1. When rewriting the FR2 to FR0, LV1, and LV0 bits to other than the same data, stop A/D conversion once (ADCS = 0) beforehand.

2. The above conversion time does not include clock frequency errors. Select conversion time, taking clock frequency errors into consideration.

3. In the hardware trigger wait mode, the conversion time includes the time spent waiting for stabilization after the hardware trigger is detected.

4. These are the numbers of clock cycles when conversion is with 10-bit resolution. When eight-bit resolution is selected, the values are shorter by two cycles of the conversion clock (f_{AD}).

Remark f_{CLK}: CPU/peripheral hardware clock frequency

Table 12-3. A/D Conversion Time Selection (2/4)

(2) 2.7 V ≤ V_{DD} < 4.0 V
When there is stabilization wait time (hardware trigger wait mode)

A/D Converter Mode Register 0 (ADM0)					Mode	Conversion Clock (f_{AD})	Number of A/D Power Supply Stabilization Wait Clocks	Number of conversion clocks	A/D Power Supply Stabilization Wait Time + Conversion Time	Conversion Time Selection					
FR2	FR1	FR0	LV1	LV0						f_{CLK} = 1 MHz	f_{CLK} = 2 MHz	f_{CLK} = 4 MHz	f_{CLK} = 8 MHz	f_{CLK} = 16 MHz	f_{CLK} = 32 MHz
0	0	0	0	0	Normal 1	f_{CLK}/64	8 f_{AD}	19 f_{AD} (number of sampling clocks: 7 f_{AD})	1728/f_{CLK}	Setting prohibited	Setting prohibited	Setting prohibited	Setting prohibited	Setting prohibited	Setting prohibited
0	0	1				f_{CLK}/32			864/f_{CLK}						27 μs
0	1	0				f_{CLK}/16			432/f_{CLK}					27 μs	13.5 μs
0	1	1				f_{CLK}/8			216/f_{CLK}				27 μs	13.5 μs	6.75 μs
1	0	0				f_{CLK}/6			162/f_{CLK}				20.25 μs	10.125 μs	5.0625 μs
1	0	1				f_{CLK}/5			135/f_{CLK}			33.75 μs	16.875 μs	8.4375 μs	4.2188 μs
1	1	0				f_{CLK}/4			108/f_{CLK}			27 μs	13.5 μs	6.75 μs	Setting prohibited
1	1	1				f_{CLK}/2			54/f_{CLK}		27 μs	13.5 μs	6.75 μs	Setting prohibited	
0	0	0	0	1	Normal 2	f_{CLK}/64	8 f_{AD}	17 f_{AD} (number of sampling clocks: 5 f_{AD})	1600/f_{CLK}	Setting prohibited	Setting prohibited	Setting prohibited	Setting prohibited	Setting prohibited	Setting prohibited
0	0	1				f_{CLK}/32			800/f_{CLK}						25 μs
0	1	0				f_{CLK}/16			400/f_{CLK}					25 μs	12.5 μs
0	1	1				f_{CLK}/8			200/f_{CLK}				25 μs	12.5 μs	6.25 μs
1	0	0				f_{CLK}/6			150/f_{CLK}			37.5 μs	18.75 μs	9.375 μs	4.6875 μs
1	0	1				f_{CLK}/5			125/f_{CLK}			31.25 μs	15.625 μs	7.8125 μs	3.9063 μs
1	1	0				f_{CLK}/4			100/f_{CLK}			25 μs	12.5 μs	6.25 μs	Setting prohibited
1	1	1				f_{CLK}/2			50/f_{CLK}		25 μs	12.5 μs	6.25 μs	Setting prohibited	
Other than above						Setting prohibited									

Cautions 1. When rewriting the FR2 to FR0, LV1, and LV0 bits to other than the same data, stop A/D conversion once (ADCS = 0) beforehand.

2. The above conversion time does not include clock frequency errors. Select conversion time, taking clock frequency errors into consideration.

3. While in the hardware trigger wait mode, the conversion time includes the time spent waiting for stabilization after the hardware trigger is detected.

4. These are the numbers of clock cycles when conversion is with 10-bit resolution. When eight-bit resolution is selected, the values are shorter by two cycles of the conversion clock (f_{AD}).

Remark f_{CLK}: CPU/peripheral hardware clock frequency

Table 12-3. A/D Conversion Time Selection (3/4)

(3) 4.0 V ≤ V_{DD} ≤ 5.5 V

When there is no stabilization wait time (software trigger mode/hardware trigger no-wait mode)

A/D Converter Mode Register 0 (ADM0)					Mode	Conversion Clock (f_{AD})	Number of conversion clocks	Conversion Time	Conversion Time Selection					
FR2	FR1	FR0	LV1	LV0					f_{CLK} = 1 MHz	f_{CLK} = 2 MHz	f_{CLK} = 4 MHz	f_{CLK} = 8 MHz	f_{CLK} = 16 MHz	f_{CLK} = 32 MHz
0	0	0	0	0	Normal 1	f_{CLK}/64	19 f_{AD} (number of sampling clocks: 7 f_{AD})	1216/f_{CLK}	Setting prohibited	Setting prohibited	Setting prohibited	Setting prohibited	Setting prohibited	38 μs
0	0	1				f_{CLK}/32		608/f_{CLK}					38 μs	19 μs
0	1	0				f_{CLK}/16		304/f_{CLK}				38 μs	19 μs	9.5 μs
0	1	1				f_{CLK}/8		152/f_{CLK}			38 μs	19 μs	9.5 μs	4.75 μs
1	0	0				f_{CLK}/6		114/f_{CLK}			28.5 μs	14.25 μs	7.125 μs	3.5625 μs
1	0	1				f_{CLK}/5		95/f_{CLK}			23.75 μs	11.875 μs	5.938 μs	2.9688 μs
1	1	0				f_{CLK}/4		76/f_{CLK}		38 μs	19 μs	9.5 μs	4.75 μs	2.375 μs
1	1	1				f_{CLK}/2		38/f_{CLK}	38 μs	19 μs	9.5 μs	4.75 μs	2.375 μs	Setting prohibited
0	0	0	0	1	Normal 2	f_{CLK}/64	17 f_{AD} (number of sampling clocks: 5 f_{AD})	1088/f_{CLK}	Setting prohibited	Setting prohibited	Setting prohibited	Setting prohibited	Setting prohibited	34 μs
0	0	1				f_{CLK}/32		544/f_{CLK}					34 μs	17 μs
0	1	0				f_{CLK}/16		272/f_{CLK}				34 μs	17 μs	8.5 μs
0	1	1				f_{CLK}/8		136/f_{CLK}			34 μs	17 μs	8.5 μs	4.25 μs
1	0	0				f_{CLK}/6		102/f_{CLK}			25.5 μs	12.75 μs	6.375 μs	3.1875 μs
1	0	1				f_{CLK}/5		85/f_{CLK}			21.25 μs	10.625 μs	5.3125 μs	2.6563 μs
1	1	0				f_{CLK}/4		68/f_{CLK}		34 μs	17 μs	8.5 μs	4.25 μs	2.125 μs Note
1	1	1				f_{CLK}/2		34/f_{CLK}	34 μs	17 μs	8.5 μs	4.25 μs	2.125 μs Note	Setting prohibited
Other than above							Setting prohibited							

Note This value is prohibited when using the temperature sensor.

Cautions 1. When rewriting the FR2 to FR0, LV1, and LV0 bits to other than the same data, stop A/D conversion once (ADCS = 0) beforehand.

2. The above conversion time does not include clock frequency errors. Select conversion time, taking clock frequency errors into consideration.

3. These are the numbers of clock cycles when conversion is with 10-bit resolution. When eight-bit resolution is selected, the values are shorter by two cycles of the conversion clock (f_{AD}).

Remark f_{CLK}: CPU/peripheral hardware clock frequency

Table 12-3. A/D Conversion Time Selection (4/4)

(4) 2.7 V ≤ V_{DD} < 4.0 V

When there is no stabilization wait time (software trigger mode/hardware trigger no-wait mode)

A/D Converter Mode Register 0 (ADM0)					Mode	Conversion Clock (f_{AD})	Number of conversion clocks	Conversion Time	Conversion Time Selection					
FR2	FR1	FR0	LV1	LV0					f_{CLK} = 1 MHz	f_{CLK} = 2 MHz	f_{CLK} = 4 MHz	f_{CLK} = 8 MHz	f_{CLK} = 16 MHz	f_{CLK} = 32 MHz
0	0	0	0	0	Normal 1	$f_{CLK}/64$	19 f_{AD} (number of sampling clocks: 7 f_{AD})	$1216/f_{CLK}$	Setting prohibited	Setting prohibited	Setting prohibited	Setting prohibited	Setting prohibited	38 μs
0	0	1				$f_{CLK}/32$		$608/f_{CLK}$					38 μs	19 μs
0	1	0				$f_{CLK}/16$		$304/f_{CLK}$				38 μs	19 μs	9.5 μs
0	1	1				$f_{CLK}/8$		$152/f_{CLK}$			38 μs	19 μs	9.5 μs	4.75 μs
1	0	0				$f_{CLK}/6$		$114/f_{CLK}$			28.5 μs	14.25 μs	7.125 μs	3.5625 μs
1	0	1				$f_{CLK}/5$		$95/f_{CLK}$			23.75 μs	11.875 μs	5.938 μs	Setting prohibited
1	1	0				$f_{CLK}/4$		$76/f_{CLK}$		38 μs	19 μs	9.5 μs	4.75 μs	
1	1	1				$f_{CLK}/2$		$38/f_{CLK}$	38 μs	19 μs	9.5 μs	4.75 μs	Setting prohibited	
0	0	0	0	1	Normal 2	$f_{CLK}/64$	17 f_{AD} (number of sampling clocks: 5 f_{AD})	$1088/f_{CLK}$	Setting prohibited	Setting prohibited	Setting prohibited	Setting prohibited	Setting prohibited	34 μs
0	0	1				$f_{CLK}/32$		$544/f_{CLK}$					34 μs	17 μs
0	1	0				$f_{CLK}/16$		$272/f_{CLK}$				34 μs	17 μs	8.5 μs
0	1	1				$f_{CLK}/8$		$136/f_{CLK}$			34 μs	17 μs	8.5 μs	4.25 μs
1	0	0				$f_{CLK}/6$		$102/f_{CLK}$			25.5 μs	12.75 μs	6.375 μs	3.1875 μs Note
1	0	1				$f_{CLK}/5$		$85/f_{CLK}$			21.25 μs	10.625 μs	5.3125 μs	Setting prohibited
1	1	0				$f_{CLK}/4$		$68/f_{CLK}$		34 μs	17 μs	8.5 μs	4.25 μs	
1	1	1				$f_{CLK}/2$		$34/f_{CLK}$	34 μs	17 μs	8.5 μs	4.25 μs	Setting prohibited	
Other than above						Setting prohibited								

Note This value is prohibited when using the temperature sensor.

Cautions 1. When rewriting the FR2 to FR0, LV1, and LV0 bits to other than the same data, stop A/D conversion once (ADCS = 0) beforehand.

2. The above conversion time does not include clock frequency errors. Select conversion time, taking clock frequency errors into consideration.

3. These are the numbers of clock cycles when conversion is with 10-bit resolution. When eight-bit resolution is selected, the values are shorter by two cycles of the conversion clock (f_{AD}).

Remark f_{CLK}: CPU/peripheral hardware clock frequency

<R> **Figure 12-5. A/D Converter Sampling and A/D Conversion Timing (Example for Software Trigger Mode)**

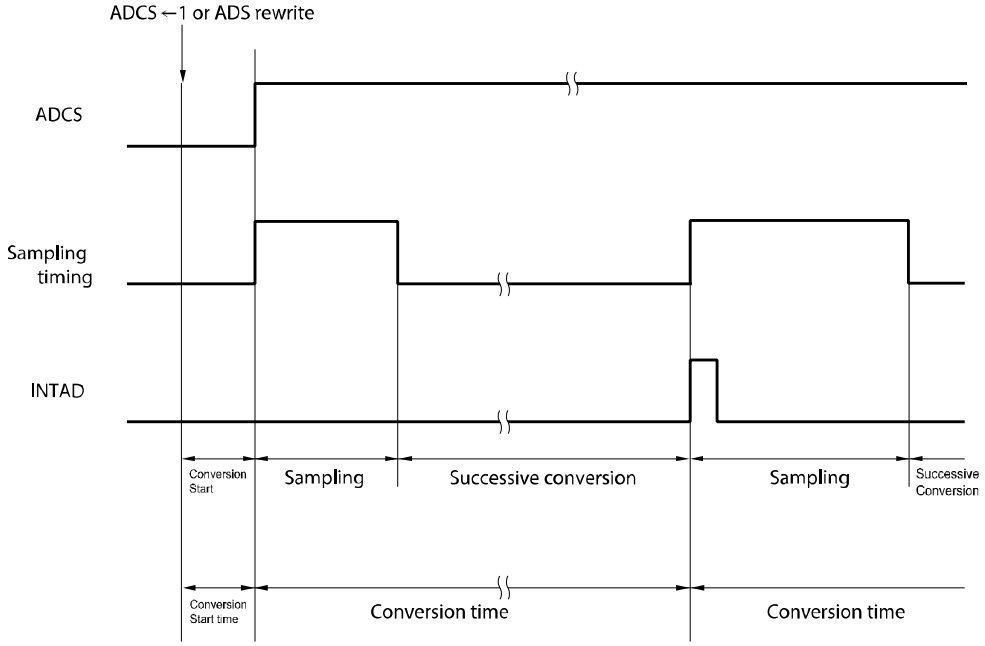

12.3.3 A/D converter mode register 1 (ADM1)

This register is used to specify the A/D conversion trigger, conversion mode, and hardware trigger signal.

The ADM1 register can be set by a 1-bit or 8-bit memory manipulation instruction.

Reset signal generation clears this register to 00H.

Figure 12-6. Format of A/D Converter Mode Register 1 (ADM1)

Address: FFF32H After reset: 00H R/W

Symbol	7	6	5	4	3	2	1	0
ADM1	ADTMD1	ADTMD0	ADSCM	0	0	0	ADTRS1	ADTRS0

ADTMD1	ADTMD0	Selection of the A/D conversion trigger mode
0	×	Software trigger mode
1	0	Hardware trigger no-wait mode
1	1	Hardware trigger wait mode

ADSCM	Specification of the A/D conversion mode
0	Sequential conversion mode
1	One-shot conversion mode

ADTRS1	ADTRS0	Selection of the hardware trigger signal
0	0	End of TAU0 channel 1 count or capture interrupt signal (INTTM01)
0	1	Trigger signal generated by the ADTRGS0 and ADTRGS1 registers Note 1 Event signal selected by ELC Note 2
1	0	Pretimed signal/alarm interrupt signal (INTRTC)
1	1	Setting prohibited

Notes 1. Only in the RL78/F13.

2. Only in the RL78/F14.

Cautions 1. Only rewrite the value of the ADM1 register while conversion operation is stopped (which is indicated by the ADCS bit of A/D converter mode register 0 (ADM0) being 0).

2. To complete A/D conversion, specify at least the following time as the hardware trigger interval:

Hardware trigger no wait mode: 2 f_{CLK} clocks + A/D conversion time

Hardware trigger wait mode: 2 f_{CLK} clocks + stabilization wait time + A/D conversion time

3. In modes other than SNOOZE mode, input of the next INTRTC will not be recognized as a valid hardware trigger for up to four f_{CLK} cycles after the first INTRTC is input.

Remarks 1. ×: don't care

2. f_{CLK}: CPU/peripheral hardware clock frequency

12.3.4 A/D converter mode register 2 (ADM2)

This register is used to select the A/D converter reference voltage, check the upper limit and lower limit A/D conversion result values, select the resolution, and specify whether to use the SNOOZE mode.

The ADM2 register can be set by a 1-bit or 8-bit memory manipulation instruction.

Reset signal generation clears this register to 00H.

Figure 12-7. Format of A/D Converter Mode Register 2 (ADM2) (1/2)

Address: F0010H After reset: 00H R/W

Symbol	7	6	5	4	<3>	<2>	1	<0>
ADM2	ADREFP1	ADREFP0	ADREFM	0	ADRCK	AWC	0	ADTYP

ADREFP1	ADREFP0	Selection of the + side reference voltage source of the A/D converter
0	0	Supplied from V_{DD}
0	1	Supplied from P33/AV_{REFP}/ANI0
1	0	Supplied from the internal reference voltage (1.45 V)
1	1	Setting prohibited

- When ADREFP1 or ADREFP0 bit is rewritten, this must be configured in accordance with the following procedures.
  (1) Set ADCE = 0
  (2) Change the values of ADREFP1 and ADREFP0
  (3) Stabilization wait time (A)
  (4) Set ADCE = 1
  (5) Stabilization wait time (B)
  When ADREFP1 and ADREFP0 are set to 1 and 0, the setting is changed to A = 5 μs, B = 1 μs.
  When ADREFP1 and ADREFP0 are set to 0 and 0 or 0 and 1, A needs no wait and B = 1 μs.
  Start A/D conversion after the wait time (5) specified above).
- When ADREFP1 and ADREFP0 are set to 1 and 0, respectively, A/D conversion cannot be performed on the temperature sensor output and internal reference voltage output.
  Be sure to perform A/D conversion while ADISS = 0.

ADREFM	Selection of the – side reference voltage source of the A/D converter
0	Supplied from V_{SS}
1	Supplied from P34/AV_{REFM}/ANI1

ADRCK	Checking the upper limit and lower limit conversion result values
0	The interrupt signal (INTAD) is output when the ADLL register ≤ the ADCR register ≤ the ADUL register (<1>).
1	The interrupt signal (INTAD) is output when the ADCR register < the ADLL register (<2>) or the ADUL register < the ADCR register (<3>).
Figure 12-8 shows the generation range of the interrupt signal (INTAD) for <1> to <3>.	

Cautions 1. Only rewrite the value of the ADM2 register while conversion operation is stopped (which is indicated by the ADCS bit of A/D converter mode register 0 (ADM0) being 0).

2. When entering STOP mode or HALT mode while the CPU is operating on the subsystem/low-speed on-chip oscillator select clock, do not set ADREFP1 to 1. When the internal reference voltage is selected (ADREFP1, ADREFP0 = 1, 0), the current value defined in the supply current characteristics in CHAPTER 34 to CHAPTER 36 ELECTRICAL SPECIFICATIONS must be added.

3. When using AV_{REFP} and AV_{REFM}, specify ANI0 and ANI1 as the analog input channels and specify input mode by using the port mode register.

Figure 12-7. Format of A/D Converter Mode Register 2 (ADM2) (2/2)

Address: F0010H After reset: 00H R/W

Symbol	7	6	5	4	<3>	<2>	1	<0>
ADM2	ADREFP1	ADREFP0	ADREFM	0	ADRCK	AWC	0	ADTYP

AWC	Specification of the SNOOZE mode
0	Do not use the SNOOZE mode function.
1	Use the SNOOZE mode function.

When there is a hardware trigger signal in the STOP mode, the STOP mode is exited, and A/D conversion is performed without operating the CPU (the SNOOZE mode).

- The SNOOZE mode function can only be specified when the high-speed on-chip oscillator clock is selected for the CPU/peripheral hardware clock (f_{CLK}). If any other clock is selected, specifying this mode is prohibited.
- Using the SNOOZE mode function in the software trigger mode or hardware trigger no-wait mode is prohibited.
- Using the SNOOZE mode function in the sequential conversion mode is prohibited.
- When using the SNOOZE mode function, specify a hardware trigger interval of at least “shift time to SNOOZE mode [Note] + A/D power supply stabilization wait time + A/D conversion time + 2 f_{CLK} clocks”.

□ Even when using SNOOZE mode, be sure to set the AWC bit to 0 in normal operation mode and change it to 1 just before shifting to STOP mode.
Also, be sure to change the AWC bit to 0 after returning from STOP mode to normal operation mode.
If the AWC bit is left set to 1, A/D conversion will not start normally in spite of the subsequent SNOOZE or normal operation mode.

ADTYP	Selection of the A/D conversion resolution
0	10-bit resolution
1	8-bit resolution

Note Refer to “From STOP to SNOOZE” in **23.3.3 SNOOZE mode**.

Caution Only rewrite the value of the ADM2 register while conversion operation is stopped (which is indicated by the ADCS bit of A/D converter mode register 0 (ADM0) being 0).

Figure 12-8. ADRCK Bit Interrupt Signal Generation Range

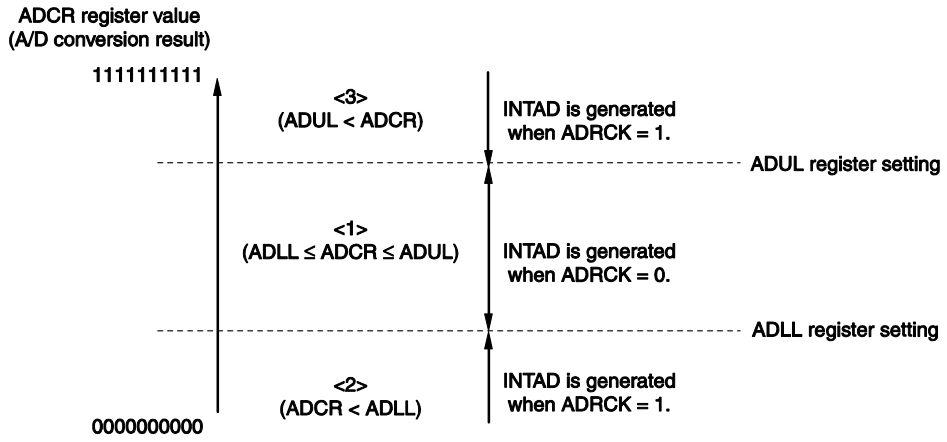

Remark If INTAD does not occur, the A/D conversion result is not stored in the ADCR or ADCRH register.

12.3.5 10-bit A/D conversion result register (ADCR)

This register is a 16-bit register that stores the A/D conversion result in the select mode. The lower 6 bits are fixed to 0. Each time A/D conversion ends, the conversion result is loaded from the successive approximation register (SAR). The higher 8 bits of the conversion result are stored in FFF1FH and the lower 2 bits are stored in the higher 2 bits of FFF1EH [Note].

The ADCR register can be read by a 16-bit memory manipulation instruction.

Reset signal generation clears this register to 0000H.

Note If the A/D conversion result is outside the range specified by using the A/D conversion result comparison function (the value specified by the ADRCK bit of the ADM2 register and ADUL/ADLL registers; see **Figure 12-8**), the result is not stored.

Figure 12-9. Format of 10-bit A/D Conversion Result Register (ADCR)

Address: FFF1FH, FFF1EH After reset: 0000H R

Symbol	FFF1FH								FFF1EH							
ADCR											0	0	0	0	0	0

Cautions 1. When writing to the A/D converter mode register 0 (ADM0), analog input channel specification register (ADS), and A/D port configuration register (ADPC), the contents of the ADCR register may become undefined. Read the conversion result following conversion completion before writing to the ADM0, ADS, and ADPC registers. Using timing other than the above may cause an incorrect conversion result to be read.

2. When 8-bit resolution A/D conversion is selected (when the ADTYP bit of A/D converter mode register 2 (ADM2) is 1) and the ADCR register is read, 0 is read from the lower two bits (ADCR1 and ADCR0).

3. When the ADCR register is accessed in 16-bit units, the higher 10 bits of the conversion result are read in order starting at bit 15.

12.3.6 8-bit A/D conversion result register (ADCRH)

This register is an 8-bit register that stores the A/D conversion result. The higher 8 bits of 10-bit resolution are stored Note.

The ADCRH register can be read by an 8-bit memory manipulation instruction.

Reset signal generation clears this register to 00H.

Note If the A/D conversion result is outside the range specified by using the A/D conversion result comparison function (the value specified by the ADRCK bit of the ADM2 register and ADUL/ADLL registers; see **Figure 12-8**), the result is not stored.

Figure 12-10. Format of 8-bit A/D Conversion Result Register (ADCRH)

Address: FFF1FH After reset: 00H R

Symbol	7	6	5	4	3	2	1	0
ADCRH								

Caution When writing to the A/D converter mode register 0 (ADM0), analog input channel specification register (ADS), and A/D port configuration register (ADPC), the contents of the ADCRH register may become undefined. Read the conversion result following conversion completion before writing to the ADM0, ADS, and ADPC registers. Using timing other than the above may cause an incorrect conversion result to be read.

12.3.7 Analog input channel specification register (ADS)

This register specifies the input channel of the analog voltage to be A/D converted.

The ADS register can be set by a 1-bit or 8-bit memory manipulation instruction.

Reset signal generation clears this register to 00H.

Figure 12-11. Format of Analog Input Channel Specification Register (ADS) (1/2)

Address: FFF31H After reset: 00H R/W

Symbol	7	6	5	4	3	2	1	0
ADS	ADISS	0	0	ADS4	ADS3	ADS2	ADS1	ADS0

○ Select mode (ADMD = 0)

ADISS	ADS4	ADS3	ADS2	ADS1	ADS0	Analog input channel	Input source
0	0	0	0	0	0	ANI0	P33/AV_{REFP}/ANI0
0	0	0	0	0	1	ANI1	P34/AV_{REFM}/ANI1
0	0	0	0	1	0	ANI2	P80/ANI2/ANO0
0	0	0	0	1	1	ANI3	P81/ANI3/IVCMP00
0	0	0	1	0	0	ANI4	P82/ANI4/IVCMP01
0	0	0	1	0	1	ANI5	P83/ANI5/IVCMP02
0	0	0	1	1	0	ANI6	P84/ANI6/IVCMP03
0	0	0	1	1	1	ANI7	P85/ANI7/IVREF0
0	0	1	0	0	0	ANI8	P86/ANI8
0	0	1	0	0	1	ANI9	P87/ANI9
0	0	1	0	1	0	ANI10	P90/ANI10
0	0	1	0	1	1	ANI11	P91/ANI11
0	0	1	1	0	0	ANI12	P92/ANI12
0	0	1	1	0	1	ANI13	P93/ANI13
0	0	1	1	1	0	ANI14	P94/ANI14
0	0	1	1	1	1	ANI15	P95/ANI15
0	1	0	0	0	0	ANI16	P96/ANI16 Note 1
0	1	0	0	0	1	ANI17	P97/ANI17 Note 2
0	1	0	0	1	0	ANI18	P100/ANI18
0	1	0	0	1	1	ANI19	P101/ANI19
0	1	0	1	0	0	ANI20	P102/ANI20
0	1	0	1	0	1	ANI21	P103/ANI21
0	1	0	1	1	0	ANI22	P104/ANI22
0	1	0	1	1	1	ANI23	P105/ANI23
0	1	1	0	0	0	ANI24	P125/ANI24
0	1	1	0	0	1	ANI25	P120/ANI25
0	1	1	0	1	0	ANI26	P96/ANI26 Note 3, P70/ANI26 Note 4
0	1	1	0	1	1	ANI27	P97/ANI27 Note 5, P71/ANI27 Note 6
0	1	1	1	0	0	ANI28	P72/ANI28
0	1	1	1	0	1	ANI29	P73/ANI29
0	1	1	1	1	0	ANI30	P74/ANI30
1	0	0	0	0	0	—	Temperature sensor output
1	0	0	0	0	1	—	Internal reference voltage output (1.45 V)
Other than above						Setting prohibited	

(**Notes** are listed on the next page.)

Notes 1. RL78/F14 products with 64 or 80 pins and 128 Kbytes to 256 Kbytes of code flash memory, or RL78/F14 products with 100 pins and 64 Kbytes to 256 Kbytes of code flash memory.

2. RL78/F14 products with 80 pins and 128 Kbytes to 256 Kbytes of code flash memory, or RL78/F14 products with 100 pins and 64 Kbytes to 256 Kbytes of code flash memory.

3. RL78/F14 products with 64 or 80 pins and 64 Kbytes to 96 Kbytes of code flash memory, RL78/F13 (CAN and LIN incorporated) products with 80 pins and 64 Kbytes to 128 Kbytes of code flash memory,
or RL78/F13 (CAN and LIN incorporated) products with 64 pins and 32 Kbytes to 128 Kbytes of code flash memory,
or RL78/F13 (LIN incorporated) products with 80 pins and 64 Kbytes to 128 Kbytes of code flash memory,
or RL78/F13 (LIN incorporated) products with 64 pins and 96 Kbytes to 128 Kbytes of code flash memory.

4. RL78/F14 products with 48, 64, or 80 pins and 128 Kbytes to 256 Kbytes of code flash memory, or RL78/F14 products with 100 pins and 64 Kbytes to 256 Kbytes of code flash memory.

5. RL78/F14 products with 80 pins and 64 Kbytes to 96 Kbytes of code flash memory, RL78/F13 (CAN and LIN incorporated) or RL78/F13 (LIN incorporated) products with 80 pins and 64 Kbytes to 128 Kbytes of code flash memory.

6. RL78/F14 products with 48 or 80 pins and 128 Kbytes to 256 Kbytes of code flash memory, or RL78/F14 products with 100 pins and 64 Kbytes to 256 Kbytes of code flash memory

Figure 12-11. Format of Analog Input Channel Specification Register (ADS) (2/2)

Address: FFF31H After reset: 00H R/W

Symbol	7	6	5	4	3	2	1	0
ADS	ADISS	0	0	ADS4	ADS3	ADS2	ADS1	ADS0

○ Scan mode (ADMD = 1)

ADISS	ADS4	ADS3	ADS2	ADS1	ADS0	Analog input channel			
						Scan 0	Scan 1	Scan 2	Scan 3
0	0	0	0	0	0	ANI0	ANI1	ANI2	ANI3
0	0	0	0	0	1	ANI1	ANI2	ANI3	ANI4
0	0	0	0	1	0	ANI2	ANI3	ANI4	ANI5
0	0	0	0	1	1	ANI3	ANI4	ANI5	ANI6
0	0	0	1	0	0	ANI4	ANI5	ANI6	ANI7
0	0	0	1	0	1	ANI5	ANI6	ANI7	ANI8
0	0	0	1	1	0	ANI6	ANI7	ANI8	ANI9
0	0	0	1	1	1	ANI7	ANI8	ANI9	ANI10
0	0	1	0	0	0	ANI8	ANI9	ANI10	ANI11
0	0	1	0	0	1	ANI9	ANI10	ANI11	ANI12
0	0	1	0	1	0	ANI10	ANI11	ANI12	ANI13
0	0	1	0	1	1	ANI11	ANI12	ANI13	ANI14
0	0	1	1	0	0	ANI12	ANI13	ANI14	ANI15
0	1	0	0	0	0	ANI16	ANI17	ANI18	ANI19
0	1	0	0	0	1	ANI17	ANI18	ANI19	ANI20
0	1	0	0	1	0	ANI18	ANI19	ANI20	ANI21
0	1	0	0	1	1	ANI19	ANI20	ANI21	ANI22
0	1	0	1	0	0	ANI20	ANI21	ANI22	ANI23
Other than the above						Setting prohibited			

Cautions 1. Be sure to clear bits 5 and 6 to 0.

2. Set the port that is set to analog input by the ADPC and PMCxx registers to the input mode by using port mode registers 3, 7 to 10, or 12 (PM3, PM7 to PM10, PM12).

3. Do not set the pin that is set by the A/D port configuration register (ADPC) as digital I/O by the ADS register.

4. Do not set the pin that is set by port mode control registers 7, 9, or 12 (PMC7, PMC9, PMC12) as digital I/O by the ADS register.

5. Only rewrite the value of the ADISS bit while A/D voltage comparator operation is stopped (which is indicated by the ADCE bit of A/D converter mode register 0 (ADM0) being 0).

6. If using AV_{REFP} as the + side reference voltage source of the A/D converter, do not select ANI0 as an A/D conversion channel.

7. If using AV_{REFM} as the – side reference voltage source of the A/D converter, do not select ANI1 as an A/D conversion channel.

8. If ADISS is set to 1, the internal reference voltage (1.45 V) cannot be used for the + side reference voltage source. In addition, the result of the first conversion after ADISS has been set to 1 is not usable.

9. When entering STOP mode or HALT mode while the CPU is operating on the subsystem/low-speed on-chip oscillator select clock, do not set ADISS to 1. When ADISS is set to 1, the current value defined in the supply current characteristics in CHAPTER 34 to CHAPTER 36 ELECTRICAL SPECIFICATIONS must be added.

10. Ignore the conversion result if the corresponding ANI pin does not exist in the product used.

12.3.8 Conversion result comparison upper limit setting register (ADUL)

This register is used to specify the setting for checking the upper limit of the A/D conversion results.

The A/D conversion results and ADUL register value are compared, and interrupt signal (INTAD) generation is controlled in the range specified for the ADRCK bit of A/D converter mode register 2 (ADM2) (shown in **Figure 12-8**).

The ADUL register can be set by an 8-bit memory manipulation instruction.

Reset signal generation sets this register to FFH.

Figure 12-12. Format of Conversion Result Comparison Upper Limit Setting Register (ADUL)

Address: F0011H After reset: FFH R/W

Symbol	7	6	5	4	3	2	1	0
ADUL	ADUL7	ADUL6	ADUL5	ADUL4	ADUL3	ADUL2	ADUL1	ADUL0

Cautions 1. When A/D conversion with 10-bit resolution is selected, the higher eight bits of the 10-bit A/D conversion result register (ADCR) are compared with the value in the ADUL register.

2. Writing new values to the ADUL and ADLL registers is prohibited while conversion is enabled.
<R> **Write new values to these registers while conversion is stopped (ADCE = 0, ADCS = 0).**

3. The setting of the ADUL registers must be greater than that of the ADLL register.

12.3.9 Conversion result comparison lower limit setting register (ADLL)

This register is used to specify the setting for checking the lower limit of the A/D conversion results.

The A/D conversion results and ADLL register value are compared, and interrupt signal (INTAD) generation is controlled in the range specified for the ADRCK bit of A/D converter mode register 2 (ADM2) (shown in **Figure 12-8**).

The ADLL register can be set by an 8-bit memory manipulation instruction.

Reset signal generation clears this register to 00H.

Figure 12-13. Format of Conversion Result Comparison Lower Limit Setting Register (ADLL)

Address: F0012H After reset: 00H R/W

Symbol	7	6	5	4	3	2	1	0
ADLL	ADLL7	ADLL6	ADLL5	ADLL4	ADLL3	ADLL2	ADLL1	ADLL0

Cautions 1. When A/D conversion with 10-bit resolution is selected, the higher eight bits of the 10-bit A/D conversion result register (ADCR) are compared with the value in the ADLL register.

2. Writing new values to the ADUL and ADLL registers is prohibited while conversion is enabled.
<R> **Write new values to these registers while conversion is stopped (ADCE = 0, ADCS = 0).**

3. The setting of the ADUL registers must be greater than that of the ADLL register.

12.3.10 A/D test register (ADTES)

<R> This register is used to select the + side reference voltage (AV_{REFP}), - side reference voltage (AV_{REFM}) of the A/D converter, the analog input channel (ANIxx), the temperature sensor output voltage, or the internal reference voltage (1.45 V) as the A/D conversion target for the A/D test function.

When using this resister for A/D test function, this register is set as follows.

- For zero-scale measurement, select the - side reference voltage as the target for conversion.
- For full-scale measurement, select the + side reference voltage as the target for conversion.

The ADTES register can be set by an 8-bit memory manipulation instruction.

Reset signal generation clears this register to 00H.

Figure 12-14. Format of A/D Test Register (ADTES)

Address: F0013H After reset: 00H R/W

Symbol	7	6	5	4	3	2	1	0
ADTES	0	0	0	0	0	0	ADTES1	ADTES0

ADTES1	ADTES0	A/D conversion target
0	0	ANIxx/temperature sensor output voltage/internal reference voltage (1.45 V) (This is specified using the analog input channel specification register (ADS).)
1	0	The - side reference voltage (selected by the ADREFM bit of the ADM2 register)
1	1	The + side reference voltage (selected by the ADREFP1 or ADREFP0 bit of the ADM2 register)
Other than the above		Setting prohibited

Caution For details of the A/D test function, see CHAPTER 27 SAFETY FUNCTIONS.

12.3.11 A/D port configuration register (ADPC)

This register switches the ANI0/P33 to ANI23/P105 pins to analog input of A/D converter or digital I/O of port.

The ADPC register can be set by an 8-bit memory manipulation instruction.

Reset signal generation clears this register to 00H.

Figure 12-15. Format of A/D Port Configuration Register (ADPC)

Address: F0076H After reset: 00H R/W

Symbol	7	6	5	4	3	2	1	0
ADPC	0	0	0	ADPC4 Note	ADPC3	ADPC2	ADPC1	ADPC0

					Analog input (A)/digital I/O (D) switching																						
ADPC4	ADPC3	ADPC2	ADPC1	ADPC0	ANI23/P105	ANI22/P104	ANI21/P103	ANI20/P102	ANI19/P101	ANI18/P100	ANI17/P97	ANI16/P96	ANI15/P95	ANI14/P94	ANI13/P93	ANI12/P92	ANI11/P91	ANI10/P90	ANI9/P87	ANI8/P86	ANI7/IVREF0/P85	ANI6/IVCMP03/P84	ANI5/IVCMP02/P83	ANI4/IVCMP01/P82	ANI3/IVCMP00/P81	ANI2/ANO0/P80	ANI1/AV_{REFM}/P34	ANI0/AV_{REFP}/P33
0	0	0	0	0	A	A	A	A	A	A	A	A	A	A	A	A	A	A	A	A	A	A	A	A	A	A	A	A
0	0	0	0	1	D	D	D	D	D	D	D	D	D	D	D	D	D	D	D	D	D	D	D	D	D	D	D	D
0	0	0	1	0	D	D	D	D	D	D	D	D	D	D	D	D	D	D	D	D	D	D	D	D	D	D	D	A
0	0	0	1	1	D	D	D	D	D	D	D	D	D	D	D	D	D	D	D	D	D	D	D	D	D	D	A	A
0	0	1	0	0	D	D	D	D	D	D	D	D	D	D	D	D	D	D	D	D	D	D	D	D	D	A	A	A
0	0	1	0	1	D	D	D	D	D	D	D	D	D	D	D	D	D	D	D	D	D	D	D	D	A	A	A	A
0	0	1	1	0	D	D	D	D	D	D	D	D	D	D	D	D	D	D	D	D	D	D	D	A	A	A	A	A
0	0	1	1	1	D	D	D	D	D	D	D	D	D	D	D	D	D	D	D	D	D	D	A	A	A	A	A	A
0	1	0	0	0	D	D	D	D	D	D	D	D	D	D	D	D	D	D	D	D	D	A	A	A	A	A	A	A
0	1	0	0	1	D	D	D	D	D	D	D	D	D	D	D	D	D	D	D	D	A	A	A	A	A	A	A	A
0	1	0	1	0	D	D	D	D	D	D	D	D	D	D	D	D	D	D	D	A	A	A	A	A	A	A	A	A
0	1	0	1	1	D	D	D	D	D	D	D	D	D	D	D	D	D	D	A	A	A	A	A	A	A	A	A	A
0	1	1	0	0	D	D	D	D	D	D	D	D	D	D	D	D	D	A	A	A	A	A	A	A	A	A	A	A
0	1	1	0	1	D	D	D	D	D	D	D	D	D	D	D	D	A	A	A	A	A	A	A	A	A	A	A	A
0	1	1	1	0	D	D	D	D	D	D	D	D	D	D	D	A	A	A	A	A	A	A	A	A	A	A	A	A
0	1	1	1	1	D	D	D	D	D	D	D	D	D	D	A	A	A	A	A	A	A	A	A	A	A	A	A	A
1	0	0	0	0	D	D	D	D	D	D	D	D	D	A	A	A	A	A	A	A	A	A	A	A	A	A	A	A
1	0	0	0	1	D	D	D	D	D	D	D	D	A	A	A	A	A	A	A	A	A	A	A	A	A	A	A	A
1	0	0	1	0	D	D	D	D	D	D	D	A	A	A	A	A	A	A	A	A	A	A	A	A	A	A	A	A
1	0	0	1	1	D	D	D	D	D	D	A	A	A	A	A	A	A	A	A	A	A	A	A	A	A	A	A	A
1	0	1	0	0	D	D	D	D	D	A	A	A	A	A	A	A	A	A	A	A	A	A	A	A	A	A	A	A
1	0	1	0	1	D	D	D	D	A	A	A	A	A	A	A	A	A	A	A	A	A	A	A	A	A	A	A	A
1	0	1	1	0	D	D	D	A	A	A	A	A	A	A	A	A	A	A	A	A	A	A	A	A	A	A	A	A
1	0	1	1	1	D	D	A	A	A	A	A	A	A	A	A	A	A	A	A	A	A	A	A	A	A	A	A	A
1	1	0	0	0	D	A	A	A	A	A	A	A	A	A	A	A	A	A	A	A	A	A	A	A	A	A	A	A
Other than above					Setting prohibited																							

(**Note** and **Cautions** are listed on the next page.)

Note Not provided in the RL78/F13 (LIN incorporated) products with 20, 30, 32, 48, or 64 pins and 16 Kbytes to 64 Kbytes of code flash memory.

Cautions 1. Set the port that is set to analog input by the ADPC register to the input mode by using port mode registers 3, 8 to 10, or 12 (PM3, PM8 to PM10, PM12).

2. Do not set the pin set by the ADPC register as digital I/O by the analog input channel specification register (ADS).

3. When using AV_{REFP} and AV_{REFM}, specify ANI0 and ANI1 as the analog input channels and specify input mode by using the port mode register.

12.3.12 A/D converter trigger select register 0 (ADTRGS0) (RL78/F13 only)

This register is used to enable or disable operation trigger generation of the A/D converter when the timer RD0 input capture B/compare match B interrupt request is generated.

Set this register while the timer RD0 input capture B/compare match B interrupt request is not generated.

Reset signal generation clears this register to 00H.

Figure 12-16. Format of A/D Converter Trigger Select Register 0 (ADTRGS0)

Address: F0789H After reset: 00H R/W

Symbol	7	6	5	4	3	2	1	0
ADTRGS0	0	0	0	0	0	0	0	ADTRGS00

ADTRGS00	Selection of the operation trigger of the A/D converter when the timer RD0 input capture B/compare match B interrupt request is generated
0	The operation trigger of the A/D converter is not generated when the interrupt request is generated.
1	The operation trigger of the A/D converter is generated when the interrupt request is generated (A/D conversion is started).

12.3.13 A/D converter trigger select register 1 (ADTRGS1) (RL78/F13 only)

This register is used to enable or disable operation trigger generation of the A/D converter when the timer RJ0 interrupt request is generated.

Set this register while the timer RJ0 interrupt request is not generated.

Reset signal generation clears this register to 00H.

Figure 12-17. Format of A/D Converter Trigger Select Register 1 (ADTRGS1)

Address: F078DH After reset: 00H R/W

Symbol	7	6	5	4	3	2	1	0
ADTRGS1	0	0	0	0	0	0	0	ADTRGS10

ADTRGS10	Selection of the operation trigger of the A/D converter when the timer RJ0 interrupt request is generated
0	The operation trigger of the A/D converter is not generated when the interrupt request is generated.
1	The operation trigger of the A/D converter is generated when the interrupt request is generated (A/D conversion is started).

12.3.14 Port mode control registers 7, 9, and 12 (PMC7, PMC9, PMC12)

These registers are used to switch the ANI24 to ANI30 pins between the analog input of the A/D converter and the digital I/O of the port.

The PMC7, PMC9, and PMC12 registers can be set by a 1-bit or 8-bit memory manipulation instruction.

Reset signal generation sets these registers to FFH.

Figure 12-18. Formats of Port Mode Control Registers 7, 9, and 12 (PMC7, PMC9, PMC12)

Address: F0067H After reset: FFH R/W

Symbol	7	6	5	4	3	2	1	0
PMC7	1	1	1	PMC74 Note 1	PMC73 Note 1	PMC72 Note 1	PMC71 Note 1	PMC70

Address: F0069H After reset: FFH R/W

Symbol	7	6	5	4	3	2	1	0
PMC9	PMC97 Note 2	PMC96 Note 2	1	1	1	1	1	1

Address: F006CH After reset: FFH R/W

Symbol	7	6	5	4	3	2	1	0
PMC12	1	1	PMC125	1	1	1	1	PMC120

PMC	Digital I/O/analog input selection
0	Digital I/O (dual-use function other than analog input)
1	Analog input

Notes 1. Be sure to clear the following bits to 0.
PMC71 to PMC74 bits in the RL78/F14 products with 64 pins and 128 Kbytes to 256 Kbytes of code flash memory.
PMC73 bit in the RL78/F14 products with 48 pins and 128 Kbytes to 256 Kbytes of code flash memory.

2. The ADPC and PMC9 registers are used to select the digital I/O or analog input functions for the P96/ANI16 and P97/ANI17 pins and for the P96/ANI26 and P97/ANI27 pins, respectively. For details on pin functions allocated to each product, see **1.5 Pin Configurations**.

Cautions 1. Set port pins specified as analog input pins to input mode by using port mode register x (PMx).

2. Be sure to set bits for pins that are not present to their initial values , and see Note 1 for PMC71 to PMC74.

12.3.15 Port mode registers 3, 7 to 10, and 12 (PM3, PM7 to PM10, PM12)

When using the ANI0/P33 to ANI23/P105 and ANI24/P125 to ANI30/P74 pins for an analog input port, set the PMmn bit to 1. The output latches of PMmn at this time may be 0 or 1.

If the PMmn bits are set to 0, they cannot be used as analog input port pins.

The PMm registers can be set by a 1-bit or 8-bit memory manipulation instruction.

Reset signal generation sets these registers to FFH.

Cautions 1. Available pins differ depending on the products. For details, see CHAPTER 2 PIN FUNCTIONS.

2. If a pin is set as an analog input port, not the pin level but 0 is always read.

Remark m = 3, 7 to 10, 12; n = 0 to 7

Figure 12-19. Formats of Port Mode Registers 3, 7 to 10, and 12 (PM3, PM7 to PM10, PM12) (100-pin Products in the RL78/F14)

Address: FFF23H After reset: FFH R/W

Symbol	7	6	5	4	3	2	1	0
PM3	1	1	1	PM34	PM33	1	1	1

Address: FFF27H After reset: FFH R/W

Symbol	7	6	5	4	3	2	1	0
PM7	1	1	1	PM74	PM73	PM72	PM71	PM70

Address: FFF28H After reset: FFH R/W

Symbol	7	6	5	4	3	2	1	0
PM8	PM87	PM86	PM85	PM84	PM83	PM82	PM81	PM80

Address: FFF29H After reset: FFH R/W

Symbol	7	6	5	4	3	2	1	0
PM9	PM97	PM96	PM95	PM94	PM93	PM92	PM91	PM90

Address: FFF2AH After reset: FFH R/W

Symbol	7	6	5	4	3	2	1	0
PM10	1	1	PM105	PM104	PM103	PM102	PM101	PM100

Address: FFF2CH After reset: FFH R/W

Symbol	7	6	5	4	3	2	1	0
PM12	1	1	PM125	1	1	1	1	PM120

PM bit	I/O mode selection
0	Output mode (output buffer on)
1	Input mode (output buffer off)

Caution When using AV_{REFP} and AV_{REFM}, specify ANI0 and ANI1 as the analog input channels and specify input mode by using the port mode register.

The ANI0/P33 to ANI23/P105 pins are as shown below depending on the settings of the A/D port configuration register (ADPC), analog input channel specification register (ADS), PM3, PM8, PM9, and PM10 registers.

Table 12-4. Setting Functions of ANI0/P33 to ANI23/P105 Pins

ADPC	PM3, PM8, PM9, PM10	ADS	ANI0/P33 to ANI23/P105 Pins
Digital I/O selection	Input mode	–	Digital input
	Output mode	–	Digital output
Analog input selection	Input mode	Selects ANI.	Analog input (to be converted)
		Does not select ANI.	Analog input (not to be converted)
	Output mode	Selects ANI.	Setting prohibited
		Does not select ANI.	

The ANI24 to ANI30 pins are as shown below depending on the settings of port mode control registers 7, 9, and 12 (PMC7, PMC9, PMC12), analog input channel specification register (ADS), PM7, PM9, and PM12 registers.

Table 12-5. Setting Functions of ANI24 to ANI30 Pins

PMC7, PMC9, and PMC12	PM7, PM9, and PM12	ADS	ANI24 to ANI30 Pins
Digital I/O selection	Input mode	–	Digital input
	Output mode	–	Digital output
Analog input selection	Input mode	Selects ANI.	Analog input (to be converted)
		Does not select ANI.	Analog input (not to be converted)
	Output mode	Selects ANI.	Setting prohibited
		Does not select ANI.	

12.4 A/D Converter Conversion Operations

The A/D converter conversion operations are described below.

<1> The voltage input to the selected analog input channel is sampled by the sample & hold circuit.

<2> When sampling has been done for a certain time, the sample & hold circuit is placed in the hold state and the sampled voltage is held until the A/D conversion operation has ended.

<3> Bit 9 of the successive approximation register (SAR) is set. The series resistor string voltage tap is set to (1/2) AV_{REF} by the tap selector.

<4> The voltage difference between the series resistor string voltage tap and sampled voltage is compared by the voltage comparator. If the analog input is greater than (1/2) AV_{REF}, the MSB bit of the SAR register remains set to 1. If the analog input is smaller than (1/2) AV_{REF}, the MSB bit is reset to 0.

<5> Next, bit 8 of the SAR register is automatically set to 1, and the operation proceeds to the next comparison. The series resistor string voltage tap is selected according to the preset value of bit 9, as described below.

- Bit 9 = 1: (3/4) AV_{REF}
- Bit 9 = 0: (1/4) AV_{REF}

The voltage tap and sampled voltage are compared and bit 8 of the SAR register is manipulated as follows.

- Sampled voltage ≥ Voltage tap: Bit 8 = 1
- Sampled voltage < Voltage tap: Bit 8 = 0

<6> Comparison is continued in this way up to bit 0 of the SAR register.

<7> Upon completion of the comparison of 10 bits, an effective digital result value remains in the SAR register, and the result value is transferred to the A/D conversion result register (ADCR, ADCRH) and then latched [Note 1].
At the same time, the A/D conversion end interrupt request (INTAD) can also be generated [Note 1].

<8> Repeat steps <1> to <7>, until the ADCS bit is cleared to 0 [Note 2].
To stop the A/D converter, clear the ADCS bit to 0.

Notes 1. If the A/D conversion result is outside the range specified by using the A/D conversion result comparison function (the value specified by the ADRCK bit of the ADM2 register and ADUL/ADLL registers; see **Figure 12-8**), the A/D conversion end interrupt request signal (INTAD) is not generated and no A/D conversion results are stored in the ADCR and ADCRH registers.

2. While in the sequential conversion mode, the ADCS flag is not automatically cleared to 0. This flag is not automatically cleared to 0 while in the one-shot conversion mode of the hardware trigger no-wait mode, either. Instead, 1 is retained.

Remarks 1. Two types of the A/D conversion result registers are available.

- ADCR register (16 bits): Store 10-bit A/D conversion value
- ADCRH register (8 bits): Store 8-bit A/D conversion value

2. AV_{REF}: The + side reference voltage of the A/D converter. This can be selected from AV_{REFP}, the internal reference voltage (1.45 V), and V_{DD}.

Figure 12-20. Conversion Operation of A/D Converter (Software Trigger Mode)

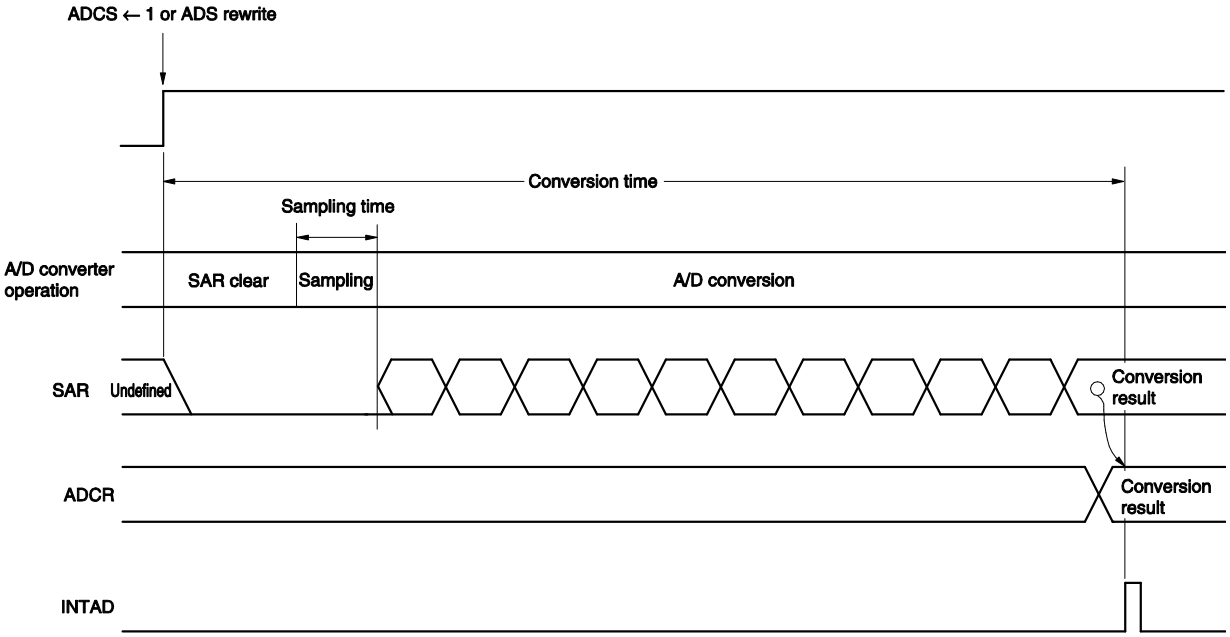

A/D conversion operations are performed continuously until bit 7 (ADCS) of the A/D converter mode register (ADM) is reset (0) by software.

If a write operation is performed to the analog input channel specification register (ADS) during an A/D conversion operation, the conversion operation is initialized, and if the ADCS bit is set (1), conversion starts again from the beginning.

Reset signal generation clears the A/D conversion result register (ADCR, ADCRH) to 0000H or 00H.

12.5 Input Voltage and Conversion Results

The relationship between the analog input voltage input to the analog input pins (ANI0 to ANI23, ANI24 to ANI30) and the theoretical A/D conversion result (stored in the 10-bit A/D conversion result register (ADCR)) is shown by the following expression.

$$SAR = INT\left(\frac{V_{AIN}}{AV_{REF}} \times 1024 + 0.5\right)$$

$$ADCR = SAR \times 64$$

or

$$\left(\frac{ADCR}{64} - 0.5\right) \times \frac{AV_{REF}}{1024} \leq V_{AIN} < \left(\frac{ADCR}{64} + 0.5\right) \times \frac{AV_{REF}}{1024}$$

where, INT( ): Function which returns integer part of value in parentheses

V_{AIN}: Analog input voltage

AV_{REF}: AV_{REF} pin voltage

ADCR: A/D conversion result register (ADCR) value

SAR: Successive approximation register

Figure 12-21 shows the relationship between the analog input voltage and the A/D conversion result.

Figure 12-21 Relationship Between Analog Input Voltage and A/D Conversion Result

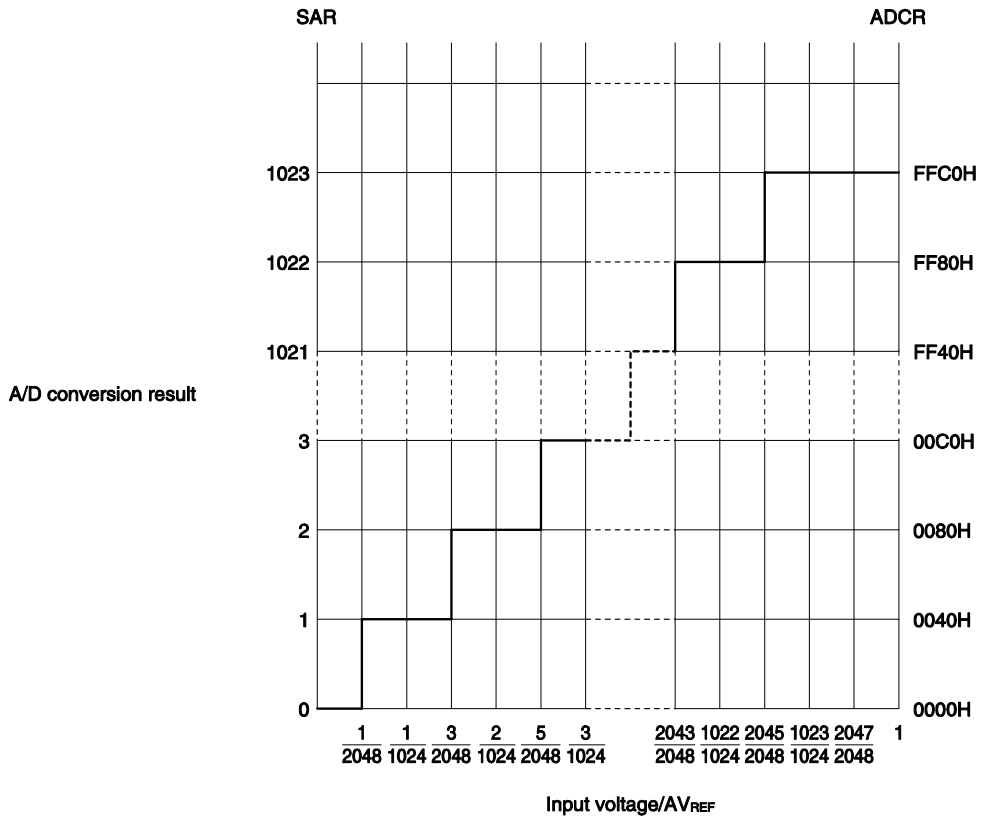

Remark AV_{REF}: The + side reference voltage of the A/D converter. This can be selected from AV_{REFP}, the internal reference voltage (1.45 V), and V_{DD}.

12.6 A/D Converter Operation Modes

The operation of each A/D converter mode is described below. In addition, the procedure for specifying each mode is described in **12.7 A/D Converter Setup Flowchart**.

12.6.1 Software trigger mode (select mode, sequential conversion mode)

<1> In the stop status, the ADCE bit of A/D converter mode register 0 (ADM0) is set to 1, and the system enters the A/D conversion standby status.

<2> After the software counts up to the stabilization wait time (1 μs), the ADCS bit of the ADM0 register is set to 1 to perform the A/D conversion of the analog input specified by the analog input channel specification register (ADS).

<3> When A/D conversion ends, the conversion result is stored in the A/D conversion result register (ADCR, ADCRH), and the A/D conversion end interrupt request signal (INTAD) is generated. After A/D conversion ends, the next A/D conversion immediately starts.

<4> When ADCS is overwritten with 1 during conversion operation, the current A/D conversion is interrupted, and conversion restarts. The partially converted data is discarded.

<5> When the value of the ADS register is rewritten or overwritten during conversion operation, the current A/D conversion is interrupted, and A/D conversion is performed on the analog input respecified by the ADS register. The partially converted data is discarded.

<6> Even if a hardware trigger is input during conversion operation, A/D conversion does not start.

<7> When ADCS is cleared to 0 during conversion operation, the current A/D conversion is interrupted, and the system enters the A/D conversion standby status.

<8> When ADCE is cleared to 0 while in the A/D conversion standby status, the A/D converter enters the stop status. When ADCE = 0, specifying 1 for ADCS is ignored and A/D conversion does not start.

Figure 12-22. Example of Software Trigger Mode (Select Mode, Sequential Conversion Mode) Operation Timing

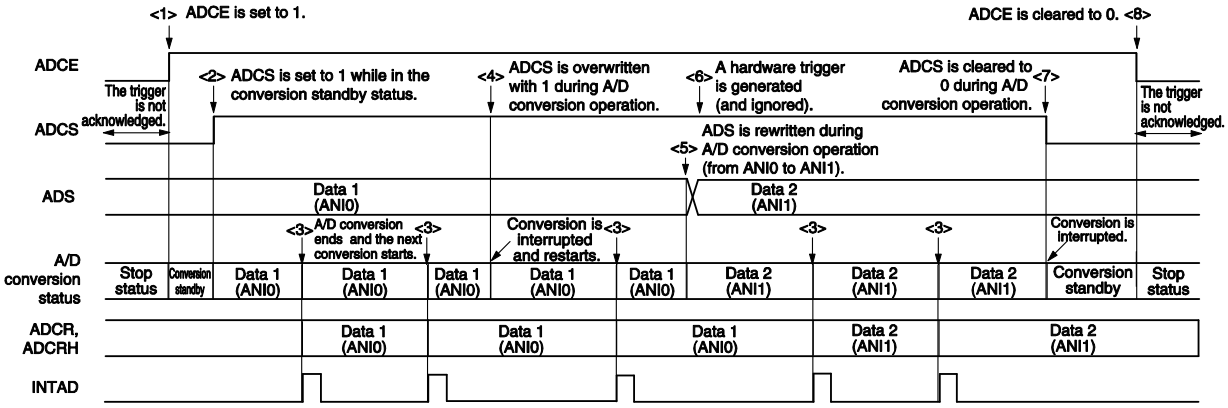

12.6.2 Software trigger mode (select mode, one-shot conversion mode)

<1> In the stop status, the ADCE bit of A/D converter mode register 0 (ADM0) is set to 1, and the system enters the A/D conversion standby status.

<2> After the software counts up to the stabilization wait time (1 μs), the ADCS bit of the ADM0 register is set to 1 to perform the A/D conversion of the analog input specified by the analog input channel specification register (ADS).

<3> When A/D conversion ends, the conversion result is stored in the A/D conversion result register (ADCR, ADCRH), and the A/D conversion end interrupt request signal (INTAD) is generated.

<4> After A/D conversion ends, the ADCS bit is automatically cleared to 0, and the system enters the A/D conversion standby status.

<5> When ADCS is overwritten with 1 during conversion operation, the current A/D conversion is interrupted, and conversion restarts. The partially converted data is discarded.

<6> When the value of the ADS register is rewritten or overwritten during conversion operation, the current A/D conversion is interrupted, and A/D conversion is performed on the analog input respecified by the ADS register. The partially converted data is discarded.

<7> When ADCS is cleared to 0 during conversion operation, the current A/D conversion is interrupted, and the system enters the A/D conversion standby status.

<8> When ADCE is cleared to 0 while in the A/D conversion standby status, the A/D converter enters the stop status. When ADCE = 0, specifying 1 for ADCS is ignored and A/D conversion does not start. In addition, A/D conversion does not start even if a hardware trigger is input while in the A/D conversion standby status.

Figure 12-23. Example of Software Trigger Mode (Select Mode, One-Shot Conversion Mode) Operation Timing

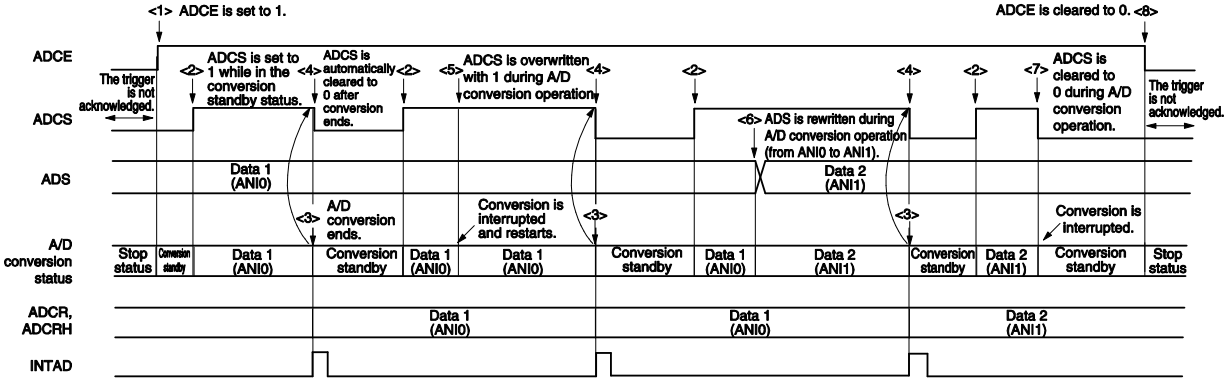

12.6.3 Software trigger mode (scan mode, sequential conversion mode)

<1> In the stop status, the ADCE bit of A/D converter mode register 0 (ADM0) is set to 1, and the system enters the A/D conversion standby status.

<2> After the software counts up to the stabilization wait time (1 μs), the ADCS bit of the ADM0 register is set to 1 to perform A/D conversion on the four analog input channels specified by scan 0 to scan 3, which are specified by the analog input channel specification register (ADS). A/D conversion is performed on the analog input channels in order, starting with that specified by scan 0.

<3> A/D conversion is sequentially performed on the four analog input channels, the conversion results are stored in the A/D conversion result register (ADCR, ADCRH) each time conversion ends, and the A/D conversion end interrupt request signal (INTAD) is generated. After A/D conversion of the four channels ends, the A/D conversion of the channel following the specified channel automatically starts (until all four channels are finished).

<4> When ADCS is overwritten with 1 during conversion operation, the current A/D conversion is interrupted, and conversion restarts at the first channel. The partially converted data is discarded.

<5> When the value of the ADS register is rewritten or overwritten during conversion operation, the current A/D conversion is interrupted, and A/D conversion is performed on the first channel respecified by the ADS register. The partially converted data is discarded.

<6> Even if a hardware trigger is input during conversion operation, A/D conversion does not start.

<7> When ADCS is cleared to 0 during conversion operation, the current A/D conversion is interrupted, and the system enters the A/D conversion standby status.

<8> When ADCE is cleared to 0 while in the A/D conversion standby status, the A/D converter enters the stop status. When ADCE = 0, specifying 1 for ADCS is ignored and A/D conversion does not start.

Figure 12-24. Example of Software Trigger Mode (Scan Mode, Sequential Conversion Mode) Operation Timing

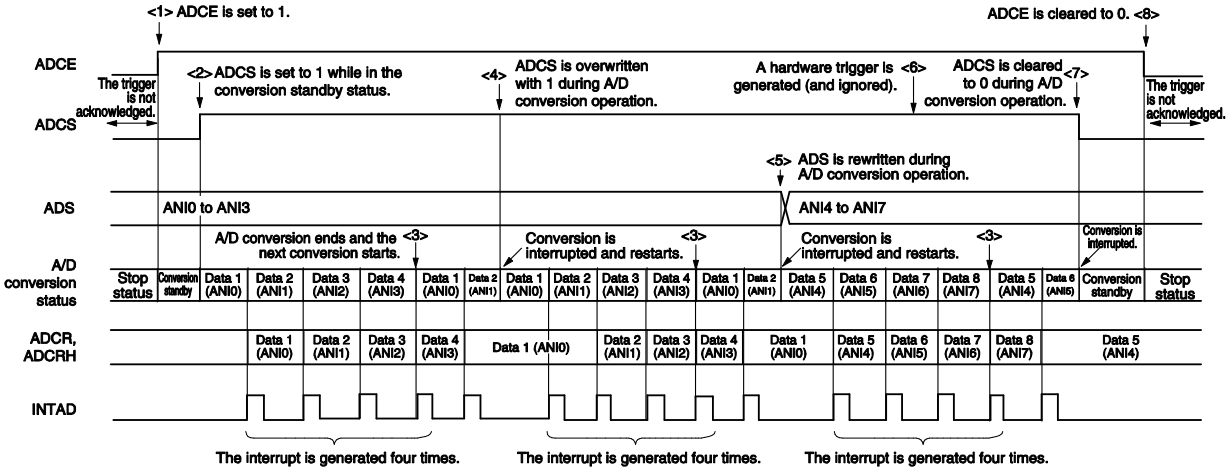

12.6.4 Software trigger mode (scan mode, one-shot conversion mode)

<1> In the stop status, the ADCE bit of A/D converter mode register 0 (ADM0) is set to 1, and the system enters the A/D conversion standby status.

<2> After the software counts up to the stabilization wait time (1 μs), the ADCS bit of the ADM0 register is set to 1 to perform A/D conversion on the four analog input channels specified by scan 0 to scan 3, which are specified by the analog input channel specification register (ADS). A/D conversion is performed on the analog input channels in order, starting with that specified by scan 0.

<3> A/D conversion is sequentially performed on the four analog input channels, the conversion results are stored in the A/D conversion result register (ADCR, ADCRH) each time conversion ends, and the A/D conversion end interrupt request signal (INTAD) is generated.

<4> After A/D conversion of the four channels ends, the ADCS bit is automatically cleared to 0, and the system enters the A/D conversion standby status.

<5> When ADCS is overwritten with 1 during conversion operation, the current A/D conversion is interrupted, and conversion restarts at the first channel. The partially converted data is discarded.

<6> When the value of the ADS register is rewritten or overwritten during conversion operation, the current A/D conversion is interrupted, and A/D conversion is performed on the first channel respecified by the ADS register. The partially converted data is discarded.

<7> When ADCS is cleared to 0 during conversion operation, the current A/D conversion is interrupted, and the system enters the A/D conversion standby status.

<8> When ADCE is cleared to 0 while in the A/D conversion standby status, the A/D converter enters the stop status. When ADCE = 0, specifying 1 for ADCS is ignored and A/D conversion does not start. In addition, A/D conversion does not start even if a hardware trigger is input while in the A/D conversion standby status.

Figure 12-25. Example of Software Trigger Mode (Scan Mode, One-Shot Conversion Mode) Operation Timing

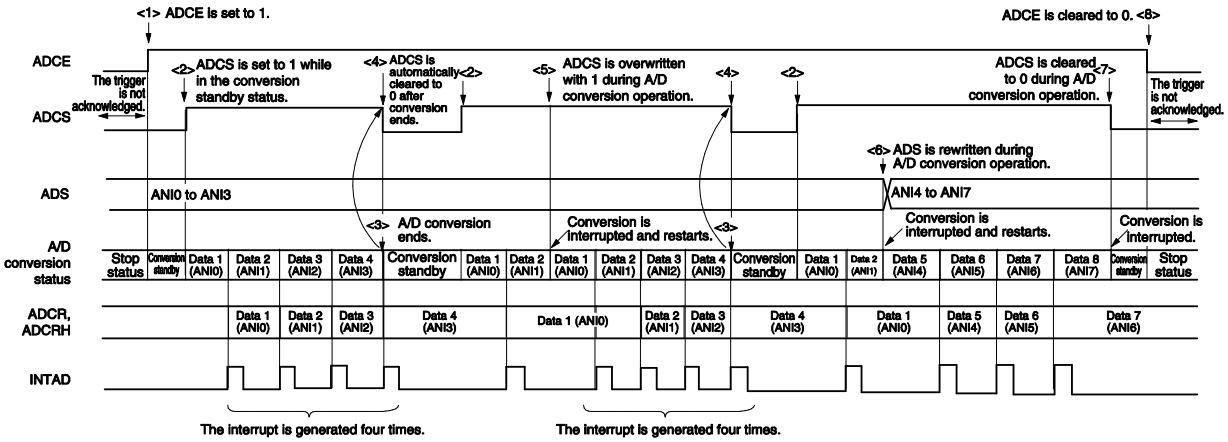

12.6.5 Hardware trigger no-wait mode (select mode, sequential conversion mode)

<1> In the stop status, the ADCE bit of A/D converter mode register 0 (ADM0) is set to 1, and the system enters the A/D conversion standby status.

<2> After the software counts up to the stabilization wait time (1 μs), the ADCS bit of the ADM0 register is set to 1 to place the system in the hardware trigger standby status (and conversion does not start at this stage). Note that, while in this status, A/D conversion does not start even if ADCS is set to 1.

<3> If a hardware trigger is input while ADCS = 1, A/D conversion is performed on the analog input specified by the analog input channel specification register (ADS).

<4> When A/D conversion ends, the conversion result is stored in the A/D conversion result register (ADCR, ADCRH), and the A/D conversion end interrupt request signal (INTAD) is generated. After A/D conversion ends, the next A/D conversion immediately starts.

<5> If a hardware trigger is input during conversion operation, the current A/D conversion is interrupted, and conversion restarts. The partially converted data is discarded.

<6> When the value of the ADS register is rewritten or overwritten during conversion operation, the current A/D conversion is interrupted, and A/D conversion is performed on the analog input respecified by the ADS register. The partially converted data is discarded.

<7> When ADCS is overwritten with 1 during conversion operation, the current A/D conversion is interrupted, and conversion restarts. The partially converted data is discarded.

<8> When ADCS is cleared to 0 during conversion operation, the current A/D conversion is interrupted, and the system enters the A/D conversion standby status. However, the A/D converter does not stop in this status.

<9> When ADCE is cleared to 0 while in the A/D conversion standby status, the A/D converter enters the stop status. When ADCS = 0, inputting a hardware trigger is ignored and A/D conversion does not start.

Figure 12-26. Example of Hardware Trigger No-Wait Mode (Select Mode, Sequential Conversion Mode) Operation Timing

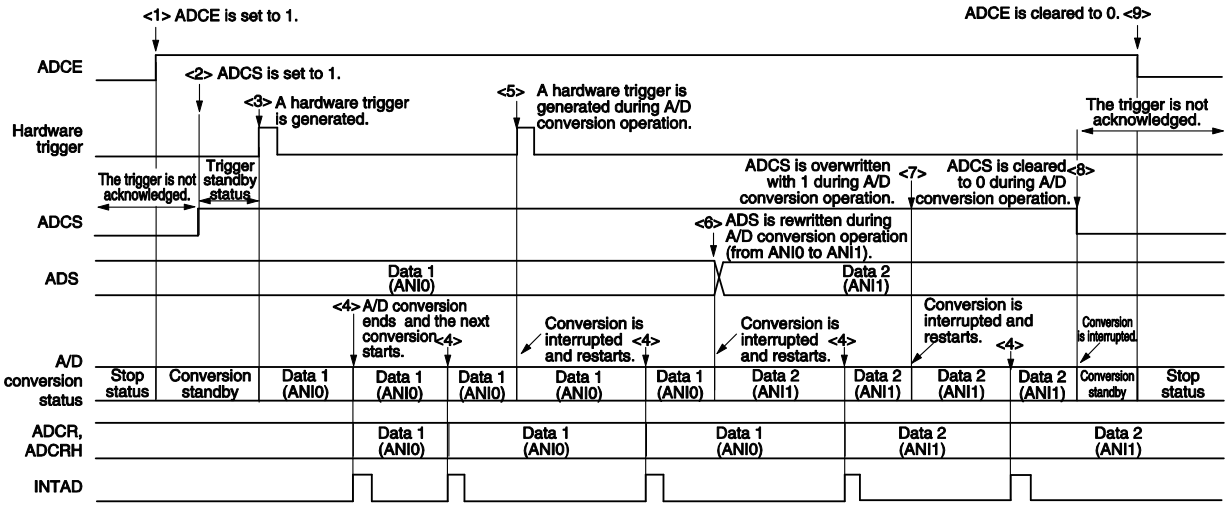

12.6.6 Hardware trigger no-wait mode (select mode, one-shot conversion mode)

<1> In the stop status, the ADCE bit of A/D converter mode register 0 (ADM0) is set to 1, and the system enters the A/D conversion standby status.

<2> After the software counts up to the stabilization wait time (1 μs), the ADCS bit of the ADM0 register is set to 1 to place the system in the hardware trigger standby status (and conversion does not start at this stage). Note that, while in this status, A/D conversion does not start even if ADCS is set to 1.

<3> If a hardware trigger is input while ADCS = 1, A/D conversion is performed on the analog input specified by the analog input channel specification register (ADS).

<4> When A/D conversion ends, the conversion result is stored in the A/D conversion result register (ADCR, ADCRH), and the A/D conversion end interrupt request signal (INTAD) is generated.

<5> After A/D conversion ends, the ADCS bit remains set to 1, and the system enters the A/D conversion standby status.

<6> If a hardware trigger is input during conversion operation, the current A/D conversion is interrupted, and conversion restarts. The partially converted data is discarded.

<7> When the value of the ADS register is rewritten or overwritten during conversion operation, the current A/D conversion is interrupted, and A/D conversion is performed on the analog input respecified by the ADS register. The partially converted data is discarded.

<8> When ADCS is overwritten with 1 during conversion operation, the current A/D conversion is interrupted, and conversion restarts. The partially converted data is discarded.

<9> When ADCS is cleared to 0 during conversion operation, the current A/D conversion is interrupted, and the system enters the A/D conversion standby status. However, the A/D converter does not stop in this status.

<10> When ADCE is cleared to 0 while in the A/D conversion standby status, the A/D converter enters the stop status. When ADCS = 0, inputting a hardware trigger is ignored and A/D conversion does not start.

Figure 12-27. Example of Hardware Trigger No-Wait Mode (Select Mode, One-Shot Conversion Mode) Operation Timing

<R>

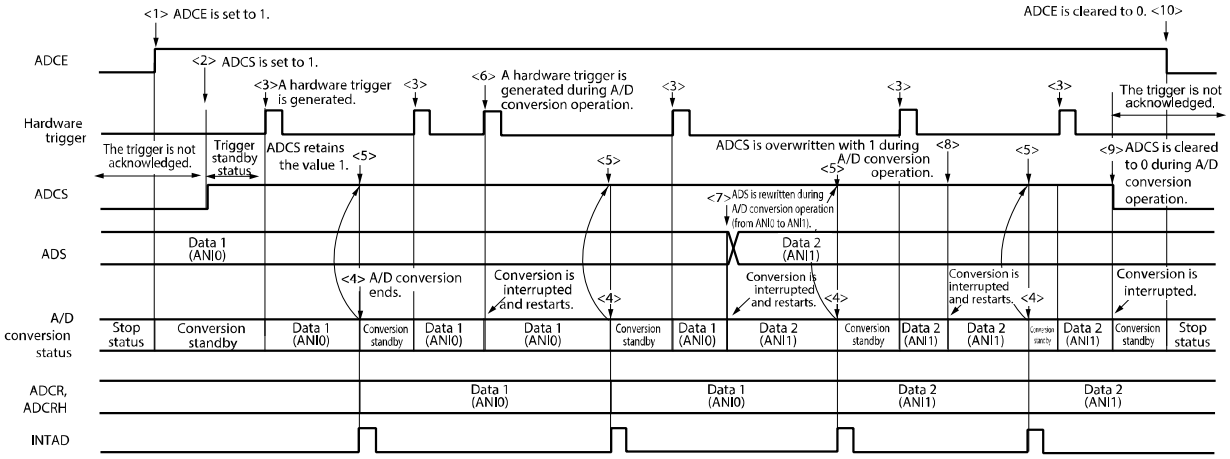

12.6.7 Hardware trigger no-wait mode (scan mode, sequential conversion mode)

<1> In the stop status, the ADCE bit of A/D converter mode register 0 (ADM0) is set to 1, and the system enters the A/D conversion standby status.

<2> After the software counts up to the stabilization wait time (1 μs), the ADCS bit of the ADM0 register is set to 1 to place the system in the hardware trigger standby status (and conversion does not start at this stage). Note that, while in this status, A/D conversion does not start even if ADCS is set to 1.

<3> If a hardware trigger is input while ADCS = 1, A/D conversion is performed on the four analog input channels specified by scan 0 to scan 3, which are specified by the analog input channel specification register (ADS). A/D conversion is performed on the analog input channels in order, starting with that specified by scan 0.

<4> A/D conversion is sequentially performed on the four analog input channels, the conversion results are stored in the A/D conversion result register (ADCR, ADCRH) each time conversion ends, and the A/D conversion end interrupt request signal (INTAD) is generated. After A/D conversion of the four channels ends, the A/D conversion of the channel following the specified channel automatically starts.

<5> If a hardware trigger is input during conversion operation, the current A/D conversion is interrupted, and conversion restarts at the first channel. The partially converted data is discarded.

<6> When the value of the ADS register is rewritten or overwritten during conversion operation, the current A/D conversion is interrupted, and A/D conversion is performed on the first channel respecified by the ADS register. The partially converted data is discarded.

<7> When ADCS is overwritten with 1 during conversion operation, the current A/D conversion is interrupted, and conversion restarts. The partially converted data is discarded.

<8> When ADCS is cleared to 0 during conversion operation, the current A/D conversion is interrupted, and the system enters the A/D conversion standby status. However, the A/D converter does not stop in this status.

<9> When ADCE is cleared to 0 while in the A/D conversion standby status, the A/D converter enters the stop status. When ADCE = 0, specifying 1 for ADCS is ignored and A/D conversion does not start.

<R>

Figure 12-28. Example of Hardware Trigger No-Wait Mode (Scan Mode, Sequential Conversion Mode) Operation Timing

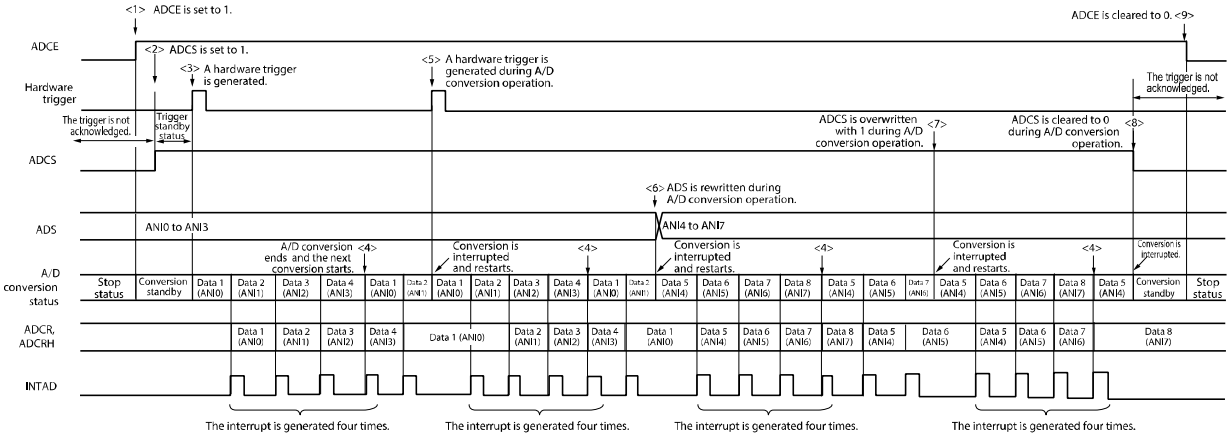

12.6.8 Hardware trigger no-wait mode (scan mode, one-shot conversion mode)

<1> In the stop status, the ADCE bit of A/D converter mode register 0 (ADM0) is set to 1, and the system enters the A/D conversion standby status.

<2> After the software counts up to the stabilization wait time (1 μs), the ADCS bit of the ADM0 register is set to 1 to place the system in the hardware trigger standby status (and conversion does not start at this stage). Note that, while in this status, A/D conversion does not start even if ADCS is set to 1.

<3> If a hardware trigger is input while ADCS = 1, A/D conversion is performed on the four analog input channels specified by scan 0 to scan 3, which are specified by the analog input channel specification register (ADS). A/D conversion is performed on the analog input channels in order, starting with that specified by scan 0.

<4> A/D conversion is sequentially performed on the four analog input channels, the conversion results are stored in the A/D conversion result register (ADCR, ADCRH) each time conversion ends, and the A/D conversion end interrupt request signal (INTAD) is generated.

<5> After A/D conversion of the four channels ends, the ADCS bit remains set to 1, and the system enters the A/D conversion standby status.

<6> If a hardware trigger is input during conversion operation, the current A/D conversion is interrupted, and conversion restarts at the first channel. The partially converted data is discarded.

<7> When the value of the ADS register is rewritten or overwritten during conversion operation, the current A/D conversion is interrupted, and A/D conversion is performed on the first channel respecified by the ADS register. The partially converted data is discarded.

<8> When ADCS is overwritten with 1 during conversion operation, the current A/D conversion is interrupted, and conversion restarts at the first channel. The partially converted data is discarded.

<9> When ADCS is cleared to 0 during conversion operation, the current A/D conversion is interrupted, and the system enters the A/D conversion standby status. However, the A/D converter does not stop in this status.

<10> When ADCE is cleared to 0 while in the A/D conversion standby status, the A/D converter enters the stop status. When ADCS = 0, inputting a hardware trigger is ignored and A/D conversion does not start.

<R>

Figure 12-29. Example of Hardware Trigger No-Wait Mode (Scan Mode, One-Shot Conversion Mode) Operation Timing

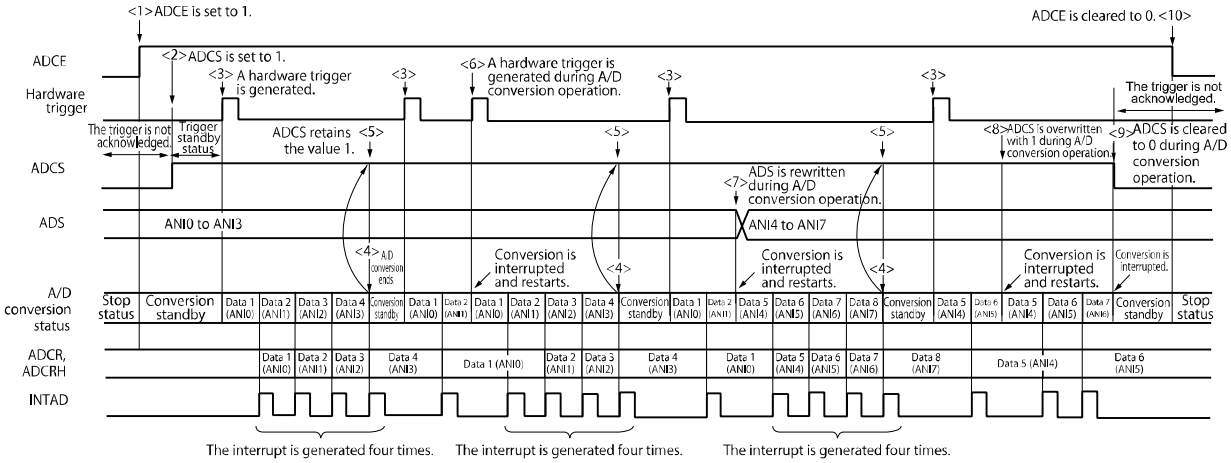

12.6.9 Hardware trigger wait mode (select mode, sequential conversion mode)

<1> In the stop status, the ADCE bit of A/D converter mode register 0 (ADM0) is set to 1, and the system enters the hardware trigger standby status.

<2> If a hardware trigger is input while in the hardware trigger standby status, A/D conversion is performed on the analog input specified by the analog input channel specification register (ADS). The ADCS bit of the ADM0 register is automatically set to 1 according to the hardware trigger input.

<3> When A/D conversion ends, the conversion result is stored in the A/D conversion result register (ADCR, ADCRH), and the A/D conversion end interrupt request signal (INTAD) is generated. After A/D conversion ends, the next A/D conversion immediately starts. (At this time, no hardware trigger is necessary.)

<4> If a hardware trigger is input during conversion operation, the current A/D conversion is interrupted, and conversion restarts. The partially converted data is discarded.

<5> When the value of the ADS register is rewritten or overwritten during conversion operation, the current A/D conversion is interrupted, and A/D conversion is performed on the analog input respecified by the ADS register. The partially converted data is discarded.

<6> When ADCS is overwritten with 1 during conversion operation, the current A/D conversion is interrupted, and conversion restarts. The partially converted data is discarded.

<7> When ADCS is cleared to 0 during conversion operation, the current A/D conversion is interrupted, the system enters the hardware trigger standby status, and the A/D converter enters the stop status. When ADCE = 0, inputting a hardware trigger is ignored and A/D conversion does not start.

Figure 12-30. Example of Hardware Trigger Wait Mode (Select Mode, Sequential Conversion Mode) Operation Timing

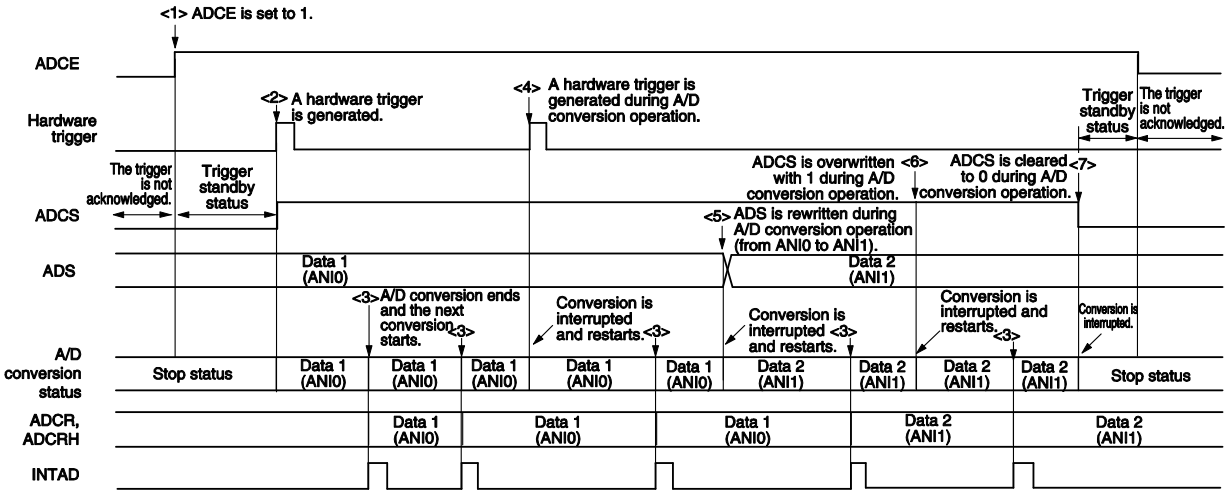

12.6.10 Hardware trigger wait mode (select mode, one-shot conversion mode)

<1> In the stop status, the ADCE bit of A/D converter mode register 0 (ADM0) is set to 1, and the system enters the hardware trigger standby status.

<2> If a hardware trigger is input while in the hardware trigger standby status, A/D conversion is performed on the analog input specified by the analog input channel specification register (ADS). The ADCS bit of the ADM0 register is automatically set to 1 according to the hardware trigger input.

<3> When A/D conversion ends, the conversion result is stored in the A/D conversion result register (ADCR, ADCRH), and the A/D conversion end interrupt request signal (INTAD) is generated.

<4> After A/D conversion ends, the ADCS bit is automatically cleared to 0, and the A/D converter enters the stop status.

<5> If a hardware trigger is input during conversion operation, the current A/D conversion is interrupted, and conversion restarts. The partially converted data is discarded.

<6> When the value of the ADS register is rewritten or overwritten during conversion operation, the current A/D conversion is interrupted, and A/D conversion is performed on the analog input respecified by the ADS register. The partially converted data is discarded.

<7> When ADCS is overwritten with 1 during conversion operation, the current A/D conversion is interrupted, and conversion restarts. The partially converted data is initialized.

<8> When ADCS is cleared to 0 during conversion operation, the current A/D conversion is interrupted, the system enters the hardware trigger standby status, and the A/D converter enters the stop status. When ADCE = 0, inputting a hardware trigger is ignored and A/D conversion does not start.

Figure 12-31. Example of Hardware Trigger Wait Mode (Select Mode, One-Shot Conversion Mode) Operation Timing

<R>

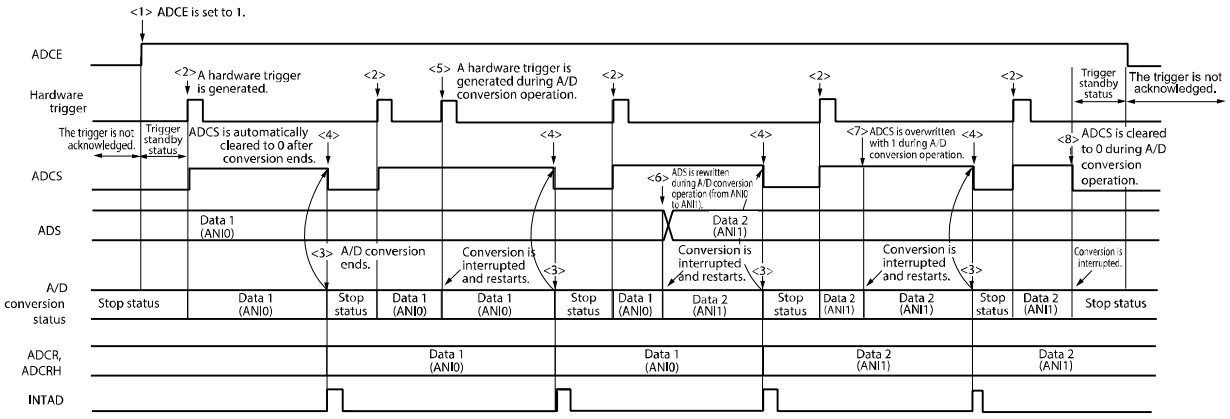

12.6.11 Hardware trigger wait mode (scan mode, sequential conversion mode)

<1> In the stop status, the ADCE bit of A/D converter mode register 0 (ADM0) is set to 1, and the system enters the A/D conversion standby status.

<2> If a hardware trigger is input while in the hardware trigger standby status, A/D conversion is performed on the four analog input channels specified by scan 0 to scan 3, which are specified by the analog input channel specification register (ADS). The ADCS bit of the ADM0 register is automatically set to 1 according to the hardware trigger input. A/D conversion is performed on the analog input channels in order, starting with that specified by scan 0.

<3> A/D conversion is sequentially performed on the four analog input channels, the conversion results are stored in the A/D conversion result register (ADCR, ADCRH) each time conversion ends, and the A/D conversion end interrupt request signal (INTAD) is generated. After A/D conversion of the four channels ends, the A/D conversion of the channel following the specified channel automatically starts.

<4> If a hardware trigger is input during conversion operation, the current A/D conversion is interrupted, and conversion restarts at the first channel. The partially converted data is discarded.

<5> When the value of the ADS register is rewritten or overwritten during conversion operation, the current A/D conversion is interrupted, and A/D conversion is performed on the first channel respecified by the ADS register. The partially converted data is discarded.

<6> When ADCS is overwritten with 1 during conversion operation, the current A/D conversion is interrupted, and conversion restarts. The partially converted data is discarded.

<7> When ADCS is cleared to 0 during conversion operation, the current A/D conversion is interrupted, the system enters the hardware trigger standby status, and the A/D converter enters the stop status. When ADCE = 0, inputting a hardware trigger is ignored and A/D conversion does not start.

Figure 12-32. Example of Hardware Trigger Wait Mode (Scan Mode, Sequential Conversion Mode) Operation Timing

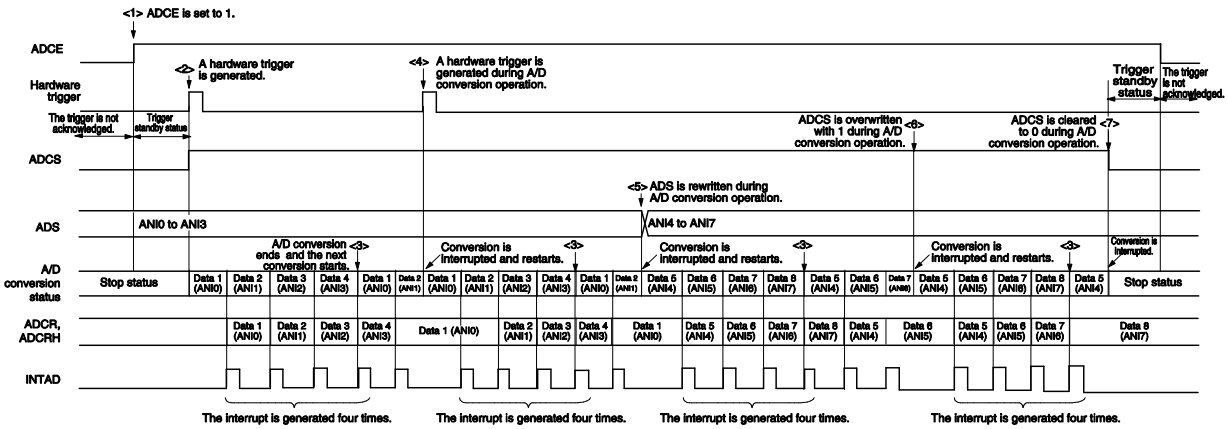

12.6.12 Hardware trigger wait mode (scan mode, one-shot conversion mode)

<1> In the stop status, the ADCE bit of A/D converter mode register 0 (ADM0) is set to 1, and the system enters the A/D conversion standby status.

<2> If a hardware trigger is input while in the hardware trigger standby status, A/D conversion is performed on the four analog input channels specified by scan 0 to scan 3, which are specified by the analog input channel specification register (ADS). The ADCS bit of the ADM0 register is automatically set to 1 according to the hardware trigger input. A/D conversion is performed on the analog input channels in order, starting with that specified by scan 0.

<3> A/D conversion is sequentially performed on the four analog input channels, the conversion results are stored in the A/D conversion result register (ADCR, ADCRH) each time conversion ends, and the A/D conversion end interrupt request signal (INTAD) is generated.

<4> After A/D conversion ends, the ADCS bit is automatically cleared to 0, and the A/D converter enters the stop status.

<5> If a hardware trigger is input during conversion operation, the current A/D conversion is interrupted, and conversion restarts at the first channel. The partially converted data is discarded.

<6> When the value of the ADS register is rewritten or overwritten during conversion operation, the current A/D conversion is interrupted, and A/D conversion is performed on the first channel respecified by the ADS register. The partially converted data is discarded.

<7> When ADCS is overwritten with 1 during conversion operation, the current A/D conversion is interrupted, and conversion restarts. The partially converted data is discarded.

<8> When ADCS is cleared to 0 during conversion operation, the current A/D conversion is interrupted, the system enters the hardware trigger standby status, and the A/D converter enters the stop status. When ADCE = 0, inputting a hardware trigger is ignored and A/D conversion does not start.

Figure 12-33. Example of Hardware Trigger Wait Mode (Scan Mode, One-Shot Conversion Mode) Operation Timing

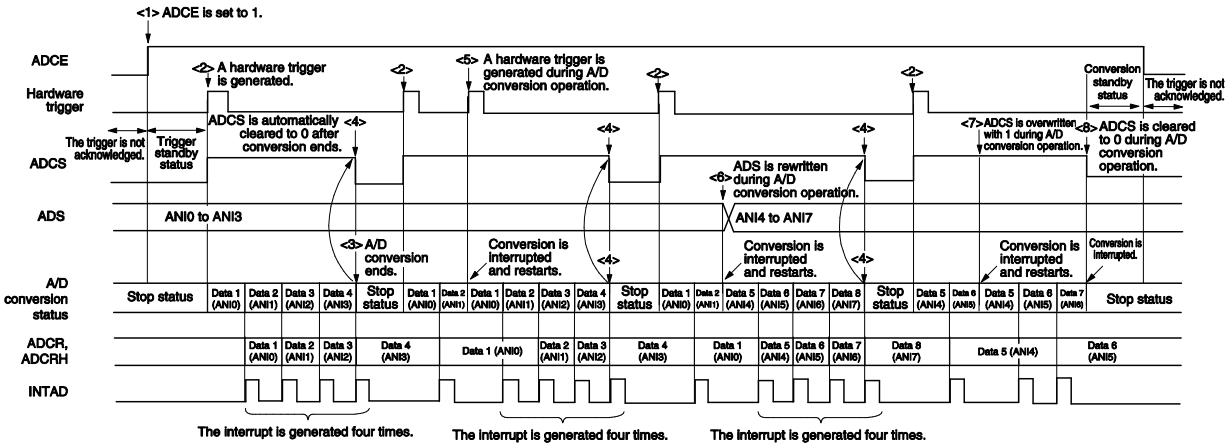

12.7 A/D Converter Setup Flowchart

The A/D converter setup flowchart in each operation mode is described below.

12.7.1 Setting up software trigger mode

Figure 12-34. Setting up Software Trigger Mode

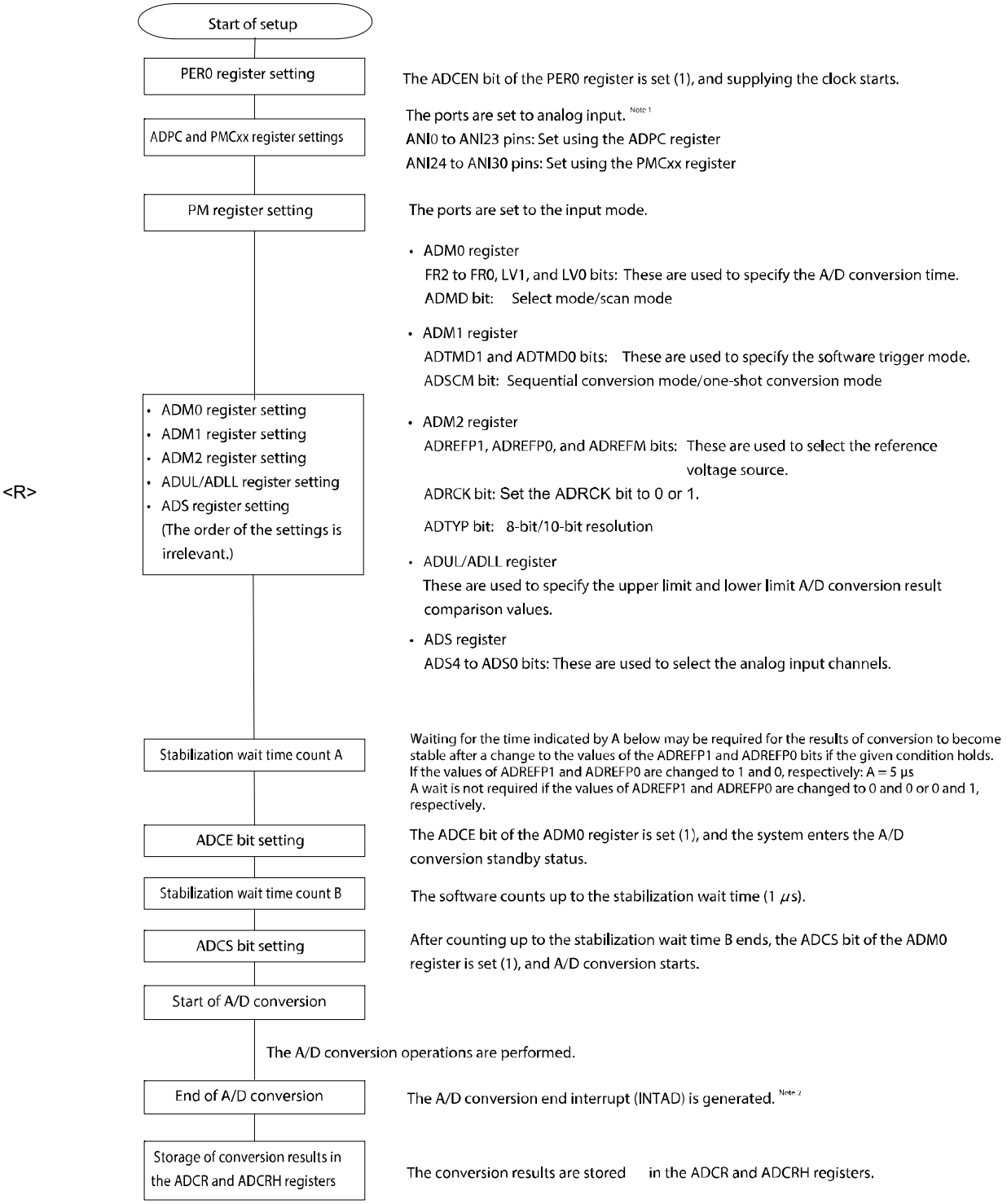

<R>

Notes 1. Depends on the products.

2. Depending on the settings of the ADRCK bit and ADUL/ADLL registers, there is a possibility of no interrupt signal being generated. In this case, the results are not stored in the ADCR and ADCRH registers.

12.7.2 Setting up hardware trigger no-wait mode

Figure 12-35. Setting up Hardware Trigger No-Wait Mode

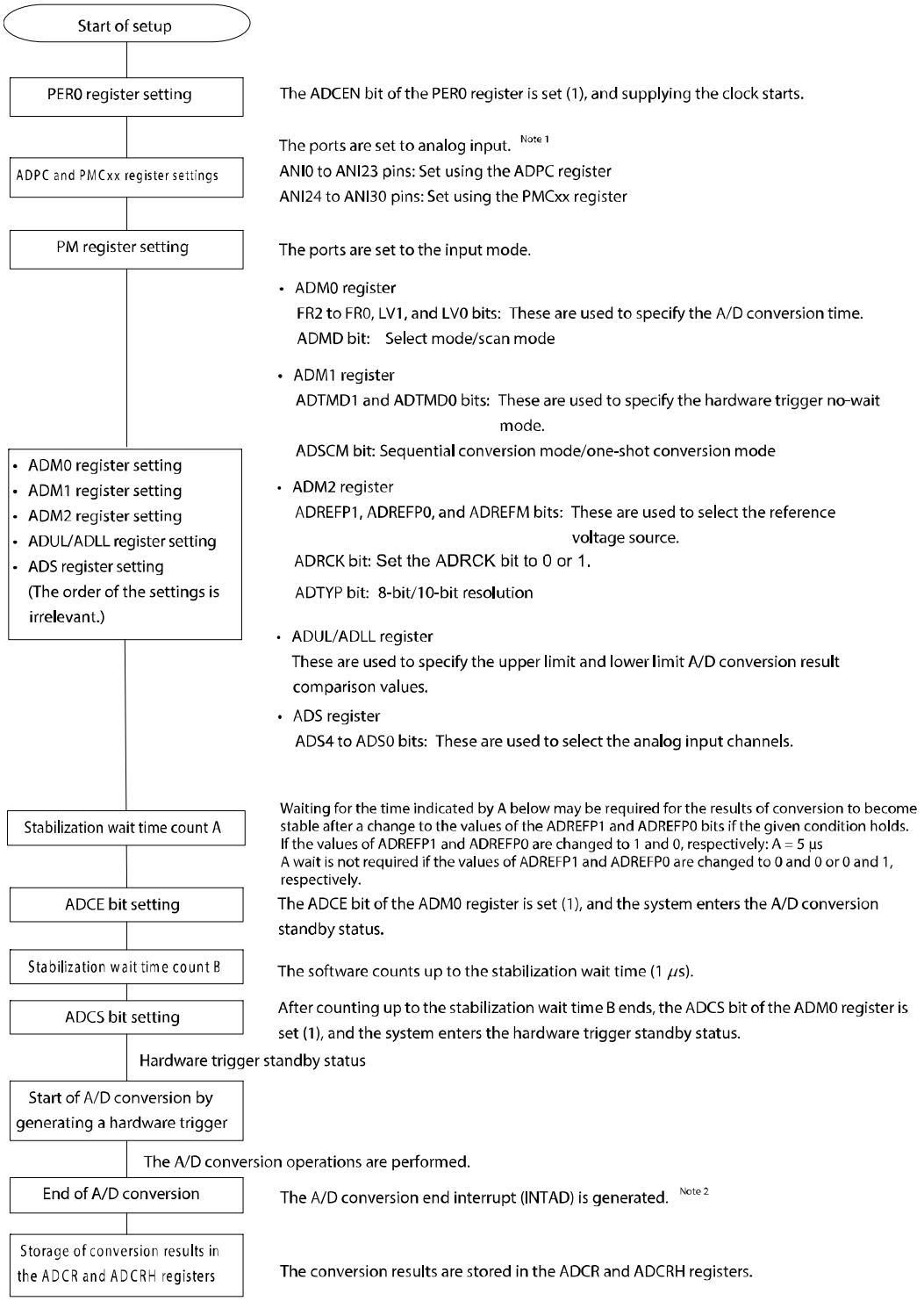

<R>

Notes 1. Depends on the products.

2. Depending on the settings of the ADRCK bit and ADUL/ADLL registers, there is a possibility of no interrupt signal being generated. In this case, the results are not stored in the ADCR and ADCRH registers.

12.7.3 Setting up hardware trigger wait mode

Figure 12-36. Setting up Hardware Trigger Wait Mode

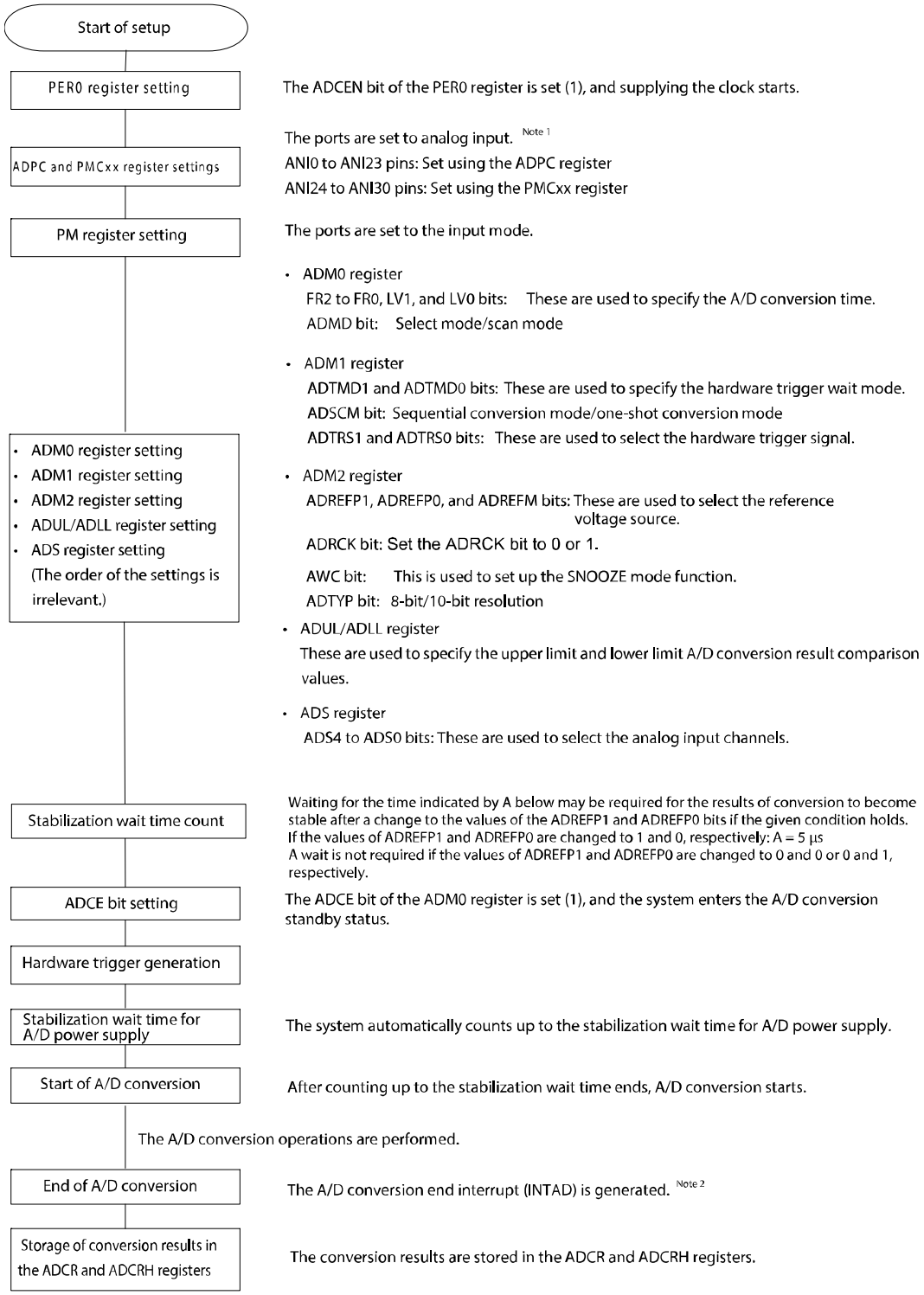

<R>

Notes 1. Depends on the products.

2. Depending on the settings of the ADRCK bit and ADUL/ADLL registers, there is a possibility of no interrupt signal being generated. In this case, the results are not stored in the ADCR and ADCRH registers.

12.7.4 Setup when using temperature sensor (example for software trigger mode and one-shot conversion mode)

Figure 12-37. Setup When Using Temperature Sensor

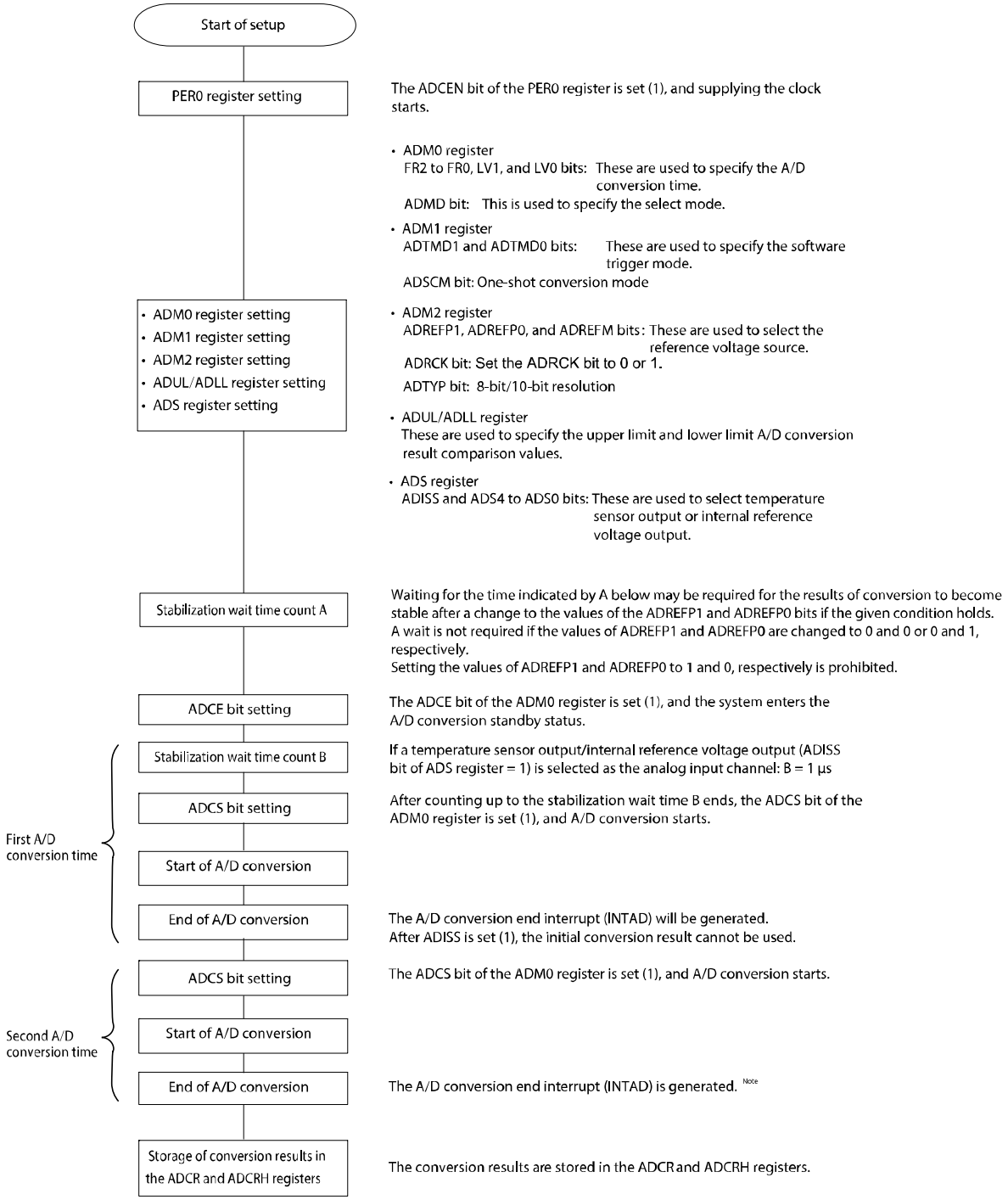

Note Depending on the settings of the ADRCK bit and ADUL/ADLL registers, there is a possibility of no interrupt signal being generated. In this case, the results are not stored in the ADCR and ADCRH registers.

12.7.5 Setting up test mode

Figure 12-38. Setting up Test Trigger Mode

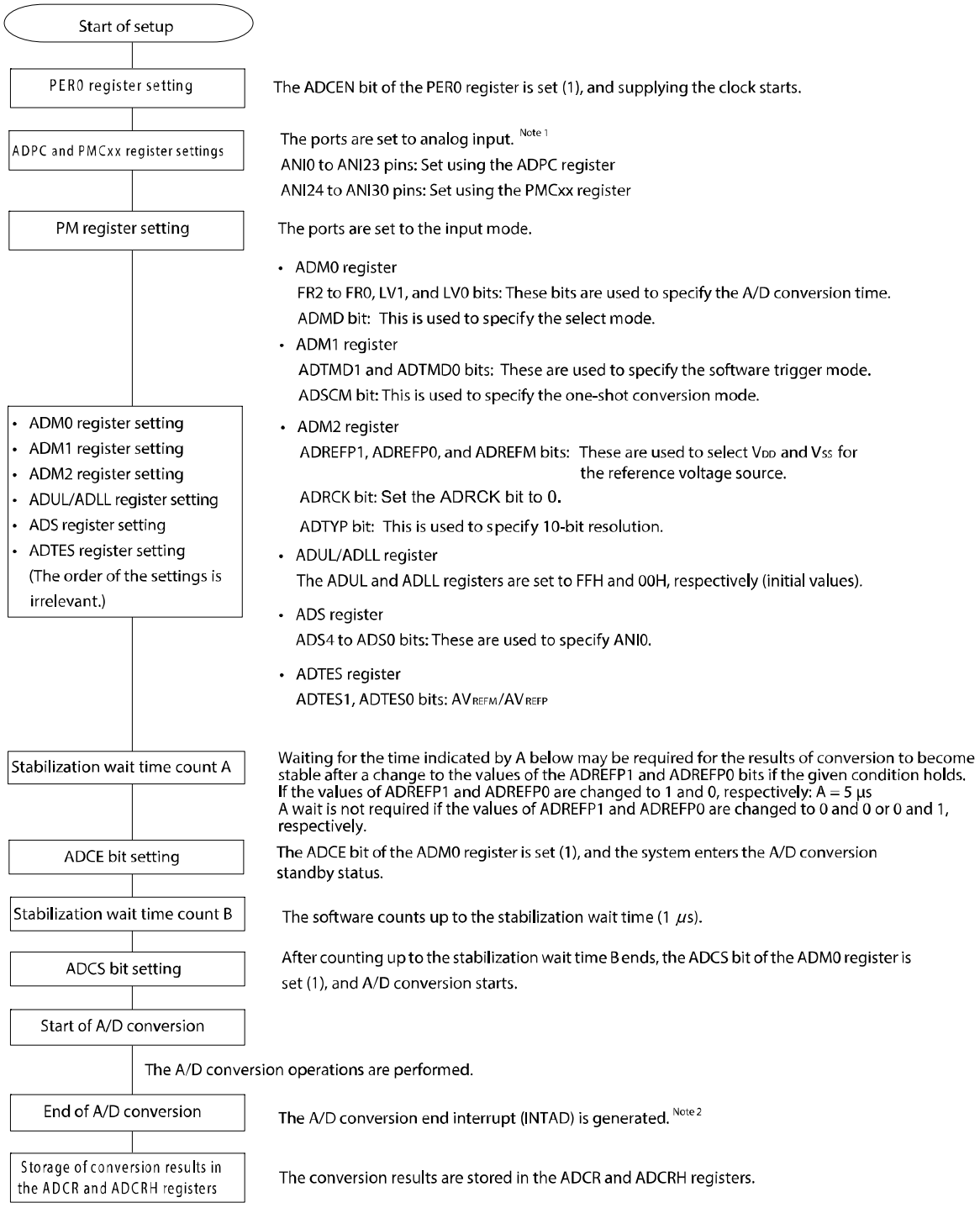

<R>

Notes 1. Depends on the products.

2. Depending on the settings of the ADRCK bit and ADUL/ADLL registers, there is a possibility of no interrupt signal being generated. In this case, the results are not stored in the ADCR and ADCRH registers.

12.8 SNOOZE Mode Function

In the SNOOZE mode, A/D conversion is triggered by inputting a hardware trigger in the STOP mode. Normally, A/D conversion is stopped while in the STOP mode, but, by using the SNOOZE mode, A/D conversion can be performed without operating the CPU by inputting a hardware trigger. This is effective for reducing the operation current.

If the A/D conversion result range is specified using the ADUL and ADLL registers, A/D conversion results can be judged at a certain interval of time in SNOOZE mode. Using this function enables power supply voltage monitoring and input key judgment based on A/D inputs.

In the SNOOZE mode, only the following two conversion modes can be used:

- Hardware trigger wait mode (select mode, one-shot conversion mode)
- Hardware trigger wait mode (scan mode, one-shot conversion mode)

Caution The SNOOZE mode can only be specified when the high-speed on-chip oscillator clock is selected for f_{CLK}.

Figure 12-39. Block Diagram When Using SNOOZE Mode Function

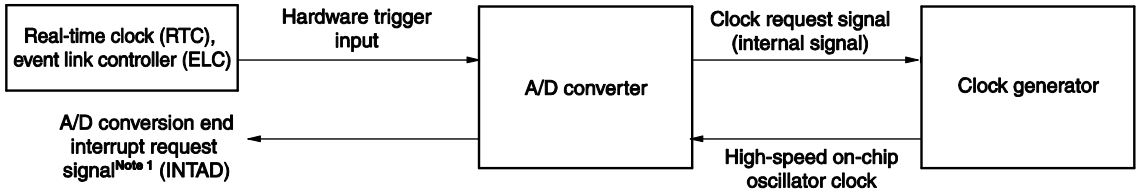

When using the SNOOZE mode function, the initial setting of each register is specified before switching to the STOP mode. (For details about these settings, see **12.7.3 Setting up hardware trigger wait mode**[Note 2].) At this time, bit 2 (AWC) of A/D converter mode register 2 (ADM2) is set to 1. After the initial settings are specified, bit 0 (ADCE) of A/D converter mode register 0 (ADM0) is set to 1.

If a hardware trigger is input after switching to the STOP mode, the high-speed on-chip oscillator clock is supplied to the A/D converter. After supplying this clock, the system automatically counts up to the stabilization wait time, and then A/D conversion starts.

The SNOOZE mode operation after A/D conversion ends differs depending on whether an interrupt signal is generated[Note 1].

Notes 1. Depending on the setting of the A/D conversion result comparison function (ADRCK bit, ADUL/ADLL register), there is a possibility of no interrupt signal being generated.

2. Be sure to set the ADM1 register to E1H, E2H, or E3H.

Remark The hardware trigger is event selected by ELC, INTRTC, or INTTM01.
Specify the hardware trigger by using the A/D converter mode register 1 (ADM1).

12.8.1 If an interrupt is generated after A/D conversion ends

If the A/D conversion result value is inside the range of values specified by the A/D conversion result comparison function (which is set up by using the ADRCK bit and ADUL/ADLL register), the A/D conversion end interrupt request signal (INTAD) is generated.

- While in the select mode

  When A/D conversion ends and an A/D conversion end interrupt request signal (INTAD) is generated, the A/D converter returns to normal operation mode from SNOOZE mode. At this time, be sure to clear bit 2 (AWC = 0: SNOOZE mode release) of the A/D converter mode register 2 (ADM2). If the AWC bit is left set to 1, A/D conversion will not start normally in the subsequent SNOOZE or normal operation mode.

- While in the scan mode

  If even one A/D conversion end interrupt request signal (INTAD) is generated during A/D conversion of the four channels, the A/D converter switches from the SNOOZE mode to the normal operation mode. At this time, be sure to clear bit 2 (AWC = 0: SNOOZE mode release) of the A/D converter mode register 2 (ADM2). If the AWC bit is left set to 1, A/D conversion will not start normally in the subsequent SNOOZE or normal operation mode.

Figure 12-40. Operation Example When Interrupt Is Generated After A/D Conversion Ends (While in Scan Mode)

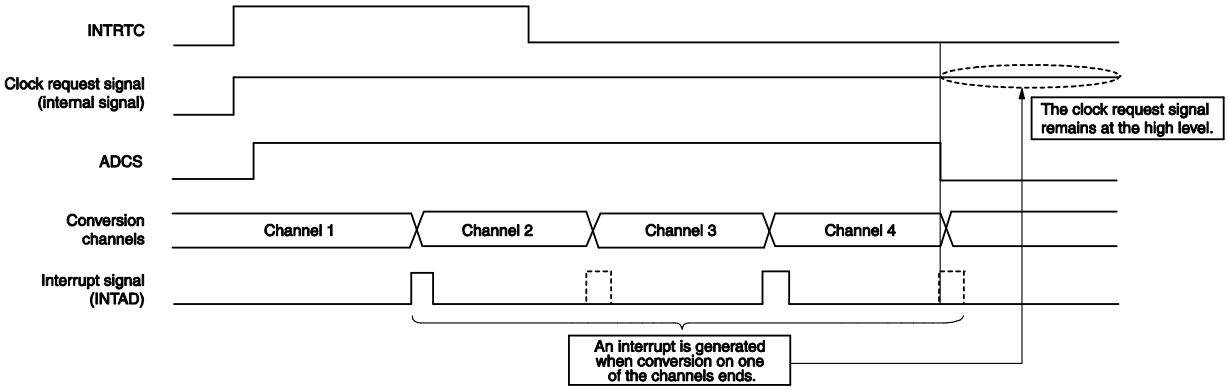

12.8.2 If no interrupt is generated after A/D conversion ends

If the A/D conversion result value is outside the range of values specified by the A/D conversion result comparison function (which is set up by using the ADRCK bit and ADUL/ADLL register), the A/D conversion end interrupt request signal (INTAD) is not generated.

- While in the select mode
  If the A/D conversion end interrupt request signal (INTAD) is not generated after A/D conversion ends, the clock request signal (an internal signal) is automatically set to the low level, and supplying the high-speed on-chip oscillator clock stops. If a hardware trigger is input later, A/D conversion work is again performed in the SNOOZE mode.

- While in the scan mode
  If the A/D conversion end interrupt request signal (INTAD) is not generated even once during A/D conversion of the four channels, the clock request signal (an internal signal) is automatically set to the low level after A/D conversion of the four channels ends, and supplying the high-speed on-chip oscillator clock stops. If a hardware trigger is input later, A/D conversion work is again performed in the SNOOZE mode.

Figure 12-41. Operation Example When No Interrupt Is Generated After A/D Conversion Ends (While in Scan Mode)

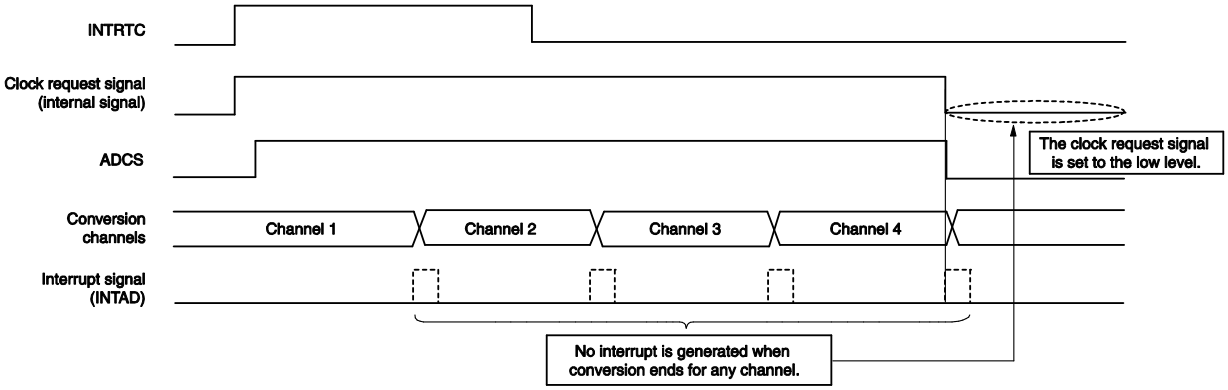

12.9 How to Read A/D Converter Characteristics Table

Here, special terms unique to the A/D converter are explained.

(1) Resolution

This is the minimum analog input voltage that can be identified. That is, the percentage of the analog input voltage per bit of digital output is called 1LSB (Least Significant Bit). The percentage of 1LSB with respect to the full scale is expressed by %FSR (Full Scale Range).

1LSB is as follows when the resolution is 10 bits.

$1LSB = 1/2^{10} = 1/1024$
$= 0.098\%FSR$

Accuracy has no relation to resolution, but is determined by overall error.

(2) Overall error

This shows the maximum error value between the actual measured value and the theoretical value.
Zero-scale error, full-scale error, integral linearity error, and differential linearity errors that are combinations of these express the overall error.
Note that the quantization error is not included in the overall error in the characteristics table.

(3) Quantization error

When analog values are converted to digital values, a ±1/2LSB error naturally occurs. In an A/D converter, an analog input voltage in a range of ±1/2LSB is converted to the same digital code, so a quantization error cannot be avoided.
Note that the quantization error is not included in the overall error, zero-scale error, full-scale error, integral linearity error, and differential linearity error in the characteristics table.

Figure 12-42. Overall Error

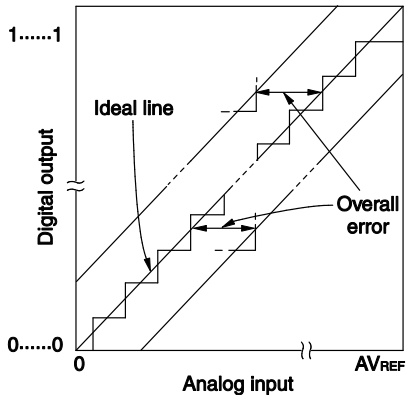

Figure 12-43. Quantization Error

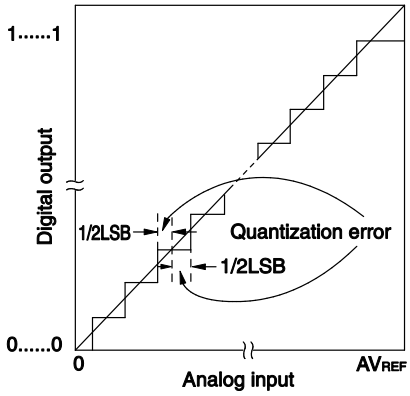

(4) Zero-scale error

This shows the difference between the actual measurement value of the analog input voltage and the theoretical value (1/2LSB) when the digital output changes from 0.....000 to 0.....001.
If the actual measurement value is greater than the theoretical value, it shows the difference between the actual measurement value of the analog input voltage and the theoretical value (3/2LSB) when the digital output changes from 0……001 to 0……010.

(5) Full-scale error

This shows the difference between the actual measurement value of the analog input voltage and the theoretical value (Full-scale – 3/2LSB) when the digital output changes from 1.....110 to 1.....111.

(6) Integral linearity error

This shows the degree to which the conversion characteristics deviate from the ideal linear relationship. It expresses the maximum value of the difference between the actual measurement value and the ideal straight line when the zero-scale error and full-scale error are 0.

(7) Differential linearity error

While the ideal width of code output is 1LSB, this indicates the difference between the actual measurement value and the ideal value.

Figure 12-44. Zero-Scale Error

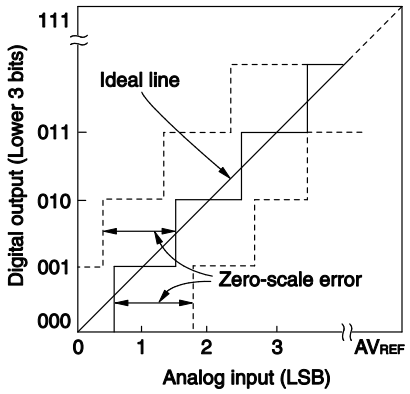

Figure 12-45. Full-Scale Error

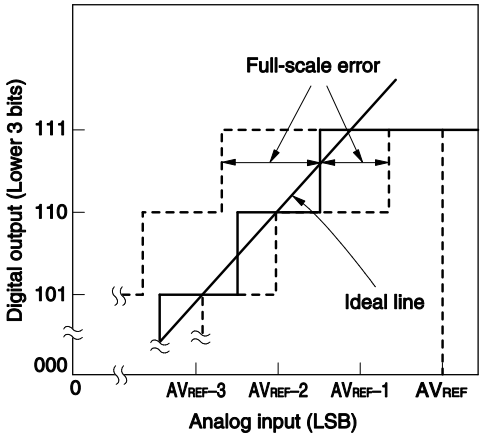

Figure 12-46. Integral Linearity Error

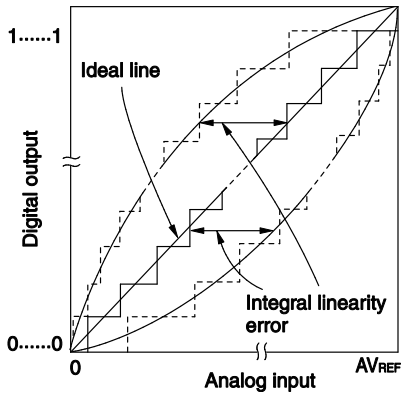

Figure 12-47. Differential Linearity Error

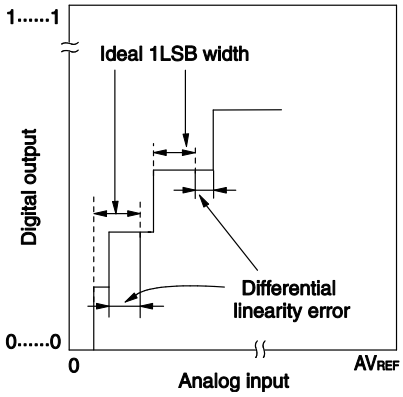

(8) Conversion time

This expresses the time from the start of sampling to when the digital output is obtained.

The sampling time is included in the conversion time in the characteristics table.

(9) Sampling time

This is the time the analog switch is turned on for the analog voltage to be sampled by the sample & hold circuit.

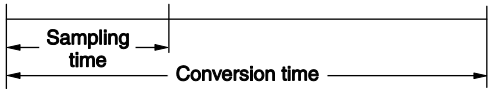

12.10 Cautions for A/D Converter

(1) Operating current in STOP mode

Shift to STOP mode after stopping the A/D converter (by setting bit 7 (ADCS) of A/D converter mode register 0 (ADM0) to 0). The operating current can be reduced by setting bit 0 (ADCE) of the ADM0 register to 0 at the same time.

To restart from the standby status, clear bit 0 (ADIF) of interrupt request flag register 1H (IF1H) to 0 and start operation.

(2) Input range of ANI0 to ANI23 and ANI24 to ANI30 pins

Observe the rated range of the ANI0 to ANI23 and ANI24 to ANI30 pins input voltage. If a voltage higher than V_{DD} and AV_{REFP} and less than V_{SS} and AV_{REFM} (even in the range of absolute maximum ratings) is input to an analog input channel, the converted value of that channel becomes undefined. In addition, the converted values of the other channels may also be affected.

When internal reference voltage (1.45 V) is selected reference voltage source for the + side of the A/D converter, do not input a voltage higher than the internal reference voltage to a pin selected by the ADS register. However, it is no problem that a voltage higher than the internal reference voltage is input to a pin not selected by the ADS register.

(3) Conflicting operations

<1> Conflict between the A/D conversion result register (ADCR, ADCRH) write and the ADCR or ADCRH register read by instruction upon the end of conversion

The ADCR or ADCRH register read has priority. After the read operation, the new conversion result is written to the ADCR or ADCRH registers.

<2> Conflict between the ADCR or ADCRH register write and the A/D converter mode register 0 (ADM0) write, the analog input channel specification register (ADS), or A/D port configuration register (ADPC) write upon the end of conversion

The ADM0, ADS, or ADPC registers write has priority. The ADCR or ADCRH register write is not performed, nor is the conversion end interrupt signal (INTAD) generated.

(4) Noise countermeasures

To maintain the 10-bit resolution, attention must be paid to noise input to the AV_{REFP}, V_{DD}, ANI0 to ANI23, and ANI24 to ANI30 pins.

<1> Connect a capacitor with a low equivalent resistance and a good frequency response to the power supply.

<2> The higher the output impedance of the analog input source, the greater the influence. To reduce the noise, connecting external C as shown in Figure 12-48 is recommended.

<3> Do not switch these pins with other pins during conversion.

<4> The accuracy is improved if the HALT mode is set immediately after the start of conversion.

Figure 12-48. Analog Input Pin Connection

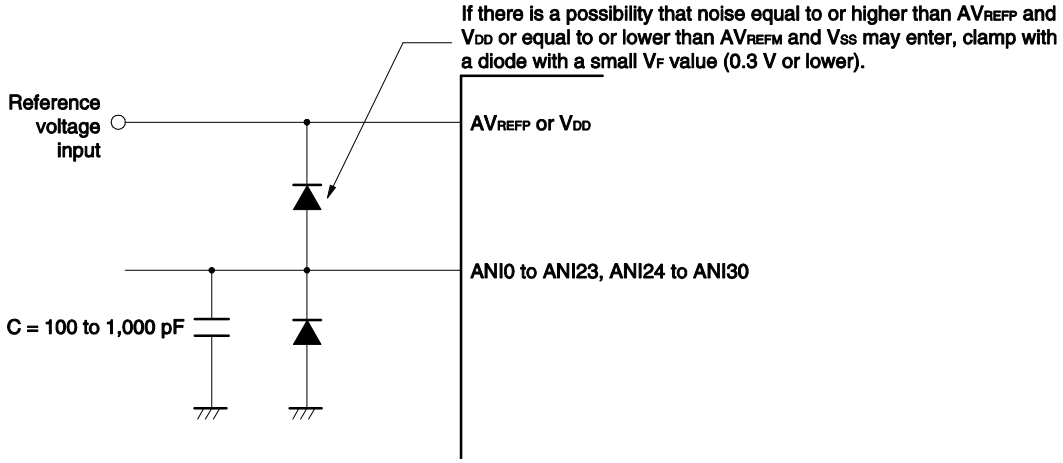

(5) Analog input (ANIn) pins

<1> The analog input pins (ANI0 to ANI23, ANI24 to ANI30) are also used as input port pins (P33, P34, P70 to P74, P80 to P87, P90 to P97, P100 to P105, P120, P125).
Do not change the output values for the port-pin functions P33, P34, P70 to P74, P80 to P87, P90 to P97, P100 to P105, P120, and P125 while A/D conversion of the signals on the ANI0 to ANI23 or ANI24 to ANI30 pins is selected and conversion is in progress, since doing so may lower the precision of the results of conversion.

<2> When a pin adjacent to one on which A/D conversion is in progress is used as a digital I/O port pin, coupling may lead to noise that causes the results of A/D conversion to differ from the expected values. Be sure to prevent the input or output of pulses on such pins while conversion is in progress.

(6) Input impedance of analog input (ANIn) pins

This A/D converter charges a sampling capacitor for sampling during sampling time.
Therefore, only a leakage current flows when sampling is not in progress, and a current that charges the capacitor flows during sampling. Consequently, the input impedance fluctuates depending on whether sampling is in progress, and on the other states.
To make sure that sampling is effective, however, it is recommended to keep the output impedance of the analog input source to within 1 kΩ, and to connect a capacitor of about 100 pF to the ANI0 to ANI23 and ANI24 to ANI30 pins (see **Figure 12-48**).

(7) Interrupt request flag (ADIF)

The interrupt request flag (ADIF) is not cleared even if the analog input channel specification register (ADS) is changed. Therefore, if an analog input pin is changed during A/D conversion, the A/D conversion result and ADIF flag for the pre-change analog input may be set just before the ADS register rewrite. Caution is therefore required since, at this time, when ADIF flag is read immediately after the ADS register rewrite, ADIF flag is set despite the fact A/D conversion for the post-change analog input has not ended.

When A/D conversion is stopped and then resumed, clear ADIF flag before the A/D conversion operation is resumed.

Figure 12-49. Timing of A/D Conversion End Interrupt Request Generation

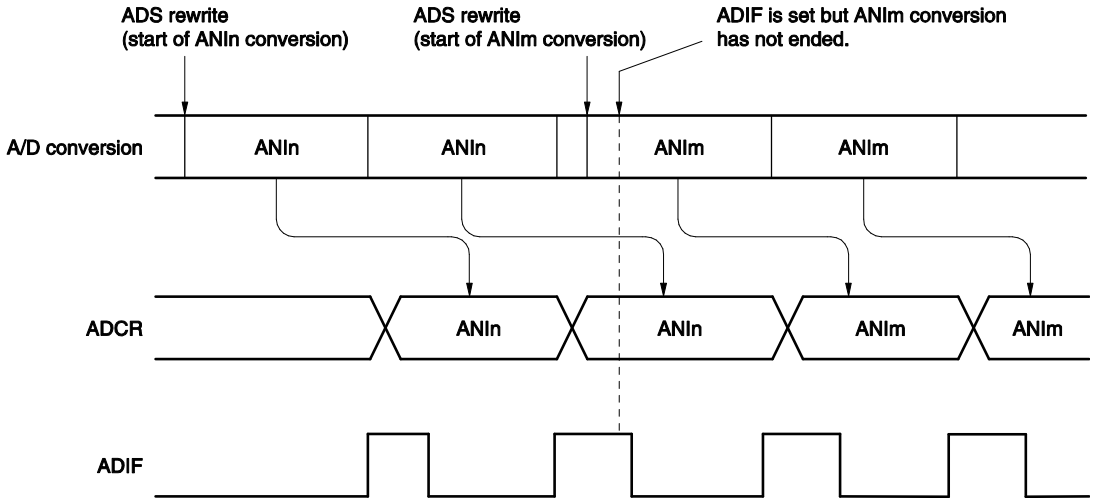

(8) Conversion results just after A/D conversion start

While in the software trigger mode or hardware trigger no-wait mode, the first A/D conversion value immediately after A/D conversion starts may not fall within the rating range if the ADCS bit is set to 1 within 1 μs after the ADCE bit was set to 1. Take measures such as polling the A/D conversion end interrupt request (INTAD) and removing the first conversion result.

(9) A/D conversion result register (ADCR, ADCRH) read operation

When a write operation is performed to A/D converter mode register 0 (ADM0), analog input channel specification register (ADS), A/D port configuration register (ADPC), and port mode control register xx (PMCxx), the contents of the ADCR and ADCRH registers may become undefined. Read the conversion result following conversion completion before writing to the ADM0, ADS, ADPC, or PMC register. Using a timing other than the above may cause an incorrect conversion result to be read.

(10) Internal equivalent circuit

The equivalent circuit of the analog input block is shown below.

Figure 12-50. Internal Equivalent Circuit of ANIn Pin

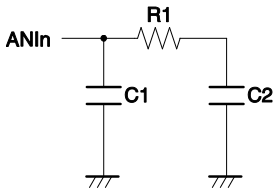

Table 12-6. Resistance and Capacitance Values of Equivalent Circuit (Reference Values)

AV_{REFP}, V_{DD}	ANIn Pins	R1 [kΩ]	C1 [pF]	C2 [pF]
3.6 V ≤ V_{DD} ≤ 5.5 V	ANI0 to ANI23	14	8	2.5
	ANI24 to ANI30	18	8	7.0
2.7 V ≤ V_{DD} < 3.6 V	ANI0 to ANI23	39	8	2.5
	ANI24 to ANI30	53	8	7.0

Remark The resistance and capacitance values shown in Table 12-6 are not guaranteed values.

(11) Starting the A/D converter

Start the A/D converter after the AV_{REFP} and V_{DD} voltages stabilize.

(12) Temperature sensor output

If the internal reference voltage (1.45 V) is selected as the reference voltage of comparator 0 or comparator 1 in RL78/F14, the temperature sensor output cannot be selected.

CHAPTER 13 D/A CONVERTER (RL78/F14 Only)

The D/A converter is an 8-bit resolution R-2R type unit used to control analog outputs.

13.1 Function of D/A Converter

The D/A converter has the following features.

- 8-bit resolution
- R-2R ladder type
- Analog output voltage
  8-bit resolution: V_{DD} × m8/256 (m8: Value set to DACS0 register)
- Operation mode
  Normal mode
  Real-time output mode

13.2 Configuration of D/A Converter

Figure 13-1 shows the block diagram of the D/A converter.

Figure 13-1. Block Diagram of D/A Converter

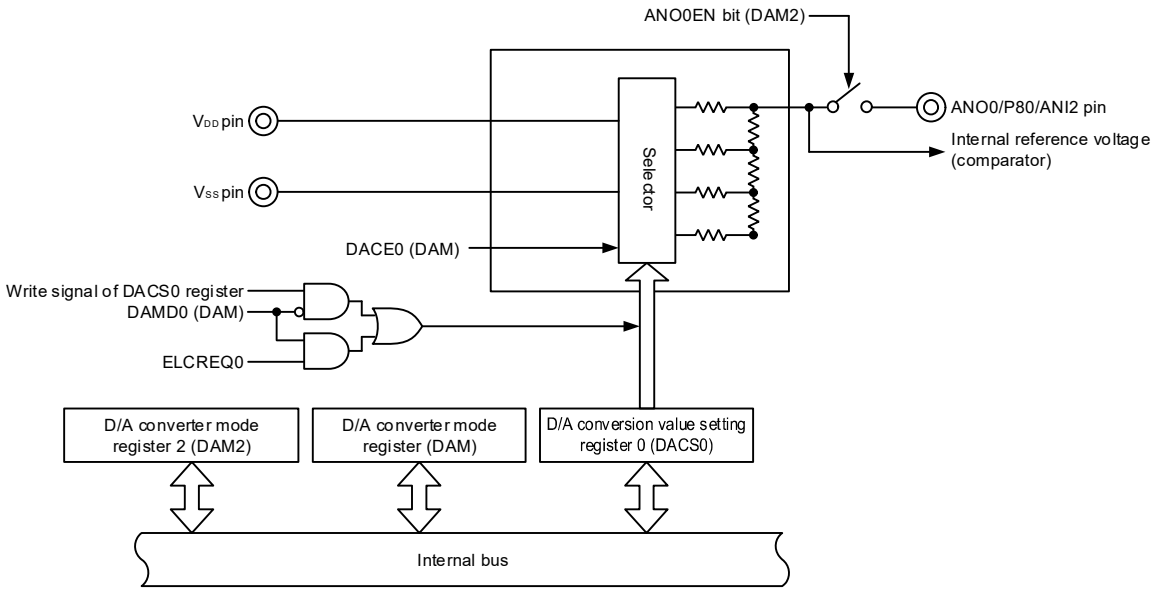

Remarks 1. ELCREQ0 is a trigger signal (request signal from the ELC) that is used in the real-time output mode.

2. The internal reference voltage (comparator) is used to select the reference voltage of the comparator. When setting bits 5 and 4 (CVRS1 and CVRS0) in the comparator I/O select register (CMPSEL) to 10B (internal reference voltage (DAC output) is selected), set the ANO0EN bit in this register to 0 (analog output is disabled).

13.3 Registers of D/A Converter

The D/A converter uses the following six registers.

- A/D port configuration register (ADPC)
- Peripheral enable register 1 (PER1)
- D/A converter mode register (DAM)
- D/A converter mode register 2 (DAM2)
- D/A conversion value setting register 0 (DACS0)
- Port mode register 8 (PM8)

13.3.1 A/D Port Configuration Register (ADPC)

This register switches the ANI0/P33 to ANI23/P105 pins to either analog input or port digital I/O.

When the D/A converter is used, this register should be used to set the ANI2/ANO0/P80 pin to analog input.

Set the ADPC register by an 8-bit memory manipulation instruction.

Reset signal generation clears this register to 00H.

Figure 13-2. Format of A/D Port Configuration Register (ADPC)

Address: F0076H After reset: 00H R/W

Symbol	7	6	5	4	3	2	1	0
ADPC	0	0	0	ADPC4	ADPC3	ADPC2	ADPC1	ADPC0

ADPC4	ADPC3	ADPC2	ADPC1	ADPC0	Switching between analog input (A) and digital input/output (D)																							
					ANI23/P105	ANI22/P104	ANI21/P103	ANI20/P102	ANI19/P101	ANI18/P100	ANI17/P97	ANI16/P96	ANI15/P95	ANI14/P94	ANI13/P93	ANI12/P92	ANI11/P91	ANI10/P90	ANI9/P87	ANI8/P86	ANI7/IVREF0/P85	ANI6/IVCMP03/P84	ANI5/IVCMP02/P83	ANI4/IVCMP01/P82	ANI3/IVCMP00/P81	ANI2/ANO0/P80	ANI1/P34	ANI0/P33
0	0	0	0	0	A	A	A	A	A	A	A	A	A	A	A	A	A	A	A	A	A	A	A	A	A	A	A	A
0	0	0	0	1	D	D	D	D	D	D	D	D	D	D	D	D	D	D	D	D	D	D	D	D	D	D	D	D
0	0	0	1	0	D	D	D	D	D	D	D	D	D	D	D	D	D	D	D	D	D	D	D	D	D	D	D	A
0	0	0	1	1	D	D	D	D	D	D	D	D	D	D	D	D	D	D	D	D	D	D	D	D	D	D	A	A
0	0	1	0	0	D	D	D	D	D	D	D	D	D	D	D	D	D	D	D	D	D	D	D	D	D	A	A	A
0	0	1	0	1	D	D	D	D	D	D	D	D	D	D	D	D	D	D	D	D	D	D	D	D	A	A	A	A
0	0	1	1	0	D	D	D	D	D	D	D	D	D	D	D	D	D	D	D	D	D	D	D	A	A	A	A	A
0	0	1	1	1	D	D	D	D	D	D	D	D	D	D	D	D	D	D	D	D	D	D	A	A	A	A	A	A
0	1	0	0	0	D	D	D	D	D	D	D	D	D	D	D	D	D	D	D	D	D	A	A	A	A	A	A	A
0	1	0	0	1	D	D	D	D	D	D	D	D	D	D	D	D	D	D	D	D	A	A	A	A	A	A	A	A
0	1	0	1	0	D	D	D	D	D	D	D	D	D	D	D	D	D	D	D	A	A	A	A	A	A	A	A	A
0	1	0	1	1	D	D	D	D	D	D	D	D	D	D	D	D	D	D	A	A	A	A	A	A	A	A	A	A
0	1	1	0	0	D	D	D	D	D	D	D	D	D	D	D	D	D	A	A	A	A	A	A	A	A	A	A	A
0	1	1	0	1	D	D	D	D	D	D	D	D	D	D	D	D	A	A	A	A	A	A	A	A	A	A	A	A
0	1	1	1	0	D	D	D	D	D	D	D	D	D	D	D	A	A	A	A	A	A	A	A	A	A	A	A	A
0	1	1	1	1	D	D	D	D	D	D	D	D	D	D	A	A	A	A	A	A	A	A	A	A	A	A	A	A
1	0	0	0	0	D	D	D	D	D	D	D	D	D	A	A	A	A	A	A	A	A	A	A	A	A	A	A	A
1	0	0	0	1	D	D	D	D	D	D	D	D	A	A	A	A	A	A	A	A	A	A	A	A	A	A	A	A
1	0	0	1	0	D	D	D	D	D	D	D	A	A	A	A	A	A	A	A	A	A	A	A	A	A	A	A	A
1	0	0	1	1	D	D	D	D	D	D	A	A	A	A	A	A	A	A	A	A	A	A	A	A	A	A	A	A
1	0	1	0	0	D	D	D	D	D	A	A	A	A	A	A	A	A	A	A	A	A	A	A	A	A	A	A	A
1	0	1	0	1	D	D	D	D	A	A	A	A	A	A	A	A	A	A	A	A	A	A	A	A	A	A	A	A
1	0	1	1	0	D	D	D	A	A	A	A	A	A	A	A	A	A	A	A	A	A	A	A	A	A	A	A	A
1	0	1	1	1	D	D	A	A	A	A	A	A	A	A	A	A	A	A	A	A	A	A	A	A	A	A	A	A
1	1	0	0	0	D	A	A	A	A	A	A	A	A	A	A	A	A	A	A	A	A	A	A	A	A	A	A	A
Other than the above					Setting prohibited																							

Cautions 1. Set a channel to be used for D/A conversion to the input mode by using port mode register 8 (PM8).

2. Do not set the pin that is set by the ADPC register as digital I/O to D/A conversion operation enable by using the D/A converter mode register (DAM).

13.3.2 Peripheral Enable Register 1 (PER1)

The PER1 register enables or disables clock supply to each peripheral hardware unit. Clock supply to a hardware unit that is not used is stopped in order to reduce the power consumption and noise.

When the D/A converter is used, be sure to set bit 7 (DACEN) of this register to 1.

Set the PER1 register by a 1-bit or 8-bit memory manipulation instruction.

Reset signal generation clears this register to 00H.

<R> **Figure 13-3. Format of Peripheral Enable Register 1 (PER1)**

Address: F02C0H After reset: 00H

Symbol	<7>	6	<5>	<4>	<3>	2	1	<0>
PER1	DACEN Note	0	CMPEN Note	TRD0EN	DTCEN	0	0	TRJ0EN

DACEN Note	Control of D/A converter input clock	R/W
0	Stops input clock supply. • SFR used by the D/A converter cannot be written to. • The D/A converter is in the reset state.	R/W
1	Supplies input clock. • SFR used by the D/A converter can be read/written to.	

Note Only for RL78/F14.

Cautions 1. When setting the D/A converter, be sure to set the DACEN bit to 1 first. If DACEN = 0, writing to a control register of the D/A converter is ignored, and all read values are default values (except for port mode register 8 (PM8), port register 8 (P8), A/D port configuration register (ADPC), and D/A converter mode register 2 (DAM2)).

2. Be sure to clear the following bits to 0.

RL78/F13: bits 1, 2, 5, 6, and 7

RL78/F14: bits 1, 2, and 6

13.3.3 D/A Converter Mode Register (DAM)

This register controls the operation of the D/A converter.

Set the DAM register by a 1-bit or 8-bit memory manipulation instruction.

Reset signal generation clears this register to 00H.

<R>

Figure 13-4. Format of D/A Converter Mode Register (DAM)

Address: FFF36H After reset: 00H

Symbol	7	6	5	<4>	3	2	1	0
DAM	0	0	0	DACE0	0	0	0	DAMD0

DACE0	D/A conversion operation control	R/W
0	Stops D/A conversion operation.	R/W
1	Enables D/A conversion operation.	

DAMD0	D/A converter operation mode selection	R/W
0	Normal mode	R/W
1	Real-time output mode	

When the D/A converter is not used, set the DACE0 bit to 0 (output disable) and set the DACS0 register to 00H to prevent current from flowing into the R-2R resistor ladder to reduce unnecessary current consumption.

13.3.4 D/A Converter Mode Register 2 (DAM2)

When the P80/ANO0 pin is in use to output analog signal from the D/A converter, this register is used to control the output from the ANO0 pin. When setting bits 5 and 4 (CVRS1 and CVRS0) in the comparator I/O select register (CMPSEL) to 10B (internal reference voltage (DAC output) is selected), set the ANO0EN bit in this register to 0 (analog output is disabled).

Set the DAM2 register by a 1-bit or 8-bit memory manipulation instruction.

Reset signal generation clears this register to 00H.

Figure 13-5. Format of D/A Converter Mode Register 2 (DAM2)

Address: F0227H After reset: 00H R/W

Symbol	7	6	5	4	3	2	1	<0>
DAM2	0	0	0	0	0	0	0	ANO0EN

ANO0EN	Analog output (ANO0) control	R/W
0	Disables analog output (ANO0).	R/W
1	Enables analog output (ANO0).	

13.3.5 D/A Conversion Value Setting Register 0 (DACS0)

This register is used to set the analog voltage value to be output to the ANO0 pin when the D/A converter is used.

Set the DACS0 register by an 8-bit memory manipulation instruction.

Reset signal generation clears this register to 00H.

Figure 13-6. Format of D/A Conversion Value Setting Register 0 (DACS0)

Address: FFF34H After reset: 00H R/W

Symbol	7	6	5	4	3	2	1	0
DACS0	DACS07	DACS06	DACS05	DACS04	DACS03	DACS02	DACS01	DACS00

Remark The analog output voltage (VANO0) of the D/A converter is defined as follows.

VANO0 = Reference voltage for D/A converter × (DACS0)/256

13.3.6 Port Mode Register 8 (PM8)

When using the ANO0/ANI2/P80 pin as an analog input port, set bit PM80 to 1.

If bit PM80 is set to 0, this pin cannot be used as an analog input port.

Set the PM8 register by a 1-bit or 8-bit memory manipulation instruction.

Reset signal generation sets this register to FFH.

Caution If a pin is set as an analog input port, not the pin level but 0 is always read.

Figure 13-7. Format of Port Mode Register 8 (PM8)

<R> Address: FFF28H After reset: FFH

Symbol	7	6	5	4	3	2	1	0
PM8	PM87	PM86	PM85	PM84	PM83	PM82	PM81	PM80

PM8n	P8n pin I/O mode selection (n = 0 to 7)	R/W
0	Output mode (output buffer on)	R/W
1	Input mode (output buffer off)	

The function of the ANO0/ANI2/P80 pin can be selected by using the A/D port configuration register (ADPC), the D/A converter mode register (DAM), D/A converter mode register 2 (DAM2), the analog input channel specification register (ADS), and the PM8 register.

Table 13-1. Setting Functions of ANO0/ANI2/P80 Pin

<R>

ADPC Register	PM8 Register	DAM Register	DAM2 Register	ADS Register	Functions of ANO0/ANI2/P80 Pin
Digital I/O	Input mode	—	Enables analog output	—	Setting prohibited
			Disables analog output		Digital input
	Output mode	—	Enables analog output	—	Setting prohibited
			Disables analog output		Digital output
Analog I/O	Input mode	Enables D/A conversion operation	Enables analog output	Selects ANI	Setting prohibited
				Does not selects ANI	Analog output (D/A conversion output)
			Disables analog output	Selects ANI	Analog input (to be converted)
				Does not selects ANI	Analog input (not to be converted) Note
		Stops D/A conversion operation	Enables analog output	Selects ANI	Setting prohibited
				Does not selects ANI	Setting prohibited
			Disables analog output	Selects ANI	Analog input (to be converted)
				Does not selects ANI	Analog input (not to be converted)
	Output mode	—	—	—	Setting prohibited

Note This is a setting that the D/A converter is used for internal reference voltage of comparator. In this case, set CVRS1, CVRS0 bits of CMPSEL register to 10b (internal reference voltage (DAC output) is selected).

13.4 Operations of D/A Converter

13.4.1 Operation in Normal Mode

D/A conversion is performed using write operation to the DACS0 register as the trigger.

The setting method is described below.

<1> Set the DACEN bit of the peripheral enable register 1 (PER1) to 1 to start the supply of the input clock to the D/A converter.

<2> Use the A/D port configuration register (ADPC) to set the ports to analog pins.

<3> Set the ANO0EN bit of the D/A converter mode register 2 (DAM2) to 1 (analog output enable). When setting bits 5 and 4 (CVRS1 and CVRS0) in the comparator I/O select register (CMPSEL) to 10B (internal reference voltage (DAC output) is selected), set the ANO0EN bit in this register to 0 (analog output is disabled).

<4> Set the DAMD0 bit of the D/A converter mode register (DAM) to 0 (normal mode).

<5> Set the analog voltage value to be output to the ANO0 pin to the D/A conversion value setting register 0 (DACS0).

Steps <1> to <5> above constitute the initial settings.

<6> Set the DACE0 bit of the DAM register to 1 (D/A conversion enable).

D/A conversion starts, and then, after the settling time elapses, the analog voltage set in step <5> is output to the ANO0 pin.

<7> To perform subsequent D/A conversions, write to the DACS0 register.

The previous D/A conversion result is held until the next D/A conversion is performed.

When the DACE0 bit of the DAM register is set to 0 (D/A conversion operation stop), D/A conversion stops.

If the ports are set to digital pins using the ADPC register, the ANO0 pin goes into a high-impedance state when the PM80 bit of the PM8 register for the port = 1 (input mode), and the ANO0 pin outputs the set value of the P8 register when the PM80 bit = 0 (output mode).

Cautions 1. Even if 1, 0, and then 1 is set to the DACE0 bit, there is a wait after 1 is set for the last time.

2. If the DACS0 register is rewritten during the settling time, D/A conversion is aborted and reconversion by using the newly written values starts.

13.4.2 Operation in Real-Time Output Mode

<R> D/A conversion is performed on using the individual interrupt request signals from the ELC as triggers.

The setting method is described below.

<1> Set the DACEN bit of the peripheral enable register 1 (PER1) to 1 to start the supply of the input clock to the D/A converter.

<2> Use the port configuration register (ADPC) to set the ports to analog pins.

<3> Set the ANO0EN bit of the D/A converter mode register 2 (DAM2) to 1 (analog output enable). When setting bits 5 and 4 (CVRS1 and CVRS0) in the comparator I/O select register (CMPSEL) to 10B (internal reference voltage (DAC output) is selected), set the ANO0EN bit in this register to 0 (analog output is disabled).

<4> Set the DAMD0 bit of the D/A converter mode register (DAM) to 0 (normal mode).

<5> Set the analog voltage value to be output to the ANO0 pin to the D/A conversion value setting register 0 (DACS0).

<6> Set the DACE0 bit of the DAM register to 1 (D/A conversion enable).

D/A conversion starts, and then, after the settling time elapses, the analog voltage set in step <5> is output to the ANO0 pin.

<7> Use the event output destination select register (ELSELRn) to set the real-time trigger signal.

<8> Set the DAMD0 bit of the DAM register to 1 (real-time output mode).

<R> <9> Start the operation of the ELC request source.

Steps <1> to <9> above constitute the initial settings.

<10>Generation of the real-time output triggers starts D/A conversion and the analog voltage set in step <5> will be output to the ANO0 pin after a settling time has elapsed.

Set the analog voltage value to be output to the ANO0 pin, to the DACS0 register before performing the next D/A conversion (real-time output trigger is generated).

When the DACE0 bit of the DAM register is set to 0 (D/A conversion operation stop), D/A conversion stops.

If the ports are set to digital pins by using the ADPC register, the ANO0 pin goes into a high-impedance state when the PM80 bit of the PM8 register for the port = 1 (input mode), and the ANO0 pin outputs the set value of the P8 register when the PM80 bit = 0 (output mode).

<R> **Cautions**

1. **Even if the DACE0 bit setting is 1 to 0 and then 1, there is a wait after 1 is set for the last time.**
2. **Make the interval between each generation of the ELC event request trigger signal longer than the settling time. If an ELC event request trigger signal is generated during the settling time, D/A conversion is aborted and reconversion starts.**
3. **Even if the generation of the ELC event request trigger signal and rewriting of the DACS0 register conflict, the correct D/A conversion result is output.**

13.5 Cautions for D/A Converter

Observe the following cautions when using the D/A converter.

(1) The digital port I/O function, which is the alternate function of the ANO0 pin, does not operate if the ports are set to analog pins by using the A/D port configuration register (ADPC). When the P8 register is read while the ports are set to analog pins by using the ADPC register, 0 is read in the input mode and the set value of the P8 register is read in the output mode. If the digital output mode is set, no data is output to the pins.

(2) The operation of the D/A converter continues in the HALT and STOP modes. To lower the power consumption, therefore, clear the DACE0 bit to 0, and execute the HALT or STOP instruction after stopping the operation of the D/A converter.

(3) To stop the real-time output mode (including when changing to normal mode), one of the following procedures must be used:

- Wait for at least three clocks after stopping the trigger output source and then set bits DACE0 and DAMD0 to 0.
- After setting bits DACE0 and DAMD0, set the DACEN bit of the PER1 register to 0 (DAC stop).
- When the DACEN bit is set to 0, all the registers in the DAC are cleared, so the settings of the SFRs are required to start the operation again.

(4) When D/A conversion operation is enabled, do not perform A/D conversions from the analog input pin multiplexed with the ANO0 pin.

(5) In the real-time output mode, set the value of the DACS0 register before a timer trigger is generated. Do not change the set value of the DACS0 register while the trigger signal is output.

(6) Since the output impedance of the D/A converter is high, no current can be taken out from the ANO0 pin. If the input impedance of the load is low, insert a follower amplifier between the load and the ANO0 pin before use. In addition, the wiring length between the follower amplifier and the load must be as short as possible due to the high output impedance. If the wiring length is long, take measures such as placing a ground pattern around the wiring area.

(7) When entering the STOP state while the real-time output mode for D/A conversion is enabled, disable linking of ELC events before entering STOP.

CHAPTER 14 COMPARATOR (RL78/F14 Only)

14.1 Overview

The comparator compares a reference voltage to an analog input voltage. The results of a comparison of reference voltage and analog input voltage can be read by software. The comparison result is output externally and an interrupt or ELC event is requested upon detection of a change between the two voltages.

The reference input voltage can be either the input from the IVREF0 pin or the output from the on-chip D/A converter. There are four analog input pins, one of which is to be selected.

Table 14-1 lists the comparator specifications and figure 14-1 shows the Comparator Block Diagram.

Table 14-1. Comparator Specifications

Item	Specification
Number of channels	One (comparator 0)
Analog input voltage	Input voltage from the IVCMP00 to IVCMP03 pins (one of them to be selected)
Reference voltage	• Internal reference voltage (output from on-chip D/A converter) • Input voltage from the external reference voltage input pin (IVREF0)
Comparator output	• Comparison result • Generation of ELC event output • Monitor output from register
Interrupt request signal	• An interrupt request is generated on detecting a valid edge of comparison result. • Rising edge, falling edge, or both edges can be selected.
Digital filter function	• One of three sampling frequencies can be selected. • Not using the filter function can be selected.

Figure 14-1. Comparator Block Diagram

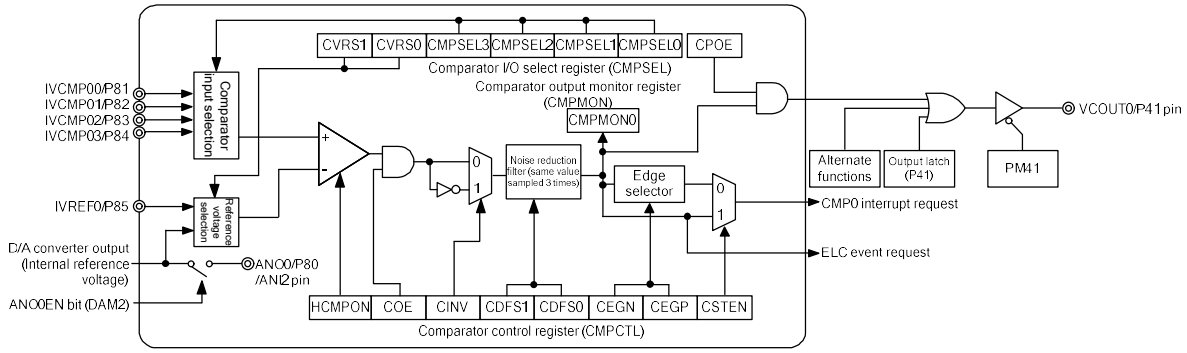

Table 14-2. Comparator Pin Configuration

Pin Name	I/O	Function
IVCMP00 to IVCMP03	Input	Analog voltage input pins
IVREF0	Input	External reference voltage input pin
VCOUT0	Output	Comparator output pin

14.2 Registers to Control the Comparator

The comparator is controlled by using the following registers.

Table 14-3. Registers to Control the Comparator

Register Name	Symbol	After Reset	Address	Access Size
<R> Peripheral Enable Register 1	PER1	00H	F02C0H	1, 8
Comparator Control Register	CMPCTL	00H	F02A0H	1, 8
Comparator I/O Select Register	CMPSEL	00H	F02A1H	1, 8
<R> Comparator Output Monitor Register	CMPMON	00H	F02A2H	1, 8
A/D port configuration register	ADPC	00H	F0076H	8
D/A converter mode register 2	DAM2	00H	F0227H	1, 8
Port mode register 4	PM4	FFH	FFF24H	1, 8
<R> Port mode register 8	PM8	FFH	FFF28H	1, 8

14.2.1 Peripheral Enable Register 1 (PER1)

The PER1 register enables or disables clock supply to each peripheral hardware unit. Clock supply to a hardware unit that is not used is stopped in order to reduce the power consumption and noise.

When the comparator is used, be sure to set bit 5 (CMPEN) of this register to 1.

The PER1 register can be set by a 1-bit or 8-bit memory manipulation instruction.

Reset signal generation clears this register to 00H.

Figure 14-2. Format of Peripheral Enable Register 1 (PER1)

Address: F007AH After reset: 00H

<R> Symbol	<7>	6	<5>	<4>	<3>	2	1	<0>
<R> PER1	DACEN Note	0	CMPEN Note	TRD0EN	DTCEN	0	0	TRJ0EN

CMPEN Note	Control of comparator input clock	R/W
0	Stops input clock supply. • SFR used by the comparator cannot be written to. • The comparator is in the reset state.	R/W
<R> 1	Enables input clock supply. • SFR used by the comparator can be read/written to.	

Note Only for the RL78/F14.

Cautions 1. When setting the comparator, be sure to set the CMPEN bit to 1 first. If CMPEN = 0, writing to a control register of the comparator is ignored, and all read values are default values (except for port mode registers 4 and 8 (PM4 and PM8), and port registers 4 and 8 (P4 and P8)).

2. Be sure to clear the following bits to 0.

RL78/F13: bits 1, 2, 5, 6, and 7

RL78/F14: bits 1, 2, and 6

14.2.2 Comparator Control Register (CMPCTL)

This register is used to control the comparator operation, enable or disable the comparator output, select the noise filter, select the valid edge of the interrupt signal, and enable/disable release from the STOP mode.

Set the CMPCTL register by a 1-bit or 8-bit memory manipulation instruction.

Reset signal generation sets this register to 00H.

<R> **Figure 14-3. Format of Comparator Control Register (CMPCTL)**

Address:F02A0H After reset: 00H

Symbol	<7>	6	5	4	3	2	<1>	0
CMPCTL	HCMPON	CDFS1	CDFS0	CEGN	CEGP	CSTEN	COE	CINV

HCMPON	Comparator operation control Note 1	R/W
0	Operation stopped (the comparator outputs a low-level signal)	R/W
1	Operation enabled (input to the comparator pins is enabled)	

CDFS1	CDFS0	Noise filter selection Notes 2, 3, 4	R/W
0	0	Noise filter not used	R/W
0	1	Noise filter sampling time is $2^3/f_{CLK}$	
1	0	Noise filter sampling time is $2^4/f_{CLK}$	
1	1	Noise filter sampling time is $2^5/f_{CLK}$	

CEGN	CEGP	Selection of valid edge of INTCMP interrupt signal	R/W
0	0	No edge selection	R/W
0	1	Rising edge selection	
1	0	Falling edge selection	
1	1	Both-edge selection	
The valid edge is set for the signal after the comparator polarity is selected by using the CINV bit and the filter is selected by using CDFS1 and CDFS0 bits.			

CSTEN	STOP mode release enable Notes 5, 6	R/W
0	Releasing STOP mode by comparator interrupt disabled	R/W
1	Releasing STOP mode by comparator interrupt enabled	

COE	Comparator output enable	R/W
0	Comparator output disabled (the output signal is low level)	R/W
1	Comparator output enabled	

CINV	Comparator output polarity selection Notes 2, 3, 6	R/W
0	Comparator output not inverted	R/W
1	Comparator output inverted	

Notes 1. Do not modify bits HCMPON and COE simultaneously. The operation stabilization wait time (1 μs when 3.3 V ≤ V_{DD} ≤ 5.5 V or 3 μs when 2.7 V ≤ V_{DD} < 3.3 V) is required after enabling comparator operation (HCMPON = 1).

2. Change bits CDFS1, CDFS0, CEGN, CEGP, CSTEN and CINV only after disabling the comparator output (COE = 0).

3. Changes to the values of the CDFS1, CDFS0, CEGN, CEGP, CSTEN, and CINV bits may lead to a comparator interrupt request, ELC event request, DTC transfer request, or setting of the INTFLG06 bit in the interrupt source determination flag register 0. Change these bits only after

setting the ELSELR19 register to 00H (no linking of the comparator output 0) and the DTCEN44 bit in the DTCEN4 register to 0 (disabling DTC activation by the comparator detection 0 signal). Also, after changing these bits, initialize the CMPIF0 bit in the interrupt request flag register and the INTFLG06 bit in the interrupt source determination flag register 0 (INTFLG0) to 0 (clearing interrupt request flags).

4. If bits CDFS1 and CDFS0 are changed from 00B (noise filter not used) to a value other than 00B (noise filter used), perform sampling four times and update the filter output, and then use the comparator interrupt request or the ELC event.

5. To enable releasing STOP mode by the comparator interrupt, set this bit to 0 and also set bits CDFS1, CDFS0, and CINV to 00B (noise filter not used).

6. To enable releasing STOP mode by the comparator interrupt and to release from STOP mode by the falling edge of the comparator output, set the CSTEN bit to 1 and CINV bit to 1 (comparator output inverted).

14.2.3 Comparator I/O Select Register (CMPSEL)

This register is used to select the comparator input, reference voltage, and to enable or disable the VCOUT0 output.

The CMPSEL register can be set by a 1-bit or 8-bit memory manipulation instruction.

Reset signal generation sets this register to 00H.

Figure 14-4. Format of Comparator I/O Select Register (CMPSEL)

<R> Address:F02A1H After reset: 00H

Symbol	7	<6>	5	4	3	2	1	0
CMPSEL	0 Note 4	CPOE	CVRS1	CVRS0	CMPSEL3	CMPSEL2	CMPSEL1	CMPSEL0

CPOE	VCOUT0 pin output enable	R/W
0	VCOUT0 pin output of the comparator is disabled (the output signal is low level).	R/W
1	VCOUT0 pin output of the comparator is enabled.	

CVRS1	CVRS0	Reference voltage selection	R/W
0	0	No reference voltage	R/W
0	1	External reference voltage (IVREF0) selected	
1	0	Internal reference voltage (D/A converter output) selected Note 1	
1	1	Setting prohibited Note 2	

CMPSEL3	CMPSEL2	CMPSEL1	CMPSEL0	Comparator input selection	R/W
0	0	0	0	No input	R/W
0	0	0	1	IVCMP00 selected	
0	0	1	0	IVCMP01 selected	
0	1	0	0	IVCMP02 selected	
1	0	0	0	IVCMP03 selected	
Setting the other values is prohibited. For details, see note 3.					

Notes 1. When the internal reference voltage is used, set the D/A converter to be used for generating the internal reference voltage before enabling comparator operation (HCMPON = 1). For details on setting the internal reference voltage, see **CHAPTER 13 D/A CONVERTER (RL78/F14 Only)**.

2. Modify bits CVRS1 and CVRS0 in the following procedure. Particularly, be sure to set bits CVRS1 and CVRS0 to 00B before changing the set value. Writing a value other than 00B while the value of these bits is not 00B is invalid and the previous value is retained.

1. Set bit COE in CMPCTL register to 0.
2. Set bits CVRS1 and CVRS0 to 00B.
3. Set a new value to bits CVRS1 and CVRS0 (with 1 set in only one of the bits).
4. Wait for the input switching stabilization wait time (300 ns)
5. Set bit COE in CMPCTL register to 1.
6. Clear flag bit CMPIF0 in the control register.

3. Modify bits CMPSEL3 to CMPSEL0 in the following procedure. Writing a value other than 0000B while the value of these bits is not 0000B is invalid. Writing 1 to two or more bits is also invalid. In both cases, the previous value is retained.

1. Set bit COE in CMPCTL register to 0.
2. Set bits CMPSEL3 to CMPSEL0 to 0000B.
3. Set a new value to bits CMPSEL3 to CMPSEL0 (with 1 set in only one of the bits).

4. Wait for the input switching stabilization wait time (300 ns)
5. Set bit COE in CMPCTL register to 1.
6. Clear flag bit CMPIF0 in the control register.

4. Be sure to set bit 7 to 0.

14.2.4 Comparator Output Monitor Register (CMPMON)

This register is used to monitor the comparator output.

<R> The CMPMON register can only be read by a 1-bit or 8-bit memory manipulation instruction.

Reset signal generation sets this register to 00H.

Figure 14-5. Format of Comparator Output Monitor Register (CMPMON)

Address: F02A2H After reset: 00H

Symbol	7	6	5	4	3	2	1	0
CMPMON	0	0	0	0	0	0	0	CMPMON0

<R>

CMPMON0	Comparator output monitor value	R/W
0	When CINV = 0 (comparator output is not inverted) • Comparator input voltage (IVCMP0n) < reference voltage • Comparator operation disabled (HCMPON = 0) • Comparator output is disabled (COE = 0) When CINV = 1 (converter output is inverted) • Comparator input voltage (IVCMP0n) > reference voltage	R
1	When CINV = 0 (comparator output is not inverted) • Comparator input voltage (IVCMP0n) > reference voltage When CINV = 1 (comparator output is inverted) • Comparator input voltage (IVCMP0n) < reference voltage • Comparator operation disabled (HCMPON = 0) • Comparator output is disabled (COE = 0)	

Cautions 1. When comparator operation is enabled (HCMPON = COE = 1) but the noise filter is not in use (CDFS1 and CDFS0 = 00B), write the software so that the CMPMON0 bit is read twice and the values are only used after the two consecutive values match.

2. Be sure to set bits 7 to 1 to 0.

14.2.5 A/D port configuration register (ADPC)

This register switches the ANI0/P33 to ANI23/P105 pins to digital I/O of port or analog input.

When the comparator is in use, set the pins selected from among P81/ANI3/IVCMP00, P82/ANI4/IVCMP01, P83/ANI5/IVCMP02, P84/ANI6/IVCMP03, and P85/ANI7/IVREF0 to analog input by using the ADPC register.

The ADPC register can be set by an 8-bit memory manipulation instruction.

Reset signal generation sets this register to 00H.

Figure 14-6. Format of A/D Port Configuration Register (ADPC)

Address: F0076H After reset: 00H

Symbol	7	6	5	4	3	2	1	0
ADPC	0	0	0	ADPC4	ADPC3	ADPC2	ADPC1	ADPC0

ADPC4	ADPC3	ADPC2	ADPC1	ADPC0	Analog input (A)/digital I/O (D) switching																							
					ANI23/P105	ANI22/P104	ANI21/P103	ANI20/P102	ANI19/P101	ANI18/P100	ANI17/P97	ANI16/P96	ANI15/P95	ANI14/P94	ANI13/P93	ANI12/P92	ANI11/P91	ANI10/P90	ANI9/P87	ANI8/P86	ANI7/IVREF0/P85	ANI6/IVCMP03/P84	ANI5/IVCMP02/P83	ANI4/IVCMP01/P82	ANI3/IVCMP00/P81	ANI2/ANO0/P80	ANI1/P34	ANI0/P33
0	0	0	0	0	A	A	A	A	A	A	A	A	A	A	A	A	A	A	A	A	A	A	A	A	A	A	A	A
0	0	0	0	1	D	D	D	D	D	D	D	D	D	D	D	D	D	D	D	D	D	D	D	D	D	D	D	D
0	0	0	1	0	D	D	D	D	D	D	D	D	D	D	D	D	D	D	D	D	D	D	D	D	D	D	D	A
0	0	0	1	1	D	D	D	D	D	D	D	D	D	D	D	D	D	D	D	D	D	D	D	D	D	D	A	A
0	0	1	0	0	D	D	D	D	D	D	D	D	D	D	D	D	D	D	D	D	D	D	D	D	D	A	A	A
0	0	1	0	1	D	D	D	D	D	D	D	D	D	D	D	D	D	D	D	D	D	D	D	D	A	A	A	A
0	0	1	1	0	D	D	D	D	D	D	D	D	D	D	D	D	D	D	D	D	D	D	D	A	A	A	A	A
0	0	1	1	1	D	D	D	D	D	D	D	D	D	D	D	D	D	D	D	D	D	D	A	A	A	A	A	A
0	1	0	0	0	D	D	D	D	D	D	D	D	D	D	D	D	D	D	D	D	D	A	A	A	A	A	A	A
0	1	0	0	1	D	D	D	D	D	D	D	D	D	D	D	D	D	D	D	D	A	A	A	A	A	A	A	A
0	1	0	1	0	D	D	D	D	D	D	D	D	D	D	D	D	D	D	D	A	A	A	A	A	A	A	A	A
0	1	0	1	1	D	D	D	D	D	D	D	D	D	D	D	D	D	D	A	A	A	A	A	A	A	A	A	A
0	1	1	0	0	D	D	D	D	D	D	D	D	D	D	D	D	D	A	A	A	A	A	A	A	A	A	A	A
0	1	1	0	1	D	D	D	D	D	D	D	D	D	D	D	D	A	A	A	A	A	A	A	A	A	A	A	A
0	1	1	1	0	D	D	D	D	D	D	D	D	D	D	D	A	A	A	A	A	A	A	A	A	A	A	A	A
0	1	1	1	1	D	D	D	D	D	D	D	D	D	D	A	A	A	A	A	A	A	A	A	A	A	A	A	A
1	0	0	0	0	D	D	D	D	D	D	D	D	D	A	A	A	A	A	A	A	A	A	A	A	A	A	A	A
1	0	0	0	1	D	D	D	D	D	D	D	D	A	A	A	A	A	A	A	A	A	A	A	A	A	A	A	A
1	0	0	1	0	D	D	D	D	D	D	D	A	A	A	A	A	A	A	A	A	A	A	A	A	A	A	A	A
1	0	0	1	1	D	D	D	D	D	D	A	A	A	A	A	A	A	A	A	A	A	A	A	A	A	A	A	A
1	0	1	0	0	D	D	D	D	D	A	A	A	A	A	A	A	A	A	A	A	A	A	A	A	A	A	A	A
1	0	1	0	1	D	D	D	D	A	A	A	A	A	A	A	A	A	A	A	A	A	A	A	A	A	A	A	A
1	0	1	1	0	D	D	D	A	A	A	A	A	A	A	A	A	A	A	A	A	A	A	A	A	A	A	A	A
1	0	1	1	1	D	D	A	A	A	A	A	A	A	A	A	A	A	A	A	A	A	A	A	A	A	A	A	A
1	1	0	0	0	D	A	A	A	A	A	A	A	A	A	A	A	A	A	A	A	A	A	A	A	A	A	A	A
Other than above					Setting prohibited																							

Caution Set the pins to be used for the comparator (P81/ANI3/IVCMP00, P82/ANI4/IVCMP01, P83/ANI5/IVCMP02, P84/ANI6/IVCMP03, and P85/ANI7/IVREF0) to the input mode by using port mode registers 8 (PM8).

14.2.6 D/A converter mode register 2 (DAM2)

When the P80/ANO0 pin is in use to output analog signal from the D/A converter, this register is used to control the output from the ANO0 pin. When setting bits 5 and 4 (CVRS1 and CVRS0) in the comparator I/O select register (CMPSEL) to 10B (internal reference voltage (DAC output) is selected), set the ANO0EN bit in this register to 0 (analog output is disabled).

The DAM2 register can be set by a 1-bit or 8-bit memory manipulation instruction.

Reset signal generation sets this register to 00H.

<R> **Figure 14-7. Format of D/A Converter Mode Register 2 (DAM2)**

Address: F0227H After reset: 00H

Symbol	7	6	5	4	3	2	1	<0>
DAM2	0	0	0	0	0	0	0	ANO0EN

ANO0EN	Analog output (ANO0) control	R/W
0	Analog output (ANO0) is disabled.	R/W
1	Analog output (ANO0) is enabled.	

14.2.7 Port mode register 4 (PM4)

This register is used to set input/output of port 4 in 1-bit units.

<R> When using the port (P41/VCOUT0) to be shared with the comparator output pin, set the corresponding bit in the port mode register 4 (PM4) and port register 4 (P4) to 0.

Example)
When P41/VCOUT0 is used for comparator output pin
Set the PM41 bit in the port mode register 4 to 0.
Set the P41 bit in the port register 4 to 0.

The PM4 register can be set by a 1-bit or 8-bit memory manipulation instruction.

<R> Reset signal generation sets this register to FFH.

<R> **Figure 14-8. Format of Port Mode Register 4 (PM4)**

Address: FFF24H After reset: FFH

Symbol	7	6	5	4	3	2	1	0
PM4	PM47	PM46	PM45	PM44	PM43	PM42	PM41	PM40

PM4n	P4n pin input/output mode selection (n = 0 to 7)	R/W
<R> 0	Output mode (output buffer on)	R/W
<R> 1	Input mode (output buffer off)	

14.2.8 Port mode register (PM8)

<R> When using the P81/ANI3/IVCMP00, P82/ANI4/IVCMP01, P83/ANI5/IVCMP02, P84/ANI6/IVCMP03, or P85/ANI7/IVREF0 pin for an analog input port of the comparator, set the PM81 to PM85 bits to 1 corresponding to the port to be used.

If the PM81 to PM85 bits are set to 0, they cannot be used as analog input port pins.

The PM8 register can be set by a 1-bit or 8-bit memory manipulation instruction.

<R> Reset signal generation sets this register to FFH.

Caution If a pin is set as an analog input port, not the pin level but "0" is always read.

Figure 14-9. Format of Port Mode Register 8 (PM8)

Address: FFF28H After reset: FFH

Symbol	7	6	5	4	3	2	1	0
PM8	PM87	PM86	PM85	PM84	PM83	PM82	PM81	PM80

PM8n	P8n pin input/output mode selection (n = 0 to 7)	R/W
<R> 0	Output mode (output buffer on)	R/W
<R> 1	Input mode (output buffer off)	

The P81/ANI3/IVCMP00, P82/ANI4/IVCMP01, P83/ANI5/IVCMP02, P84/ANI6/IVCMP03, and P85/ANI7/IVREF0 pins are as shown below depending on the settings of the A/D port configuration register (ADPC), analog input channel specification register (ADS), and PM8 registers.

Table 14-4. Setting Functions of P81/ANI3/IVCMP00 to P85/ANI7/IVREF0 Pins

ADPC Register	PM8 Register	ADS Register	P81/ANI3/IVCMP00 to P85/ANI7/IVREF0
Digital I/O selection	Input mode	–	Digital input
	Output mode	–	Digital output
Analog I/O selection	Input mode	Selects ANI.	Analog input (to be converted)
		Does not select ANI.	Analog input (not to be converted)
	Output mode	Selects ANI.	Setting prohibited
		Does not select ANI.	

Reset signal generation sets all the P81/ANI3/IVCMP00 to P85/ANI7/IVREF0 pins to analog input.

14.3 Operation

Figure 14-10 shows a comparator operation example. The VCOUT0 output becomes 1 when the analog input voltage is higher than the comparator input voltage, and the VCOUT0 output becomes 0 when the analog input voltage is lower than the reference voltage. When the comparator output changes, an interrupt request and an ELC event are output.

Figure 14-10. Comparator Operation Example

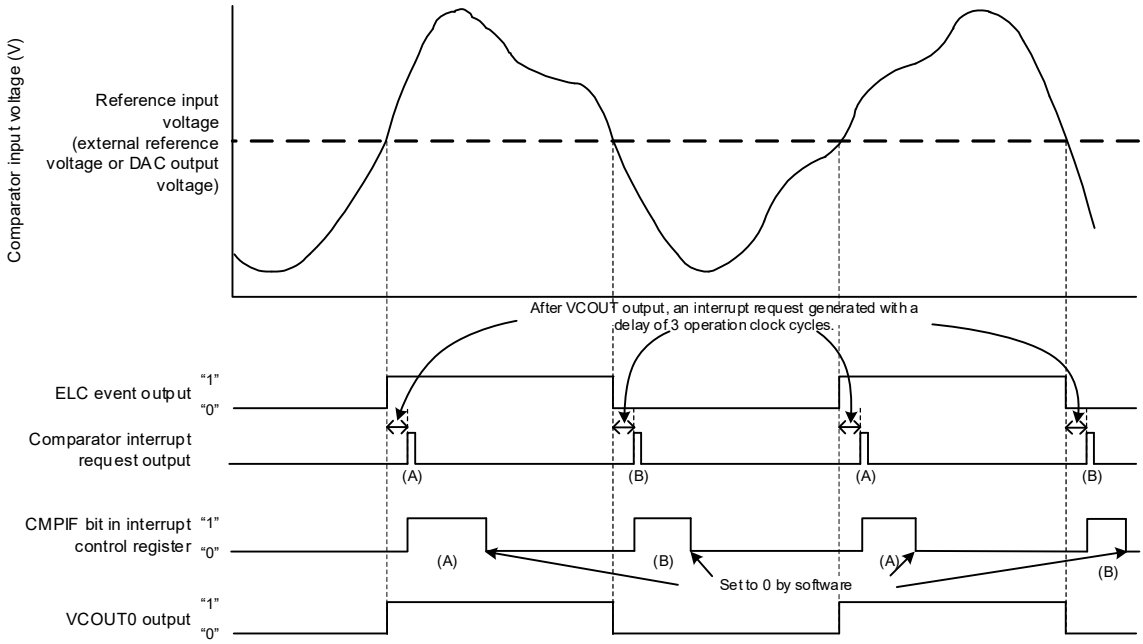

Caution The above diagram applies when CPOE = 1 (pin output enabled), CDFS1 and CDFS0 = 00B (filter not used), and CEGP = CEGN = 1 (both-edge selection). When CINV = 0, CEGP = 1, and CEGN = 0 (rising-edge selection for non-inversion output signal from the comparator), CMPIF0 changes as shown by (A) only. When CINV = 0, CEGP = 0, and CEGN = 1 (falling-edge selection for non-inversion output signal from the comparator), CMPIF0 changes as shown by (B) only. When CPOE = 1, VCOUT0 directly outputs the ELC event output.

14.3.1 Noise Filter

The comparator contains a noise filter. The sampling clock can be selected by bits CDFS1 and CDFS0 in the CMPCTL register.

The comparator signal is sampled every sampling clock and if the same value is sampled three times, the noise filter output at the next sampling clock cycle is used as the comparator output.

Figure 14-11 shows the configuration of the noise filter and edge detector and figure 14-12 shows an example of noise filter and interrupt operation.

Figure 14-11. Noise Filter and Edge Detection Configuration

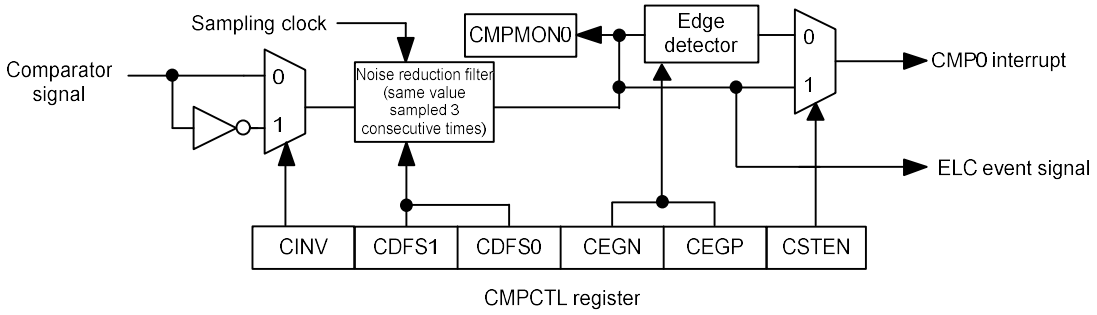

Figure 14-12. Noise Filter and Interrupt Operation Example

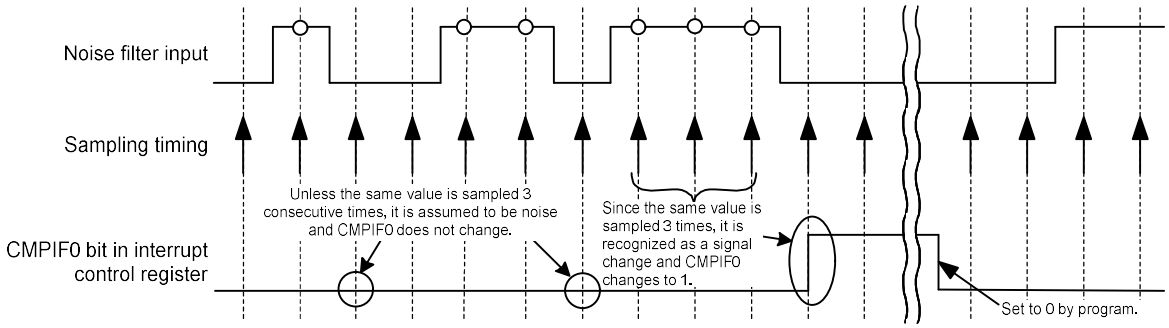

Caution The above operation example applies when bits CDFS1 and CDFS0 in the CMPCTL register is 01B, 10B, or 11B (noise filter used).

14.3.2 Comparator Interrupts

The comparator generates an interrupt request. The comparator interrupt functions provide priority specification flag, interrupt mask flag, interrupt request flag, and interrupt vector.

When using the comparator interrupt, set at least one of bits CEGP and CEGN in the CMPCTL register to 1 (to a value other than 00B (no edge selection)).

For details on the register setting related to comparator interrupt request, refer to **14.2.2 Comparator Control Register (CMPCTL)**.

To use the comparator interrupt in STOP mode, set the CSTEN bit in CMPCTL register to 1 (releasing STOP mode by comparator interrupt enabled) and set the CDFS1 and CDFS0 bits to 00 (digital noise filter not used).

14.3.3 Comparator ELC Event Output

<R> An ELC event is generated in accord to settings of the comparator output inversion control (CINV bit) and noise filter output (CDFS1 and CDFS0 bits) in the CMPCTL register. Use the ELSELR19 register of the ELC for selection of event output destination and disabling the event link operation.

14.3.4 Comparator Pin Output

The comparison result from the comparator can be output to external pins. Bits CINV and CPOE in the CMPSEL register can be used to set the output polarity (output is inverted or not) and to enable or disable the output. For the correspondence between the register setting and the comparator pin output, refer to **14.2.2 Comparator Control Register (CMPCTL)**.

14.3.5 Stopping or Supplying Comparator Clock

To stop the comparator by setting peripheral enable register 1 (PER1), use the following procedure:

<1> Set the HCMPON bit in the CMPCTL register to 0 (stop the comparator input).
<2> Set the CMPEN bit in the PER1 register to 0.
<3> Set the interrupt flag (CMPIF0 bit in the IF0L register) to 0 (clear any unnecessary interrupt before stopping the comparator).

<R> When the clock is stopped by setting PER1, all the internal registers in the comparator are initialized. To use the comparator again, follow the procedure in figure 14-13 to set the registers.

14.3.6 Comparator Setting Flowchart

Figure 14-13 shows the flowchart for setting the comparator-related registers.

Figure 14-13. Comparator Operation Setting Flowchart (when Using the timer RD Operation Triggered by Internal Reference Voltage (D/A Converter Output), INTCMP0 Interrupt, or ELC Event)

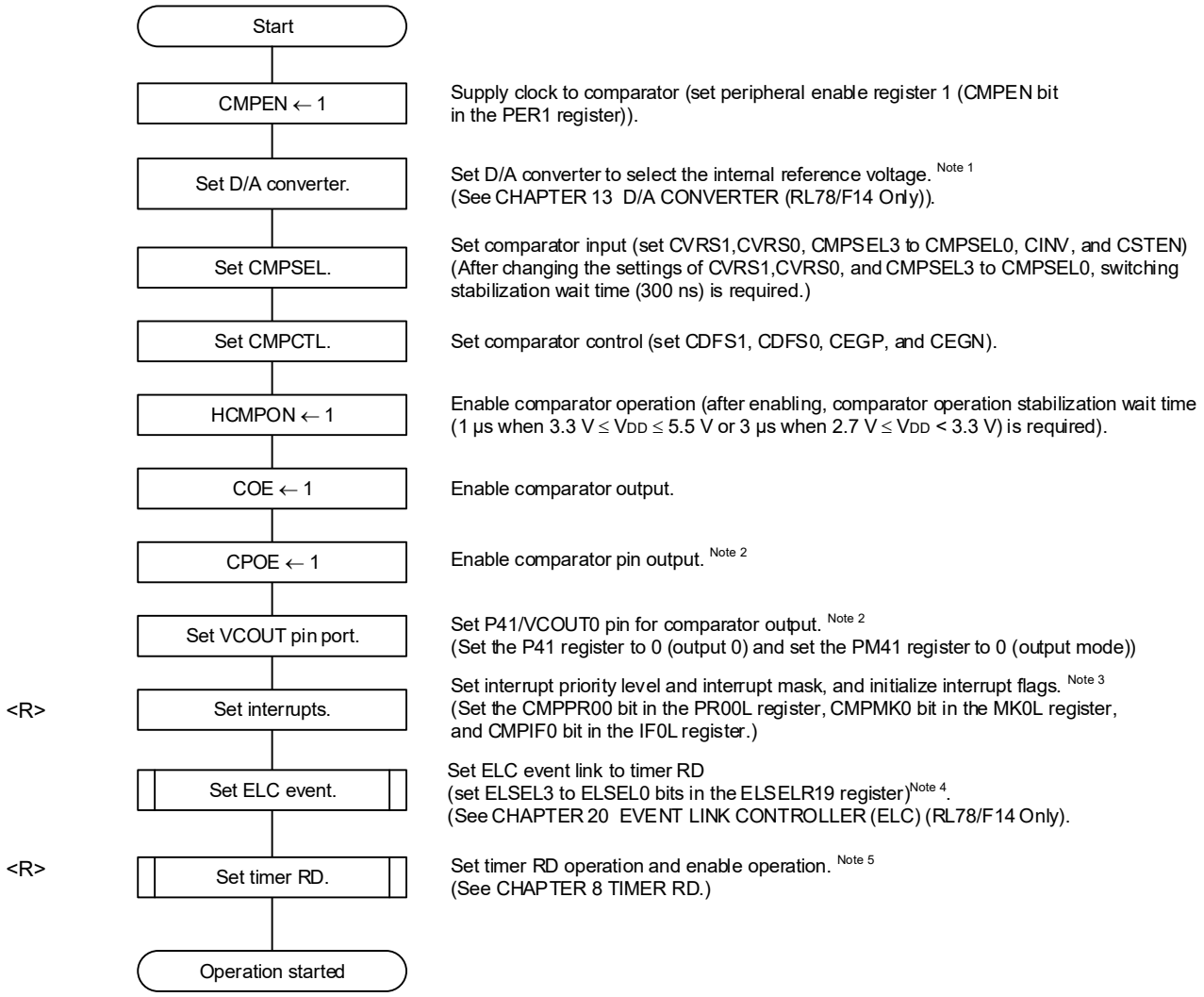

Notes 1. This is not required when the external reference voltage is used.

2. This is not required when the comparator output is not output to the external pin.

3. Set the registers assigned to interrupt control.

4. This is not required when the ELC event is not used.

5. This is not required when the timer RD by the ELC event is not used.

Figure 14-14. Comparator Operation Termination Flowchart (when Using the Timer RD Operation by the ELC Event)

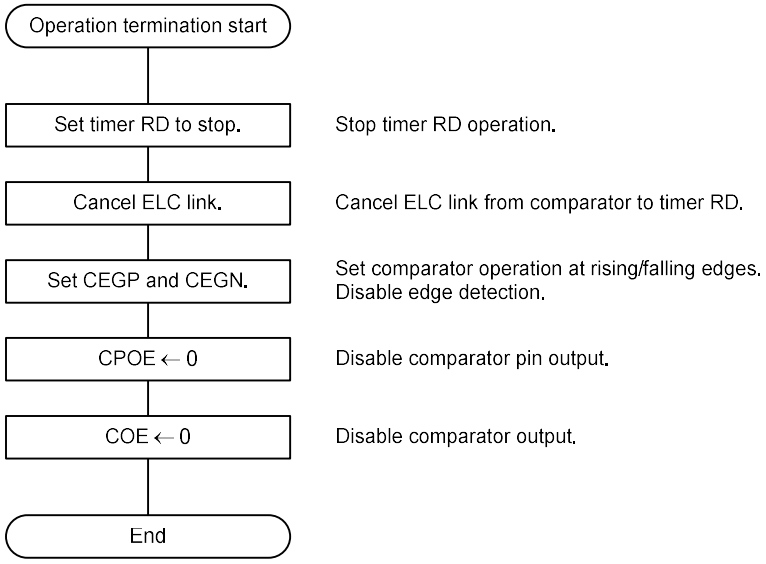

CHAPTER 15 SERIAL ARRAY UNIT

Serial array unit has two serial channels. Each channel can achieve 3-wire serial (CSI), UART, and simplified I^{2}C communication.

Function assignment of each channel supported by the RL78/F13 and RL78/F14 is as shown below.

- Group A products

Unit	Channel	Used as CSI	Used as UART	Used as Simplified I^{2}C
0	0	CSI00 (supporting SPI function) Note 2	UART0 (supporting LIN-bus)	IIC00
	1	CSI01 (supporting SPI function) Note 2		IIC01

- Products of Groups C-1 and D-1

Unit	Channel	Used as CSI	Used as UART	Used as Simplified I^{2}C
0	0	CSI00 (supporting SPI function) Note 2	UART0 (supporting LIN-bus)	IIC00
	1	CSI01(supporting SPI function) Note 2		IIC01
1	0	CSI10 (supporting SPI function)Note 1, 2	UART1	IIC10
	1	-		-

- Products of Groups B, C-2, D-2, and E

Unit	Channel	Used as CSI	Used as UART	Used as Simplified I^{2}C
0	0	CSI00 (supporting SPI function) Note 2	UART0 (supporting LIN-bus)	IIC00
	1	CSI01(supporting SPI function) Note 2		IIC01
1	0	CSI10(supporting SPI function)Note 1, 2	UART1	IIC10
	1	CSI11 (supporting SPI function) Note 2		IIC11

Notes 1. 48-pin, 32-pin and 30-pin products do not have $\overline{\text{SSI10}}$ pin.

2. Set CKPmn bit of SCRmn register to 1, when SSEmn = 1 (Enables $\overline{\text{SSImn}}$ pin input).
(m = 0, 1, n = 0, 1)

When “UART0” is used for channels 0 and 1 of the unit 0, CSI00 and CSI01 cannot be used.

Caution Most of the following descriptions in this chapter use the units and channels of the 80-pin products of RL78/F13 (CAN and LIN incorporated) as an example.

Remark Group A: RL78/F13 (LIN incorporated) products with 20, 30, 32, 48, or 64 pins and 16 Kbytes to 64 Kbytes of code flash memory
Group B: RL78/F13 (LIN incorporated) products with 48 or 64 pins and 96 Kbytes to 128 Kbytes of code flash memory or with 80 pins and 64 Kbytes to 128 Kbytes of code flash memory
Group C-1: RL78/F13 (CAN and LIN incorporated) products with 30 or 32 pins
Group C-2: RL78/F13 (CAN and LIN incorporated) products with 48, 64, or 80 pins
Group D-1: RL78/F14 products with 30 or 32 pins
Group D-2: RL78/F14 products with 48, 64, or 80 pins and 48 Kbytes to 96 Kbytes of code flash memory
Group E: RL78/F14 products with 48, 64, or 80 pins and 128 Kbytes to 256 Kbytes of code flash memory or with 100 pins and 64 Kbytes to 256 Kbytes of code flash memory

15.1 Functions of Serial Array Unit

Each serial interface supported by the RL78/F13 and RL78/F14 has the following features.

15.1.1 3-wire serial I/O (CSI00, CSI01, CSI10, CSI11)

Data is transmitted or received in synchronization with the serial clock ($\overline{SCK}$) output from the master channel.

3-wire serial communication is clocked communication performed by using three communication lines: one for the serial clock ($\overline{SCK}$), one for transmitting serial data (SO), one for receiving serial data (SI).

For details about the settings, see **15.5 Operation of 3-Wire Serial I/O (CSI00, CSI01, CSI10, CSI11) Communication.**

[Data transmission/reception]

- Data length of 7 to 16 bits
- Phase control of transmit/receive data
- MSB/LSB first selectable
- Level setting of transmit/receive data

[Clock control]

- Master/slave selection
- Phase control of I/O clock
- Setting of transfer period by prescaler and internal counter of each channel
- Maximum transfer rate

  During master communication: Max. $f_{MCK}/4$ **Note**

  During slave communication: Max. $f_{MCK}/6$ **Note**

[Interrupt function]

- Transfer end interrupt/buffer empty interrupt

[Error detection flag]

- Overrun error

CSI00, CSI01, CSI10, and CSI11 support the SPI function.

[Extended function]

- Slave select function of the SPI function

Note Use the clocks within a range satisfying the $\overline{SCK}$ cycle time (t_{KCY}) characteristics (see **CHAPTER 34** to **CHAPTER 36 ELECTRICAL SPECIFICATIONS**).

15.1.2 UART (UART0, UART1)

This is a start-stop synchronization function using two lines: serial data transmission (TxD) and serial data reception (RxD) lines. By using these two communication lines, each data frame, which consist of a start bit, data, parity bit, and stop bit, is transferred asynchronously (using the internal baud rate) between the microcontroller and the other communication party. Full-duplex UART communication can be performed by using a channel dedicated to transmission (even-numbered channel) and a channel dedicated to reception (odd-numbered channel). The LIN-bus can be implemented by using timer array unit with an external interrupt (INTP0).

For details about the settings, see **15.7 Operation of UART (UART0, UART1) Communication.**

[Data transmission/reception]

- Data length of 7, 8, 9, 16 bits
- Select the MSB/LSB first
- Level setting of transmit/receive data and select of reverse
- Parity bit appending and parity check functions
- Stop bit appending

[Interrupt function]

- Transfer end interrupt/buffer empty interrupt

[Error detection flag]

- Framing error, parity error, or overrun error

The LIN-bus is accepted in UART0 (0 and 1 channels of unit 0).

[LIN-bus functions]

- Wakeup signal detection
- Break field (BF) detection
- Sync field measurement, baud rate calculation

} Using the external interrupt (INTP0) and timer array unit

15.1.3 Simplified I²C (IIC00, IIC01, IIC10, IIC11)

This is a clocked communication function to communicate with two or more devices by using two lines: serial clock (SCL) and serial data (SDA). This simplified I²C is designed for single communication with a device such as EEPROM, flash memory, or A/D converter, and therefore, it functions only as a master.

Make sure by using software, as well as operating the control registers, that the AC specifications of the start and stop conditions are observed.

For details about the settings, see **15.9 Operation of Simplified I²C (IIC00, IIC01, IIC10, IIC11) Communication.**

[Data transmission/reception]

- Master transmission, master reception (only master function with a single master)
- ACK output function[Note] and ACK detection function
- Data length of 8 bits (When an address is transmitted, the address is specified by the higher 7 bits, and the least significant bit is used for R/W control.)
- Manual generation of start condition and stop condition

[Interrupt function]

- Transfer end interrupt

[Error detection flag]

- ACK error, or overrun error

* [Functions not supported by simplified I²C]

- Slave transmission, slave reception
- Arbitration loss detection function
- Wait detection functions

Note When receiving the last data, ACK will not be output if 0 is written to the SOEmn bit (serial output enable register m (SOEm)) and serial communication data output is stopped. See **15.9.3 (2) Processing flow** for details.

Remarks 1. To use an I²C bus of full function, see **CHAPTER 16 SERIAL INTERFACE IICA**.

2. m: Unit number (m = 0, 1), n: Channel number (n = 0, 1)

15.2 Configuration of Serial Array Unit

The serial array unit includes the following hardware.

Table 15-1. Configuration of Serial Array Unit

Item	Configuration
Shift register	16 bits
Buffer register	Serial data register mn (SDRmn)[Note]
Serial clock I/O	$\overline{\text{SCK00}}$, $\overline{\text{SCK01}}$, $\overline{\text{SCK10}}$, $\overline{\text{SCK11}}$ pins (for 3-wire serial I/O), SCL00, SCL01, SCL10, SCL11 pins (for simplified I^2C)
Serial data input	SI00, SI01, SI10, SI11 pins (for 3-wire serial I/O), RxD0 pin (for UART supporting LIN-bus), RxD1 pin (for UART)
Serial data output	SO00, SO01, SO10, SO11 pins (for 3-wire serial I/O), TxD0 pin (for UART supporting LIN-bus), TxD1 pin (for UART), output controller
Serial data I/O	SDA00, SDA01, SDA10, SDA11 pins (for simplified I^2C)
<R> Slave select input	$\overline{\text{SSI00}}$, $\overline{\text{SSI01}}$, $\overline{\text{SSI10}}$, $\overline{\text{SSI11}}$ pins (for 3-wire serial I/O)
Control registers	<Registers of unit setting block> • Peripheral enable register 0 (PER0) • Serial clock select register m (SPSm) • Serial channel enable status register m (SEm) • Serial channel start register m (SSm) • Serial channel stop register m (STm) • Serial output enable register m (SOEm) • Serial output register m (SOm) • Serial output level register m (SOLm) • Serial slave select enable register m (SSEm) • Input switch control register (ISC) • Noise filter enable register 0 (NFEN0)
	<Registers of each channel> • Serial data register mn (SDRmn) • Serial mode register mn (SMRmn) • Serial communication operation setting register mn (SCRmn) • Serial status register mn (SSRmn) • Serial flag clear trigger register mn (SIRmn)
	• Port input mode registers 1, 3, 5 to 7, 12 (PIM1, PIM3, PIM5 to PIM7, PIM12) • Port output mode registers 1, 6, 7, 12 (POM1, POM6, POM7, POM12) • Port mode registers 1, 3 to 7, 12 (PM1, PM3 to PM7, PM12) • Port registers 1, 3 to 7, 12 (P1, P3 to P7, P12)

(**Notes** and **Remark** are listed on the next page.)

Note When SEmn is 1, the lower 8 bits of serial data register mn (SDRmn) can be read or written as the following SFR, depending on the communication mode.

- CSIp communication … SDR_pL (CSIp data register)
- UARTq reception … SDRmnL (UARTq receive data register)
- UARTq transmission … SDRmnL (UARTq transmit data register)
- IICr communication … SDRrL (IICr data register)

Remark m: Unit number (m = 0, 1), n: Channel number (n = 0, 1), p: CSI number (p = 00, 01, 10, 11), q: UART number (q = 0, 1), r: IIC number (r = 00, 01, 10, 11)

Figure 15-1 shows the block diagram of the serial array unit 0.

<R> **Figure 15-1. Block Diagram of Serial Array Unit 0**

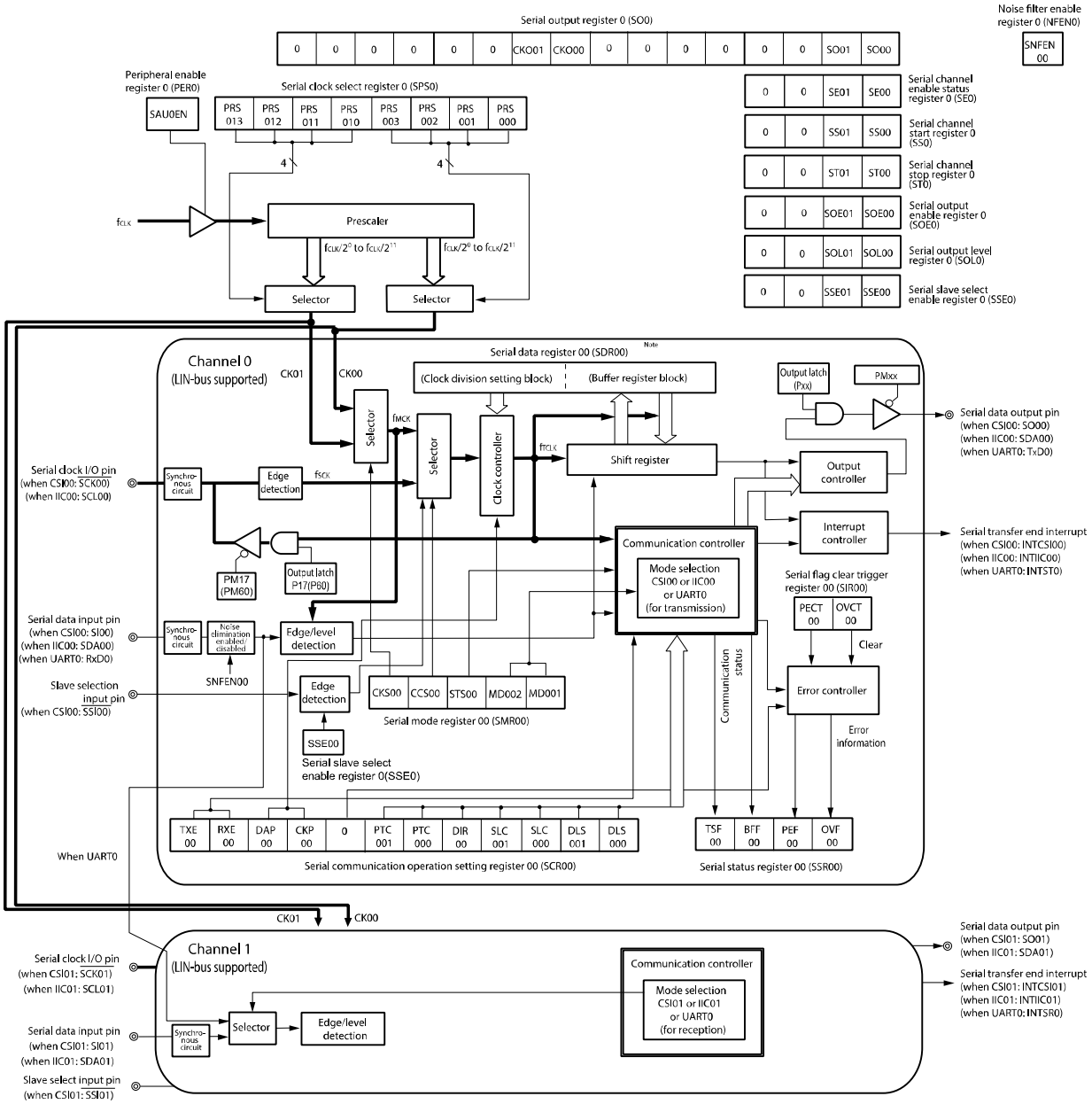

Caution: If operation is stopped (SEmn = 0), the upper 7 bits set the clock division, and the lower bits have no meaning.

<R> **If operation is in progress (SEmn = 1), the serial data register 00 functions as the buffer register.**

Figure 15-2 shows the block diagram of the serial array unit 1.

<R> **Figure 15-2. Block Diagram of Serial Array Unit 1**

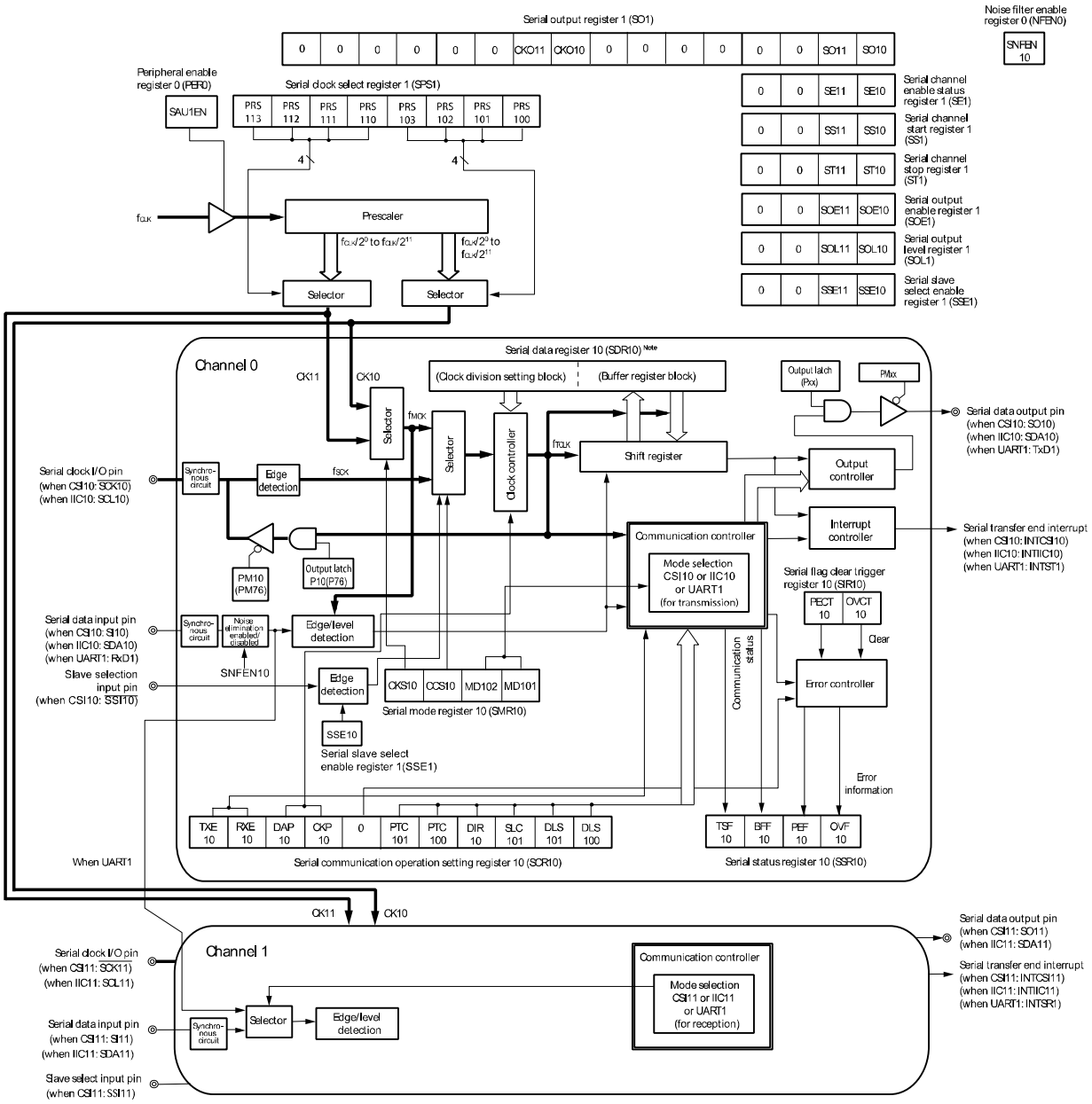

Caution: If operation is stopped (SEmn = 0), the upper 7 bits set the clock division, and the lower bits have no meaning.

If operation is in progress (SEmn = 1), the serial data register 10 functions as the buffer register.

(1) Shift register

This is a 16-bit register that converts parallel data into serial data or vice versa.

During reception, it converts data input to the serial pin into parallel data.

When data is transmitted, the value set to this register is output as serial data from the serial output pin.

The shift register cannot be directly manipulated by program.

To read or write the shift register, use the serial data register mn (SDRmn) when operation is in progress (SEmn = 1).

	15	14	13	12	11	10	9	8	7	6	5	4	3	2	1	0
Shift register																

(2) Serial data register mn (SDRmn)

The SDRmn register is the transmit/receive data register (16 bits) of channel n. If operation is stopped (SEmn = 0), bits 15 to 9 are used as a register that sets the division ratio of the operation clock (f_{MCK}). If operation is in progress (SEmn = 1), the SDRmn register functions as a transmit/receive buffer register.

When data is received, parallel data converted by the shift register is stored. When data is to be transmitted, set transmit data to be transferred to the shift register .

The data to be stored is as follows, depending on the setting of bits 4 to 0 (DLSmn4 to DLSmn0) of serial communication operation setting register mn (SCRmn), regardless of the output sequence of the data.

- 7-bit data length (stored in bits 0 to 6 of SDRmn register)
- 8-bit data length (stored in bits 0 to 7 of SDRmn register)
- 9-bit data length (stored in bits 0 to 8 of SDRmn register)

:

- 16-bit data length (stored in bits 0 to 15 of SDRmn register)

The SDRmn register can be read or written in 16-bit units.

The lower 8 bits of the SDRmn register can be read or written as the following SFR when operation is in progress (SEmn = 1). The following SDRmnL registers are available, depending on the communication mode.

- CSIp communication … SDRpL
- UARTq reception … SDRmnL
- UARTq transmission … SDRmnL
- IICr communication … SDRrL

Reset signal generation clears the SDRmn register to 0000H.

Note Writing in 8-bit units is prohibited when the operation is stopped (SEmn = 0).

Remark m: Unit number (m = 0, 1), n: Channel number (n = 0, 1), p: CSI number (p = 00, 01, 10, 11), q: UART number (q = 0, 1), r: IIC number (r = 00, 01, 10, 11)

Figure 15-3. Format of Serial Data Register mn (SDRmn) (mn = 00, 01, 10, 11)

Address: FFF10H, FFF11H (SDR00), FFF12H, FFF13H (SDR01) After reset: 0000H R/W
FFF48H, FFF49H (SDR10), FFF4AH, FFF4BH (SDR11)

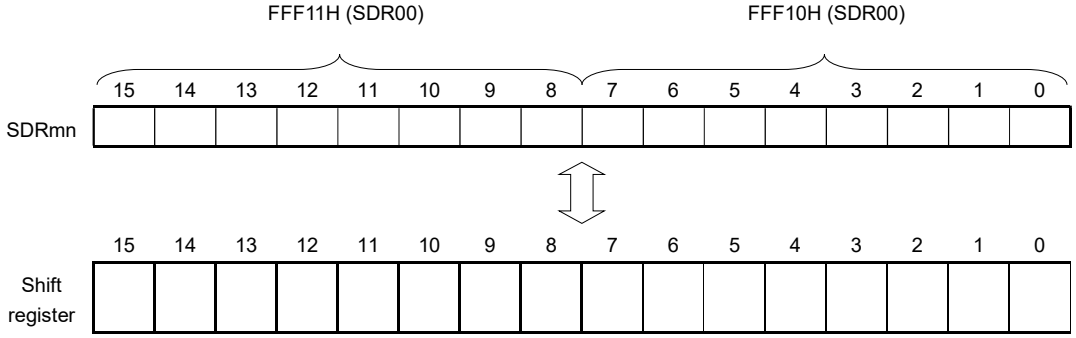

Remark For the function of the higher 7 bits of the SDRmn register, see **15.3 Registers Controlling Serial Array Unit**.

15.3 Registers Controlling Serial Array Unit

Serial array unit is controlled by the following registers.

- Peripheral enable register 0 (PER0)
- Serial clock select register m (SPSm)
- Serial mode register mn (SMRmn)
- Serial communication operation setting register mn (SCRmn)
- Serial data register mn (SDRmn)
- Serial flag clear trigger register mn (SIRmn)
- Serial status register mn (SSRmn)
- Serial channel start register m (SSm)
- Serial channel stop register m (STm)
- Serial channel enable status register m (SEm)
- Serial output enable register m (SOEm)
- Serial output level register m (SOLm)
- Serial output register m (SOm)
- Serial slave select enable register m (SSEm)
- Input switch control register (ISC)
- Noise filter enable register 0 (NFEN0)
- Port input mode registers 1, 3, 5 to 7, 12 (PIM1, PIM3, PIM5 to PIM7, PIM12)
- Port output mode registers 1, 6, 7, 12 (POM1, POM6, POM7, POM12)
- Port mode registers 1, 3, 5 to 7, 12 (PM1, PM3, PM5 to PM7, PM12)
- Port registers 1, 3, 5 to 7, 12 (P1, P3, P5 to P7, P12)
- Port mode control register 12 (PMC12)
- Port input threshold control registers 1, 3, 5 to 7, and 12 (PITHL1, PITHL3, PITHL5 to PITHL7, PITHL12)
- Port output slew rate select register (PSRSEL)

Remark m: Unit number (m = 0, 1), n: Channel number (n = 0, 1)

15.3.1 Peripheral enable register 0 (PER0)

PER0 is used to enable or disable supplying the clock to the peripheral hardware. Clock supply to a hardware macro that is not used is stopped in order to reduce the power consumption and noise.

When serial array unit 0 is used, be sure to set bit 2 (SAU0EN) of this register to 1.

When serial array unit 1 is used, be sure to set bit 3 (SAU1EN) of this register to 1.

Set the PER0 register by a 1-bit or 8-bit memory manipulation instruction.

Reset signal generation clears the PER0 register to 00H.

Figure 15-4. Format of Peripheral Enable Register 0 (PER0)

Address: F00F0H After reset: 00H R/W

Symbol	<7>	6	<5>	<4>	<3>	<2>	<1>	<0>
PER0	RTCEN	0	ADCEN	IICA0EN	SAU1EN	SAU0EN	TAU1EN	TAU0EN

SAUmEN	Control of serial array unit m input clock supply
0	Stops supply of input clock. • SFR used by serial array unit m cannot be written. • Serial array unit m is in the reset status.
1	Enables input clock supply. • SFR used by serial array unit m can be read/written.

Cautions 1. When setting serial array unit m, be sure to set the SAUmEN bit to 1 first. If SAUmEN = 0, writing to a control register of serial array unit m is ignored, and, even if the register is read, only the default value is read (except for the input switch control register (ISC), noise filter enable register 0 (NFEN0), port input mode registers 1, 3, 5 to 7, 12 (PIM1, PIM3, PIM5 to PIM7, PIM12), port output mode registers 1, 6, 7, 12 (POM1, POM6, POM7, POM12), port mode registers 1, 3, 5 to 7, 12 (PM1, PM3, PM5 to PM7, PM12), port registers 1, 3, 5 to 7, 12 (P0, P1, P3, P5 to P7, P12), port mode control register 12 (PMC12), port input threshold control registers 1, 3, 5 to 7, and 12 (PITHL1, PITHL3, PITHL5 to PITHL7, and PITHL12), and port output slew rate select register (PSRSEL)).

2. Be sure to clear the following bits to 0.
Bits 1, 3, 4, and 6 in the RL78/F13 (LIN incorporated) products with 20, 30, 32, 48, or 64 pins and 16 Kbytes to 64 Kbytes of code flash memory
Bits 4 and 6 in 30-pin products of the RL78/F13 (CAN and LIN incorporated) and in 30-pin products of the RL78/F14
Bit 6 in the products other than above

15.3.2 Serial clock select register m (SPSm)

The SPSm register is a 16-bit register that is used to select two types of operation clocks (CKm0, CKm1) that are commonly supplied to each channel. CKm1 is selected by bits 7 to 4 of the SPSm register, and CKm0 is selected by bits 3 to 0.

Rewriting the SPSm register is prohibited when the register is in operation (when SEmn = 1).

The SPSm register can be set by a 16-bit memory manipulation instruction.

Set the lower 8 bits of the SPSm register with an 8-bit memory manipulation instruction with SPSmL.

Reset signal generation clears the SPSm register to 0000H.

Figure 15-5. Format of Serial Clock Select Register m (SPSm)

Address: F0116H, F0117H (SPS0), F0156H, F0157H (SPS1) After reset: 0000H R/W

Symbol	15	14	13	12	11	10	9	8	7	6	5	4	3	2	1	0
SPSm	0	0	0	0	0	0	0	0	PRS m13	PRS m12	PRS m11	PRS m10	PRS m03	PRS m02	PRS m01	PRS m00

PRS mk3	PRS mk2	PRS mk1	PRS mk0	Section of operation clock (CKmk) Note					
					f_{CLK} = 2 MHz	f_{CLK} = 5 MHz	f_{CLK} = 10 MHz	f_{CLK} = 20 MHz	f_{CLK} = 32 MHz
0	0	0	0	f_{CLK}	2 MHz	5 MHz	10 MHz	20 MHz	32 MHz
0	0	0	1	$f_{CLK}/2$	1 MHz	2.5 MHz	5 MHz	10 MHz	16 MHz
0	0	1	0	$f_{CLK}/2^2$	500 kHz	1.25 MHz	2.5 MHz	5 MHz	8 MHz
0	0	1	1	$f_{CLK}/2^3$	250 kHz	625 kHz	1.25 MHz	2.5 MHz	4 MHz
0	1	0	0	$f_{CLK}/2^4$	125 kHz	313 kHz	625 kHz	1.25 MHz	2 MHz
0	1	0	1	$f_{CLK}/2^5$	62.5 kHz	156 kHz	313 kHz	625 kHz	1 MHz
0	1	1	0	$f_{CLK}/2^6$	31.3 kHz	78.1 kHz	156 kHz	313 kHz	500 kHz
0	1	1	1	$f_{CLK}/2^7$	15.6 kHz	39.1 kHz	78.1 kHz	156 kHz	250 kHz
1	0	0	0	$f_{CLK}/2^8$	7.81 kHz	19.5 kHz	39.1 kHz	78.1 kHz	125 kHz
1	0	0	1	$f_{CLK}/2^9$	3.91 kHz	9.77 kHz	19.5 kHz	39.1 kHz	62.5 kHz
1	0	1	0	$f_{CLK}/2^{10}$	1.95 kHz	4.88 kHz	9.77 kHz	19.5 kHz	31.3 kHz
1	0	1	1	$f_{CLK}/2^{11}$	977 Hz	2.44 kHz	4.88 kHz	9.77 kHz	15.6 kHz
Other than above				Setting prohibited					

Note When changing the clock selected for f_{CLK} (by changing the system clock control register (CKC) value), do so after having stopped (serial channel stop register m (STm) = 0003H) the operation of the serial array units (SAUs).

Caution Be sure to clear bits 15 to 8 to 0.

Remarks 1. f_{CLK}: CPU/peripheral hardware clock frequency
f_{SUB}: Subsystem clock frequency

2. m: Unit number (m = 0, 1), k = 0, 1

15.3.3 Serial mode register mn (SMRmn)

The SMRmn register is a register that sets an operation mode of channel n. It is also used to select an operation clock (f_{MCK}), specify whether the serial clock (f_{SCK}) may be input or not, set a start trigger, an operation mode (CSI, UART, or simplified I^2C), and an interrupt source. This register is also used to invert the level of the receive data only in the UART mode.

Rewriting the SMRmn register is prohibited when the register is in operation (when SEmn = 1). However, the MDmn0 bit can be rewritten during operation.

Set the SMRmn register by a 16-bit memory manipulation instruction.

Reset signal generation sets the SMRmn register to 0020H.

Figure 15-6. Format of Serial Mode Register mn (SMRmn) (1/2)

Address: F0108H, F0109H (SMR00), F010AH, F010BH (SMR01), F0148H, F0149H (SMR10), F014AH, F014BH (SMR11) After reset: 0020H R/W

Symbol	15	14	13	12	11	10	9	8	7	6	5	4	3	2	1	0
SMRmn	CKS mn	CCS mn	0	0	0	0	0	STS mn	0	SIS mn0	1	0	0	MD mn2	MD mn1	MD mn0

CKS mn	Selection of operation clock (f_{MCK}) of channel n
0	Operation clock CKm0 set by the SPSm register
1	Operation clock CKm1 set by the SPSm register
Operation clock (f_{MCK}) is used by the edge detector. In addition, depending on the setting of the CCSmn bit and the higher 7 bits of the SDRmn register, a transfer clock (f_{TCLK}) is generated.	

CCS mn	Selection of transfer clock (f_{TCLK}) of channel n
0	Divided operation clock f_{MCK} specified by the CKSmn bit
1	Clock input f_{SCK} from the $\overline{SCKp}$ pin (slave transfer in CSI mode)
Transfer clock f_{TCLK} is used for the shift register, communication controller, output controller, interrupt controller, and error controller. When CCSmn = 0, the division ratio of operation clock (f_{MCK}) is set by the higher 7 bits of the SDRmn register.	

STS mn	Selection of start trigger source
0	Only software trigger is valid (selected for CSI, UART transmission, and simplified I^2C).
1	Valid edge of the RxDq pin (selected for UART reception)
Transfer is started when the above source is satisfied after 1 is set to the SSm register.	

Caution Be sure to clear bits 13 to 9, 7, 4, and 3 to 0. Be sure to set bit 5 to 1.

Remark m: Unit number (m = 0, 1), n: Channel number (n = 0, 1), p: CSI number (p = 00, 01, 10, 11), q: UART number (q = 0, 1), r: IIC number (r = 00, 01, 10, 11)

Figure 15-6. Format of Serial Mode Register mn (SMRmn) (2/2)

Address: F0108H, F0109H (SMR00), F010AH, F010BH (SMR01), F0148H, F0149H (SMR10), F014AH, F014BH (SMR11) After reset: 0020H R/W

Symbol	15	14	13	12	11	10	9	8	7	6	5	4	3	2	1	0
SMRmn	CKS mn	CCS mn	0	0	0	0	0	STS mn	0	SIS mn0	1	0	0	MD mn2	MD mn1	MD mn0

SIS mn0	Controls inversion of level of receive data of channel n in UART mode
0	Falling edge is detected as the start bit. The input communication data is captured as is.
1	Rising edge is detected as the start bit. The input communication data is inverted and captured.

MD mn2	MD mn1	Setting of operation mode of channel n
0	0	CSI mode
0	1	UART mode
1	0	Simplified I^2C mode
1	1	Setting prohibited

MD mn0	Selection of interrupt source of channel n
0	Transfer end interrupt
1	Buffer empty interrupt (Occurs when data is transferred from the SDRmn register to the shift register.)
For successive transmission, the next transmit data is written by setting the MDmn0 bit to 1 when SDRmn data has run out.	

Caution Be sure to clear bits 13 to 9, 7, 4, and 3 to 0. Be sure to set bit 5 to 1.

Remark m: Unit number (m = 0, 1), n: Channel number (n = 0, 1), p: CSI number (p = 00, 01, 10, 11), q: UART number (q = 0, 1), r: IIC number (r = 00, 01, 10, 11)

15.3.4 Serial communication operation setting register mn (SCRmn)

The SCRmn register is a communication operation setting register of channel n. It is used to set a data transmission/reception mode, phase of data and clock, whether an error signal is to be masked or not, parity bit, start bit, stop bit, and data length.

Rewriting the SCRmn register is prohibited when the register is in operation (when SEmn = 1).

Set the SCRmn register by a 16-bit memory manipulation instruction.

Reset signal generation sets the SCRmn register to 0087H.

Figure 15-7. Format of Serial Communication Operation Setting Register mn (SCRmn) (1/3)

Address: F010CH, F010DH (SCR00), F010EH, F010FH (SCR01), F014CH, F014DH (SCR10), F014EH, F014FH (SCR11) After reset: 0087H R/W

Symbol	15	14	13	12	11	10	9	8	7	6	5	4	3	2	1	0
SCRmn	TXE mn	RXE mn	DAP mn	CKP mn	0	0	PTC mn1	PTC mn0	DIR mn	0	SLC mn1	SLC mn0	DLS mn3	DLS mn2	DLS mn1	DLS mn0

TXE mn	RXE mn	Setting of operation mode of channel n
0	0	Disable communication.
0	1	Reception only
1	0	Transmission only
1	1	Transmission/reception

DAP mn	CKP mn	Selection of data and clock phase in CSI mode	Type
0	0	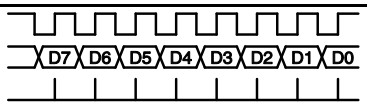	1
0	1	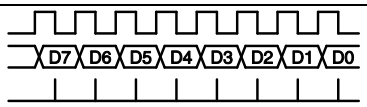	2
1	0	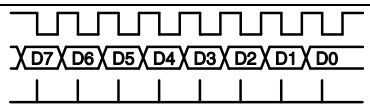	3
1	1	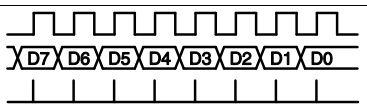	4
Be sure to set DAPmn, CKPmn = 0, 0 in the UART mode and simplified I^2C mode. Set CKPmn to 1, when SSEmn = 1 (Enables $\overline{SSImn}$ pin input).			

Caution Be sure to clear bits 6, 10, and 11 to 0.

Remark m: Unit number (m = 0, 1), n: Channel number (n = 0, 1), p: CSI number (p = 00, 01, 10, 11)

Figure 15-7. Format of Serial Communication Operation Setting Register mn (SCRmn) (2/3)

<R> Address: F010CH, F010DH (SCR00), F010EH, F010FH (SCR01), F014CH, F014DH (SCR10), F014EH, F014FH (SCR11) After reset: 0087H R/W

Symbol	15	14	13	12	11	10	9	8	7	6	5	4	3	2	1	0
SCRmn	TXE mn	RXE mn	DAP mn	CKP mn	0	0	PTC mn1	PTC mn0	DIR mn	0	SLC mn1	SLC mn0	DLS mn3	DLS mn2	DLS mn1	DLS mn0

PTC mn1	PTC mn0	Setting of parity bit in UART mode	
		Transmission	Reception
0	0	Does not output the parity bit.	Receives without parity
0	1	Outputs 0 parity Note.	No parity judgment
1	0	Outputs even parity.	Judged as even parity.
1	1	Outputs odd parity.	Judges as odd parity.
Be sure to set PTCmn1, PTCmn0 = 0, 0 in the CSI mode and simplified I²C mode.			

DIR mn	Selection of data transfer sequence in CSI and UART modes
0	Inputs/outputs data with MSB first.
1	Inputs/outputs data with LSB first.
Be sure to clear DIRmn = 0 in the simplified I²C mode.	

SLCmn1	SLC mn0	Setting of stop bit in UART mode
0	0	No stop bit
0	1	Stop bit length = 1 bit
1	0	Stop bit length = 2 bits (mn = 00, 10 only)
1	1	Setting prohibited
When the transfer end interrupt is selected, the interrupt is generated when all stop bits have been completely transferred. Set 1 bit (SLCmn1, SLCmn0 = 0, 1) during UART reception and in the simplified I²C mode. Set no stop bit (SLCmn1, SLCmn0 = 0, 0) in the CSI mode.		

Note "0" is always added regardless of the contents of data.

Caution Be sure to clear bits 6, 10, and 11 to 0.

Remark m: Unit number (m = 0, 1), n: Channel number (n = 0, 1), p: CSI number (p = 00, 01, 10, 11)

Figure 15-7. Format of Serial Communication Operation Setting Register mn (SCRmn) (3/3)

<R> Address: F010CH, F010DH (SCR00), F010EH, F010FH (SCR01), F014CH, F014DH (SCR10), F014EH, F014FH (SCR11) After reset: 0087H R/W

Symbol	15	14	13	12	11	10	9	8	7	6	5	4	3	2	1	0
SCRmn	TXE mn	RXE mn	DAP mn	CKP mn	0	0	PTC mn1	PTC mn0	DIR mn	0	SLC mn1	SLC mn0	DLS mn3	DLS mn2	DLS mn1	DLS mn0

DLS mn3	DLS mn2	DLS mn1	DLS mn0	Setting of data length in CSI, UART mode	Serial function		
					CSI	UART	IIC
0	1	1	0	7 bits (stored in bits 0 to 6 of SDRmn register)	√	√	-
0	1	1	1	8 bits (stored in bits 0 to 7 of SDRmn register)	√	√	√
1	0	0	0	9 bits (stored in bits 0 to 8 of SDRmn register)	√	√	-
1	0	0	1	10 bits (stored in bits 0 to 9 of SDRmn register)	√	-	-
1	0	1	0	11 bits (stored in bits 0 to 10 of SDRmn register)	√	-	-
1	0	1	1	12 bits (stored in bits 0 to 11 of SDRmn register)	√	-	-
1	1	0	0	13 bits (stored in bits 0 to 12 of SDRmn register)	√	-	-
1	1	0	1	14 bits (stored in bits 0 to 13 of SDRmn register)	√	-	-
1	1	1	0	15 bits (stored in bits 0 to 14 of SDRmn register)	√	-	-
1	1	1	1	16 bits (stored in bits 0 to 15 of SDRmn register)	√	√	-
Other than above				Setting prohibited			
Set DLSmn3 to DLSmn0 to 0111B in the simplified I^2C mode.							

Caution Be sure to clear bits 6, 10, and 11 to 0.

Remark m: Unit number (m = 0, 1), n: Channel number (n = 0, 1), p: CSI number (p = 00, 01, 10, 11)

15.3.5 Higher 7 bits of the serial data register mn (SDRmn)

The SDRmn register is the transmit/receive data register (16 bits) of channel n.

If operation is stopped (SEmn = 0), bits 15 to 9 are used as a register that sets the division ratio of the operation clock (f_{MCK}). If operation is in progress (SEmn = 1), the SDRmn register functions as a transmit/receive buffer register.

If the CCSmn bit of the serial mode register mn (SMRmn) is cleared to 0, the clock set by dividing the operating clock by the higher 7 bits of the SDRmn register is used as the transfer clock.

For the function of the SDR register when operation is in progress, see **15.2 Configuration of Serial Array Unit**.

SDRmn can be read or written in 16-bit units.

Reset signal generation clears the SDRmn register to 0000H.

Figure 15-8. Format of Serial Data Register mn (SDRmn)

Address: FFF10H, FFF11H (SDR00), FFF12H, FFF13H (SDR01) After reset: 0000H R/W
FFF48H, FFF49H (SDR10), FFF4AH, FFF4BH (SDR11)

	FFF11H (SDR00)								FFF10H (SDR00)							
Symbol	15	14	13	12	11	10	9	8	7	6	5	4	3	2	1	0
SDRmn								0	0	0	0	0	0	0	0	0

SDRmn[15:9]							Transfer clock set by dividing the operating clock (f_{MCK})
0	0	0	0	0	0	0	$f_{MCK}/2$
0	0	0	0	0	0	1	$f_{MCK}/4$
0	0	0	0	0	1	0	$f_{MCK}/6$
0	0	0	0	0	1	1	$f_{MCK}/8$
• • •	• • •	• • •	• • •	• • •	• • •	• • •	• • •
1	1	1	1	1	1	0	$f_{MCK}/254$
1	1	1	1	1	1	1	$f_{MCK}/256$

(**Cautions** and **Remarks** are listed on the next page.)

Cautions 1. Be sure to clear bits 8 to 0 to 0 if operation is stopped (SEmn = 0).

2. Setting SDRmn[15:9] = (0000000B, 0000001B) is prohibited when UART is used.

3. Setting SDRmn[15:9] = 0000000B is prohibited when simplified I^2C is used. Set SDRmn[15:9] to 0000001B or greater.

4. Do not write eight bits to the lower eight bits if operation is stopped (SEmn = 0). (If these bits are written to, the higher seven bits are cleared to 0.)

Remarks 1. For the function of the SDRmn register when operation is in progress (SEmn = 1), see **15.2 Configuration of Serial Array Unit**.

2. m: Unit number (m = 0, 1), n: Channel number (n = 0, 1)

15.3.6 Serial flag clear trigger register mn (SIRmn)

The SIRmn register is a trigger register that is used to clear each error flag of channel n.

When each bit (FECTmn, PECTmn, OVCTmn) of this register is set to 1, the corresponding bit (FEFmn, PEFmn, OVFmn) of the serial status register mn is cleared to 0. Because the SIRmn register is a trigger register, it is cleared immediately when the corresponding bit of the SSRmn register is cleared.

Set the SIRmn register by a 16-bit memory manipulation instruction.

Set the lower 8 bits of the SIRmn register with an 8-bit memory manipulation instruction with SIRmnL.

Reset signal generation clears the SIRmn register to 0000H.

Figure 15-9. Format of Serial Flag Clear Trigger Register mn (SIRmn)

Address: F0104H, F0105H (SIR00), F0106H, F0107H (SIR01), F0144H, F0145H (SIR10), F0146H, F0147H (SIR11) After reset: 0000H R/W

Symbol	15	14	13	12	11	10	9	8	7	6	5	4	3	2	1	0
SIRmn	0	0	0	0	0	0	0	0	0	0	0	0	0	FECTmn	PECTmn	OVCTmn

<R>

FECTmn	Clear trigger of framing error flag of channel n
0	Not cleared
1	Clears the FEFmn bit of the SSRmn register to 0.

PECTmn	Clear trigger of parity error flag of channel n
0	Not cleared
1	Clears the PEFmn bit of the SSRmn register to 0.

OVCTmn	Clear trigger of overrun error flag of channel n
0	Not cleared
1	Clears the OVFmn bit of the SSRmn register to 0.

Cautions 1. Be sure to clear bits 15 to 3 to 0.

2. Use the SIRmn register to clear only the error flag set in the SSRn register. If the error flag not set in this register is cleared, the flag may be erased when an error is detected from reading to clearing this error flag.

Remarks 1. m: Unit number (m = 0, 1), n: Channel number (n = 0, 1)

2. When the SIRmn register is read, 0000H is always read.

3. If the clear trigger bit is set to 1 and the corresponding error flag is set to 1 at the same time, the error flag setting is prioritized.

15.3.7 Serial status register mn (SSRmn)

The SSRmn register is a register that indicates the communication status and error occurrence status of channel n.

The errors indicated by this register are a framing error, parity error, and overrun error.

The SSRmn register can be read by a 16-bit memory manipulation instruction.

The lower 8 bits of the SSRmn register can be read with an 8-bit memory manipulation instruction with SSRmnL.

Reset signal generation clears the SSRmn register to 0000H.

Figure 15-10. Format of Serial Status Register mn (SSRmn) (1/2)

Address: F0100H, F0101H (SSR00), F0102H, F0103H (SSR01), F0140H, F0141H (SSR10), F0142H, F0143H (SSR11) After reset: 0000H R

Symbol	15	14	13	12	11	10	9	8	7	6	5	4	3	2	1	0
SSRmn	0	0	0	0	0	0	0	0	0	TSF mn	BFF mn	0	0	FEF mn	PEF mn	OVF mn

TSF mn	Communication status indication flag of channel n
0	Communication is stopped or suspended.
1	Communication is in progress.

<Clear conditions>
- The STmn bit of the STm register is set to 1 (communication is stopped) or the SSmn bit of the SSm register is set to 1 (communication is suspended).
- Communication ends.

<Set condition>
- Communication starts.

BFF mn	Buffer register status indication flag of channel n
0	Valid data is not stored in the SDRmn register.
1	Valid data is stored in the SDRmn register.

<Clear conditions>
- Transferring transmit data from the SDRmn register to the shift register ends during transmission.
- Reading receive data from the SDRmn register ends during reception.
- The STmn bit of the STm register is set to 1 (communication is stopped) or the SSmn bit of the SSm register is set to 1 (communication is enabled).

<Set conditions>
- Transmit data is written to the SDRmn register while the TXEmn bit of the SCRmn register is set to 1 (transmission or transmission and reception mode in each communication mode).
- Receive data is stored in the SDRmn register while the RXEmn bit of the SCRmn register is set to 1 (reception or transmission and reception mode in each communication mode).
- A reception error occurs.

Caution If data is written to the SDRmn register when BFFmn = 1, the transmit/receive data stored in the register is discarded and an overrun error (OVEmn = 1) is detected.

Remark m: Unit number (m = 0, 1), n: Channel number (n = 0, 1)

Figure 15-10. Format of Serial Status Register mn (SSRmn) (2/2)

Address: F0100H, F0101H (SSR00), F0102H, F0103H (SSR01), F0140H, F0141H (SSR10), F0142H, F0143H (SSR11) After reset: 0000H R

Symbol	15	14	13	12	11	10	9	8	7	6	5	4	3	2	1	0
SSRmn	0	0	0	0	0	0	0	0	0	TSF mn	BFF mn	0	0	FEF mn	PEF mn	OVF mn

FEFmn	Framing error detection flag of channel n
0	No error occurs.
1	An error occurs (during UART reception).

<Clear condition>
- 1 is written to the FECTmn bit of the SIRmn register.

<Set condition>
- A stop bit is not detected when UART reception ends.

PEF mn	Parity error detection flag of channel n
0	No error occurs.
1	An error occurs (during UART reception) or ACK is not detected (during I^2C transmission).

<Clear condition>
- 1 is written to the PECTmn bit of the SIRmn register.

<Set condition>
- The parity of the transmit data and the parity bit do not match when UART reception ends (parity error).
- No ACK signal is returned from the slave channel at the ACK reception timing during I^2C transmission (ACK is not detected).

OVF mn	Overrun error detection flag of channel n
0	No error occurs.
1	An error occurs.

<Clear condition>
- 1 is written to the OVCTmn bit of the SIRmn register.

<Set condition>
- Even though receive data is stored in the SDRmn register, that data is not read and transmit data or the next receive data is written while the RXEmn bit of the SCRmn register is set to 1 (reception or transmission and reception mode in each communication mode).
- Transmit data is not ready for slave transmission or transmission and reception in CSI mode.

Remark m: Unit number (m = 0, 1), n: Channel number (n = 0, 1)

15.3.8 Serial channel start register m (SSm)

The SSm register is a trigger register that is used to enable starting communication/count by each channel.

When 1 is written a bit of this register (SSmn), the corresponding bit (SEmn) of serial channel enable status register m (SEm) is set to 1 (Operation is enabled). Because the SSmn bit is a trigger bit, it is cleared immediately when SEmn = 1.

Set the SSm register by a 16-bit memory manipulation instruction.

Set the lower 8 bits of the SSm register with an 1-bit or 8-bit memory manipulation instruction with SSmL.

Reset signal generation clears the SSm register to 0000H.

Figure 15-11. Format of Serial Channel Start Register m (SSm)

Address: F0112H, F0113H (SS0) After reset: 0000H R/W

Symbol	15	14	13	12	11	10	9	8	7	6	5	4	3	2	1	0
SS0	0	0	0	0	0	0	0	0	0	0	0	0	0	0	SS01	SS00

Address: F0152H, F0153H (SS1) After reset: 0000H R/W

Symbol	15	14	13	12	11	10	9	8	7	6	5	4	3	2	1	0
SS1	0	0	0	0	0	0	0	0	0	0	0	0	0	0	SS11	SS10

SSmn	Operation start trigger of channel n
0	No trigger operation
1	Sets the SEmn bit to 1 and enters the communication wait status Note.

Note If a communication operation is already under execution, the operation is stopped.
The value of the control register and shift register, and the status of the serial clock I/O pin, serial data output pin, and each error flag (FEFmn: framing error flag, PEFmn: parity error flag, OVFmn: overrun error flag) are held.

Cautions 1. Be sure to clear bits 15 to 2 of the SS0 register and bits 15 to 2 of the SS1 register to 0.

2. For the UART reception, set the RXEmn bit of SCRmn register to 1, and then be sure to set SSmn to 1 after 4 or more f_{MCK} clocks have elapsed.

Remarks 1. m: Unit number (m = 0, 1), n: Channel number (n = 0, 1)

2. When the SSm register is read, 0000H is always read.

15.3.9 Serial channel stop register m (STm)

The STm register is a trigger register that is used to enable stopping communication/count by each channel.

When 1 is written a bit of this register (STmn), the corresponding bit (SEmn) of serial channel enable status register m (SEm) is cleared to 0 (operation is stopped). Because the STmn bit is a trigger bit, it is cleared immediately when SEmn = 0.

Set the STm register by a 16-bit memory manipulation instruction.

Set the lower 8 bits of the STm register with a 1-bit or 8-bit memory manipulation instruction with STmL.

Reset signal generation clears the STm register to 0000H.

Figure 15-12. Format of Serial Channel Stop Register m (STm)

Address: F0114H, F0115H (ST0) After reset: 0000H R/W

Symbol	15	14	13	12	11	10	9	8	7	6	5	4	3	2	1	0
ST0	0	0	0	0	0	0	0	0	0	0	0	0	0	0	ST01	ST00

Address: F0154H, F0155H (ST1) After reset: 0000H R/W

Symbol	15	14	13	12	11	10	9	8	7	6	5	4	3	2	1	0
ST1	0	0	0	0	0	0	0	0	0	0	0	0	0	0	ST11	ST10

STm n	Operation stop trigger of channel n
0	No trigger operation
1	Clears the SEmn bit to 0 and stops the communication operation[Note].

Note Communication stops while holding the value of the control register and shift register, and the status of the serial clock I/O pin, serial data output pin, and each error flag (FEFmn: framing error flag, PEFmn: parity error flag, OVFmn: overrun error flag).

Caution Be sure to clear bits 15 to 2 of the ST0 register and bits 15 to 2 of the ST1 register to 0.

Remarks 1. m: Unit number (m = 0, 1), n: Channel number (n = 0, 1)

2. When the STm register is read, 0000H is always read.

15.3.10 Serial channel enable status register m (SEm)

The SEm register indicates whether data transmission/reception operation of each channel is enabled or stopped. When 1 is written a bit of serial channel start register m (SSm), the corresponding bit of this register is set to 1. When 1 is written a bit of serial channel stop register m (STm), the corresponding bit is cleared to 0.

Channel n that is enabled to operate cannot rewrite by software the value of the CKOmn bit (serial clock output of channel n) of serial output register m (SOm) to be described below, and a value reflected by a communication operation is output from the serial clock pin.

Channel n that stops operation can set the value of the CKOmn bit of the SOm register by software and output its value from the serial clock pin. In this way, any waveform, such as that of a start condition/stop condition, can be created by software.

Read the SEm register by a 16-bit memory manipulation instruction.

<R> Read the lower 8 bits of the SEm register with a 1-bit or 8-bit memory manipulation instruction with SEmL.

Reset signal generation clears the SEm register to 0000H.

Figure 15-13. Format of Serial Channel Enable Status Register m (SEm)

Address: F0110H, F0111H (SE0) After reset: 0000H R

Symbol	15	14	13	12	11	10	9	8	7	6	5	4	3	2	1	0
SE0	0	0	0	0	0	0	0	0	0	0	0	0	0	0	SE01	SE00

Address: F0150H, F0151H (SE1) After reset: 0000H R

Symbol	15	14	13	12	11	10	9	8	7	6	5	4	3	2	1	0
SE1	0	0	0	0	0	0	0	0	0	0	0	0	0	0	SE11	SE10

SEm n	Indication of operation enable/stop status of channel n
0	Operation stops Note
1	Operation is enabled.

Note The control register, shift register value, serial clock I/O pin, serial data output pin, and error flags (FEFmn: framing error flag, PEFmn: parity error flag, OVFmn: over error flag)) are stopped with the state retained. Bits 6 and 5 (TSFmn and BFFmn) in the SSRmn register are cleared.

Remark m: Unit number (m = 0, 1), n: Channel number (n = 0, 1)

15.3.11 Serial output enable register m (SOEm)

The SOEm register is a register that is used to enable or stop output of the serial communication operation of each channel.

Channel n that enables serial output cannot rewrite by software the value of the SOmn bit of serial output register m (SOm) to be described below, and a value reflected by a communication operation is output from the serial data output pin.

For channel n, whose serial output is stopped, the SOmn bit value of the SOm register can be set by software, and that value can be output from the serial data output pin. In this way, any waveform of the start condition and stop condition can be created by software.

Set the SOEm register by a 16-bit memory manipulation instruction.

Set the lower 8 bits of the SOEm register with a 1-bit or 8-bit memory manipulation instruction with SOEmL.

Reset signal generation clears the SOEm register to 0000H.

Figure 15-14. Format of Serial Output Enable Register m (SOEm)

Address: F011AH, F011BH After reset: 0000H R/W

Symbol	15	14	13	12	11	10	9	8	7	6	5	4	3	2	1	0
SOE0	0	0	0	0	0	0	0	0	0	0	0	0	0	0	SOE01	SOE00

Address: F015AH, F015BH After reset: 0000H R/W

Symbol	15	14	13	12	11	10	9	8	7	6	5	4	3	2	1	0
SOE1	0	0	0	0	0	0	0	0	0	0	0	0	0	0	SOE11	SOE10

SOEmn	Serial output enable/stop of channel n
0	Stops output by serial communication operation.
1	Enables output by serial communication operation.

Caution Be sure to clear bits 15 to 2 of the SOE0 register and bits 15 to 2 of the SOE1 register to 0.

Remark m: Unit number (m = 0, 1), n: Channel number (n = 0, 1)

15.3.12 Serial output register m (SOm)

The SOm register is a buffer register for serial output of each channel.

The value of the SOmn bit of this register is output from the serial data output pin of channel n.

The value of the CKOmn bit of this register is output from the serial clock output pin of channel n.

The SOmn bit of this register can be rewritten by software only when serial output is disabled (SOEmn = 0). When serial output is enabled (SOEmn = 1), rewriting by software is ignored, and the value of the register can be changed only by a serial communication operation.

The CKOmn bit of this register can be rewritten by software only when the channel operation is stopped (SEmn = 0). While channel operation is enabled (SEmn = 1), rewriting by software is ignored, and the value of the CKOmn bit can be changed only by a serial communication operation.

To use the pin for serial interface as a port function pin, set the corresponding CKOmn and SOmn bits to 1.

Set the SOm register by a 16-bit memory manipulation instruction.

Reset signal generation clears the SOm register to 0303H.

Figure 15-15. Format of Serial Output Register m (SOm)

Address: F0118H, F0119H After reset: 0303H R/W

Symbol	15	14	13	12	11	10	9	8	7	6	5	4	3	2	1	0
SO0	0	0	0	0	0	0	CKO 01	CKO 00	0	0	0	0	0	0	SO 01	SO 00

Address: F0158H, F0159H After reset: 0303H R/W

Symbol	15	14	13	12	11	10	9	8	7	6	5	4	3	2	1	0
SO1	0	0	0	0	0	0	CKO 11	CKO 10	0	0	0	0	0	0	SO 11	SO 10

CKO mn	Serial clock output of channel n
0	Serial clock output value is 0.
1	Serial clock output value is 1.

SO mn	Serial data output of channel n
0	Serial data output value is 0.
1	Serial data output value is 1.

<R> **Caution Be sure to clear bits 15 to 10 and 7 to 2 of the SOm register to 0.**

Remark m: Unit number (m = 0, 1), n: Channel number (n = 0, 1)

15.3.13 Serial output level register m (SOLm)

The SOLm register is a register that is used to set inversion of the data output level of each channel.

This register can be set only in the UART mode. Be sure to set 0 for corresponding bit in the CSI mode and simplifies I^2C mode.

Inverting channel n by using this register is reflected on pin output only when serial output is enabled (SOEmn = 1).

When serial output is disabled (SOEmn = 0), the value of the SOmn bit is output as is.

Rewriting the SOLm register is prohibited when the register is in operation (when SEmn = 1).

Set the SOLm register by a 16-bit memory manipulation instruction.

Set the lower 8 bits of the SOLm register with an 8-bit memory manipulation instruction with SOLmL.

Reset signal generation clears the SOLm register to 0000H.

Figure 15-16. Format of Serial Output Level Register m (SOLm)

Address: F0120H, F0121H (SOL0) After reset: 0000H R/W

Symbol	15	14	13	12	11	10	9	8	7	6	5	4	3	2	1	0
SOL0	0	0	0	0	0	0	0	0	0	0	0	0	0	0	SOL 01	SOL 00

Address: F0160H, F0161H (SOL1) After reset: 0000H R/W

Symbol	15	14	13	12	11	10	9	8	7	6	5	4	3	2	1	0
SOL1	0	0	0	0	0	0	0	0	0	0	0	0	0	0	SOL 11	SOL 10

SOL mn	Selects inversion of the level of the transmit data of channel n in UART mode
0	Communication data is output as is.
1	Communication data is inverted and output.

Caution Be sure to clear bits 15 to 2 of the SOL0 register and bits 15 to 2 of the SOL1 register to 0.

Remark m: Unit number (m = 0, 1), n: Channel number (n = 0, 1)

15.3.14 Serial slave select enable register m (SSEm)

The SSEm register controls the $\overline{\text{SSImn}}$ pin input of the channel during CSI communication and in slave mode.

While a high-level signal is being input to the $\overline{\text{SSImn}}$ pin, no transmission/reception operation is performed even if a serial clock is input. While a low-level signal is being input to the $\overline{\text{SSImn}}$ pin, a transmission/reception operation is performed according to each mode setting if a serial clock is input.

<R> Set the SSEm register by a 16-bit memory manipulation instruction.

Set the lower 8 bits of the SSEm register with an 8-bit memory manipulation instruction with SSEmL.

Reset signal generation clears the SSEm register to 0000H.

Cautions 1. Writing is prohibited other than during CSI communication and in slave mode.

2. Can be set only when the SAU is stopped (SEmn = 0).

Figure 15-17. Format of Serial Slave Select Enable Register m (SSEm)

Address: F0122H, F0123H (SSE0) After reset: 0000H R/W

Symbol	15	14	13	12	11	10	9	8	7	6	5	4	3	2	1	0
SSE0	0	0	0	0	0	0	0	0	0	0	0	0	0	0	SSE01	SSE00

Address: F0162H, F0163H (SSE1) After reset: 0000H R/W

Symbol	15	14	13	12	11	10	9	8	7	6	5	4	3	2	1	0
SSE1	0	0	0	0	0	0	0	0	0	0	0	0	0	0	SSE11	SSE10

SSEmn[Note]	Channel n $\overline{\text{SSImn}}$ input setting in CSI communication and slave mode
0	Disables $\overline{\text{SSImn}}$ pin input.
1	Enables $\overline{\text{SSImn}}$ pin input.

Note Set CKPmn bit of SCRmn register to 1, when SSEmn = 1.

Caution Be sure to clear bits 15 to 2 to 0.

Remark m: Unit number (m = 0, 1), n: Channel number (n = 0, 1)

15.3.15 Input switch control register (ISC)

The ISC0 bit of the ISC register is used to realize a LIN-bus communication operation by UART0. Set the ISC0 bit at the same time as setting the TIS17 and TIS16 bits in the TIS1 register (timer input select register 1).

When bit 0 is set to 1, the input signal of the serial data input (RxD0) pin is selected as an external interrupt (INTP0) that can be used to detect a wakeup signal by an INTP0 interrupt.

Set the ISC register by a 1-bit or 8-bit memory manipulation instruction.

Reset signal generation clears the ISC register to 00H.

Figure 15-18. Format of Input Switch Control Register (ISC)

Address: F0073H After reset: 00H R/W

Symbol	7	6	5	4	3	2	1	0
ISC	0	0	0	0	ISC3	ISC2	0	ISC0

ISC3	Switching external input (INTP12)
0	Uses the input signal of the INTP12 pin as an external interrupt input.
1	Uses the input signal of the LRxD1 pin as an external interrupt input.

ISC2	Switching external input (INTP11)
0	Uses the input signal of the INTP11 pin as an external interrupt input.
1	Uses the input signal of the LRxD0 pin as an external interrupt input.

ISC0	Switching external interrupt (INTP0) input
0	Uses the input signal of the INTP0 pin as an external interrupt (normal operation).
1	Uses the input signal of the RxD0 pin as an external interrupt (wakeup signal detection).

Caution Be sure to clear bits 7 to 4 and 1 to 0.

15.3.16 Noise filter enable register 0 (NFEN0)

The NFEN0 register is used to set whether the noise filter can be used for the input signal from the serial data input pin to each channel.

Disable the noise filter of the pin used for CSI or simplified I^2C communication, by clearing the corresponding bit of this register to 0.

Enable the noise filter of the pin used for UART communication, by setting the corresponding bit of this register to 1.

When the noise filter is enabled, CPU/peripheral hardware clock (f_{CLK}) is synchronized with 2-clock match detection.

When the noise filter is OFF, only synchronization is performed with the CPU/peripheral hardware clock (f_{MCK}) **Note**.

Set the NFEN0 register by a 1-bit or 8-bit memory manipulation instruction.

Reset signal generation clears the NFEN0 register to 00H.

Note For details, see **6.5.1 (2) When valid edge of input signal via the TImn pin is selected (CCSmn = 1)** and **6.5.2 Start timing of counter**.

Figure 15-19. Format of Noise Filter Enable Register 0 (NFEN0)

Address: F0070H After reset: 00H R/W

Symbol	7	6	5	4	3	2	1	0
NFEN0	0	0	0	0	0	SNFEN10 Note	0	SNFEN00

SNFEN10	Use of noise filter of RxD1 pin
0	Noise filter OFF
1	Noise filter ON
Set the SNFEN10 bit to 1 to use the RxD1 pin. Clear the SNFEN10 bit to 0 to use the other than RxD1 pin.	

SNFEN00	Use of noise filter of RxD0 pin
0	Noise filter OFF
1	Noise filter ON
Set the SNFEN00 bit to 1 to use the RxD0 pin. Clear the SNFEN00 bit to 0 to use the other than RxD0 pin.	

Note Not provided in the Group A products.

Caution Be sure to clear the following bits to 0.

- **Bits 7 to 1 in the Group A products**
- **Bits 7 to 3 and 1 in the products other than above**

15.3.17 Port input mode registers 1, 3, 5 to 7, 12 (PIM1, PIM3, PIM5 to PIM7, PIM12)

These registers set the input buffer of ports 1, 3, 5 to 7, and 12 in 1-bit units.

Set the PIM1, PIM3, PIM5 to PIM7, and PIM12 registers by a 1-bit or 8-bit memory manipulation instruction.

Reset signal generation clears the PIM1, PIM3, PIM5 to PIM7, and PIM12 registers to 00H.

Figure 15-20. Format of Port Input Mode Registers 1, 3, 5 to 7, and 12 (PIM1, PIM3, PIM5 to PIM7, PIM12)

Address F0041H After reset: 00H R/W

Symbol	7	6	5	4	3	2	1	0
PIM1	PIM17	PIM16	0	PIM14	PIM13	0	PIM11	PIM10

Address F0043H After reset: 00H R/W

Symbol	7	6	5	4	3	2	1	0
PIM3	0	0	0	0	0	0	0	PIM30

Address F0045H After reset: 00H R/W

Symbol	7	6	5	4	3	2	1	0
PIM5	0	0	0	PIM54	0	0	0	0

Address F0046H After reset: 00H R/W

Symbol	7	6	5	4	3	2	1	0
PIM6	0	0	0	0	PIM63	PIM62	0	0

Address F0047H After reset: 00H R/W

Symbol	7	6	5	4	3	2	1	0
PIM7	0	0	0	0	PIM73	0	PIM71	PIM70

Address F004CH After reset: 00H R/W

Symbol	7	6	5	4	3	2	1	0
PIM12	0	0	PIM125	0	0	0	0	0

PIMmn	Pmn pin input buffer selection (m = 1, 3, 5 to 7, 12; n = 0, to 7)
0	Normal input buffer
1	TTL input buffer

15.3.18 Port output mode registers 1, 6, 7, 12 (POM1, POM6, POM7, POM12)

These registers set the output mode of ports 1, 6, 7, and 12 in 1-bit units.

Set the POM1, POM6, POM7, and POM12 registers by a 1-bit or 8-bit memory manipulation instruction.

Reset signal generation clears the POM1, POM6, POM7, and POM12 registers to 00H.

Figure 15-21. Format of Port Output Mode Registers 1, 6, 7, and 12 (POM1, POM6, POM7, POM12)

Address F0051H After reset: 00H R/W

Symbol	7	6	5	4	3	2	1	0
POM1	POM17	POM16	POM15	POM14	POM13	POM12	POM11	POM10

Address F0056H After reset: 00H R/W

Symbol	7	6	5	4	3	2	1	0
POM6	0	0	0	0	POM63	POM62	POM61	POM60

Address F0057H After reset: 00H R/W

Symbol	7	6	5	4	3	2	1	0
POM7	0	0	0	0	0	POM72	POM71	POM70

Address F005CH After reset: 00H R/W

Symbol	7	6	5	4	3	2	1	0
POM12	0	0	0	0	0	0	0	POM120

POMmn	Pmn pin output buffer selection (m = 1, 6, 7, 12; n = 0 to 7)
0	Normal output mode
1	N-ch open-drain output (EV_{DD0} tolerance) mode

Caution Be sure to set bits for pins that are not present to their initial values.

15.3.19 Port mode registers 1, 3 to 7, 12 (PM1, PM3 to PM7, PM12)

These registers set input/output of ports1, 3 to 7, and 12 in 1-bit units.

When using the port (P12) to be shared with the serial data output pin or serial clock output pin for serial data output or serial clock output, set the bit in the port mode register (PMxx) corresponding to each port to 0. And set the bit in the port register (Pxx) corresponding to each port to 1

Example: When using P12/TI11/TO11/(TRDI0D0)/INTP5/SO10/TXD1/SNZOUT3 for serial data output or serial clock output

Set the PM12 bit of the port mode register 1 to 0.
Set the P12 bit of the port register 1 to 1.

When using the ports to be shared with the serial data input pin or serial clock input pin for serial data input or serial clock input, set the bit in the port mode register (PMxx) corresponding to each port to 1. At this time, the bit in the port register (Pxx) may be 0 or 1.

Example: When using P16/TI02/TO02/TRDI0C1/SI00/SDA00/RXD0/TOOLRXD for serial data input or serial clock input

Set the PM16 bit of port mode register 1 to 1.
Set the P16 bit of port register 1 to 0 or 1.

Set the PM1, PM3 to PM7, and PM12 registers by a 1-bit or 8-bit memory manipulation instruction.

Reset signal generation sets the PM1, PM3 to PM7, and PM12 registers to FFH.

<R> **Figure 15-22. Format of Port Mode Registers 1, 3 to 7, 12 (PM1, PM3 to PM7, PM12)**

<R> Address: FFF21H After reset: FFH R/W

Symbol	7	6	5	4	3	2	1	0
PM1	PM17	PM16	PM15	PM14	PM13	PM12	PM11	PM10

Address: FFF23H After reset: FFH R/W

Symbol	7	6	5	4	3	2	1	0
PM3	1	1	1	PM34	PM33	PM32	PM31	PM30

Address: FFF24H After reset: FFH R/W

Symbol	7	6	5	4	3	2	1	0
PM4	PM47	PM46	PM45	PM44	PM43	PM42	PM41	PM40

Address: FFF25H After reset: FFH R/W

Symbol	7	6	5	4	3	2	1	0
PM5	PM57	PM56	PM55	PM54	PM53	PM52	PM51	PM50

Address: FFF26H After reset: FFH R/W

Symbol	7	6	5	4	3	2	1	0
PM6	PM67	PM66	PM65	PM64	PM63	PM62	PM61	PM60

Address: FFF27H After reset: FFH R/W

Symbol	7	6	5	4	3	2	1	0
PM7	PM77	PM76	PM75	PM74	PM73	PM72	PM71	PM70

<R> Address: FFF2CH After reset: FFH R/W

Symbol	7	6	5	4	3	2	1	0
PM12	PM127	PM126	PM125	1	1	1	1	PM120

PMmn	Pmn pin I/O mode selection (m = 1, 3 to 7, 12; n = 0 to 7)
0	Output mode (output buffer on)
1	Input mode (output buffer off)

15.4 Operation stop mode

Each serial interface of serial array unit has the operation stop mode.
In this mode, serial communication cannot be executed, thus reducing the power consumption.
In addition, the pin for serial interface can be used as port function pins in this mode.

15.4.1 Stopping the operation by units

The stopping of the operation by units is set by using peripheral enable register 0 (PER0).

The PER0 register is used to enable or disable supplying the clock to the peripheral hardware. Clock supply to a hardware macro that is not used is stopped in order to reduce the power consumption and noise.

To stop the operation of serial array unit 0, set bit 2 (SAU0EN) to 0.

To stop the operation of serial array unit 1, set bit 3 (SAU1EN) to 0.

Figure 15-23. Peripheral Enable Register 0 (PER0) Setting When Stopping the Operation by Units

(a) Peripheral enable register 0 (PER0) … Set only the bit of SAUm to be stopped to 0.

	7	6	5	4	3	2	1	0
PER0	RTCEN	0	ADCEN	IICA0EN	SAU1EN	SAU0EN	TAU1EN	TAU0EN
	×		×	×	0/1	0/1	×	×

Control of SAUm input clock
0: Stops supply of input clock
1: Supplies input clock

Cautions 1. If SAUmEN = 0, writing to a control register of serial array unit m is ignored, and, even if the register is read, only the default value is read
Note that this does not apply to the following registers.
- **Input switch control register (ISC)**
- **Noise filter enable register 0 (NFEN0)**
- **Port input mode registers 1, 3, 5 to 7, 12 (PIM1, PIM3, PIM5 to PIM7, PIM12)**
- **Port output mode registers 1, 6, 7, 12 (POM1, POM6, POM7, POM12)**
- **Port mode registers 1, 3 to 7, 12 (PM1, PM3 to PM7, PM12)**
- **Port registers 1, 3 to 7, 12 (P1, P3 to P7, P12)**

2. Be sure to clear the following bits to 0.
Bits 1, 3, 4, and 6 in the RL78/F13 (LIN incorporated) products with 20, 30, 32, 48, or 64 pins and 16 Kbytes to 64 Kbytes of code flash memory
Bits 4 and 6 in 30-pin products of the RL78/F13 (CAN and LIN incorporated) and in 30-pin products of the RL78/F14
Bit 6 in the products other than above

Remark ×: Bits not used with serial array units (depending on the settings of other peripheral functions)
0/1: Set to 0 or 1 depending on the usage of the user
m: Unit number (m = 0, 1)

15.4.2 Stopping the operation by channels

The stopping of the operation by channels is set using each of the following registers.

Figure 15-24. Each Register Setting When Stopping the Operation by Channels (1/2)

(a) Serial channel stop register m (STm) … This register is a trigger register that is used to enable stopping communication/count by each channel.

	15	14	13	12	11	10	9	8	7	6	5	4	3	2	1	0
STm	0	0	0	0	0	0	0	0	0	0	0	0	0	0	STm1 0/1	STm0 0/1

1: Clears the SEmn bit to 0 and stops the communication operation

* Because the STmn bit is a trigger bit, it is cleared immediately when SEmn = 0.

(b) Serial channel enable status register m (SEm) … This register indicates whether data transmission/reception operation of each channel is enabled or stopped.

	15	14	13	12	11	10	9	8	7	6	5	4	3	2	1	0
SEm	0	0	0	0	0	0	0	0	0	0	0	0	0	0	SEm1 0/1	SEm0 0/1

0: Operation stops

* The SEmn register is a read-only status register, whose operation is stopped by using the STm register. With a channel whose operation is stopped, the value of the CKOmn bit of the SOm register can be set by software.

(c) Serial output enable register m (SOEm) … This register is a register that is used to enable or stop output of the serial communication operation of each channel.

	15	14	13	12	11	10	9	8	7	6	5	4	3	2	1	0
SOEm	0	0	0	0	0	0	0	0	0	0	0	0	0	0	SOEm1 0/1	SOEm0 0/1

0: Stops output by serial communication operation

* For channel n, whose serial output is stopped, the SOmn bit value of the SOm register can be set by software.

(d) Serial output register m (SOm) …This register is a buffer register for serial output of each channel.

	15	14	13	12	11	10	9	8	7	6	5	4	3	2	1	0
SOm	0	0	0	0	0	0	CKOm1 0/1	CKOm0 0/1	0	0	0	0	0	0	SOm1 0/1	SOm0 0/1

1: Serial clock output value is 1 1: Serial data output value is 1

* When using pins corresponding to each channel as port function pins, set the corresponding CKOmn, SOmn bits to 1.

Remarks 1. m: Unit number (m = 0, 1), n: Channel number (n = 0, 1)

2. ▒ : Setting disabled (set to the initial value)

0/1: Set to 0 or 1 depending on the usage of the user

Figure 15-24. Each Register Setting When Stopping the Operation by Channels (2/2)

(e) Serial slave select enable register (SSEm) … This register controls the $\overline{\text{SSImn}}$ pin in each slave channel.

	15	14	13	12	11	10	9	8	7	6	5	4	3	2	1	0
SSEm	0	0	0	0	0	0	0	0	0	0	0	0	0	0	SSEm1 0/1	SSEm0 0/1

0: Disables the input value of the $\overline{\text{SSImn}}$ pin

Remarks 1. m: Unit number (m = 0, 1), n: Channel number (n = 0, 1)

2. ☐ : Setting disabled (set to the initial value)

0/1: Set to 0 or 1 depending on the usage of the user

15.5 Operation of 3-Wire Serial I/O (CSI00, CSI01, CSI10, CSI11) Communication

This is a clocked communication function that uses three lines: serial clock ($\overline{SCK}$) and serial data (SI and SO) lines.

[Data transmission/reception]

- Data length of 7 to 16 bits
- Phase control of transmit/receive data
- MSB/LSB first selectable
- Level setting of transmit/receive data

[Clock control]

- Master/slave selection
- Phase control of I/O clock
- Setting of transfer period by prescaler and internal counter of each channel
- Maximum transfer rate

  During master communication: Max. $f_{MCK}/4$ **Note**

  During slave communication: Max. $f_{MCK}/6$ **Note**

[Interrupt function]

- Transfer end interrupt/buffer empty interrupt

[Error detection flag]

- Overrun error

<R> In addition, CSI00, CSI01, CSI10, and CSI11 support the slave select input function. For details, refer to **15.6 Clock Synchronous Serial Communication with SPI Function**.

Note Use the clocks within a range satisfying the $\overline{SCK}$ cycle time (t_{KCY}) characteristics (see **CHAPTER 34** to **CHAPTER 36 ELECTRICAL SPECIFICATIONS**).

The channels supporting 3-wire serial I/O (CSI00, CSI01, CSI10, CSI11) are channels 0 and 1 of SAU0 and channels 0 and 1 of SAU1.

- Group A products

Unit	Channel	Used as CSI	Used as UART	Used as Simplified I^2C
0	0	CSI00 (supporting SPI function) Note2	UART0 (supporting LIN-bus)	IIC00
	1	CSI01 (supporting SPI function) Note2		IIC01

- Products of Groups C-1 and D-1

Unit	Channel	Used as CSI	Used as UART	Used as Simplified I^2C
0	0	CSI00 (supporting SPI function) Note2	UART0 (supporting LIN-bus)	IIC00
	1	CSI01 (supporting SPI function) Note2		IIC01
1	0	CSI10 (supporting SPI function) Note1, 2	UART1	IIC10
	1	-		-

- Products of Groups B, C-2, D-2, and E

Unit	Channel	Used as CSI	Used as UART	Used as Simplified I^2C
0	0	CSI00 (supporting SPI function) Note2	UART0 (supporting LIN-bus)	IIC00
	1	CSI01 (supporting SPI function) Note2		IIC01
1	0	CSI10 (supporting SPI function) Note1, 2	UART1	IIC10
	1	CSI11 (supporting SPI function) Note2		IIC11

Notes 1. 48-pin, 32-pin and 30-pin products do not have $\overline{SSI10}$ pin.

2. Set CKPmn bit of SCRmn register to 1, when SSEmn = 1 (Enables $\overline{SSImn}$ pin input).
(m = 0, 1, n = 0, 1)

Remark Group A: RL78/F13 (LIN incorporated) products with 20, 30, 32, 48, or 64 pins and 16 Kbytes to 64 Kbytes of code flash memory
Group B: RL78/F13 (LIN incorporated) products with 48 or 64 pins and 96 Kbytes to 128 Kbytes of code flash memory or with 80 pins and 64 Kbytes to 128 Kbytes of code flash memory
Group C-1: RL78/F13 (CAN and LIN incorporated) products with 30 or 32 pins
Group C-2: RL78/F13 (CAN and LIN incorporated) products with 48, 64, or 80 pins
Group D-1: RL78/F14 products with 30 or 32 pins
Group D-2: RL78/F14 products with 48, 64, or 80 pins and 48 Kbytes to 96 Kbytes of code flash memory
Group E: RL78/F14 products with 48, 64, or 80 pins and 128 Kbytes to 256 Kbytes of code flash memory or with 100 pins and 64 Kbytes to 256 Kbytes of code flash memory

3-wire serial I/O (CSI00, CSI01, CSI10, CSI11) performs the following six types of communication operations.

- Master transmission (See **15.5.1 Master transmission**.)
- Master reception (See **15.5.2 Master reception**.)
- Master transmission/reception (See **15.5.3 Master transmission/reception**.)
- Slave transmission (See **15.5.4 Slave transmission**.)
- Slave reception (See **15.5.5 Slave reception**.)
- Slave transmission/reception (See **15.5.6 Slave transmission/reception**.)

15.5.1 Master transmission

Master transmission is an operation wherein this MCU outputs a transfer clock and transmits data to another device.

3-Wire Serial I/O	CSI00	CSI01	CSI10	CSI11
Target channel	Channel 0 of SAU0	Channel 1 of SAU0	Channel 0 of SAU1	Channel 1 of SAU1
Pins used	$\overline{\text{SCK00}}$, SO00	$\overline{\text{SCK01}}$, SO01	$\overline{\text{SCK10}}$, SO10	$\overline{\text{SCK11}}$, SO11
Interrupt	INTCSI00	INTCSI01	INTCSI10	INTCSI11
	Transfer end interrupt (in single-transfer mode) or buffer empty interrupt (in continuous transfer mode) can be selected.			
Error detection flag	None			
Transfer data length	7 to 16 bits			
Transfer rate	Max. $f_{MCK}/4$ [Hz] Min. $f_{CLK}/(2 \times 2^{11} \times 128)$ [Hz] Note f_{CLK}: System clock frequency			
Data phase	Selectable by the DAPmn bit of the SCRmn register • DAPmn = 0: Data output starts from the start of the serial clock operation. • DAPmn = 1: Data output starts half a clock before the start of the serial clock operation.			
Clock phase	Selectable by the CKPmn bit of the SCRmn register • CKPmn = 0: Forward • CKPmn = 1: Reverse			
Data direction	MSB or LSB first			

Note Use this operation within a range that satisfies the conditions above and the AC characteristics in the electrical specifications.

Remark m: Unit number (m = 0, 1), n: Channel number (n = 0, 1), mn = 00, 01, 10, 11

(1) Register setting

Figure 15-25. Example of Contents of Registers for Master Transmission of 3-Wire Serial I/O (CSI00, CSI01, CSI10, CSI11) (1/2)

(a) Serial mode register mn (SMRmn)

	15	14	13	12	11	10	9	8	7	6	5	4	3	2	1	0
SMRmn	CKSmn 0/1	CCSmn 0	0	0	0	0	0	STSmn 0	0	SISmn0 0	1	0	0	MDmn2 0	MDmn1 0	MDmn0 0/1

Operation clock (f_{MCK}) of channel n
0: Prescaler output clock CKm0 set by the SPSm register
1: Prescaler output clock CKm1 set by the SPSm register

Interrupt source of channel n
0: Transfer end interrupt
1: Buffer empty interrupt

(b) Serial communication operation setting register mn (SCRmn)

	15	14	13	12	11	10	9	8	7	6	5	4	3	2	1	0
SCRmn	TXEmn 1	RXEmn 0	DAPmn 0/1	CKPmn 0/1	0	0	PTCmn1 0	PTCmn0 0	DIRmn 0/1	0	SLCmn1 0	SLCmn0 0	DLSmn3 0/1	DLSmn2 0/1	DLSmn1 0/1	DLSmn0 0/1

Selection of the data and clock phase (For details about the setting, see **15.3 Registers Controlling Serial Array Unit**.)

Selection of data transfer sequence
0: Inputs/outputs data with MSB first
1: Inputs/outputs data with LSB first.

Setting of data length

(c) Serial data register mn (SDRmn)

(1) When operation is stopped (SEmn = 0)

	15	14	13	12	11	10	9	8	7	6	5	4	3	2	1	0
SDRmn	Baud rate setting (division setting of operation clock (f_{MCK})							0	0	0	0	0	0	0	0	0

(2) When operation is in progress (SEmn = 1) (Lower 8 bits: SDRpL)

	15	14	13	12	11	10	9	8	7	6	5	4	3	2	1	0
SDRmn	Transmit data setting															

SDRpL

(d) Serial output register m (SOm) … Sets only the bits of the target channel.

	15	14	13	12	11	10	9	8	7	6	5	4	3	2	1	0
SOm	0	0	0	0	0	0	CKOm1 0/1	CKOm0 0/1	0	0	0	0	0	0	SOm1 0/1	SOm0 0/1

Communication starts when these bits are 1 if the clock phase is forward (the CKPmn bit of the SCRmn = 0). If the clock phase is reversed (CKPmn = 1), communication starts when these bits are 0.

Remarks 1. m: Unit number (m = 0, 1), n: Channel number (n = 0, 1), p: CSI number (p = 00, 01, 10, 11), mn = 00, 01, 10, 11

2. ☐ : Setting is fixed in the CSI master transmission mode, ▒ : Setting disabled (set to the initial value)
0/1: Set to 0 or 1 depending on the usage of the user

Figure 15-25. Example of Contents of Registers for Master Transmission of 3-Wire Serial I/O (CSI00, CSI01, CSI10, CSI11) (2/2)

(e) Serial output enable register m (SOEm) … Sets only the bits of the target channel to 1.

	15	14	13	12	11	10	9	8	7	6	5	4	3	2	1	0
SOEm	0	0	0	0	0	0	0	0	0	0	0	0	0	0	SOEm1 0/1	SOEm0 0/1

(f) Serial channel start register m (SSm) … Sets only the bits of the target channel to 1.

	15	14	13	12	11	10	9	8	7	6	5	4	3	2	1	0
SSm	0	0	0	0	0	0	0	0	0	0	0	0	0	0	SSm1 0/1	SSm0 0/1

Remarks 1. m: Unit number (m = 0, 1), n: Channel number (n = 0, 1), p: CSI number (p = 00, 01, 10, 11), mn = 00, 01, 10, 11

2. ☐ : Setting is fixed in the CSI master transmission mode, ▒ : Setting disabled (set to the initial value)
0/1: Set to 0 or 1 depending on the usage of the user

(2) Operation procedure

Figure 15-26. Initial Setting Procedure for Master Transmission

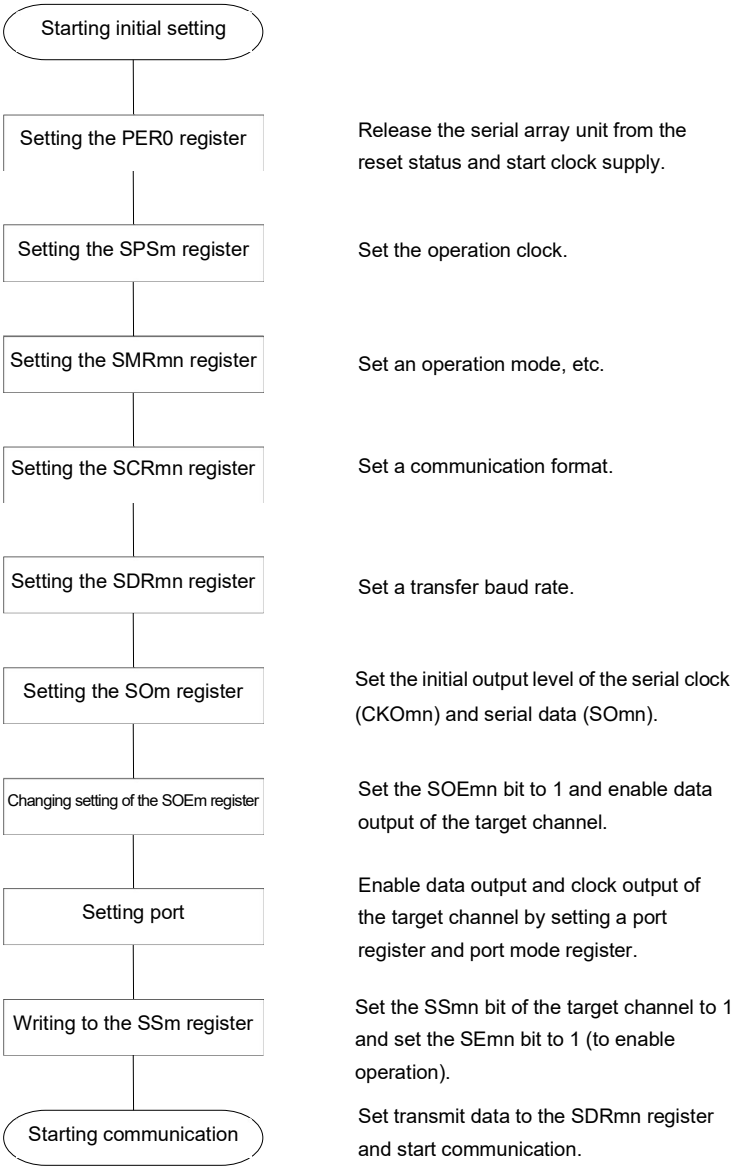

Remark m: Unit number (m = 0, 1), n: Channel number (n = 0, 1), mn = 00, 01, 10, 11

Figure 15-27. Procedure for Stopping Master Transmission

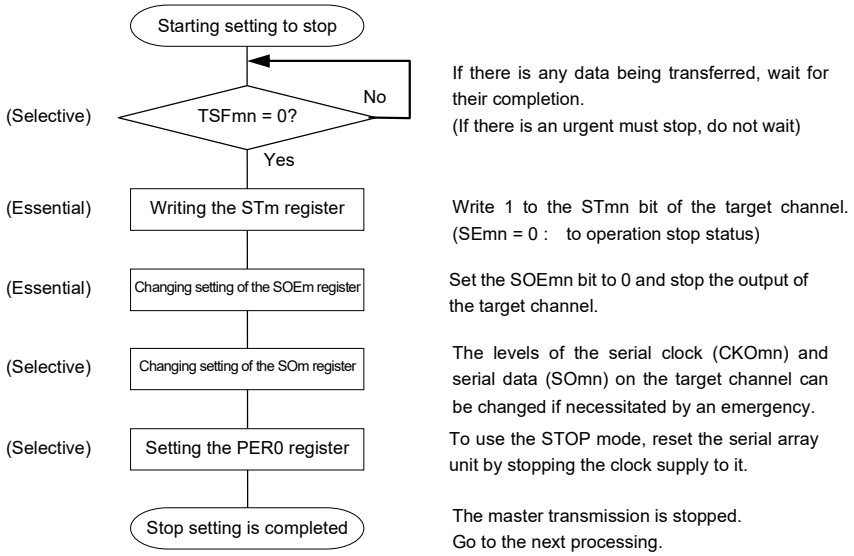

Remark m: Unit number (m = 0, 1), n: Channel number (n = 0, 1), mn = 00, 01, 10, 11

Figure 15-28. Procedure for Resuming Master Transmission

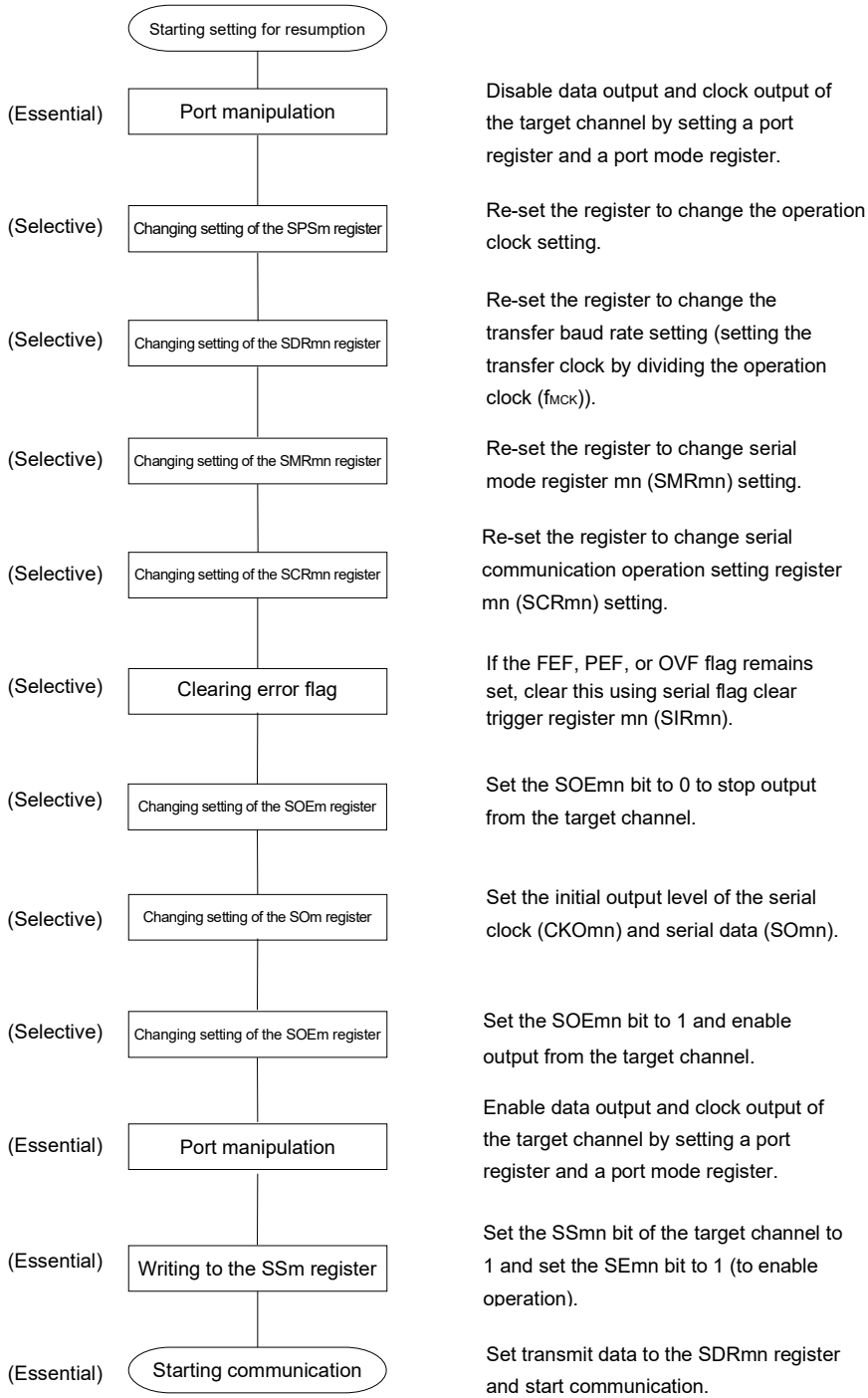

Remark m: Unit number (m = 0, 1), n: Channel number (n = 0, 1), mn = 00, 01, 10, 11

(3) Processing flow (in single-transmission mode)

Figure 15-29. Timing Chart of Master Transmission (in Single-Transmission Mode)
(Type 1: DAPmn = 0, CKPmn = 0)

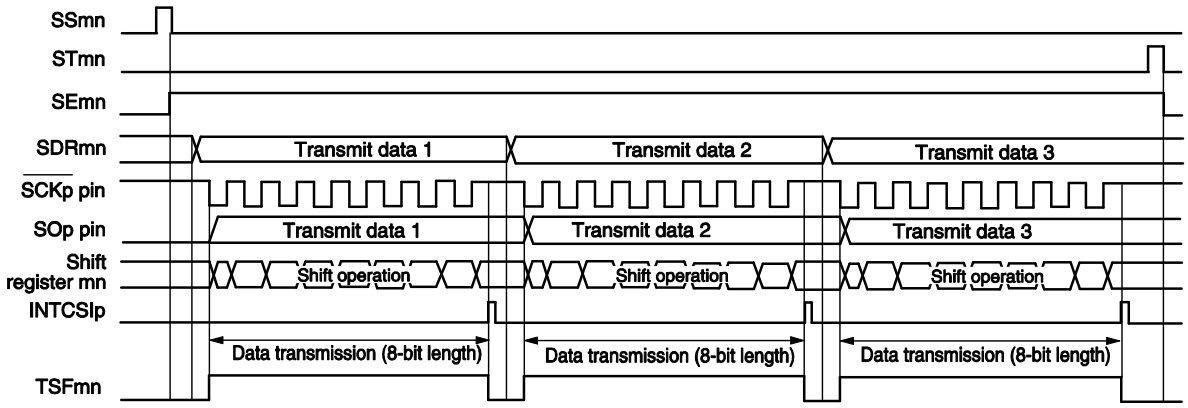

Remark m: Unit number (m = 0, 1), n: Channel number (n = 0, 1), p: CSI number (p = 00, 01, 10, 11), mn = 00, 01, 10, 11

Figure 15-30. Flowchart of Master Transmission (in Single-Transmission Mode)

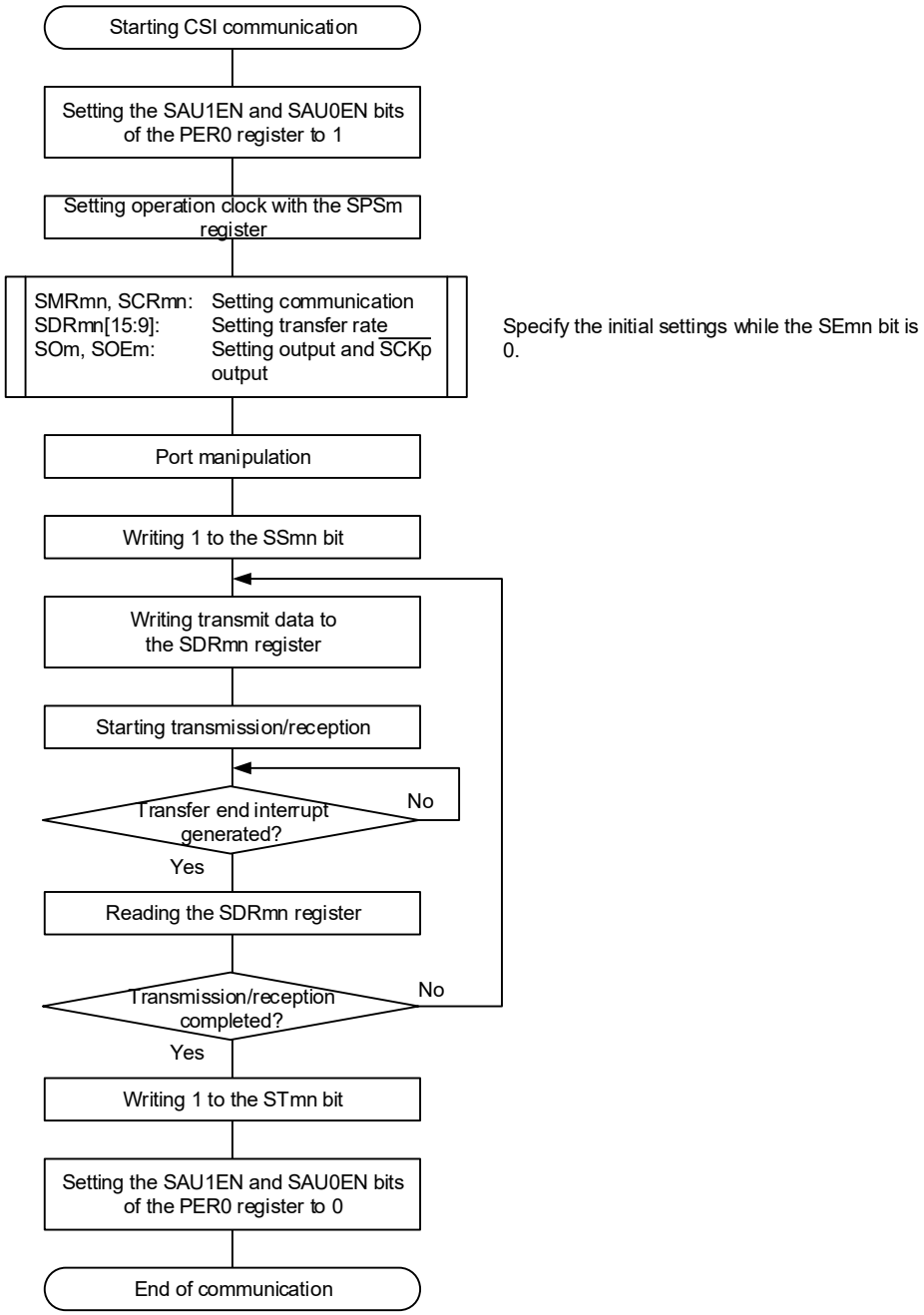

Remark m: Unit number (m = 0, 1), n: Channel number (n = 0, 1), mn = 00, 01, 10, 11

(4) Processing flow (in continuous transmission mode)

Figure 15-31. Timing Chart of Master Transmission (in Continuous Transmission Mode)
(Type 1: DAPmn = 0, CKPmn = 0)

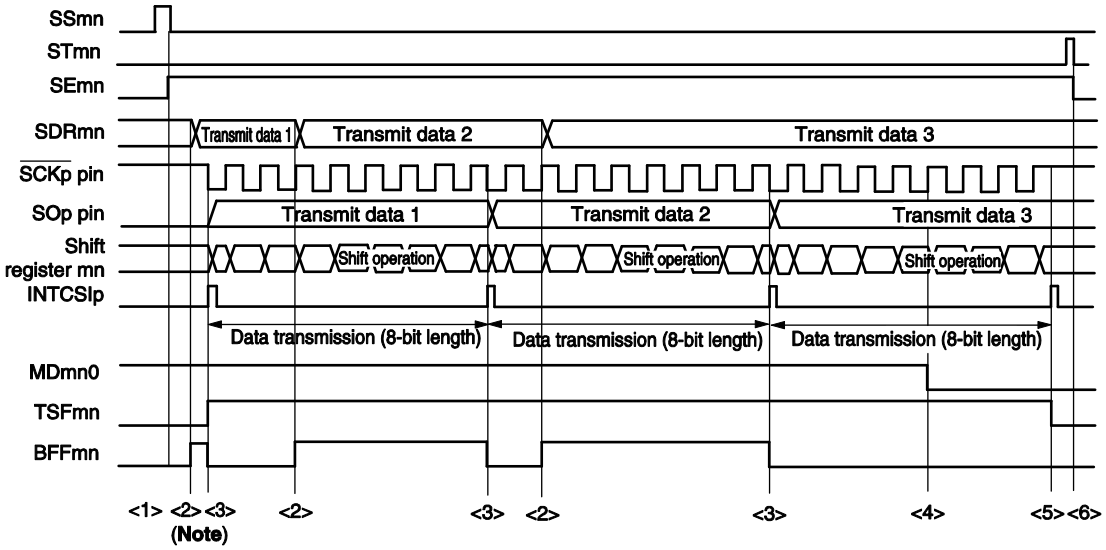

Note If transmit data is written to the SDRmn register while the BFFmn bit of serial status register mn (SSRmn) is 1 (valid data is stored in serial data register mn (SDRmn)), the transmit data is overwritten.

Caution **The MDmn0 bit of serial mode register mn (SMRmn) can be rewritten even during operation. However, rewrite it before transfer of the last bit is started, so that it will be rewritten before the transfer end interrupt of the last transmit data.**

Remark m: Unit number (m = 0, 1), n: Channel number (n = 0, 1), p: CSI number (p = 00, 01, 10, 11), mn = 00, 01, 10, 11

Figure 15-32. Flowchart of Master Transmission (in Continuous Transmission Mode)

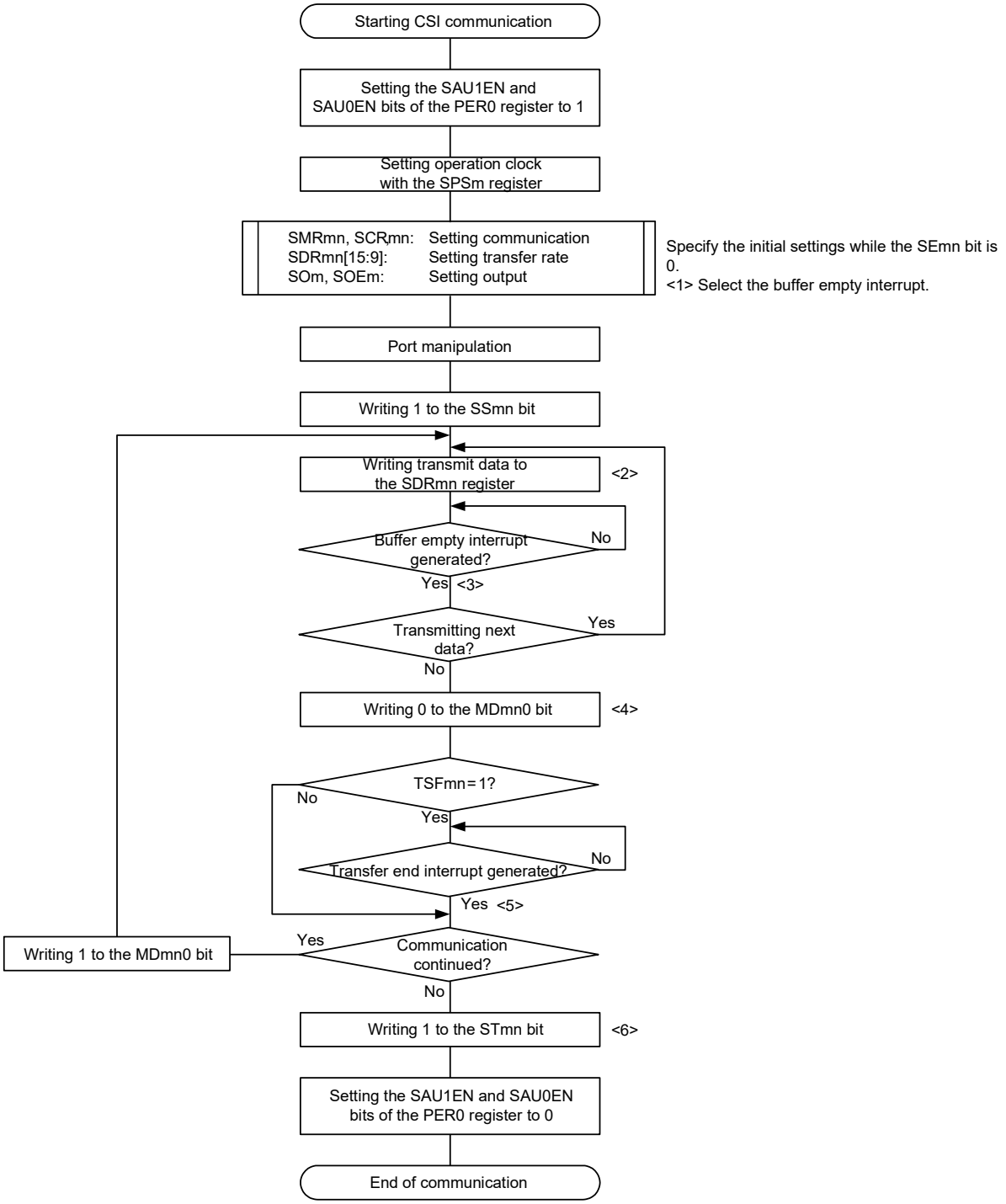

Remarks 1. <1> to <6> in the figure correspond to <1> to <6> in **Figure 15-31 Timing Chart of Master Transmission (in Continuous Transmission Mode)**.

2. m: Unit number (m = 0, 1), n: Channel number (n = 0, 1), mn = 00, 01, 10, 11

15.5.2 Master reception

Master reception is an operation wherein this MCU outputs a transfer clock and receives data from other device.

3-Wire Serial I/O	CSI00	CSI01	CSI10	CSI11
Target channel	Channel 0 of SAU0	Channel 1 of SAU0	Channel 0 of SAU1	Channel 1 of SAU1
Pins used	$\overline{\text{SCK00}}$, SI00	$\overline{\text{SCK01}}$, SI01	$\overline{\text{SCK10}}$, SI10	$\overline{\text{SCK11}}$, SI11
Interrupt	INTCSI00	INTCSI01	INTCSI10	INTCSI11
	Transfer end interrupt (in single-transfer mode) or buffer empty interrupt (in continuous transfer mode) can be selected.			
Error detection flag	Overrun error detection flag (OVFmn) only			
Transfer data length	7 to 16 bits			
Transfer rate	Max. $f_{MCK}/4$ [Hz] Min. $f_{CLK}/(2 \times 2^{11} \times 128)$ [Hz]**Note** f_{CLK}: System clock frequency			
Data phase	Selectable by the DAPmn bit of the SCRmn register • DAPmn = 0: Data input starts from the start of the serial clock operation. • DAPmn = 1: Data input starts half a clock before the start of the serial clock operation.			
Clock phase	Selectable by the CKPmn bit of the SCRmn register • CKPmn = 0: Forward • CKPmn = 1: Reverse			
Data direction	MSB or LSB first			

Note Use this operation within a range that satisfies the conditions above and the AC characteristics in the electrical specifications.

Remark m: Unit number (m = 0, 1), n: Channel number (n = 0, 1), mn = 00, 01, 10, 11

(1) Register setting

Figure 15-33. Example of Contents of Registers for Master Reception of 3-Wire Serial I/O (CSI00, CSI01, CSI10, CSI11) (1/2)

(a) Serial mode register mn (SMRmn)

	15	14	13	12	11	10	9	8	7	6	5	4	3	2	1	0
SMRmn	CKSmn 0/1	CCSmn 0	0	0	0	0	0	STSmn 0	0	SISmn0 0	1	0	0	MDmn2 0	MDmn1 0	MDmn0 0/1

Operation clock (f_{MCK}) of channel n
0: Prescaler output clock CKm0 set by the SPSm register
1: Prescaler output clock CKm1 set by the SPSm register

Interrupt source of channel n
0: Transfer end interrupt
1: Buffer empty interrupt

(b) Serial communication operation setting register mn (SCRmn)

	15	14	13	12	11	10	9	8	7	6	5	4	3	2	1	0
SCRmn	TXEmn 0	RXEmn 1	DAPmn 0/1	CKPmn 0/1	0	0	PTCmn1 0	PTCmn0 0	DIRmn 0/1	0	SLCmn1 0	SLCmn0 0	DLSmn3 0/1	DLSmn2 0/1	DLSmn1 0/1	DLSmn0 0/1

Selection of the data and clock phase (For details about the setting, see **15.3 Registers Controlling Serial Array Unit**.)

Selection of data transfer sequence
0: Inputs/outputs data with MSB first
1: Inputs/outputs data with LSB first.

Setting of data length

(c) Serial data register mn (SDRmn)

(1) When operation is stopped (SEmn = 0)

	15	14	13	12	11	10	9	8	7	6	5	4	3	2	1	0
SDRmn	Baud rate setting (division setting of operation clock (f_{MCK})							0	0	0	0	0	0	0	0	0

(2) When operation is in progress (SEmn = 1) (Lower 8 bits: SDRpL)

	15	14	13	12	11	10	9	8	7	6	5	4	3	2	1	0
SDRmn	Receive data (Write FFH as dummy data.)															

SDRpL

(d) Serial output register m (SOm) … Sets only the bits of the target channel.

	15	14	13	12	11	10	9	8	7	6	5	4	3	2	1	0
SOm	0	0	0	0	0	0	CKOm1 0/1	CKOm0 0/1	0	0	0	0	0	0	SOm1 ×	SOm0 ×

Communication starts when these bits are 1 if the clock phase is forward (the CKPmn bit of the SCRmn = 0). If the clock phase is reversed (CKPmn = 1), communication starts when these bits are 0.

Remarks 1. m: Unit number (m = 0, 1), n: Channel number (n = 0, 1), p: CSI number (p = 00, 01, 10, 11), mn = 00, 01, 10, 11

2. ☐: Setting is fixed in the CSI master reception mode, ▒: Setting disabled (set to the initial value)
×: Bit that cannot be used in this mode (set to the initial value when not used in any mode)
0/1: Set to 0 or 1 depending on the usage of the user

Figure 15-33. Example of Contents of Registers for Master Reception of 3-Wire Serial I/O (CSI00, CSI01, CSI10, CSI11) (2/2)

(e) Serial output enable register m (SOEm) …The register that not used in this mode.

	15	14	13	12	11	10	9	8	7	6	5	4	3	2	1	0
SOEm	0	0	0	0	0	0	0	0	0	0	0	0	0	0	SOEm1 ×	SOEm0 ×

(f) Serial channel start register m (SSm) … Sets only the bits of the target channel to 1.

	15	14	13	12	11	10	9	8	7	6	5	4	3	2	1	0
SSm	0	0	0	0	0	0	0	0	0	0	0	0	0	0	SSm1 0/1	SSm0 0/1

Remarks 1. m: Unit number (m = 0, 1), n: Channel number (n = 0, 1), p: CSI number (p = 00, 01, 10, 11), mn = 00, 01, 10, 11

2. ☐ : Setting is fixed in the CSI master reception mode, ▒ : Setting disabled (set to the initial value)
×: Bit that cannot be used in this mode (set to the initial value when not used in any mode)
0/1: Set to 0 or 1 depending on the usage of the user

(2) Operation procedure

Figure 15-34. Initial Setting Procedure for Master Reception

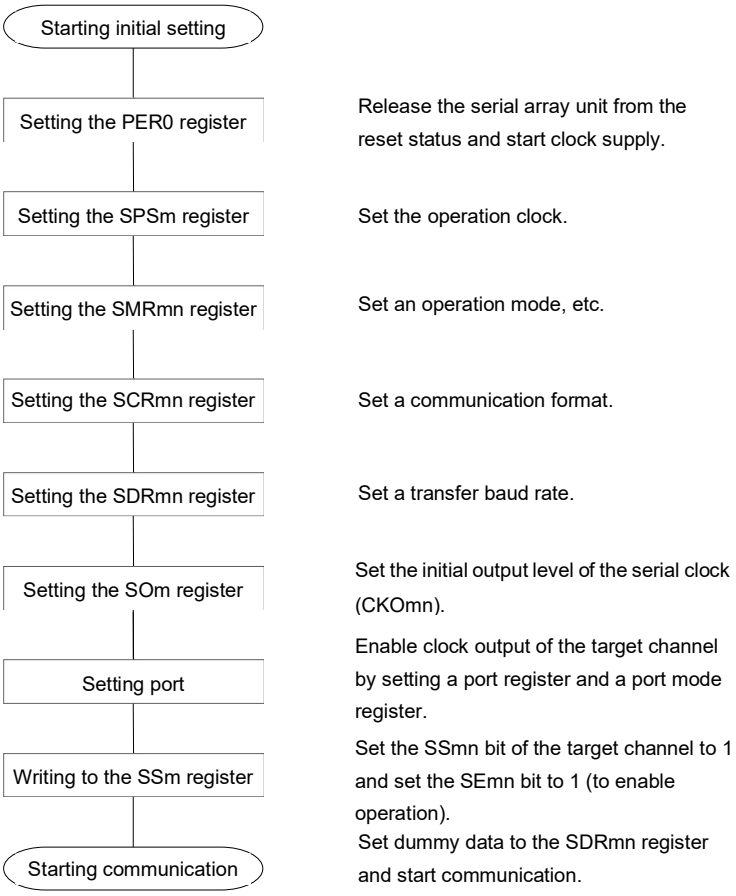

Figure 15-35. Procedure for Stopping Master Reception

Remarks 1. Even after communication is stopped, the pin level is retained. To resume the operation, re-set serial output register m (SOm) (see **Figure 15-36 Procedure for Resuming Master Reception**).

2. m: Unit number (m = 0, 1), n: Channel number (n = 0, 1), mn = 00, 01, 10, 11

Figure 15-36. Procedure for Resuming Master Reception

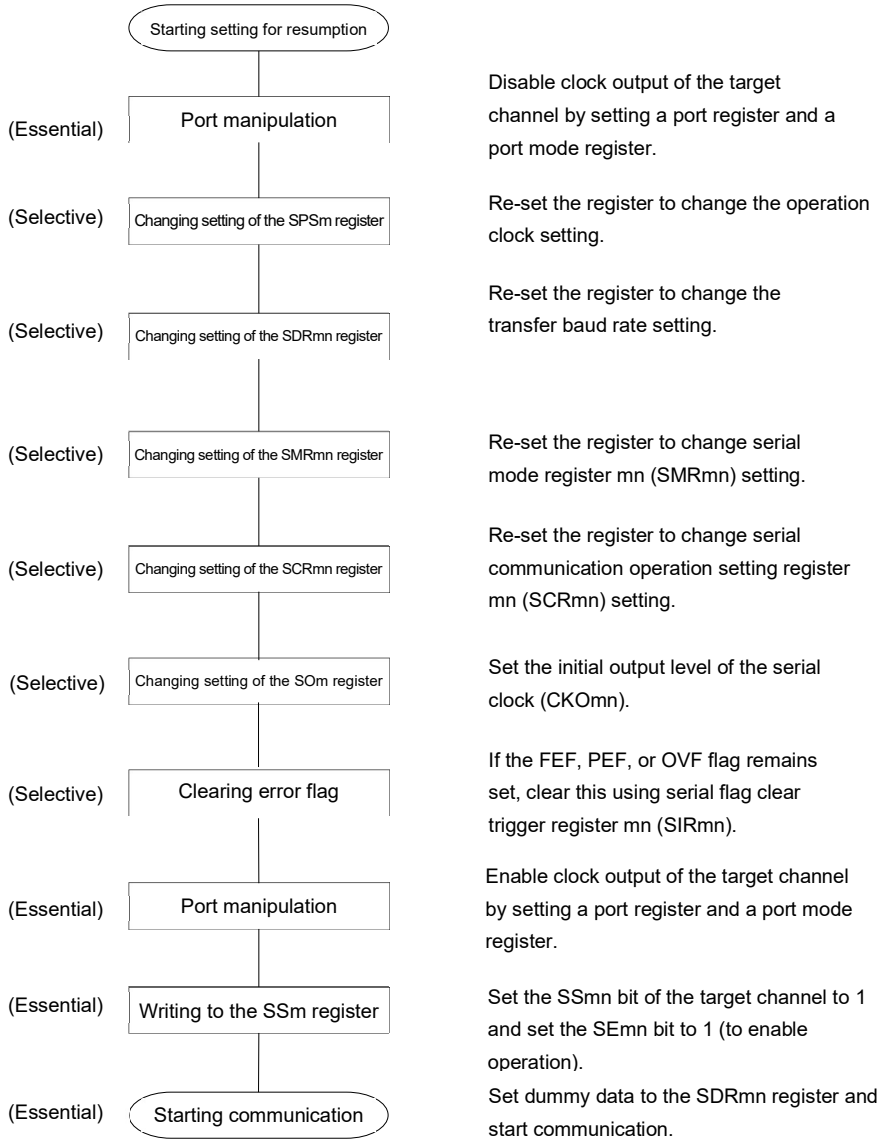

Remark m: Unit number (m = 0, 1), n: Channel number (n = 0, 1), mn = 00, 01, 10, 11

(3) Processing flow (in single-reception mode)

Figure 15-37. Timing Chart of Master Reception (in Single-Reception Mode)
(Type 1: DAPmn = 0, CKPmn = 0)

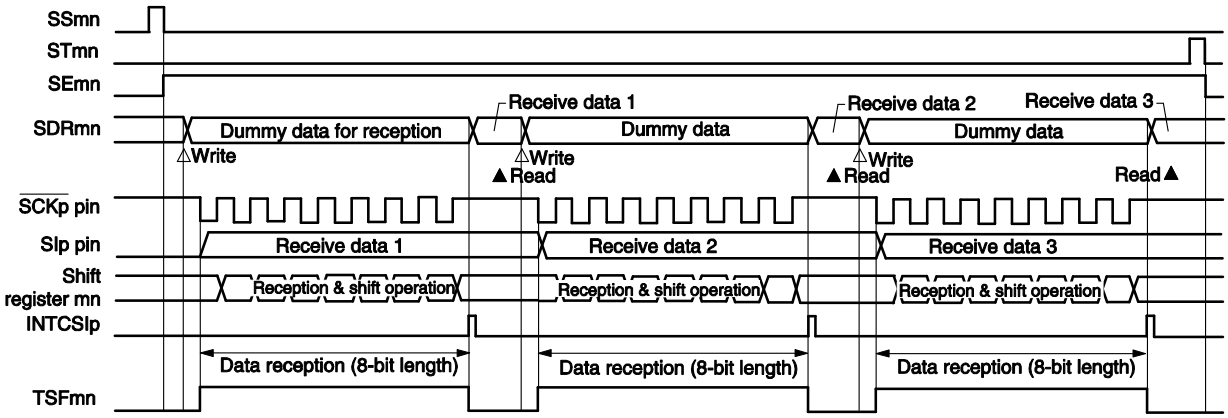

Remark m: Unit number (m = 0, 1), n: Channel number (n = 0, 1), p: CSI number (p = 00, 01, 10, 11), mn = 00, 01, 10, 11

Figure 15-38. Flowchart of Master Reception (in Single-Reception Mode)

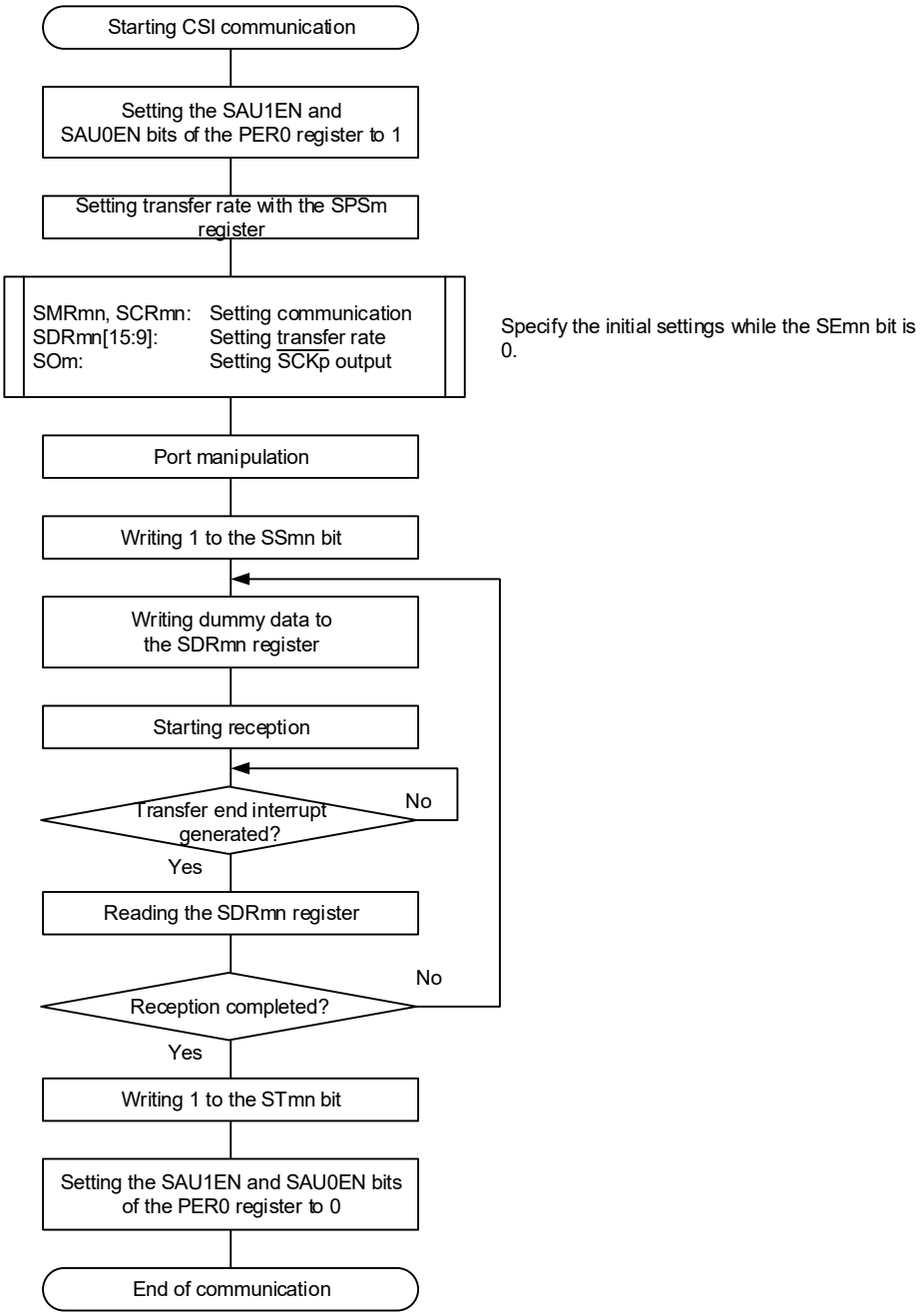

Remark m: Unit number (m = 0, 1), n: Channel number (n = 0, 1), p: CSI number (p = 00, 01, 10, 11), mn = 00, 01, 10, 11

(4) Processing flow (in continuous reception mode)

Figure 15-39. Timing Chart of Master Reception (in Continuous Reception Mode) (Type 1: DAPmn = 0, CKPmn = 0)

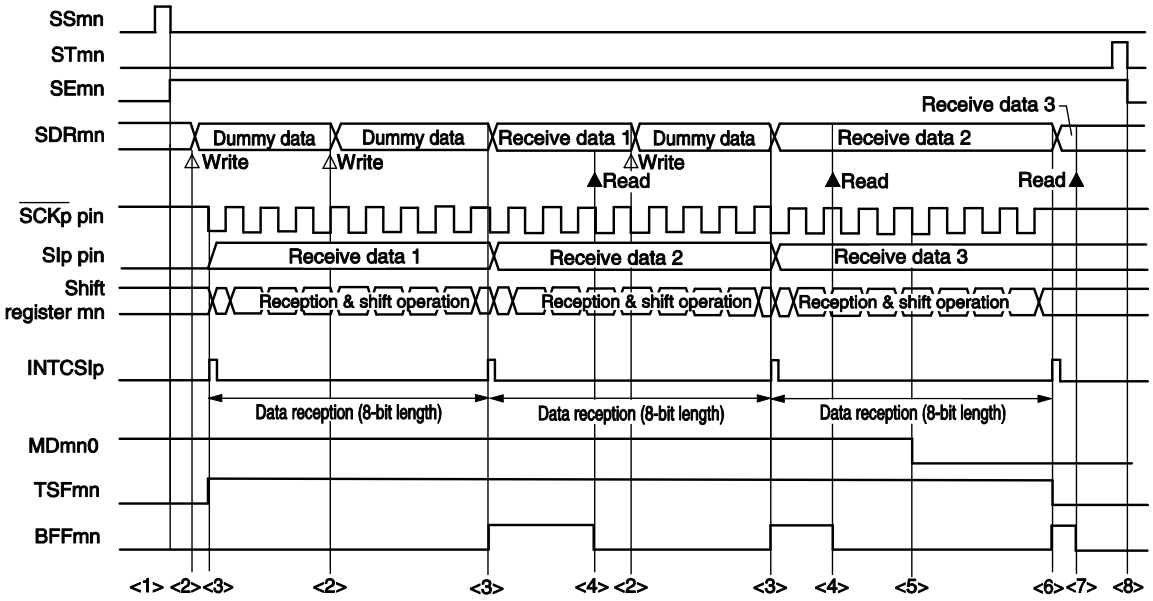

Caution The MDmn0 bit can be rewritten even during operation.
However, rewrite it before receive of the last bit is started, so that it has been rewritten before the transfer end interrupt of the last receive data.

Remarks 1. <1> to <8> in the figure correspond to <1> to <8> in **Figure 15-40 Flowchart of Master Reception (in Continuous Reception Mode)**.

2. m: Unit number (m = 0, 1), n: Channel number (n = 0, 1), p: CSI number (p = 00, 01, 10, 11), mn = 00, 01, 10, 11

Figure 15-40. Flowchart of Master Reception (in Continuous Reception Mode)

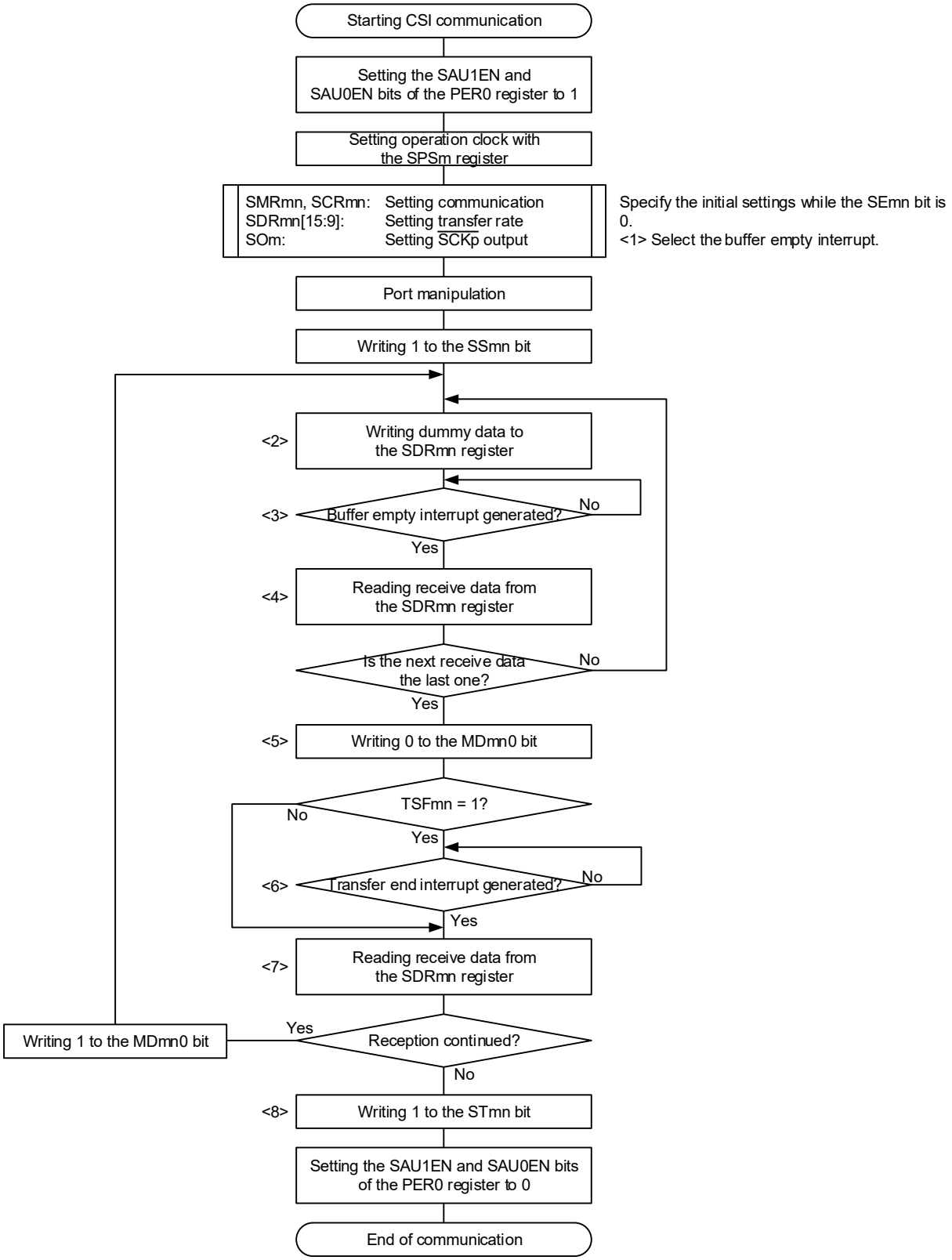

(**Caution** and **Remarks** are listed on the next page.)

Remarks 1. <1> to <8> in the figure correspond to <1> to <8> in **Figure 15-39 Timing Chart of Master Reception (in Continuous Reception Mode)**.

2. m: Unit number (m = 0, 1), n: Channel number (n = 0, 1), p: CSI number (p = 00, 01, 10, 11), mn = 00, 01, 10, 11

15.5.3 Master transmission/reception

Master transmission/reception is an operation wherein this MCU outputs a transfer clock and transmits/receives data to/from other device.

3-Wire Serial I/O	CSI00	CSI01	CSI10	CSI11
Target channel	Channel 0 of SAU0	Channel 1 of SAU0	Channel 0 of SAU1	Channel 1 of SAU1
Pins used	$\overline{\text{SCK00}}$, SI00, SO00	$\overline{\text{SCK01}}$, SI01, SO01	$\overline{\text{SCK10}}$, SI10, SO10	$\overline{\text{SCK11}}$, SI11, SO11
Interrupt	INTCSI00	INTCSI01	INTCSI10	INTCSI11
	Transfer end interrupt (in single-transfer mode) or buffer empty interrupt (in continuous transfer mode) can be selected.			
Error detection flag	Overrun error detection flag (OVFmn) only			
Transfer data length	7 to 16 bits			
Transfer rate	Max. $f_{MCK}/4$ [Hz] Min. $f_{CLK}/(2 \times 2^{11} \times 128)$ [Hz] Note f_{CLK}: System clock frequency			
Data phase	Selectable by the DAPmn bit of the SCRmn register • DAPmn = 0: Data I/O starts at the start of the serial clock operation. • DAPmn = 1: Data I/O starts half a clock before the start of the serial clock operation.			
Clock phase	Selectable by the CKPmn bit of the SCRmn register • CKPmn = 0: Forward • CKPmn = 1: Reverse			
Data direction	MSB or LSB first			

Note Use this operation within a range that satisfies the conditions above and the AC characteristics in the electrical specifications.

Remark m: Unit number (m = 0, 1), n: Channel number (n = 0, 1), mn = 00, 01, 10, 11

(1) Register setting

Figure 15-41. Example of Contents of Registers for Master Transmission/Reception of 3-Wire Serial I/O (CSI00, CSI01, CSI10, CSI11) (1/2)

(a) Serial mode register mn (SMRmn)

	15	14	13	12	11	10	9	8	7	6	5	4	3	2	1	0
SMRmn	CKSmn 0/1	CCSmn 0	0	0	0	0	0	STSmn 0	0	SISmn0 0	1	0	0	MDmn2 0	MDmn1 0	MDmn0 0/1

Operation clock (f_{MCK}) of channel n
0: Prescaler output clock CKm0 set by the SPSm register
1: Prescaler output clock CKm1 set by the SPSm register

Interrupt source of channel n
0: Transfer end interrupt
1: Buffer empty interrupt

(b) Serial communication operation setting register mn (SCRmn)

	15	14	13	12	11	10	9	8	7	6	5	4	3	2	1	0
SCRmn	TXEmn 1	RXEmn 1	DAPmn 0/1	CKPmn 0/1	0	0	PTCmn1 0	PTCmn0 0	DIRmn 0/1	0	SLCmn1 0	SLCmn0 0	DLSmn3 0/1	DLSmn2 0/1	DLSmn1 0/1	DLSmn0 0/1

Selection of the data and clock phase (For details about the setting, see **15.3 Registers Controlling Serial Array Unit**.)

Selection of data transfer sequence
0: Inputs/outputs data with MSB first
1: Inputs/outputs data with LSB first.

Setting of data length

(c) Serial data register mn (SDRmn)

(1) When operation is stopped (SEmn = 0)

	15	14	13	12	11	10	9	8	7	6	5	4	3	2	1	0
SDRmn	Baud rate setting (division setting of operation clock (f_{MCK})							0	0	0	0	0	0	0	0	0

(2) When operation is in progress (SEmn = 1) (Lower 8 bits: SDRpL)

	15	14	13	12	11	10	9	8	7	6	5	4	3	2	1	0
SDRmn	Transmit data setting/receive data register															

SDRpL

(d) Serial output register m (SOm) … Sets only the bits of the target channel.

	15	14	13	12	11	10	9	8	7	6	5	4	3	2	1	0
SOm	0	0	0	0	0	0	CKOm1 0/1	CKOm0 0/1	0	0	0	0	0	0	SOm1 0/1	SOm0 0/1

Communication starts when these bits are 1 if the clock phase is forward (the CKPmn bit of the SCRmn = 0). If the clock phase is reversed (CKPmn = 1), communication starts when these bits are 0.

Remarks 1. m: Unit number (m = 0, 1), n: Channel number (n = 0, 1), p: CSI number (p = 00, 01, 10, 11), mn = 00, 01, 10, 11

2. ☐: Setting is fixed in the CSI master transmission/reception mode

▒: Setting disabled (set to the initial value)

0/1: Set to 0 or 1 depending on the usage of the user

Figure 15-41. Example of Contents of Registers for Master Transmission/Reception of 3-Wire Serial I/O (CSI00, CSI01, CSI10, CSI11) (2/2)

(e) Serial output enable register m (SOEm) … Sets only the bits of the target channel to 1.

	15	14	13	12	11	10	9	8	7	6	5	4	3	2	1	0
SOEm	0	0	0	0	0	0	0	0	0	0	0	0	0	0	SOEm1 0/1	SOEm0 0/1

(f) Serial channel start register m (SSm) … Sets only the bits of the target channel to 1.

	15	14	13	12	11	10	9	8	7	6	5	4	3	2	1	0
SSm	0	0	0	0	0	0	0	0	0	0	0	0	0	0	SSm1 0/1	SSm0 0/1

Remarks 1. m: Unit number (m = 0, 1), n: Channel number (n = 0, 1), p: CSI number (p = 00, 01, 10, 11), mn = 00, 01, 10, 11

2. ☐: Setting is fixed in the CSI master transmission/reception mode

▒ : Setting disabled (set to the initial value)

0/1: Set to 0 or 1 depending on the usage of the user

(2) Operation procedure

Figure 15-42. Initial Setting Procedure for Master Transmission/Reception

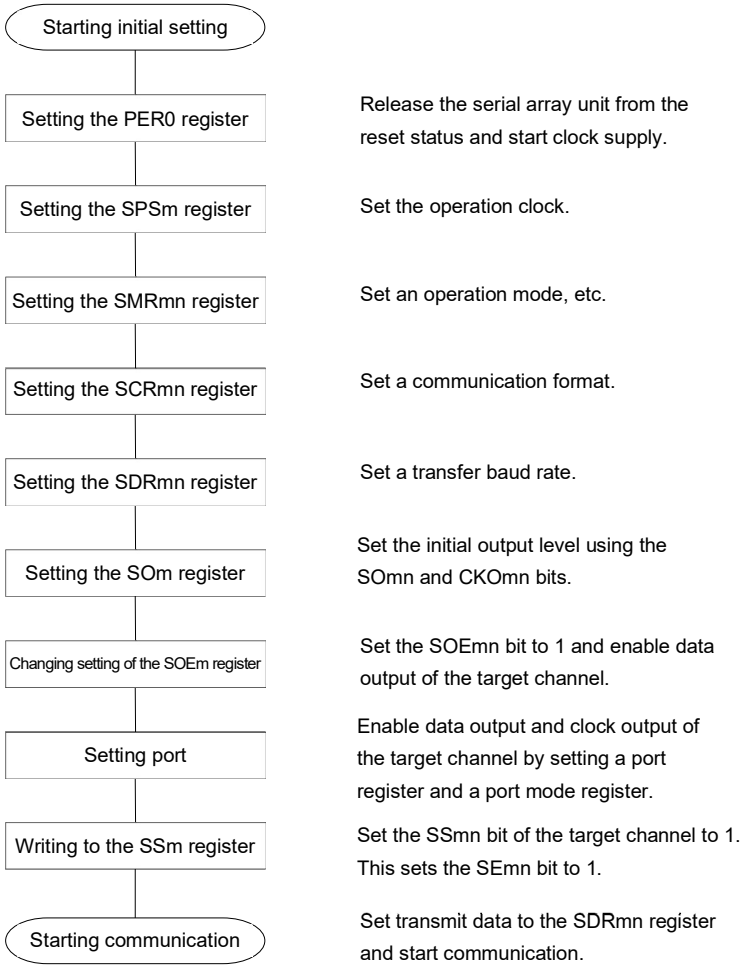

Remark m: Unit number (m = 0, 1), n: Channel number (n = 0, 1), p: CSI number (p = 00, 01, 10, 11), mn = 00, 01, 10, 11

Figure 15-43. Procedure for Stopping Master Transmission/Reception

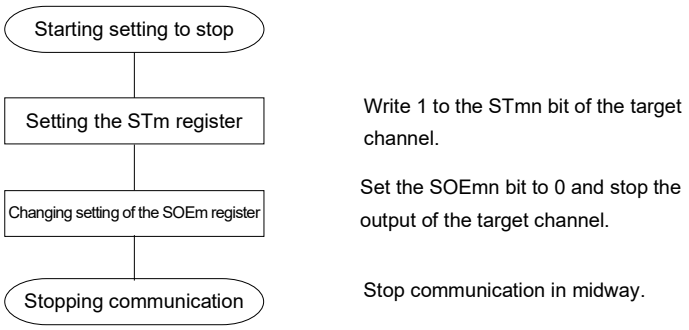

Remarks 1. Even after communication is stopped, the pin level is retained. To resume the operation, re-set serial output register m (SOm) (see **Figure 15-44 Procedure for Resuming Master Transmission/ Reception**).

2. m: Unit number (m = 0, 1), n: Channel number (n = 0, 1), p: CSI number (p = 00, 01, 10, 11), mn = 00, 01, 10, 11

Figure 15-44. Procedure for Resuming Master Transmission/Reception

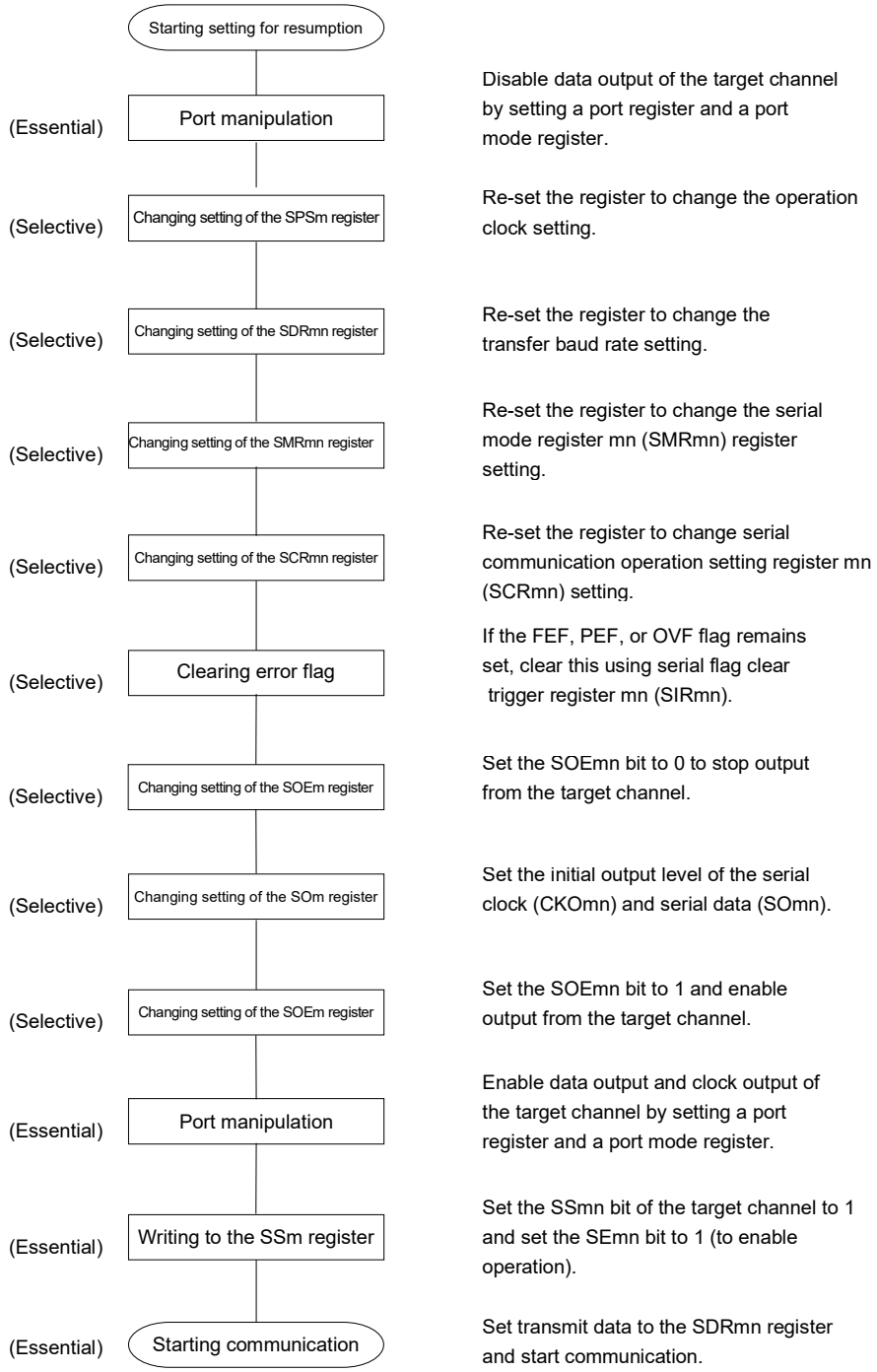

Remark m: Unit number (m = 0, 1), n: Channel number (n = 0, 1), p: CSI number (p = 00, 01, 10, 11), mn = 00, 01, 10, 11

(3) Processing flow (in single-transmission/reception mode)

Figure 15-45. Timing Chart of Master Transmission/Reception (in Single-Transmission/Reception Mode) (Type 1: DAPmn = 0, CKPmn = 0)

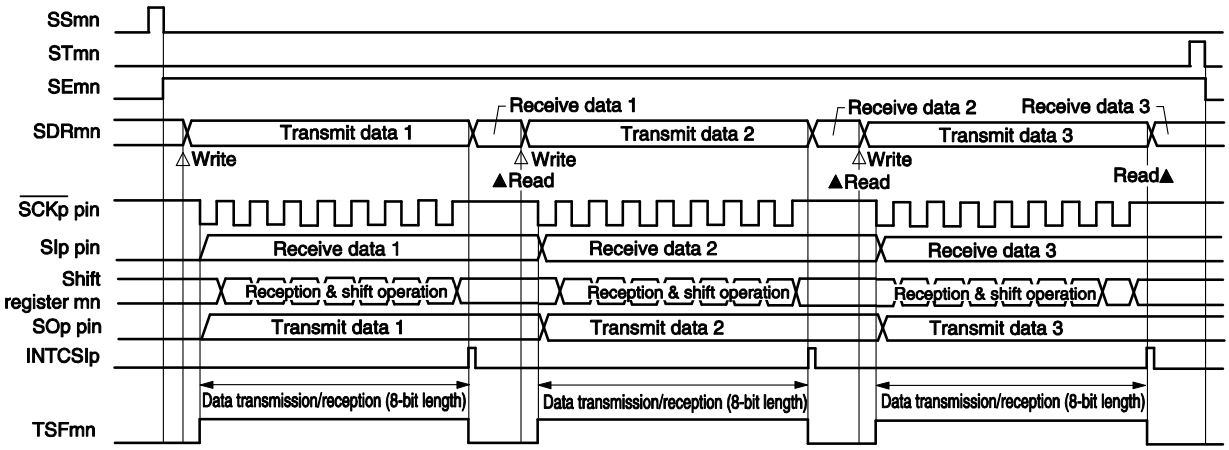

Remark m: Unit number (m = 0, 1), n: Channel number (n = 0, 1), p: CSI number (p = 00, 01, 10, 11), mn = 00, 01, 10, 11

Figure 15-46. Flowchart of Master Transmission/Reception (in Single- Transmission/Reception Mode)

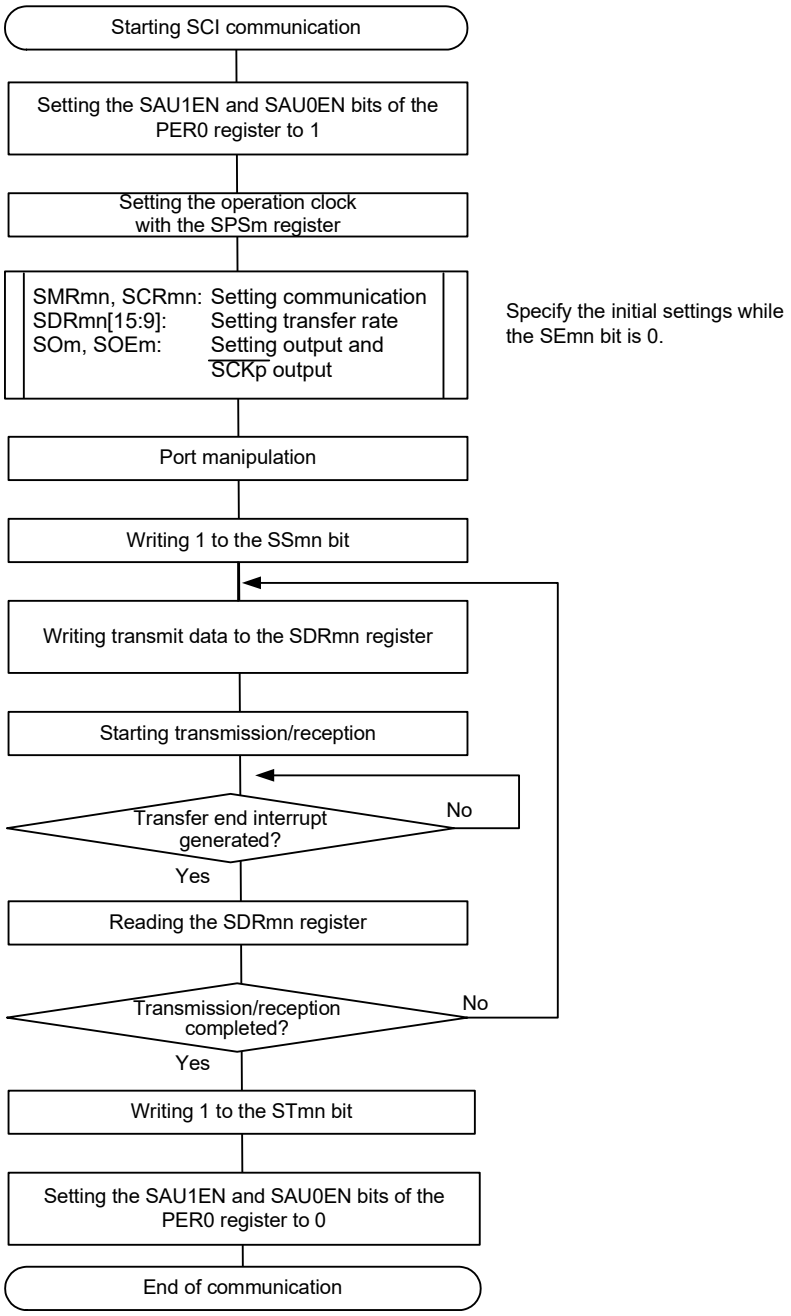

Remark m: Unit number (m = 0, 1), n: Channel number (n = 0, 1), p: CSI number (p = 00, 01, 10, 11), mn = 00, 01, 10, 11

(4) Processing flow (in continuous transmission/reception mode)

Figure 15-47. Timing Chart of Master Transmission/Reception (in Continuous Transmission/Reception Mode) (Type 1: DAPmn = 0, CKPmn = 0)

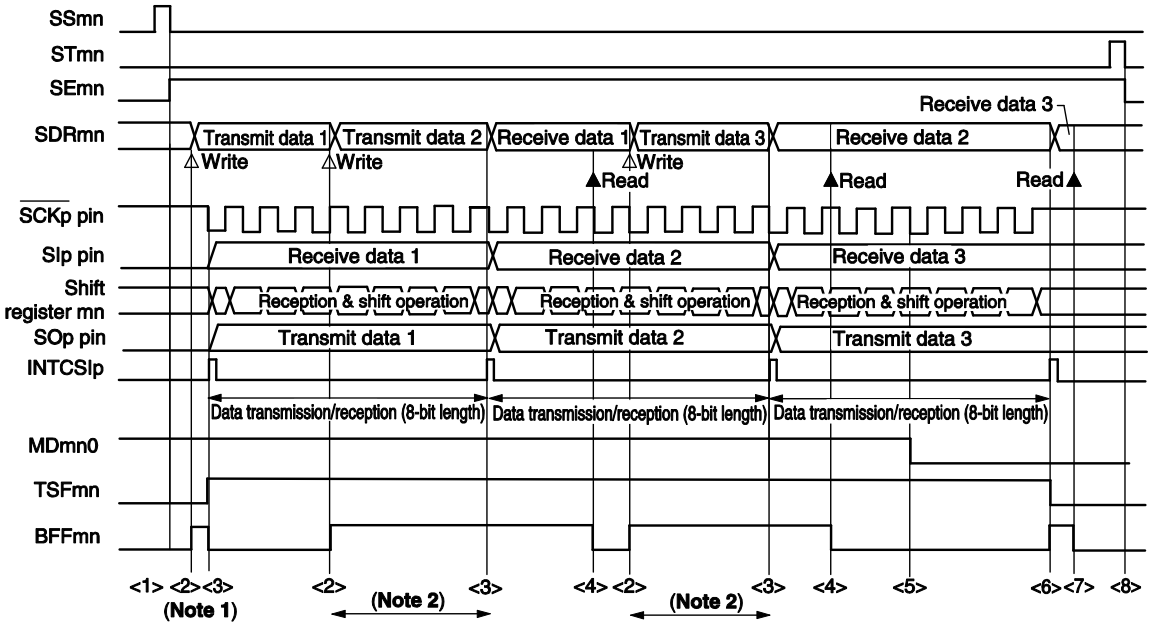

Notes 1. If transmit data is written to the SDRmn register while the BFFmn bit of serial status register mn (SSRmn) is 1 (valid data is stored in serial data register mn (SDRmn)), the transmit data is overwritten.

2. The transmit data can be read by reading the SDRmn register during this period. At this time, the transfer operation is not affected.

Caution The MDmn0 bit of serial mode register mn (SMRmn) can be rewritten even during operation. However, rewrite it before transfer of the last bit is started, so that it has been rewritten before the transfer end interrupt of the last transmit data.

Remarks 1. <1> to <8> in the figure correspond to <1> to <8> in **Figure 15-48 Flowchart of Master Transmission/Reception (in Continuous Transmission/Reception Mode)**.

2. m: Unit number (m = 0, 1), n: Channel number (n = 0, 1), p: CSI number (p = 00, 01, 10, 11), mn = 00, 01, 10, 11

Figure 15-48. Flowchart of Master Transmission/Reception (in Continuous Transmission/Reception Mode)

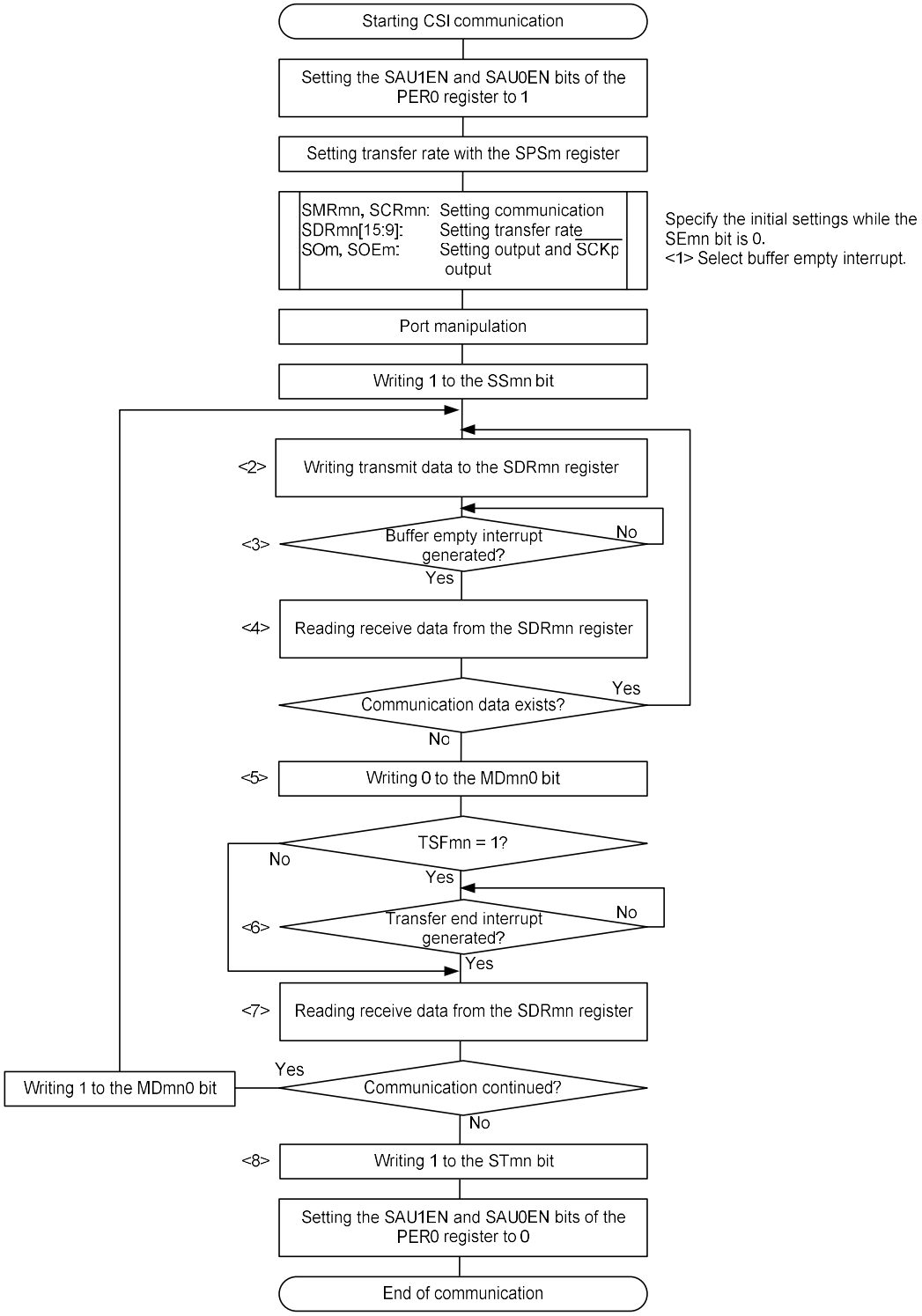

Remarks 1. <1> to <8> in the figure correspond to <1> to <8> in **Figure 15-47 Timing Chart of Master Transmission/Reception (in Continuous Transmission/Reception Mode)**.

2. m: Unit number (m = 0, 1), n: Channel number (n = 0, 1), mn = 00, 01, 10, 11

15.5.4 Slave transmission

Slave transmission is an operation wherein this MCU transmits data to another device in the state of a transfer clock being input from another device.

3-Wire Serial I/O	CSI00	CSI01	CSI10	CSI11
Target channel	Channel 0 of SAU0	Channel 1 of SAU0	Channel 0 of SAU1	Channel 1 of SAU1
Pins used	$\overline{\text{SCK00}}$, SO00	$\overline{\text{SCK01}}$, SO01	$\overline{\text{SCK10}}$, SO10	$\overline{\text{SCK11}}$, SO11
Interrupt	INTCSI00	INTCSI01	INTCSI10	INTCSI11
	Transfer end interrupt (in single-transfer mode) or buffer empty interrupt (in continuous transfer mode) can be selected.			
Error detection flag	Overrun error detection flag (OVFmn) only			
Transfer data length	7 to 16 bits			
Transfer rate	Max. f_{MCK}/6 [Hz][Notes 1, 2].			
Data phase	Selectable by the DAPmn bit of the SCRmn register • DAPmn = 0: Data output starts from the start of the serial clock operation. • DAPmn = 1: Data output starts half a clock before the start of the serial clock operation.			
Clock phase	Selectable by the CKPmn bit of the SCRmn register • CKPmn = 0: Forward • CKPmn = 1: Reverse			
Data direction	MSB or LSB first			

Notes 1. Because the external serial clock input to the $\overline{\text{SCK00}}$, $\overline{\text{SCK01}}$, $\overline{\text{SCK10}}$, and $\overline{\text{SCK11}}$ pins is sampled internally and used, the fastest transfer rate is f_{MCK}/6 [Hz].

2. Use this operation within a range that satisfies the conditions above and the AC characteristics in the electrical specifications.

Remarks 1. f_{MCK}: Operation clock frequency of target channel

2. m: Unit number (m = 0, 1), n: Channel number (n = 0, 1), mn = 00, 01, 10, 11

(1) Register setting

Figure 15-49. Example of Contents of Registers for Slave Transmission of 3-Wire Serial I/O (CSI00, CSI01, CSI10, CSI11) (1/2)

(a) Serial mode register mn (SMRmn)

	15	14	13	12	11	10	9	8	7	6	5	4	3	2	1	0
SMRmn	CKSmn 0/1	CCSmn 1	0	0	0	0	0	STSmn 0	0	SISmn0 0	1	0	0	MDmn2 0	MDmn1 0	MDmn0 0/1

Operation clock (f_{MCK}) of channel n
0: Prescaler output clock CKm0 set by the SPSm register
1: Prescaler output clock CKm1 set by the SPSm register

Interrupt source of channel n
0: Transfer end interrupt
1: Buffer empty interrupt

(b) Serial communication operation setting register mn (SCRmn)

	15	14	13	12	11	10	9	8	7	6	5	4	3	2	1	0
SCRmn	TXEmn 1	RXEmn 0	DAPmn 0/1	CKPmn 0/1	0	0	PTCmn1 0	PTCmn0 0	DIRmn 0/1	0	SLCmn1 0	SLCmn0 0	DLSmn3 0/1	DLSmn2 0/1	DLSmn1 0/1	DLSmn0 0/1

Selection of the data and clock phase (For details about the setting, see **15.3 Registers Controlling Serial Array Unit**.)

Selection of data transfer sequence
0: Inputs/outputs data with MSB first
1: Inputs/outputs data with LSB first.

Setting of data length

(c) Serial data register mn (SDRmn)

(1) When operation is stopped (SEmn = 0)

	15	14	13	12	11	10	9	8	7	6	5	4	3	2	1	0
SDRmn	Baud rate setting							0	0	0	0	0	0	0	0	0

(2) When operation is in progress (SEmn = 1) (Lower 8 bits: SDRpL)

	15	14	13	12	11	10	9	8	7	6	5	4	3	2	1	0
SDRmn	Transmit data setting															

SDRpL

(d) Serial output register m (SOm) … Sets only the bits of the target channel.

	15	14	13	12	11	10	9	8	7	6	5	4	3	2	1	0
SOm	0	0	0	0	0	0	CKOm1 ×	CKOm0 ×	0	0	0	0	0	0	SOm1 0/1	SOm0 0/1

Remarks 1. m: Unit number (m = 0, 1), n: Channel number (n = 0, 1), p: CSI number (p = 00, 01, 10, 11), mn = 00, 01, 10, 11

2. ☐ : Setting is fixed in the CSI slave transmission mode
▒ : Setting disabled (set to the initial value)
× : Bit that cannot be used in this mode (set to the initial value when not used in any mode)
0/1 : Set to 0 or 1 depending on the usage of the user

Figure 15-49. Example of Contents of Registers for Slave Transmission of 3-Wire Serial I/O (CSI00, CSI01, CSI10, CSI11) (2/2)

(e) Serial output enable register m (SOEm) … Sets only the bits of the target channel to 1.

	15	14	13	12	11	10	9	8	7	6	5	4	3	2	1	0
SOEm	0	0	0	0	0	0	0	0	0	0	0	0	0	0	SOEm1 0/1	SOEm0 0/1

(f) Serial channel start register m (SSm) … Sets only the bits of the target channel to 1.

	15	14	13	12	11	10	9	8	7	6	5	4	3	2	1	0
SSm	0	0	0	0	0	0	0	0	0	0	0	0	0	0	SSm1 0/1	SSm0 0/1

Remarks 1. m: Unit number (m = 0, 1), n: Channel number (n = 0, 1), p: CSI number (p = 00, 01, 10, 11), mn = 00, 01, 10, 11

2. ☐ : Setting is fixed in the CSI slave transmission mode

▒ : Setting disabled (set to the initial value)

× : Bit that cannot be used in this mode (set to the initial value when not used in any mode)

0/1 : Set to 0 or 1 depending on the usage of the user

(2) Operation procedure

Figure 15-50. Initial Setting Procedure for Slave Transmission

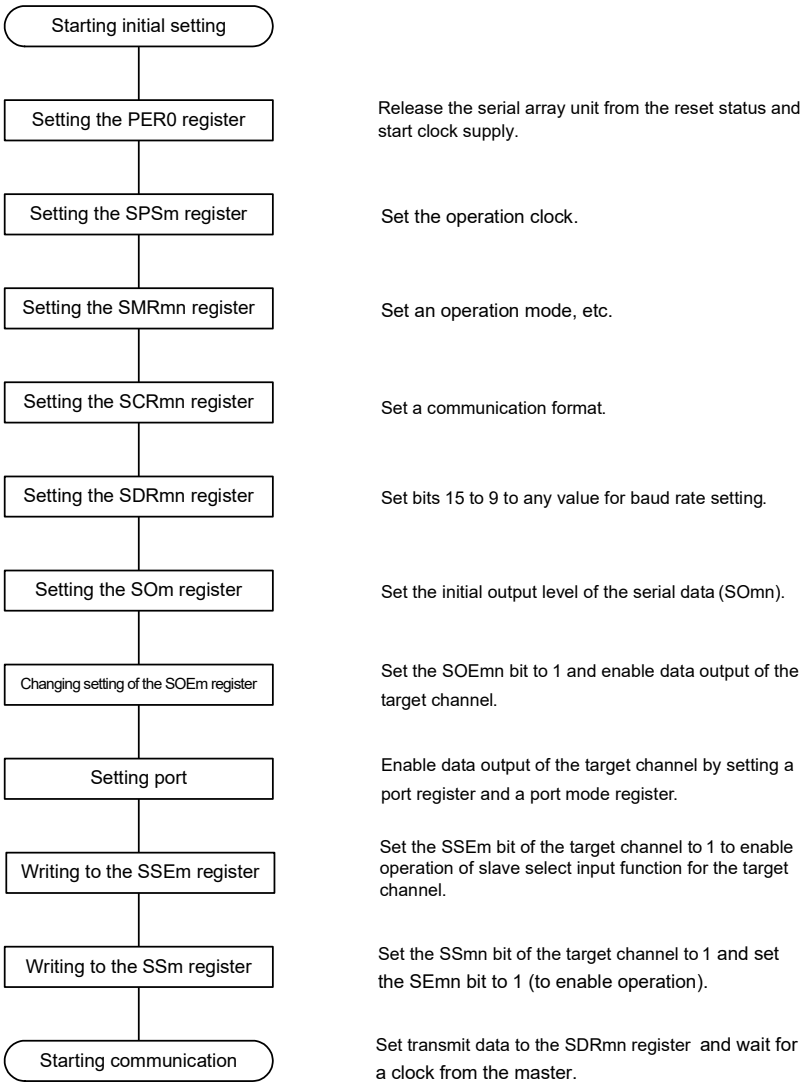

Remark m: Unit number (m = 0, 1), n: Channel number (n = 0, 1), mn = 00, 01, 10, 11

Figure 15-51. Procedure for Stopping Slave Transmission

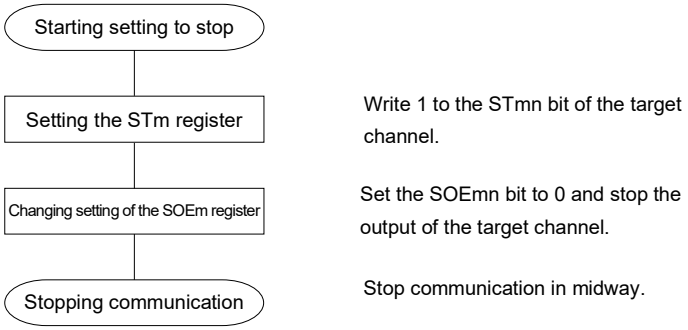

Remarks 1. Even after communication is stopped, the pin level is retained. To resume the operation, re-set serial output register m (SOm) (see **Figure 15-52 Procedure for Resuming Slave Transmission**).

2. m: Unit number (m = 0, 1), n: Channel number (n = 0, 1), mn = 00, 01, 10, 11

Figure 15-52. Procedure for Resuming Slave Transmission

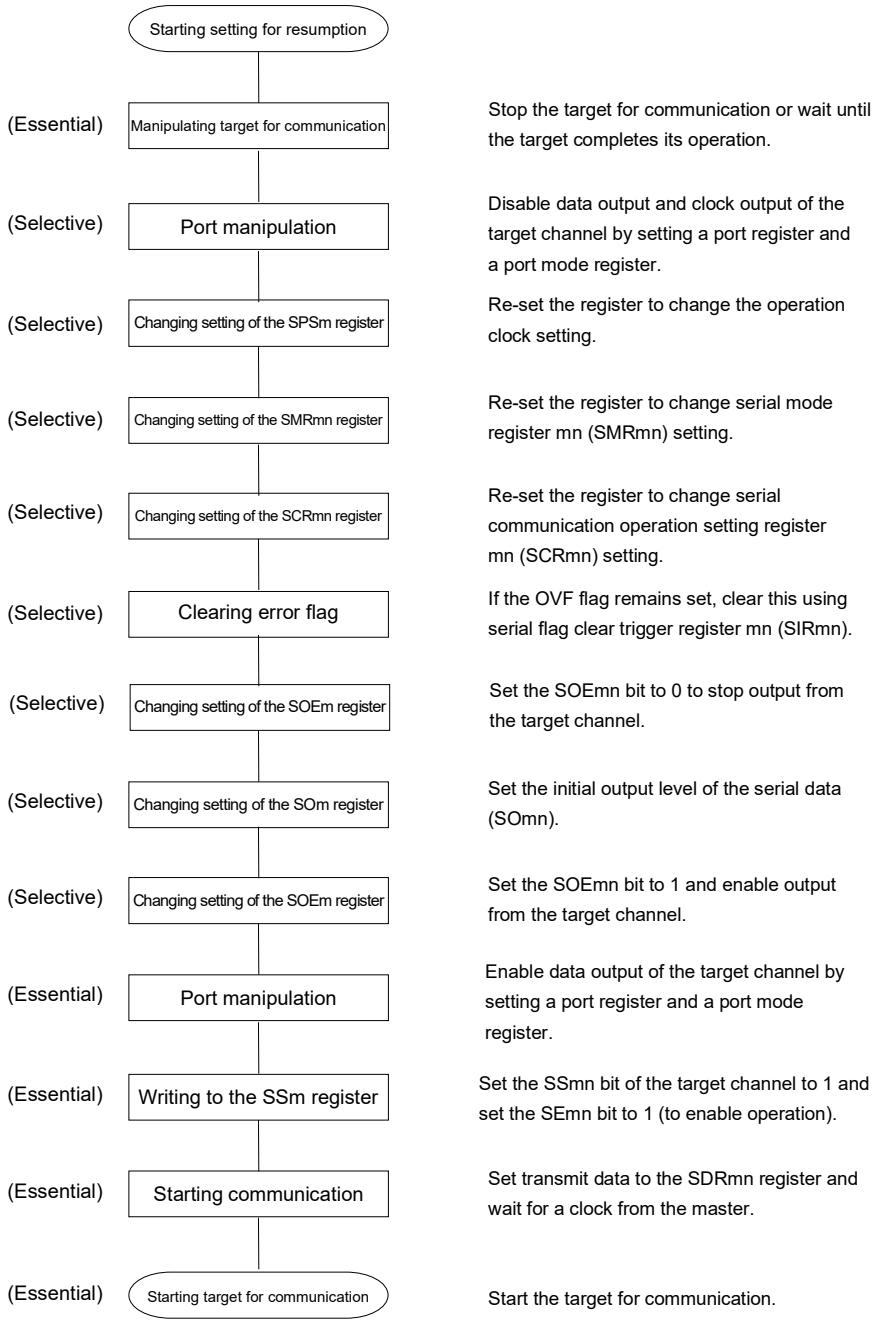

Remark m: Unit number (m = 0, 1), n: Channel number (n = 0, 1), mn = 00, 01, 10, 11

(3) Processing flow (in single-transmission mode)

Figure 15-53. Timing Chart of Slave Transmission (in Single-Transmission Mode)
(Type 1: DAPmn = 0, CKPmn = 0)

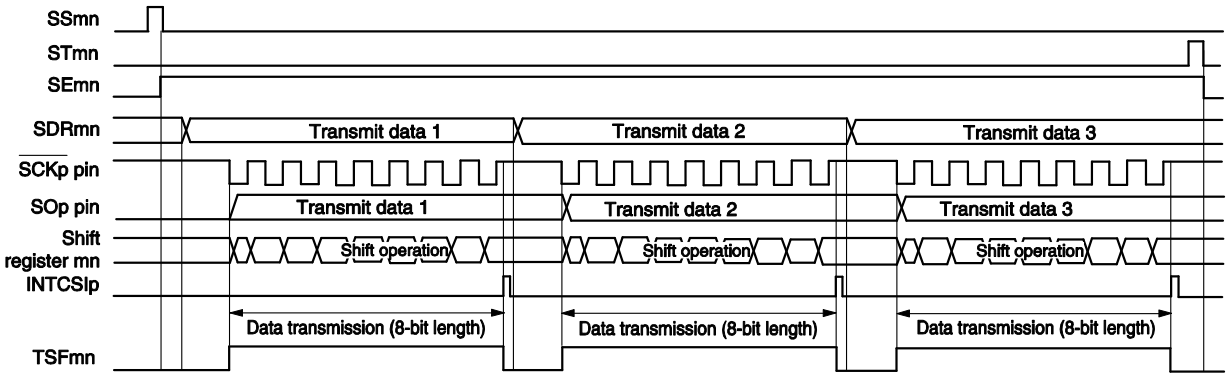

Remark m: Unit number (m = 0, 1), n: Channel number (n = 0, 1), p: CSI number (p = 00, 01, 10, 11), mn = 00, 01, 10, 11

Figure 15-54. Flowchart of Slave Transmission (in Single-Transmission Mode)

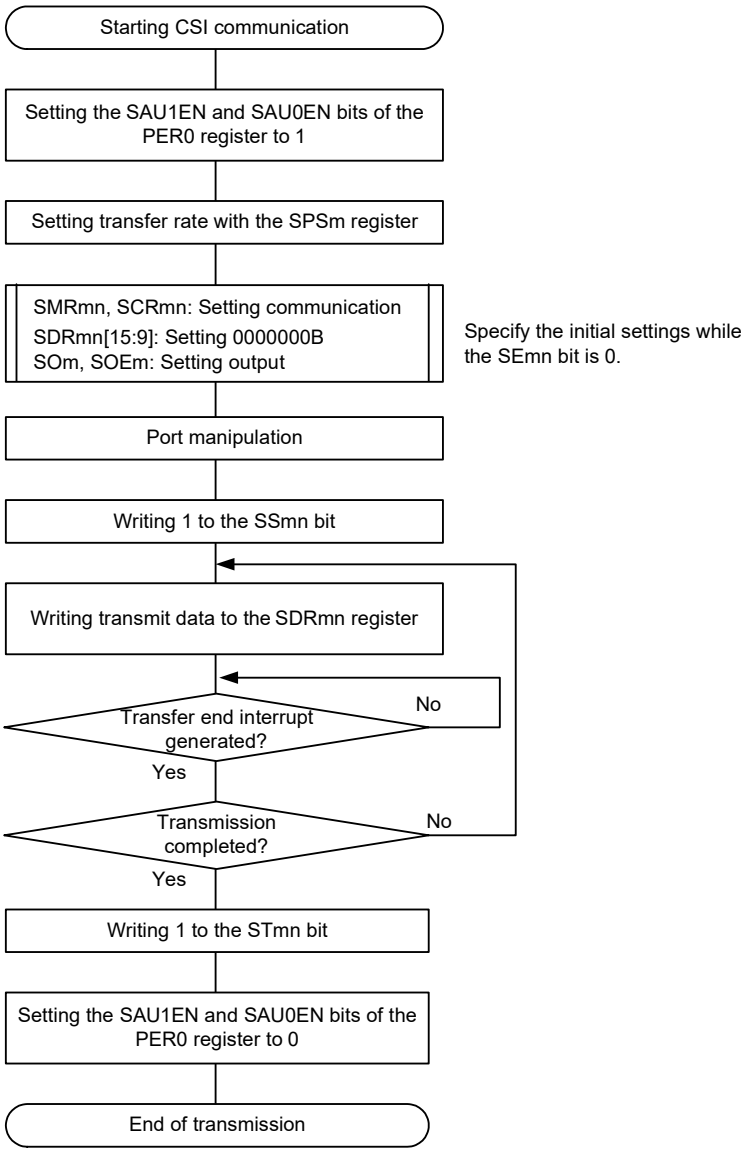

Remark m: Unit number (m = 0, 1), n: Channel number (n = 0, 1), p: CSI number (p = 00, 01, 10, 11), mn = 00, 01, 10, 11

(4) Processing flow (in continuous transmission mode)

Figure 15-55. Timing Chart of Slave Transmission (in Continuous Transmission Mode)
(Type 1: DAPmn = 0, CKPmn = 0)

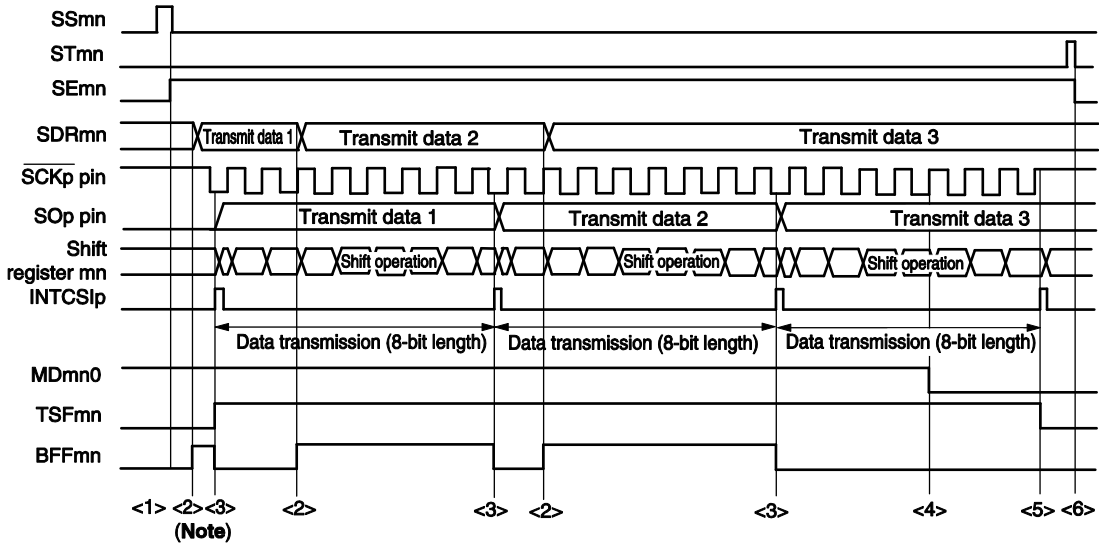

Note If transmit data is written to the SDRmn register while the BFFmn bit of serial status register mn (SSRmn) is 1 (valid data is stored in serial data register mn (SDRmn)), the transmit data is overwritten.

Caution **The MDmn0 bit of serial mode register mn (SMRmn) can be rewritten even during operation. However, rewrite it before transfer of the last bit is started.**

Remark m: Unit number (m = 0, 1), n: Channel number (n = 0, 1), p: CSI number (p = 00, 01, 10, 11), mn = 00, 01, 10, 11

Figure 15-56. Flowchart of Slave Transmission (in Continuous Transmission Mode)

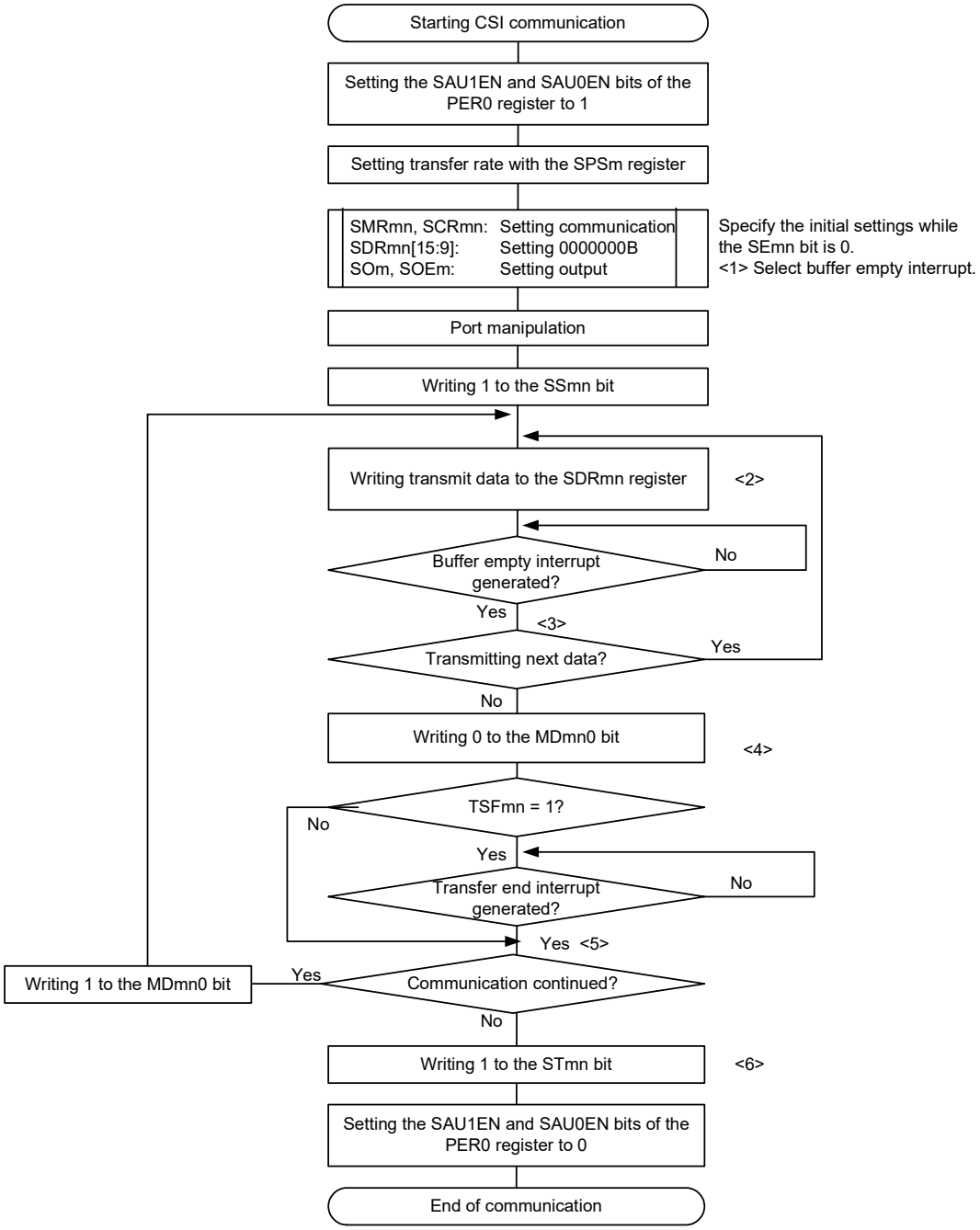

Remarks 1. <1> to <6> in the figure correspond to <1> to <6> in **Figure 15-55 Timing Chart of Slave Transmission (in Continuous Transmission Mode)**.

2. m: Unit number (m = 0, 1), n: Channel number (n = 0, 1), p: CSI number (p = 00, 01, 10, 11), mn = 00, 01, 10, 11

15.5.5 Slave reception

Slave reception is an operation wherein this MCU receives data from another device in the state of a transfer clock being input from another device.

3-Wire Serial I/O	CSI00	CSI01	CSI10	CSI11
Target channel	Channel 0 of SAU0	Channel 1 of SAU0	Channel 0 of SAU1	Channel 1 of SAU1
Pins used	$\overline{\text{SCK00}}$, SI00	$\overline{\text{SCK01}}$, SI01	$\overline{\text{SCK10}}$, SI10	$\overline{\text{SCK11}}$, SI11
Interrupt	INTCSI00	INTCSI01	INTCSI10	INTCSI11
	Transfer end interrupt only (Setting the buffer empty interrupt is prohibited.)			
Error detection flag	Overrun error detection flag (OVFmn) only			
Transfer data length	7 to 16 bits			
Transfer rate	Max. f_{MCK}/6 [Hz] Notes 1, 2			
Data phase	Selectable by the DAPmn bit of the SCRmn register • DAPmn = 0: Data input starts from the start of the serial clock operation. • DAPmn = 1: Data input starts half a clock before the start of the serial clock operation.			
Clock phase	Selectable by the CKPmn bit of the SCRmn register • CKPmn = 0: Forward • CKPmn = 1: Reverse			
Data direction	MSB or LSB first			

Notes 1. Because the external serial clock input to the $\overline{\text{SCK00}}$, $\overline{\text{SCK01}}$, $\overline{\text{SCK10}}$, and $\overline{\text{SCK11}}$ pins is sampled internally and used, the fastest transfer rate is f_{MCK}/6 [Hz].

2. Use this operation within a range that satisfies the conditions above and the AC characteristics in the electrical specifications.

Remarks 1. f_{MCK}: Operation clock frequency of target channel

2. m: Unit number (m = 0, 1), n: Channel number (n = 0, 1), mn = 00, 01, 10, 11

(1) Register setting

Figure 15-57. Example of Contents of Registers for Slave Reception of 3-Wire Serial I/O (CSI00, CSI01, CSI10, CSI11) (1/2)

(a) Serial mode register mn (SMRmn)

	15	14	13	12	11	10	9	8	7	6	5	4	3	2	1	0
SMRmn	CKSmn	CCSmn						STSmn		SISmn0				MDmn2	MDmn1	MDmn0
	0/1	1	0	0	0	0	0	0	0	0	1	0	0	0	0	0

Operation clock (f_{MCK}) of channel n
0: Prescaler output clock CKm0 set by the SPSm register
1: Prescaler output clock CKm1 set by the SPSm register

Interrupt source of channel n
0: Transfer end interrupt

(b) Serial communication operation setting register mn (SCRmn)

	15	14	13	12	11	10	9	8	7	6	5	4	3	2	1	0
SCRmn	TXEmn	RXEmn	DAPmn	CKPmn			PTCmn1	PTCmn0	DIRmn		SLCmn1	SLCmn0	DLSmn3	DLSmn2	DLSmn1	DLSmn0
	0	1	0/1	0/1	0	0	0	0	0/1	0	0	0	0/1	0/1	0/1	0/1

Selection of the data and clock phase (For details about the setting, see **15.3 Registers Controlling Serial Array Unit**.)

Selection of data transfer sequence
0: Inputs/outputs data with MSB first
1: Inputs/outputs data with LSB first.

Setting of data length

(c) Serial data register mn (SDRmn)

(1) When operation is stopped (SEmn = 0)

	15	14	13	12	11	10	9	8	7	6	5	4	3	2	1	0
SDRmn	0000000 (baud rate setting)							0	0	0	0	0	0	0	0	0

(2) When operation is in progress (SEmn = 1) (Lower 8 bits: SDRpL)

	15	14	13	12	11	10	9	8	7	6	5	4	3	2	1	0
SDRmn	Transmit data setting/receive data register															

SDRpL

Remarks 1. m: Unit number (m = 0, 1), n: Channel number (n = 0, 1), p: CSI number (p = 00, 01, 10, 11), mn = 00, 01, 10, 11

2. □ : Setting is fixed in the CSI slave reception mode, ▒ : Setting disabled (set to the initial value)
×: Bit that cannot be used in this mode (set to the initial value when not used in any mode)
0/1: Set to 0 or 1 depending on the usage of the user

Figure 15-57. Example of Contents of Registers for Slave Reception of 3-Wire Serial I/O (CSI00, CSI01, CSI10, CSI11) (2/2)

(d) Serial output register m (SOm) …The register that not used in this mode.

	15	14	13	12	11	10	9	8	7	6	5	4	3	2	1	0
SOm	0	0	0	0	0	0	CKOm1 ×	CKOm0 ×	0	0	0	0	0	0	SOm1 ×	SOm0 ×

(e) Serial output enable register m (SOEm) …The register that not used in this mode.

	15	14	13	12	11	10	9	8	7	6	5	4	3	2	1	0
SOEm	0	0	0	0	0	0	0	0	0	0	0	0	0	0	SOEm1 ×	SOEm0 ×

(f) Serial channel start register m (SSm) … Sets only the bits of the target channel to 1.

	15	14	13	12	11	10	9	8	7	6	5	4	3	2	1	0
SSm	0	0	0	0	0	0	0	0	0	0	0	0	0	0	SSm1 0/1	SSm0 0/1

Remarks 1. m: Unit number (m = 0, 1), n: Channel number (n = 0, 1), p: CSI number (p = 00, 01, 10, 11), mn = 00, 01, 10, 11

2. ☐ : Setting is fixed in the CSI slave reception mode, ▒ : Setting disabled (set to the initial value)
×: Bit that cannot be used in this mode (set to the initial value when not used in any mode)
0/1: Set to 0 or 1 depending on the usage of the user

(2) Operation procedure

Figure 15-58. Initial Setting Procedure for Slave Reception

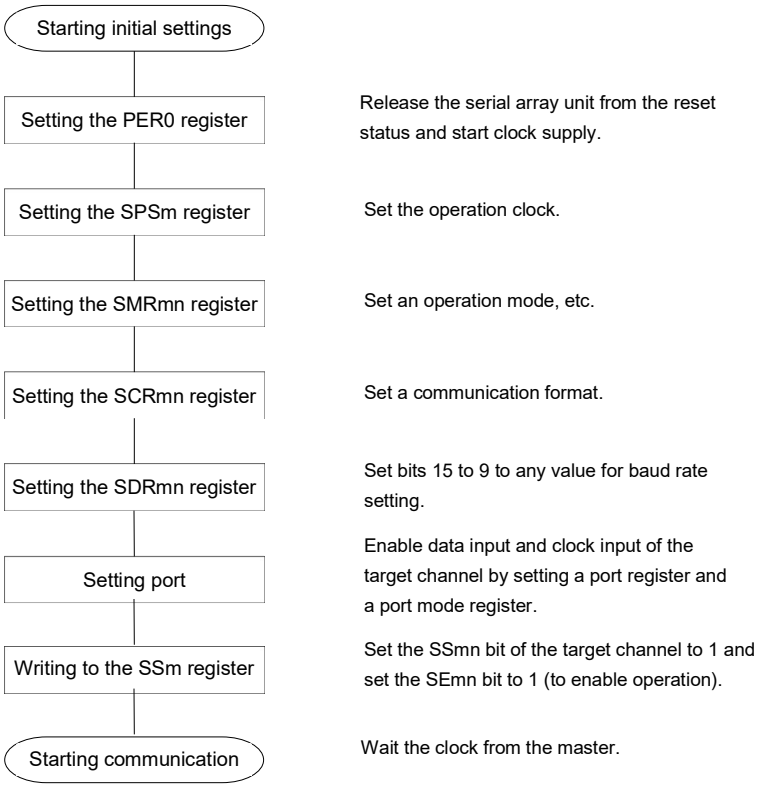

Figure 15-59. Procedure for Stopping Slave Reception

Remark m: Unit number (m = 0, 1), n: Channel number (n = 0, 1), p: CSI number (p = 00, 01, 10, 11), mn = 00, 01, 10, 11

Figure 15-60. Procedure for Resuming Slave Reception

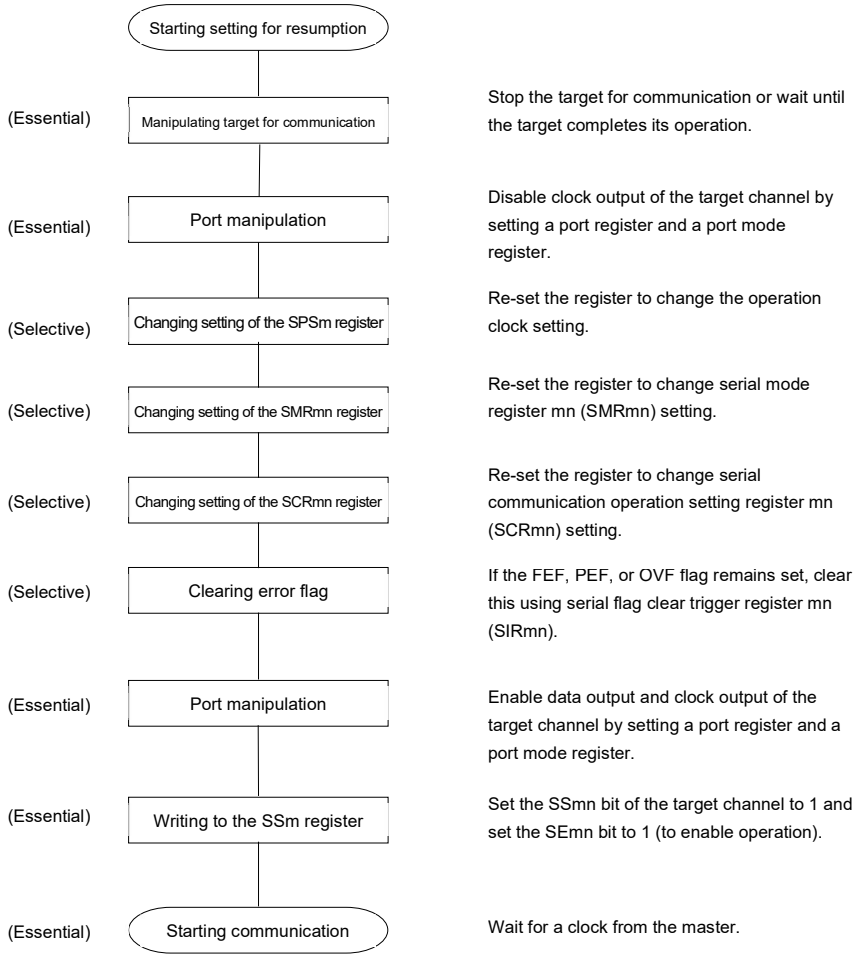

Remark m: Unit number (m = 0, 1), n: Channel number (n = 0, 1), p: CSI number (p = 00, 01, 10, 11), mn = 00, 01, 10, 11

(3) Processing flow (in single-reception mode)

Figure 15-61. Timing Chart of Slave Reception (in Single-Reception Mode)
(Type 1: DAPmn = 0, CKPmn = 0)

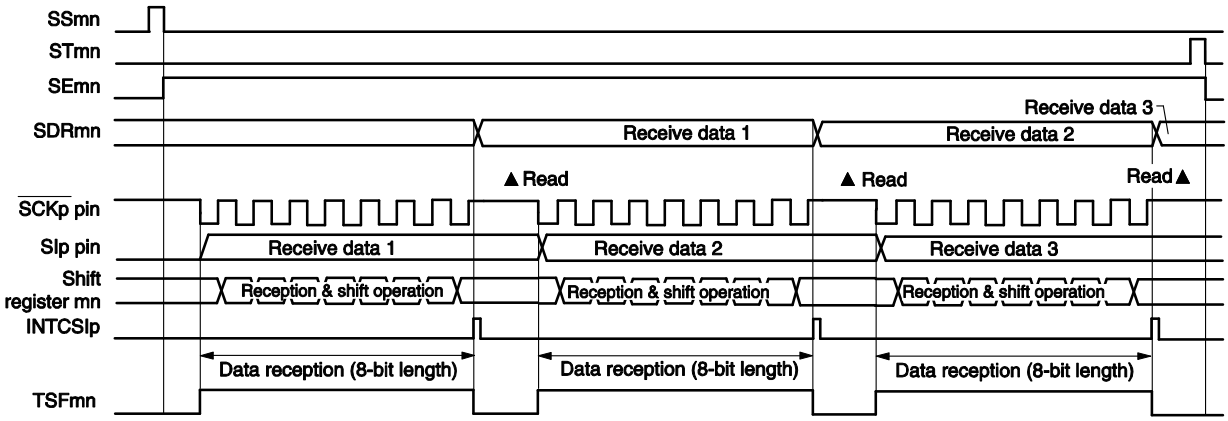

Remark m: Unit number (m = 0, 1), n: Channel number (n = 0, 1), p: CSI number (p = 00, 01, 10, 11), mn = 00, 01, 10, 11

Figure 15-62. Flowchart of Slave Reception (in Single-Reception Mode)

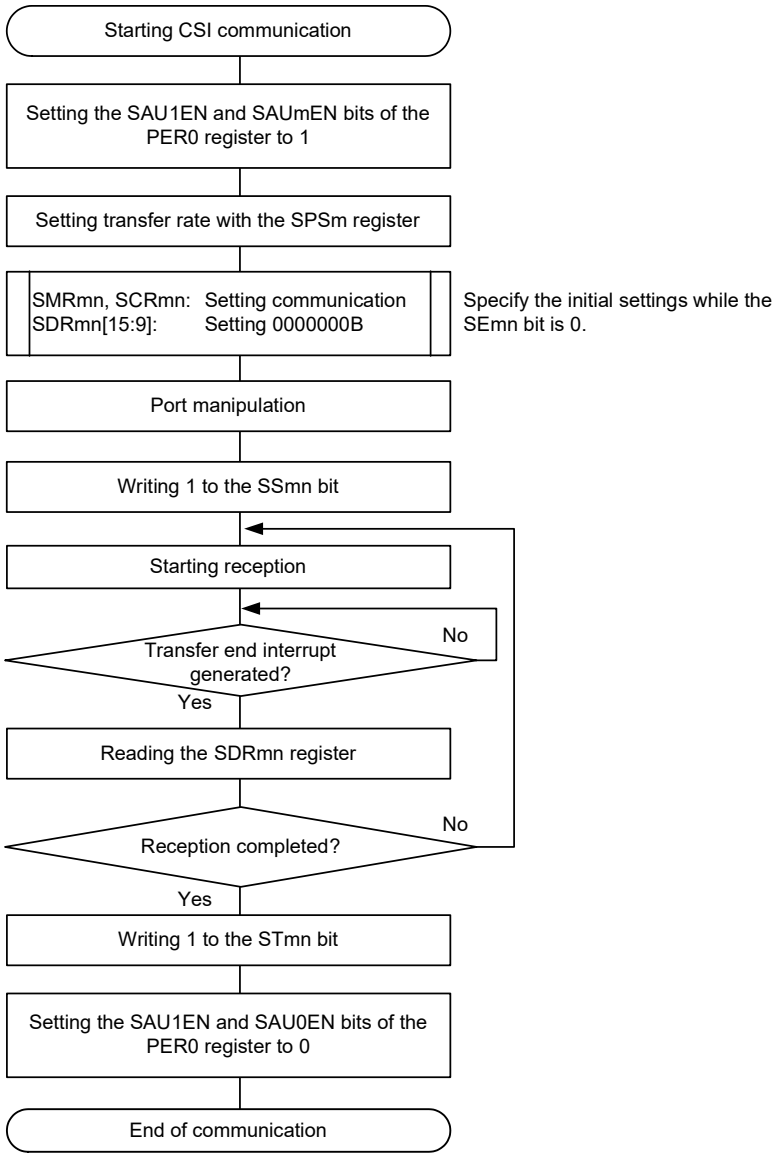

Remark m: Unit number (m = 0, 1), n: Channel number (n = 0, 1), mn = 00, 01, 10, 11

15.5.6 Slave transmission/reception

Slave transmission/reception is an operation wherein this MCU transmits/receives data to/from another device in the state of a transfer clock being input from another device.

3-Wire Serial I/O	CSI00	CSI01	CSI10	CSI11
Target channel	Channel 0 of SAU0	Channel 1 of SAU0	Channel 0 of SAU1	Channel 1 of SAU1
Pins used	$\overline{\text{SCK00}}$, SI00, SO00	$\overline{\text{SCK01}}$, SI01, SO01	$\overline{\text{SCK10}}$, SI10, SO10	$\overline{\text{SCK11}}$, SI11, SO11
Interrupt	INTCSI00	INTCSI01	INTCSI10	INTCSI11
	Transfer end interrupt (in single-transfer mode) or buffer empty interrupt (in continuous transfer mode) can be selected.			
Error detection flag	Overrun error detection flag (OVFmn) only			
Transfer data length	7 to 16 bits			
Transfer rate	Max. f_{MCK}/6 [Hz][Notes 1, 2].			
Data phase	Selectable by the DAPmn bit of the SCRmn register • DAPmn = 0: Data I/O starts from the start of the serial clock operation. • DAPmn = 1: Data I/O starts half a clock before the start of the serial clock operation.			
Clock phase	Selectable by the CKPmn bit of the SCRmn register • CKPmn = 0: Forward • CKPmn = 1: Reverse			
Data direction	MSB or LSB first			

Notes 1. Because the external serial clock input to the $\overline{\text{SCK00}}$, $\overline{\text{SCK01}}$, $\overline{\text{SCK10}}$, and $\overline{\text{SCK11}}$ pins is sampled internally and used, the fastest transfer rate is f_{MCK}/6 [Hz].

2. Use this operation within a range that satisfies the conditions above and the AC characteristics in the electrical specifications.

Remarks 1. f_{MCK}: Operation clock frequency of target channel

2. m: Unit number (m = 0, 1), n: Channel number (n = 0, 1), mn = 00, 01, 10, 11

(1) Register setting

Figure 15-63. Example of Contents of Registers for Slave Transmission/Reception of 3-Wire Serial I/O (CSI00, CSI01, CSI10, CSI11) (1/2)

(a) Serial mode register mn (SMRmn)

	15	14	13	12	11	10	9	8	7	6	5	4	3	2	1	0
SMRmn	CKSmn 0/1	CCSmn 1	0	0	0	0	0	STSmn 0	0	SISmn0 0	1	0	0	MDmn2 0	MDmn1 0	MDmn0 0/1

Operation clock (f_{MCK}) of channel n
0: Prescaler output clock CKm0 set by the SPSm register
1: Prescaler output clock CKm1 set by the SPSm register

Interrupt source of channel n
0: Transfer end interrupt
1: Buffer empty interrupt

(b) Serial communication operation setting register mn (SCRmn)

	15	14	13	12	11	10	9	8	7	6	5	4	3	2	1	0
SCRmn	TXEmn 1	RXEmn 1	DAPmn 0/1	CKPmn 0/1	0	0	PTCmn1 0	PTCmn0 0	DIRmn 0/1	0	SLCmn1 0	SLCmn0 0	DLSmn3 0/1	DLSmn2 0/1	DLSmn1 0/1	DLSmn0 0/1

Selection of the data and clock phase (For details about the setting, see **15.3 Registers Controlling Serial Array Unit**.)

Selection of data transfer sequence
0: Inputs/outputs data with MSB first
1: Inputs/outputs data with LSB first.

Setting of data length

(c) Serial data register mn (SDRmn)

(1) When operation is stopped (SEmn = 0)

	15	14	13	12	11	10	9	8	7	6	5	4	3	2	1	0
SDRmn	0000000 (baud rate setting)							0	0	0	0	0	0	0	0	0

(2) When operation is in progress (SEmn = 1) (Lower 8 bits: SDRpL)

	15	14	13	12	11	10	9	8	7	6	5	4	3	2	1	0
SDRmn	Transmit data setting/receive data register															

SDRpL

(d) Serial output register m (SOm) … Sets only the bits of the target channel.

	15	14	13	12	11	10	9	8	7	6	5	4	3	2	1	0
SOm	0	0	0	0	0	0	CKOm1 ×	CKOm0 ×	0	0	0	0	0	0	SOm1 0/1	SOm0 0/1

Caution Be sure to set transmit data to the SDRpL register before the clock from the master is started.

Remarks 1. m: Unit number (m = 0, 1), n: Channel number (n = 0, 1), p: CSI number (p = 00, 01, 10, 11), mn = 00, 01, 10, 11

2. ☐: Setting is fixed in the CSI slave transmission/reception mode
▒: Setting disabled (set to the initial value)
×: Bit that cannot be used in this mode (set to the initial value when not used in any mode)
0/1: Set to 0 or 1 depending on the usage of the user

<R>

Figure 15-63. Example of Contents of Registers for Slave Transmission/Reception of 3-Wire Serial I/O (CSI00, CSI01, CSI10, CSI11) (2/2)

(e) Serial output enable register m (SOEm) … Sets only the bits of the target channel to 1.

	15	14	13	12	11	10	9	8	7	6	5	4	3	2	1	0
SOEm	0	0	0	0	0	0	0	0	0	0	0	0	0	0	SOEm1 0/1	SOEm0 0/1

(f) Serial channel start register m (SSm) … Sets only the bits of the target channel to 1.

	15	14	13	12	11	10	9	8	7	6	5	4	3	2	1	0
SSm	0	0	0	0	0	0	0	0	0	0	0	0	0	0	SSm1 0/1	SSm0 0/1

Remarks 1. m: Unit number (m = 0, 1), n: Channel number (n = 0, 1), p: CSI number (p = 00, 01, 10, 11), mn = 00, 01, 10, 11

2. ☐: Setting is fixed in the CSI slave transmission/reception mode

▒: Setting disabled (set to the initial value)

×: Bit that cannot be used in this mode (set to the initial value when not used in any mode)

0/1: Set to 0 or 1 depending on the usage of the user

(2) Operation procedure

Figure 15-64. Initial Setting Procedure for Slave Transmission/Reception

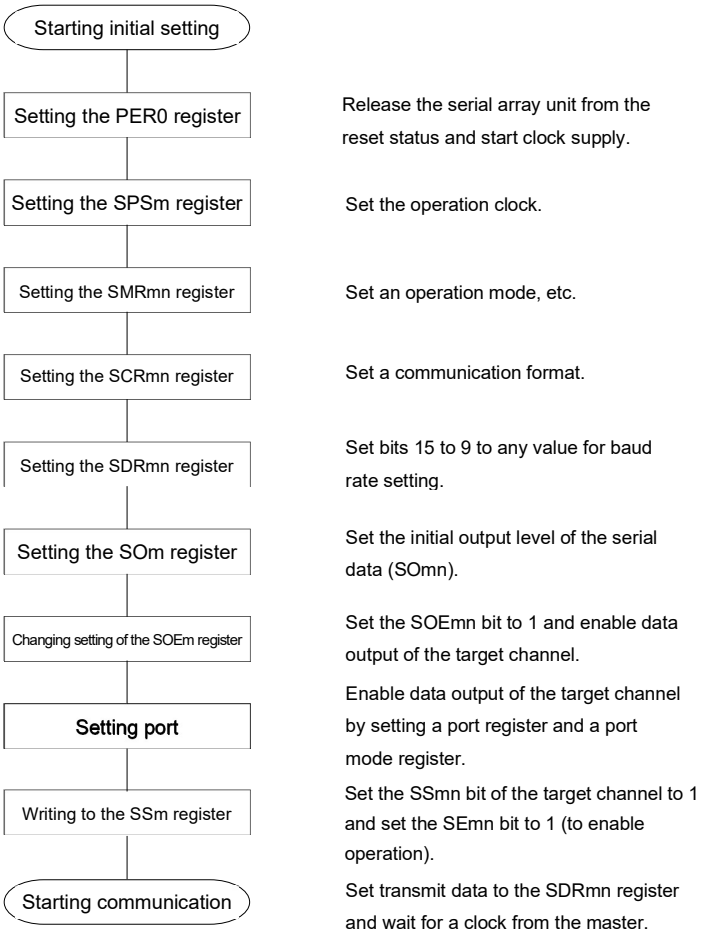

Caution Be sure to set transmit data to the SDRpL register before the clock from the master is started.

Remark m: Unit number (m = 0, 1), n: Channel number (n = 0, 1), p: CSI number (p = 00, 01, 10, 11), mn = 00, 01, 10, 11

Figure 15-65. Procedure for Stopping Slave Transmission/Reception

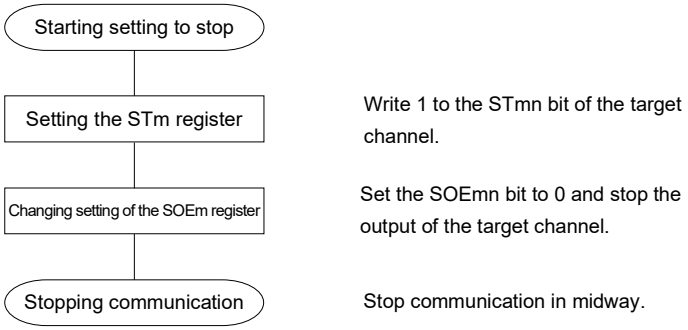

Remarks 1. Even after communication is stopped, the pin level is retained. To resume the operation, re-set serial output register m (SOm) (see **Figure 15-66 Procedure for Resuming Slave Transmission/Reception**).

2. m: Unit number (m = 0, 1), n: Channel number (n = 0, 1), p: CSI number (p = 00, 01, 10, 11), mn = 00, 01, 10, 11

Figure 15-66. Procedure for Resuming Slave Transmission/Reception

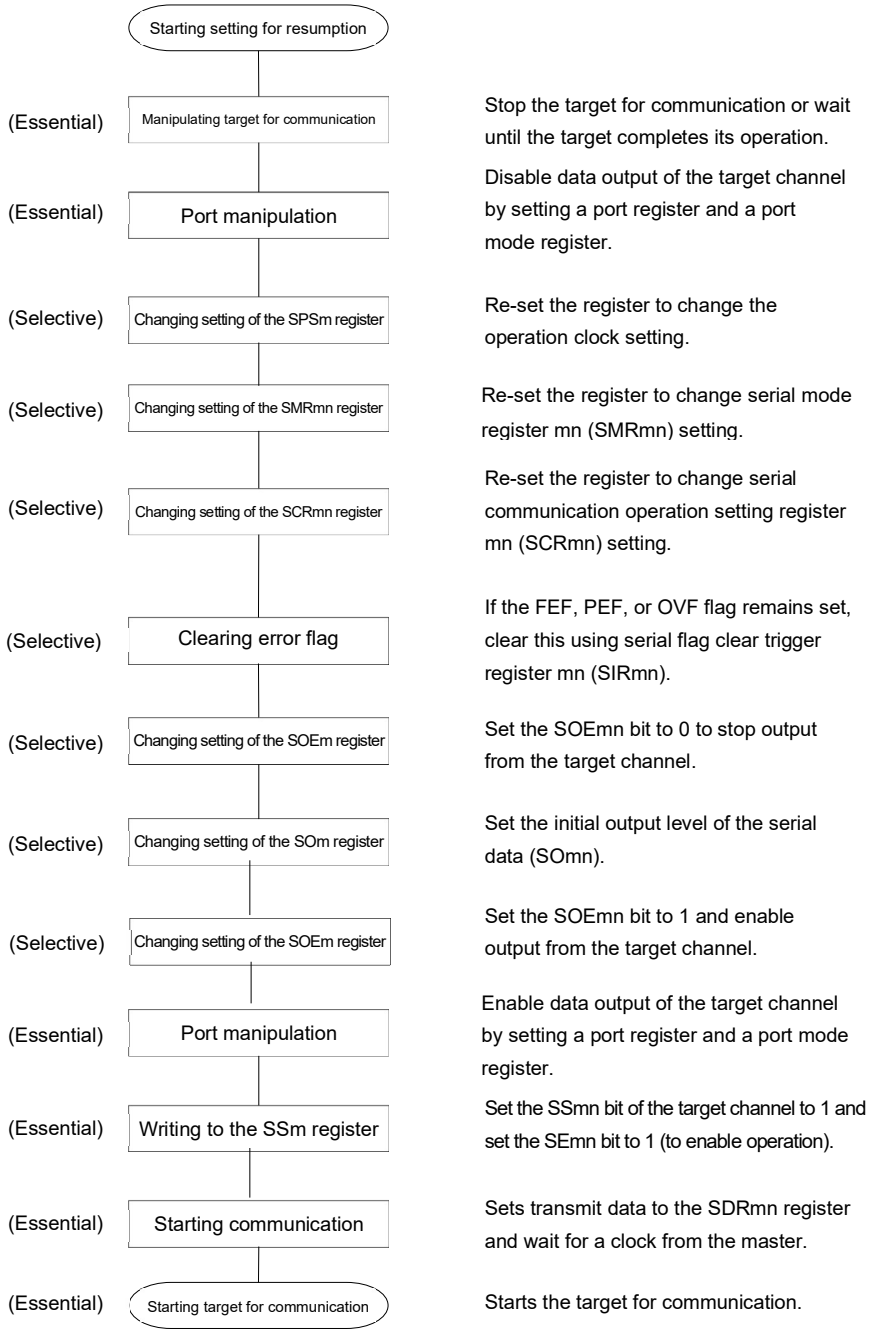

Caution Be sure to set transmit data to the SDRpL register before the clock from the master is started.

Remark m: Unit number (m = 0, 1), n: Channel number (n = 0, 1), p: CSI number (p = 00, 01, 10, 11), mn = 00, 01, 10, 11

(3) Processing flow (in single-transmission/reception mode)

Figure 15-67. Timing Chart of Slave Transmission/Reception (in Single-Transmission/Reception Mode) (Type 1: DAPmn = 0, CKPmn = 0)

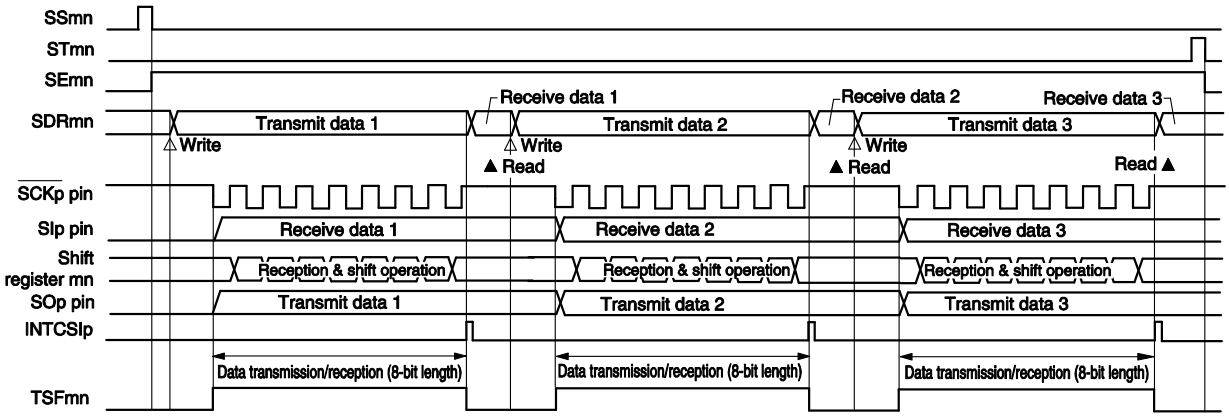

Remark m: Unit number (m = 0, 1), n: Channel number (n = 0, 1), p: CSI number (p = 00, 01, 10, 11), mn = 00, 01, 10, 11

Figure 15-68. Flowchart of Slave Transmission/Reception (in Single-Transmission/Reception Mode)

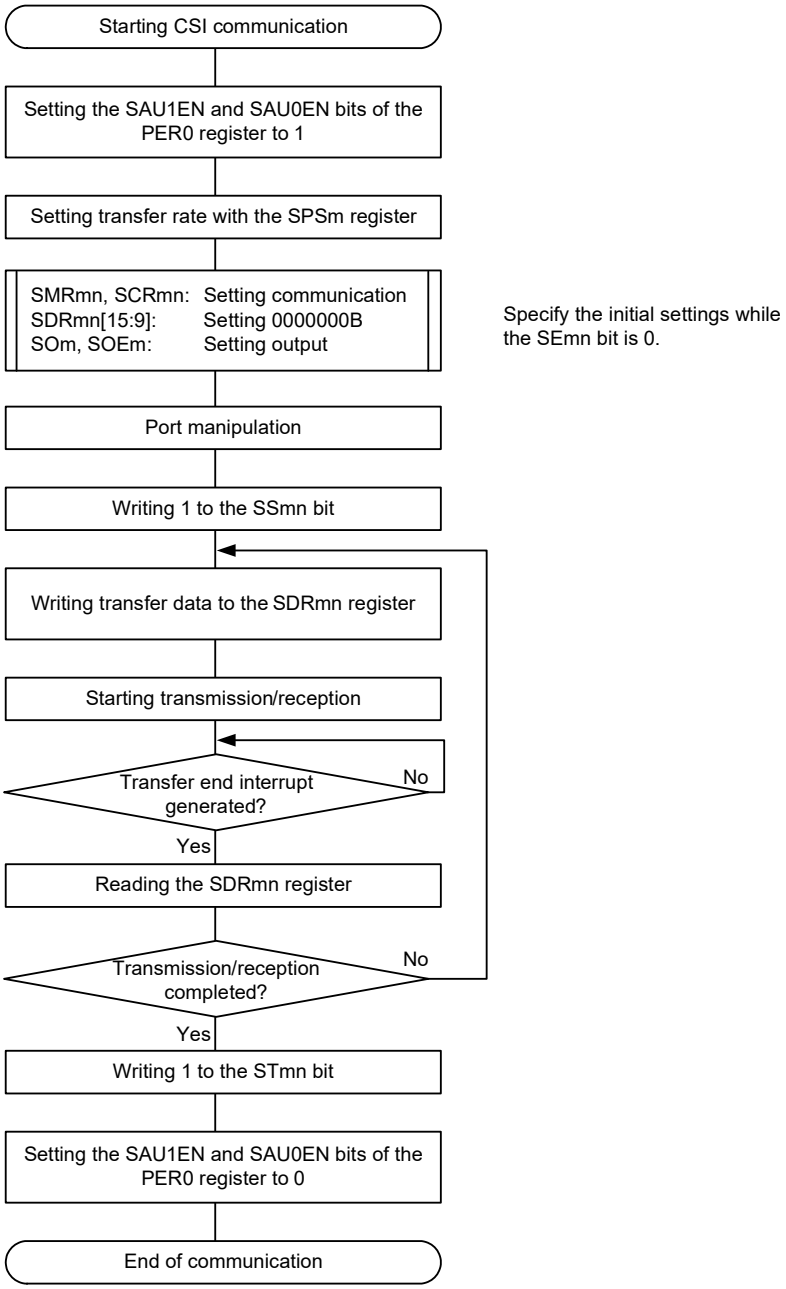

Caution Be sure to set transmit data to the SDRpL register before the clock from the master is started.

Remark m: Unit number (m = 0, 1), n: Channel number (n = 0, 1), p: CSI number (p = 00, 01, 10, 11), mn = 00, 01, 10, 11

(4) Processing flow (in continuous transmission/reception mode)

Figure 15-69. Timing Chart of Slave Transmission/Reception (in Continuous Transmission/Reception Mode) (Type 1: DAPmn = 0, CKPmn = 0)

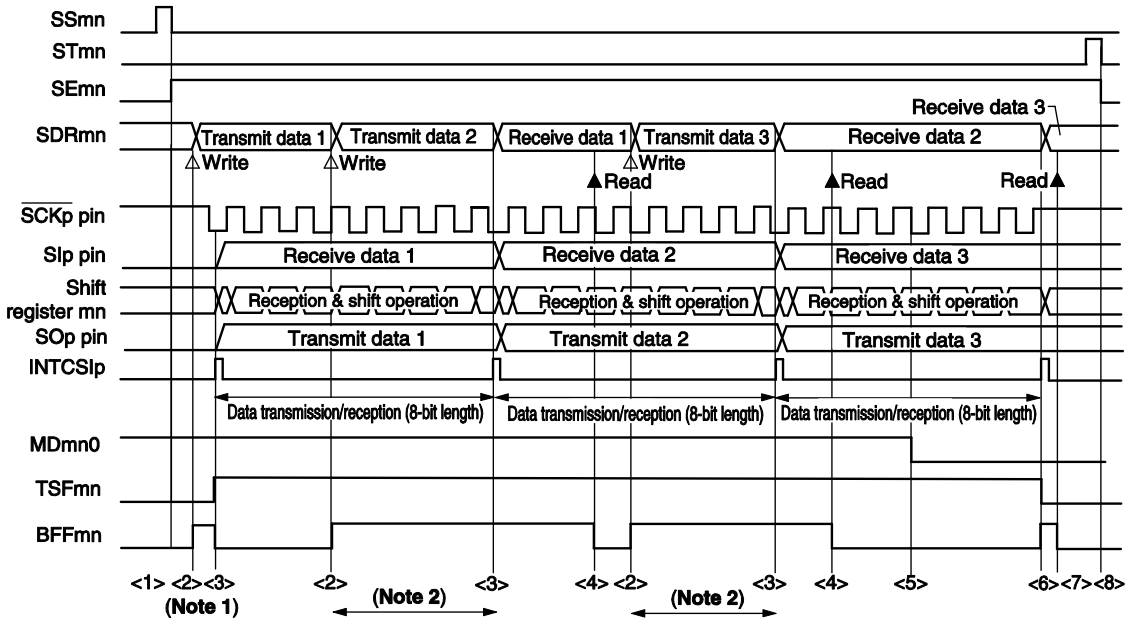

Notes 1. If transmit data is written to the SDRmn register while the BFFmn bit of serial status register mn (SSRmn) is 1 (valid data is stored in serial data register mn (SDRmn)), the transmit data is overwritten.

2. The transmit data can be read by reading the SDRmn register during this period. At this time, the transfer operation is not affected.

Caution The MDmn0 bit of serial mode register mn (SMRmn) can be rewritten even during operation. However, rewrite it before transfer of the last bit is started, so that it has been rewritten before the transfer end interrupt of the last transmit data.

Remarks 1. <1> to <8> in the figure correspond to <1> to <8> in **Figure 15-70 Flowchart of Slave Transmission/Reception (in Continuous Transmission/Reception Mode)**.

2. m: Unit number (m = 0, 1), n: Channel number (n = 0, 1), p: CSI number (p = 00, 01, 10, 11), mn = 00, 01, 10, 11

Figure 15-70. Flowchart of Slave Transmission/Reception (in Continuous Transmission/Reception Mode)

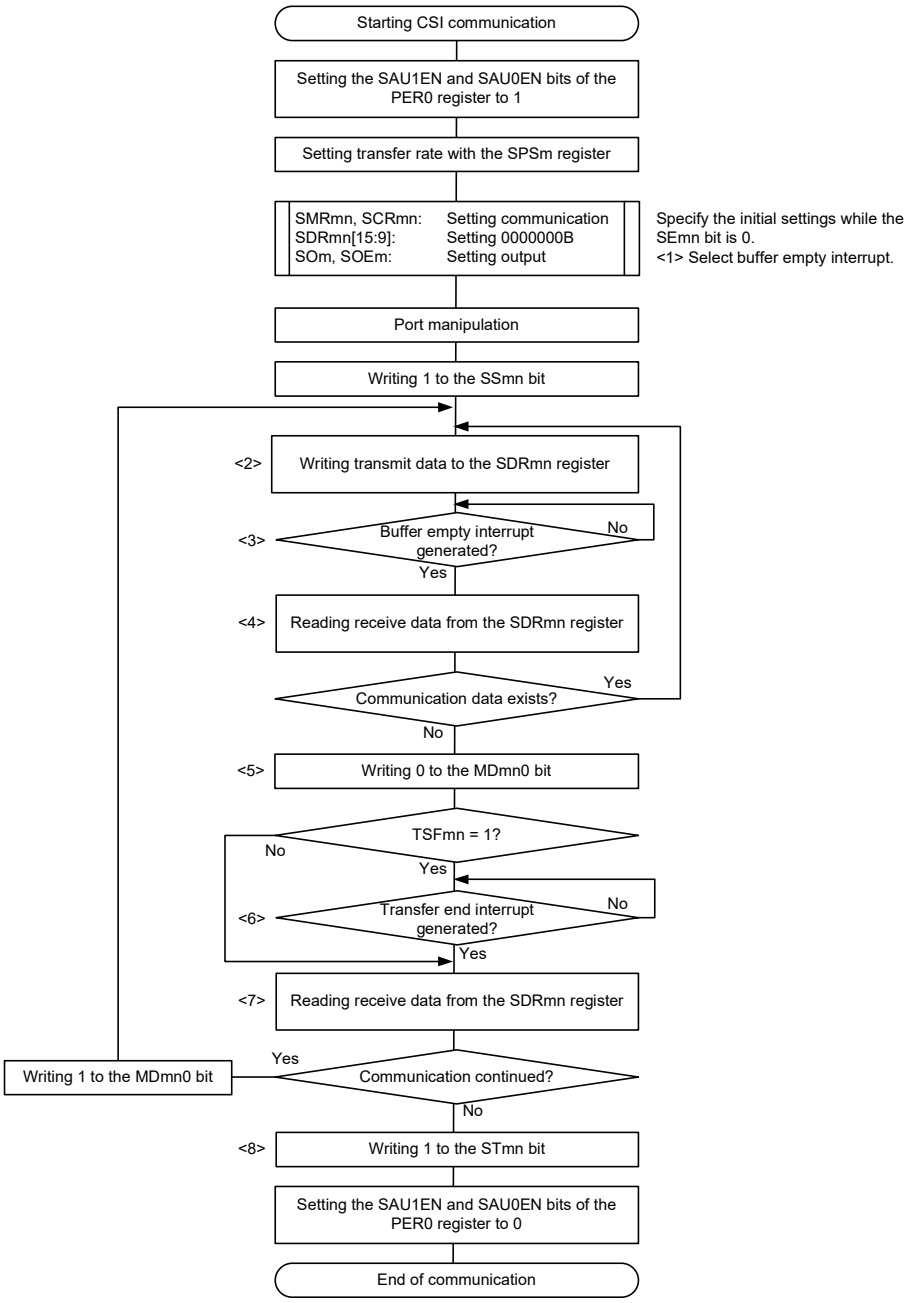

Caution Be sure to set transmit data to the SDRpL register before the clock from the master is started.

Remarks 1. <1> to <8> in the figure correspond to <1> to <8> in **Figure 15-69 Timing Chart of Slave Transmission/Reception (in Continuous Transmission/Reception Mode)**.

2. m: Unit number (m = 0, 1), n: Channel number (n = 0, 1), p: CSI number (p = 00, 01, 10, 11), mn = 00, 01, 10, 11

15.5.7 Calculating transfer clock frequency

The transfer clock frequency for 3-wire serial I/O (CSI00, CSI01, CSI10, CSI11) communication can be calculated by the following expressions.

(1) Master

(Transfer clock frequency) = {Operation clock (f_{MCK}) frequency of target channel} ÷ (SDRmn[15:9] + 1) ÷ 2 [Hz]

(2) Slave

(Transfer clock frequency) = {Frequency of serial clock (f_{SCK}) supplied by master}[Note] [Hz]

Note The permissible maximum transfer clock frequency is $f_{MCK}/6$.

Remark The value of SDRmn[15:9] is the value of bits 15 to 9 of serial data register mn (SDRmn) (0000000B to 1111111B) and therefore is 0 to 127.

The operation clock (f_{MCK}) is determined by serial clock select register m (SPSm) and bit 15 (CKSmn) of serial mode register mn (SMRmn).

Table 15-2. Selection of Operation Clock For 3-Wire Serial I/O

SMRmn Register	SPSm Register								Operation Clock (f_{MCK}) Note	
CKSmn	PRS m13	PRS m12	PRS m11	PRS m10	PRS m03	PRS m02	PRS m01	PRS m00		f_{CLK} = 32 MHz
0	X	X	X	X	0	0	0	0	f_{CLK}	32 MHz
	X	X	X	X	0	0	0	1	$f_{CLK}/2$	16 MHz
	X	X	X	X	0	0	1	0	$f_{CLK}/2^2$	8 MHz
	X	X	X	X	0	0	1	1	$f_{CLK}/2^3$	4 MHz
	X	X	X	X	0	1	0	0	$f_{CLK}/2^4$	2 MHz
	X	X	X	X	0	1	0	1	$f_{CLK}/2^5$	1 MHz
	X	X	X	X	0	1	1	0	$f_{CLK}/2^6$	500 kHz
	X	X	X	X	0	1	1	1	$f_{CLK}/2^7$	250 kHz
	X	X	X	X	1	0	0	0	$f_{CLK}/2^8$	125 kHz
	X	X	X	X	1	0	0	1	$f_{CLK}/2^9$	62.5 kHz
	X	X	X	X	1	0	1	0	$f_{CLK}/2^{10}$	31.25 kHz
	X	X	X	X	1	0	1	1	$f_{CLK}/2^{11}$	15.63 kHz
1	0	0	0	0	X	X	X	X	f_{CLK}	32 MHz
	0	0	0	1	X	X	X	X	$f_{CLK}/2$	16 MHz
	0	0	1	0	X	X	X	X	$f_{CLK}/2^2$	8 MHz
	0	0	1	1	X	X	X	X	$f_{CLK}/2^3$	4 MHz
	0	1	0	0	X	X	X	X	$f_{CLK}/2^4$	2 MHz
	0	1	0	1	X	X	X	X	$f_{CLK}/2^5$	1 MHz
	0	1	1	0	X	X	X	X	$f_{CLK}/2^6$	500 kHz
	0	1	1	1	X	X	X	X	$f_{CLK}/2^7$	250 kHz
	1	0	0	0	X	X	X	X	$f_{CLK}/2^8$	125 kHz
	1	0	0	1	X	X	X	X	$f_{CLK}/2^9$	62.5 kHz
	1	0	1	0	X	X	X	X	$f_{CLK}/2^{10}$	31.25 kHz
	1	0	1	1	X	X	X	X	$f_{CLK}/2^{11}$	15.63 kHz
Other than above										Setting prohibited

Note When changing the clock selected for f_{CLK} (by changing the system clock control register (CKC) value), do so after having stopped (serial channel stop register m (STm) = 0003H) the operation of the serial array unit (SAU).

Remarks 1. X: Don't care

2. m: Unit number (m = 0, 1), n: Channel number (n = 0, 1), mn = 00, 01, 10, 11

15.5.8 Procedure for processing errors that occurred during 3-wire serial I/O (CSI00, CSI01, CSI10, CSI11) communication

The procedure for processing errors that occurred during 3-wire serial I/O (CSI00, CSI01, CSI10, CSI11) communication is described in Figure 15-71.

Figure 15-71. Processing Procedure in Case of Overrun Error

Software Manipulation	Hardware Status	Remark
Reads serial data register mn (SDRmn). →	The BFFmn bit of the SSRmn register is set to 0 and channel n is enabled to receive data.	This is to prevent an overrun error if the next reception is completed during error processing.
Reads serial status register mn (SSRmn).		Error type is identified and the read value is used to clear error flag.
Writes 1 to serial flag clear trigger register mn (SIRmn). →	Error flag is cleared.	Error can be cleared only during reading, by writing the value read from the SSRmn register to the SIRmn register without modification.

Remark m: Unit number (m = 0, 1), n: Channel number (n = 0, 1), mn = 00, 01, 10, 11

15.6 Clock Synchronous Serial Communication with SPI Function

All the channels (channels 0 and 1 of SAU0 and channels 0 and 1 of SAU1) correspond to the clock synchronous serial communication with SPI function.

[Data transmission/reception]

- Data length of 7 to 16 bits
- Phase control of transmit/receive data
- MSB/LSB first selectable
- Level setting of transmit/receive data

[Clock control]

- Master/slave selection
- Phase control of I/O clock
- Setting of transfer period by prescaler and internal counter of each channel

[Interrupt function]

- Transfer end interrupt/buffer empty interrupt

[Error detection flag]

- Overrun error

[Expansion function]

- Slave select function

- Group A products

Unit	Channel	Used as CSI	Used as UART	Used as Simplified I^{2}C
0	0	CSI00 (supporting SPI function) Note2	UART0 (supporting LIN-bus)	IIC00
	1	CSI01 (supporting SPI function) Note2		IIC01

- Products of Groups C-1 and D-1

Unit	Channel	Used as CSI	Used as UART	Used as Simplified I^{2}C
0	0	CSI00 (supporting SPI function) Note2	UART0 (supporting LIN-bus)	IIC00
	1	CSI01 (supporting SPI function) Note2		IIC01
1	0	CSI10 (supporting SPI function) Note1, 2	UART1	IIC10
	1	-		-

- Products of Groups B, C-2, D-2, and E

Unit	Channel	Used as CSI	Used as UART	Used as Simplified I^{2}C
0	0	CSI00 (supporting SPI function) Note2	UART0 (supporting LIN-bus)	IIC00
	1	CSI01 (supporting SPI function) Note2		IIC01
1	0	CSI10 (supporting SPI function) Note1, 2	UART1	IIC10
	1	CSI11 (supporting SPI function) Note2		IIC11

Notes 1. 48-pin, 32-pin and 30-pin products do not have $\overline{\text{SSI10}}$ pin.

2. Set CKPmn bit of SCRmn register to 1, when SSEmn = 1 (Enables $\overline{\text{SSImn}}$ pin input).
(m = 0, 1, n = 0, 1)

Remark Group A: RL78/F13 (LIN incorporated) products with 20, 30, 32, 48, or 64 pins and 16 Kbytes to 64 Kbytes of code flash memory
Group B: RL78/F13 (LIN incorporated) products with 48 or 64 pins and 96 Kbytes to 128 Kbytes of code flash memory or with 80 pins and 64 Kbytes to 128 Kbytes of code flash memory
Group C-1: RL78/F13 (CAN and LIN incorporated) products with 30 or 32 pins
Group C-2: RL78/F13 (CAN and LIN incorporated) products with 48, 64, or 80 pins
Group D-1: RL78/F14 products with 30 or 32 pins
Group D-2: RL78/F14 products with 48, 64, or 80 pins and 48 Kbytes to 96 Kbytes of code flash memory
Group E: RL78/F14 products with 48, 64, or 80 pins and 128 Kbytes to 256 Kbytes of code flash memory or with 100 pins and 64 Kbytes to 256 Kbytes of code flash memory

<R> SPI function performs the following six types of communication operations.

- Master transmission (See **15.6.1 Master transmission**.)
- Master reception (See **15.6.2 Master reception**.)
- Master transmission/reception (See **15.6.3 Master transmission/reception**.)
- Slave transmission (See **15.6.4 Slave transmission**.)
- Slave reception (See **15.6.5 Slave reception**.)
- Slave transmission/reception (See **15.6.6 Slave transmission/reception**.)

Multiple slaves can be connected to a master and communication can be performed by using the slave select input function. The master outputs a slave select signal to the slave (one) that is the other party of communication, and each slave judges whether it has been selected as the other party of communication and controls the SO pin output. When a slave is selected, the SO pin is set to output state and transmit data can be communicated from the SO pin to the master. When a slave is not selected, the SO pin is set to Hi-Z state and prevents the short circuit with the output from the SO pin of other slaves. Therefore, in an environment where multiple slaves are connected, it is necessary set the SO pin to N-ch open-drain and pull up the node. Furthermore, when a slave is not selected, no transmission/reception operation is performed even if a serial clock is input from the master.

Caution Output the slave select signal by port manipulation.

Figure 15-72. Example of Slave Select Input Function Configuration

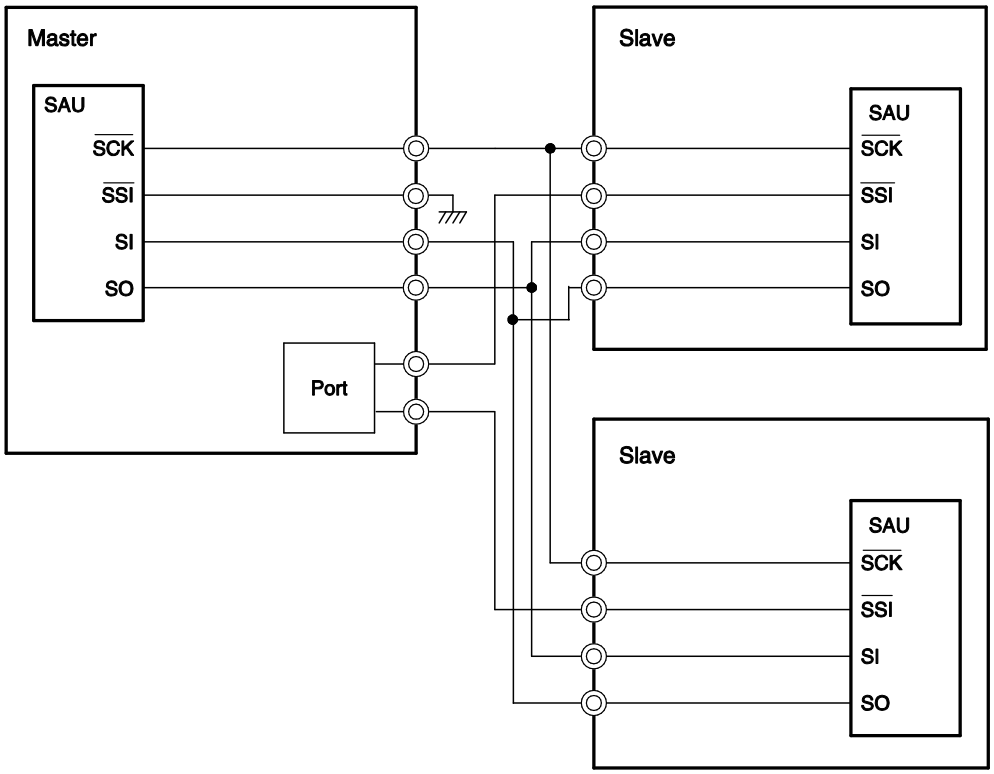

Figure 15-73. Slave Select Input Function Timing Diagram

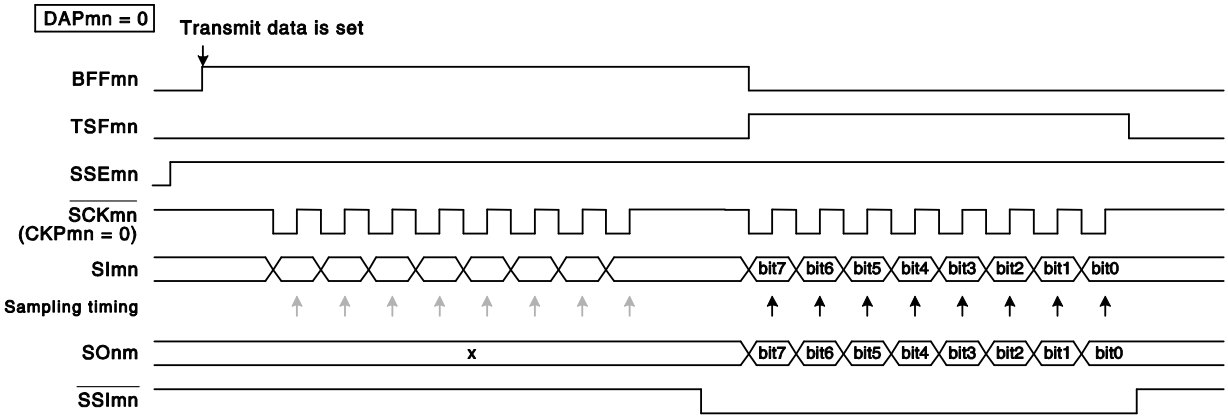

While $\overline{\text{SSImn}}$ is at high level, transmission is not performed even if the falling edge of $\overline{\text{SCKmn}}$ (serial clock) arrives, and neither is receive data sampled in synchronization with the rising edge.
When $\overline{\text{SSImn}}$ goes to low level, data is output (shifted) in synchronization with the falling edge of the serial clock and a reception operation is performed in synchronization with the rising edge.

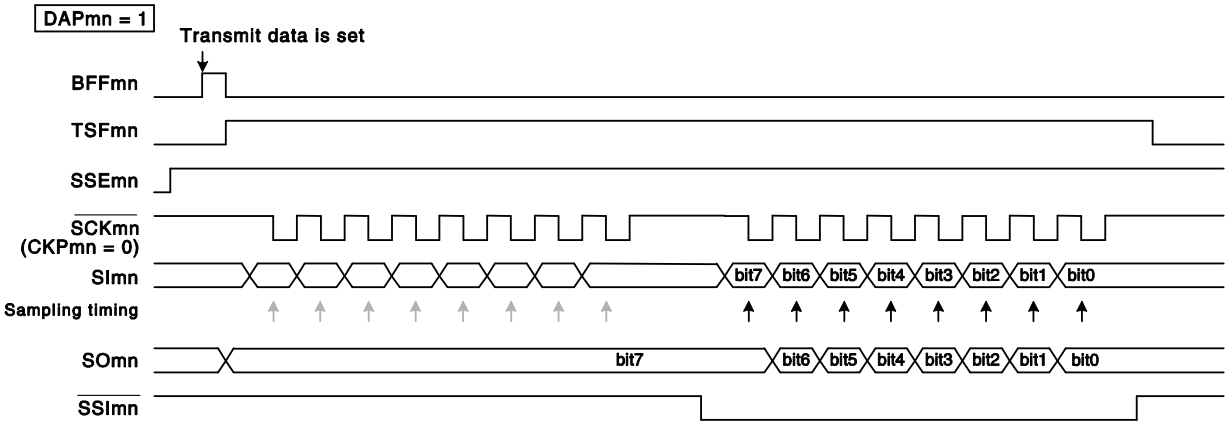

If DAPmn = 1, when transmit data is set while $\overline{\text{SSImn}}$ is at high level, the first data (bit 7) is output to the data output. However, no shift operation is performed even if the rising edge of $\overline{\text{SCKmn}}$ (serial clock) arrives, and neither is receive data sampled in synchronization with the falling edge. When $\overline{\text{SSImn}}$ goes to low level, data is output (shifted) in synchronization with the next rising edge and a reception operation is performed in synchronization with the falling edge.

Remark m: Unit number (m = 0, 1), n: Channel number (n = 0, 1)

15.6.1 Master transmission

Master transmission is an operation wherein this MCU outputs a transfer clock and transmits data to another device.

SPI Function	CSI00	CSI01	CSI10	CSI11
Target channel	Channel 0 of SAU0	Channel 1 of SAU0	Channel 0 of SAU1	Channel 1 of SAU1
Pins used	$\overline{\text{SCK00}}$, SO00	$\overline{\text{SCK01}}$, SO01	$\overline{\text{SCK10}}$, SO10	$\overline{\text{SCK11}}$, SO11
Interrupt	INTCSI00	INTCSI01	INTCSI10	INTCSI11
	Transfer end interrupt (in single-transfer mode) or buffer empty interrupt (in continuous transfer mode) can be selected.			
Error detection flag	None			
Transfer data length	7 to 16 bits			
Transfer rate	Max. $f_{MCK}/4$ [Hz], Min. $f_{CLK}/(2 \times 2^{11} \times 128)$ [Hz] Note f_{CLK}: System clock frequency			
Data phase	Selectable by the DAPmn bit of the SCRmn register • DAPmn = 0: Data output starts from the start of the serial clock operation. • DAPmn = 1: Data output starts half a clock before the start of the serial clock operation.			
Clock phase	Selectable by the CKPmn bit of the SCRmn register • CKPmn = 0: Forward • CKPmn = 1: Reverse			
Data direction	MSB or LSB first			

Note Use this operation within a range that satisfies the conditions above and the AC characteristics in the electrical specifications.

Remark m: Unit number (m = 0, 1), n: Channel number (n = 0, 1), mn = 00, 01, 10, 11

(1) Register setting

Figure 15-74. Example of Contents of Registers for Master Transmission of SPI Function (CSI00, CSI01, CSI10, CSI11) (1/2)

(a) Serial mode register mn (SMRmn)

	15	14	13	12	11	10	9	8	7	6	5	4	3	2	1	0
SMRmn	CKSmn 0/1	CCSmn 0	0	0	0	0	0	STSmn 0	0	SISmn0 0	0	0	0	MDmn2 0	MDmn1 0	MDmn0 0/1

Operation clock (f_{MCK}) of channel n
0: Prescaler output clock CKm0 set by the SPSm register
1: Prescaler output clock CKm1 set by the SPSm register

Interrupt source of channel n
0: Transfer end interrupt
1: Buffer empty interrupt

(b) Serial communication operation setting register mn (SCRmn)

	15	14	13	12	11	10	9	8	7	6	5	4	3	2	1	0
SCRmn	TXEmn 1	RXEmn 0	DAPmn 0/1	CKPmn 0/1	0	0	PTCmn1 0	PTCmn0 0	DIRmn 0/1	0	SLCmn1 0	SLCmn0 0	DLSmn3 0/1	DLSmn2 0/1	DLSmn1 0/1	DLSmn0 0/1

Selection of the data and clock phase (For details about the setting, see **15.3 Registers Controlling Serial Array Unit**.)

Selection of data transfer sequence
0: Inputs/outputs data with MSB first
1: Inputs/outputs data with LSB first.

Setting of data length

(c) Serial data register mn (SDRmn)

(1) When operation is stopped (SEmn = 0)

	15	14	13	12	11	10	9	8	7	6	5	4	3	2	1	0
SDRmn	Baud rate setting							0	0	0	0	0	0	0	0	0

(2) When operation is in progress (SEmn = 1) (Lower 8 bits: SDRpL)

	15	14	13	12	11	10	9	8	7	6	5	4	3	2	1	0
SDRmn	Transmit data setting															

SDRpL

Remarks 1. m: Unit number (m = 0, 1), n: Channel number (n = 0, 1), p: CSI number (p = 00, 01, 10, 11), mn = 00, 01, 10, 11

2. ☐ : Setting is fixed in the CSI master transmission mode, ▒ : Setting disabled (set to the initial value)
0/1: Set to 0 or 1 depending on the usage of the user

Figure 15-74. Example of Contents of Registers for Master Transmission of SPI Function (CSI00, CSI01, CSI10, CSI11) (2/2)

(d) Serial output register m (SOm) … Sets only the bits of the target channel.

	15	14	13	12	11	10	9	8	7	6	5	4	3	2	1	0
SOm	0	0	0	0	0	0	CKOm1 0/1	CKOm0 0/1	0	0	0	0	0	0	SOm1 0/1	SOm0 0/1

Communication starts when these bits are 1 if the clock phase is forward (the CKPmn bit of the SCRmn = 0). If the clock phase is reversed (CKPmn = 1), communication starts when these bits are 0.

(e) Serial output enable register m (SOEm) … Sets only the bits of the target channel to 1.

	15	14	13	12	11	10	9	8	7	6	5	4	3	2	1	0
SOEm	0	0	0	0	0	0	0	0	0	0	0	0	0	0	SOEm1 0/1	SOEm0 0/1

(f) Serial channel start register m (SSm) … Sets only the bits of the target channel to 1.

	15	14	13	12	11	10	9	8	7	6	5	4	3	2	1	0
SSm	0	0	0	0	0	0	0	0	0	0	0	0	0	0	SSm1 0/1	SSm0 0/1

Remarks 1. m: Unit number (m = 0, 1), n: Channel number (n = 0, 1), p: CSI number (p = 00, 01, 10, 11), mn = 00, 01, 10, 11

2. ☐ : Setting is fixed in the CSI master transmission mode, ▒ : Setting disabled (set to the initial value)
0/1: Set to 0 or 1 depending on the usage of the user

(2) Operation procedure

Figure 15-75. Initial Setting Procedure for Master Transmission

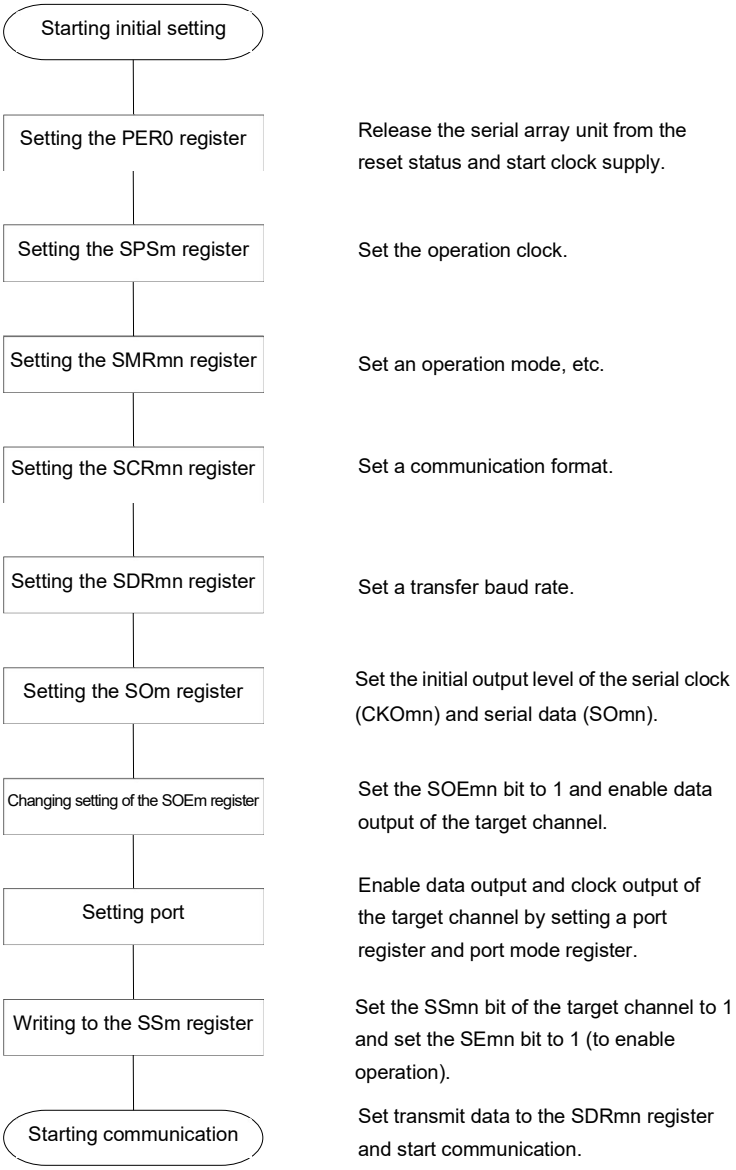

Remark m: Unit number (m = 0, 1), n: Channel number (n = 0, 1), mn = 00, 01, 10, 11

Figure 15-76. Procedure for Stopping Master Transmission

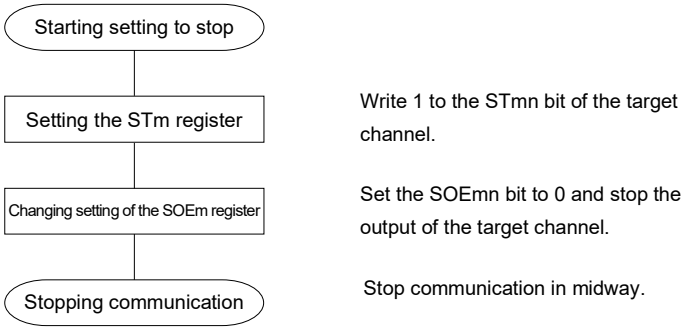

Remarks 1. Even after communication is stopped, the pin level is retained. To resume the operation, re-set the SOm register (see **Figure 15-77 Procedure for Resuming Master Transmission**).

2. m: Unit number (m = 0, 1), n: Channel number (n = 0, 1), mn = 00, 01, 10, 11

Figure 15-77. Procedure for Resuming Master Transmission

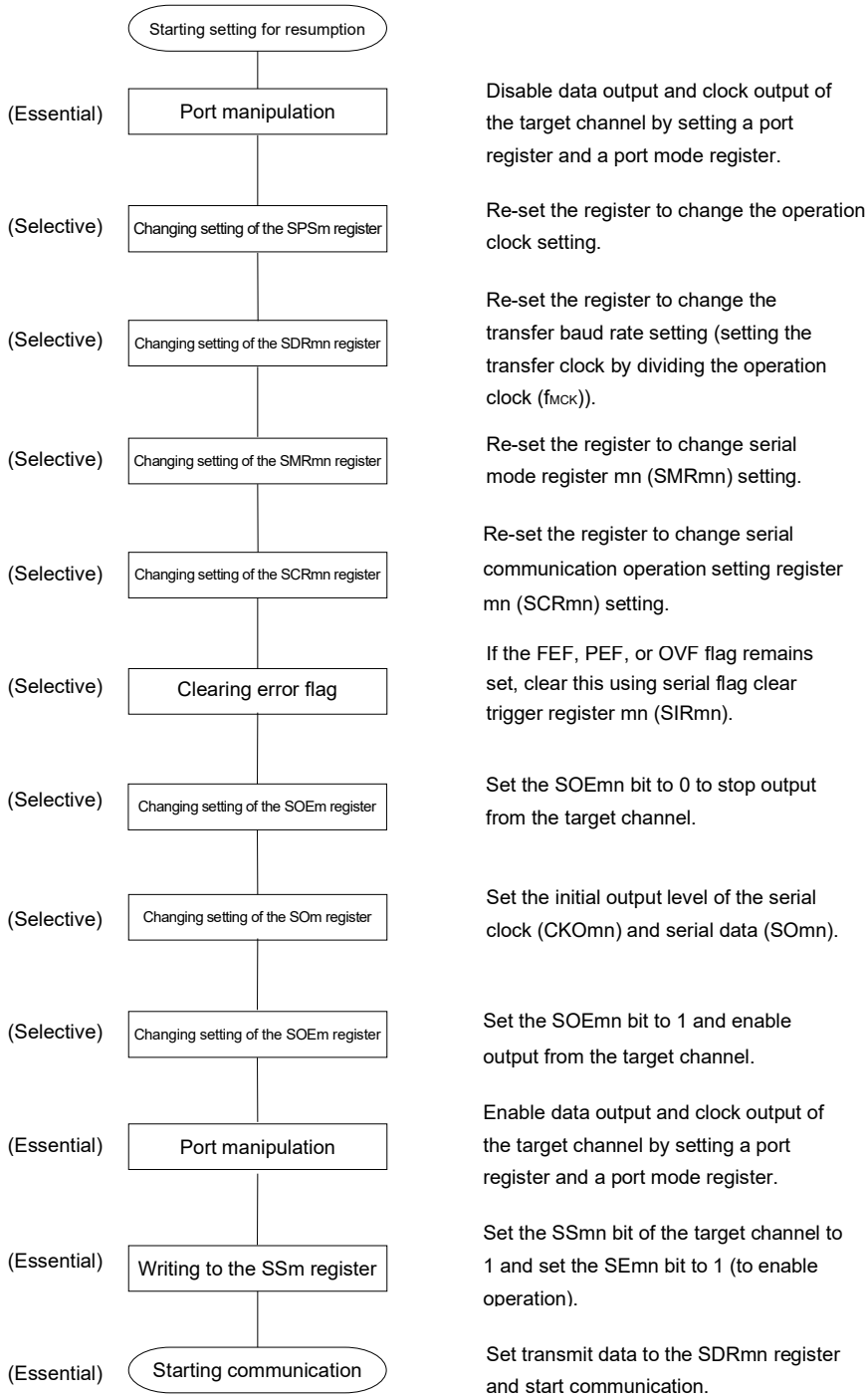

Remark m: Unit number (m = 0, 1), n: Channel number (n = 0, 1), mn = 00, 01, 10, 11

(3) Processing flow (in single-transmission mode)

Figure 15-78. Timing Chart of Master Transmission (in Single-Transmission Mode)
(Type 1: DAPmn = 0, CKPmn = 0)

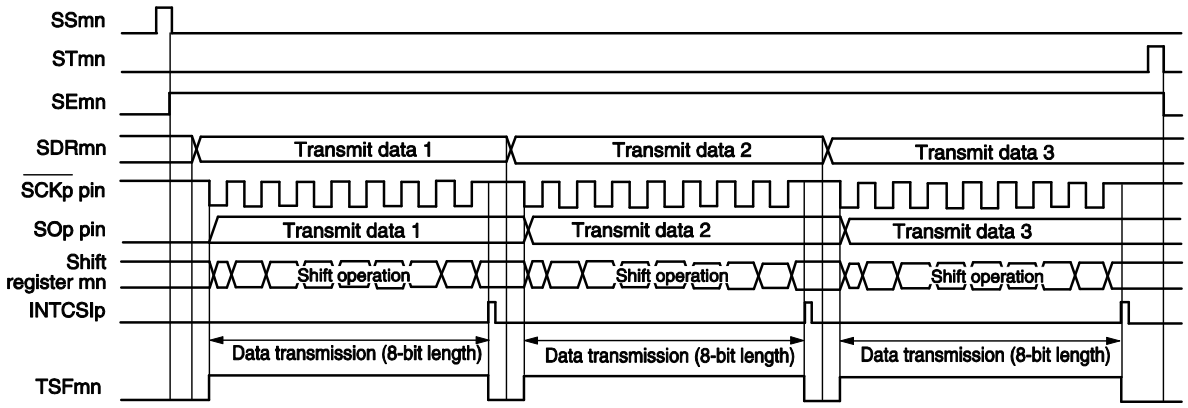

Remark m: Unit number (m = 0, 1), n: Channel number (n = 0, 1), p: CSI number (p = 00, 01, 10, 11), mn = 00, 01, 10, 11

Figure 15-79. Flowchart of Master Transmission (in Single-Transmission Mode)

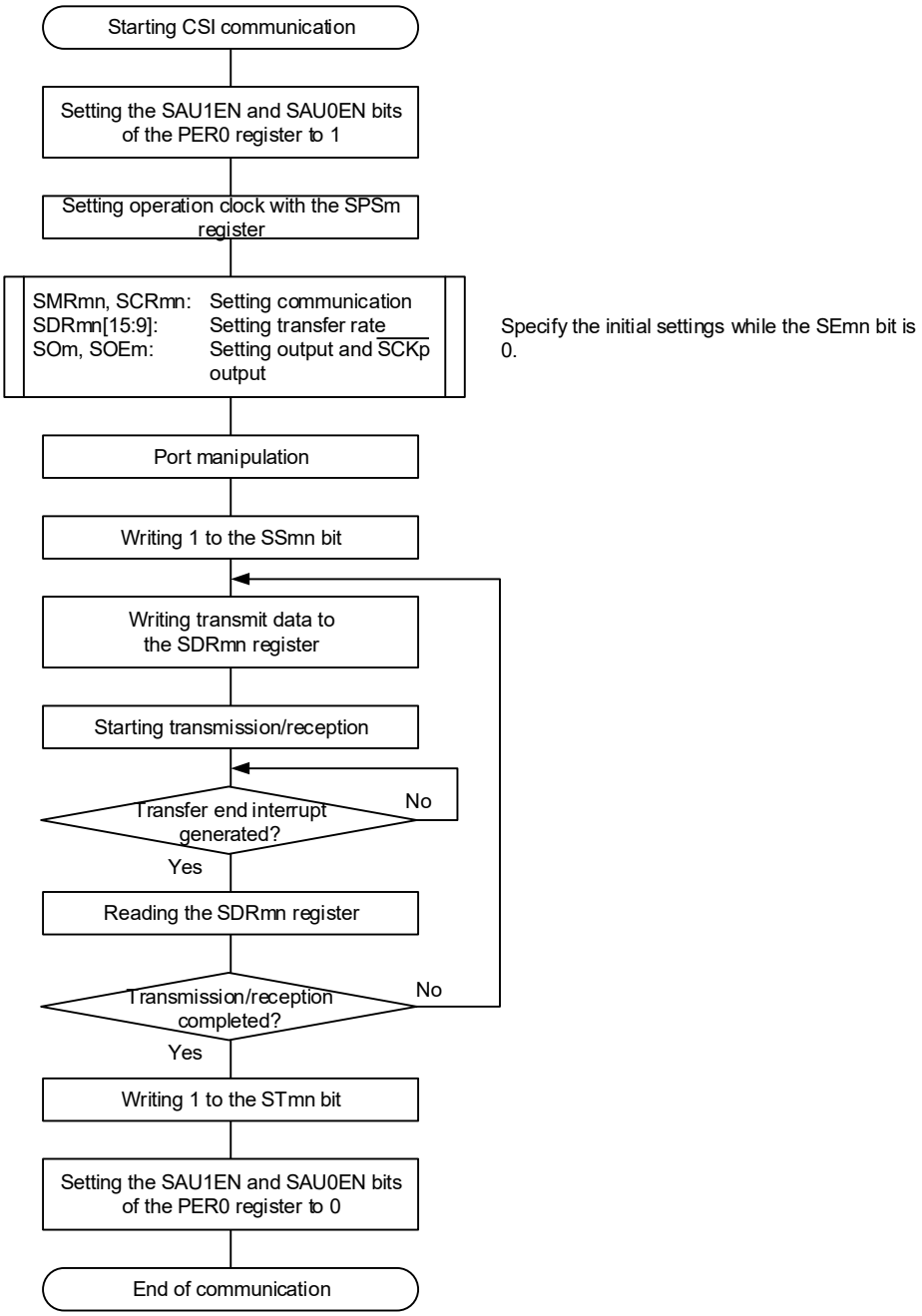

Remark m: Unit number (m = 0, 1), n: Channel number (n = 0, 1), mn = 00, 01, 10, 11

(4) Processing flow (in continuous transmission mode)

Figure 15-80. Timing Chart of Master Transmission (in Continuous Transmission Mode)
(Type 1: DAPmn = 0, CKPmn = 0)

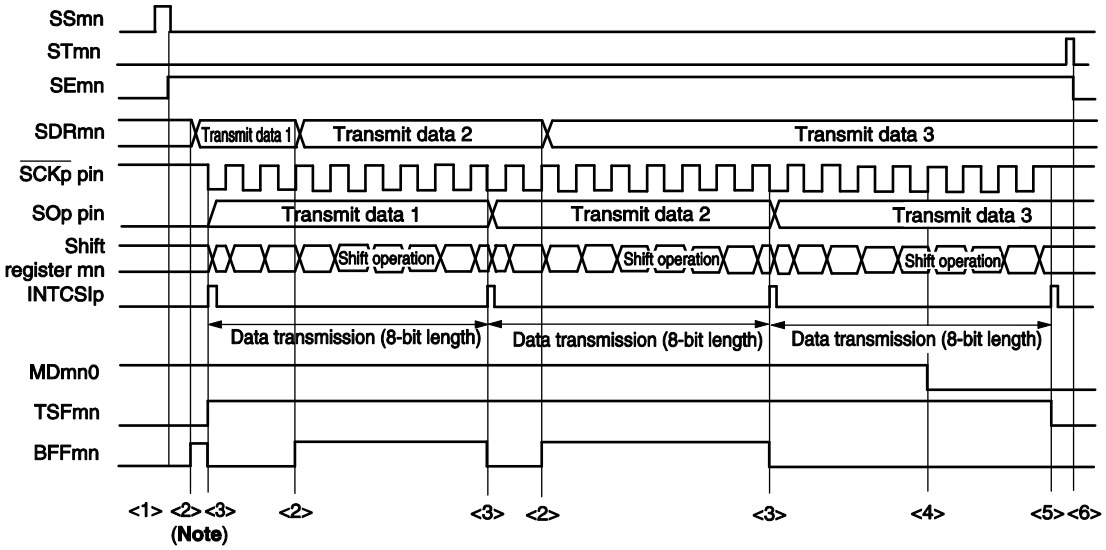

Note If transmit data is written to the SDRmn register while the BFFmn bit of serial status register mn (SSRmn) is 1 (valid data is stored in serial data register mn (SDRmn)), the transmit data is overwritten.

Caution **The MDmn0 bit of serial mode register mn (SMRmn) can be rewritten even during operation. However, rewrite it before transfer of the last bit is started, so that it will be rewritten before the transfer end interrupt of the last transmit data.**

Remark m: Unit number (m = 0, 1), n: Channel number (n = 0, 1), p: CSI number (p = 00, 01, 10, 11), mn = 00, 01, 10, 11

Figure 15-81. Flowchart of Master Transmission (in Continuous Transmission Mode)

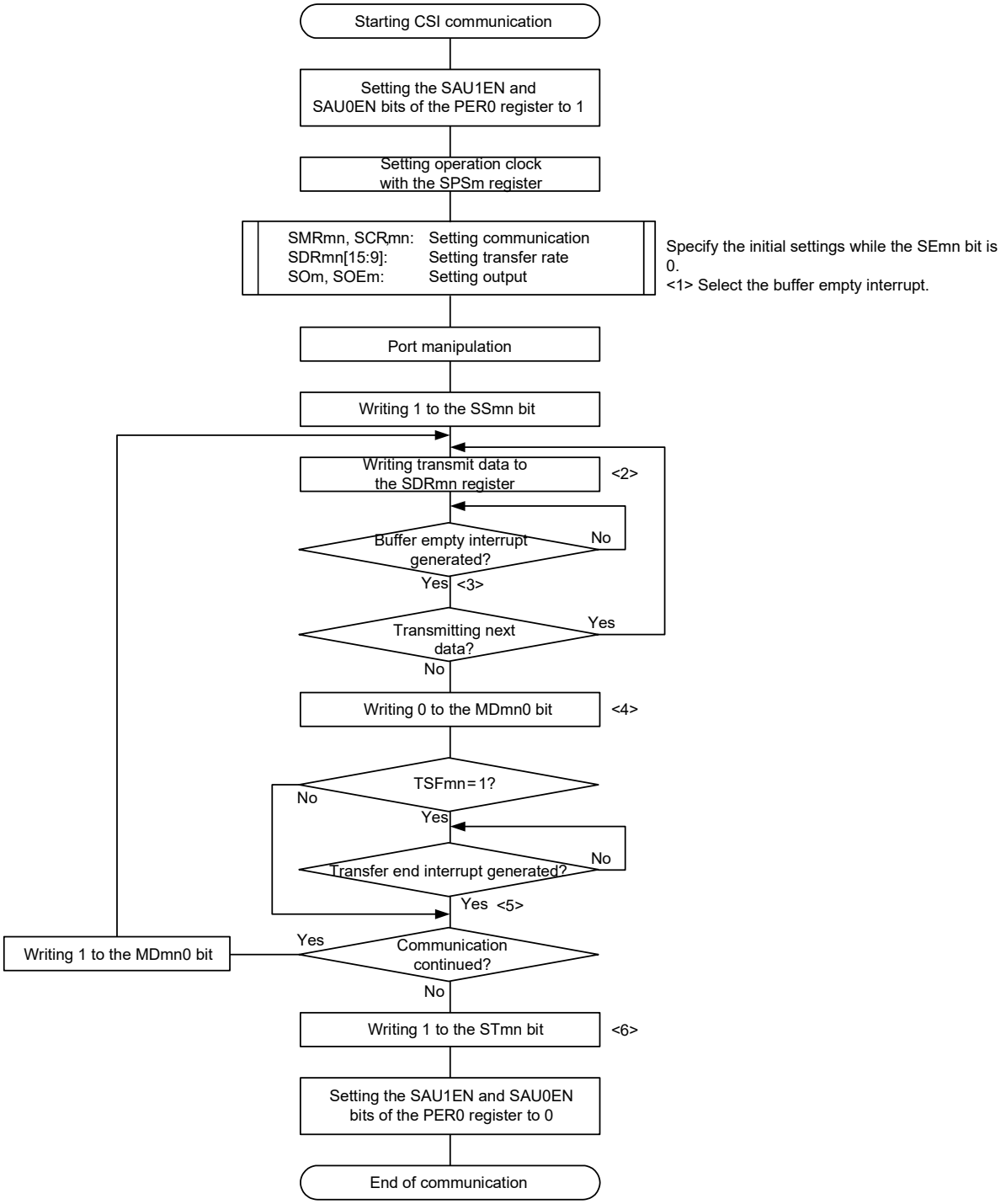

Remarks 1. <1> to <6> in the figure correspond to <1> to <6> in **Figure 15-80 Timing Chart of Master Transmission (in Continuous Transmission Mode)**.

2. m: Unit number (m = 0, 1), n: Channel number (n = 0, 1), mn = 00, 01, 10, 11

15.6.2 Master reception

Master reception is an operation wherein this MCU outputs a transfer clock and receives data from other device.

SPI Function	CSI00	CSI01	CSI10	CSI11
Target channel	Channel 0 of SAU0	Channel 1 of SAU0	Channel 0 of SAU1	Channel 1 of SAU1
Pins used	$\overline{\text{SCK00}}$, SI00	$\overline{\text{SCK01}}$, SI01	$\overline{\text{SCK10}}$, SI10	$\overline{\text{SCK11}}$, SI11
Interrupt	INTCSI00	INTCSI01	INTCSI10	INTCSI11
	Transfer end interrupt (in single-transfer mode) or buffer empty interrupt (in continuous transfer mode) can be selected.			
Error detection flag	Overrun error detection flag (OVFmn) only			
Transfer data length	7 to 16 bits			
Transfer rate	Max. $f_{MCK}/4$ [Hz], Min. $f_{CLK}/(2 \times 2^{11} \times 128)$ [Hz]**Note** f_{CLK}: System clock frequency			
Data phase	Selectable by the DAPmn bit of the SCRmn register • DAPmn = 0: Data input starts from the start of the serial clock operation. • DAPmn = 1: Data input starts half a clock before the start of the serial clock operation.			
Clock phase	Selectable by the CKPmn bit of the SCRmn register • CKPmn = 0: Forward • CKPmn = 1: Reverse			
Data direction	MSB or LSB first			

Note Use this operation within a range that satisfies the conditions above and the AC characteristics in the electrical specifications.

Remark m: Unit number (m = 0, 1), n: Channel number (n = 0, 1), mn = 00, 01, 10, 11

(1) Register setting

Figure 15-82. Example of Contents of Registers for Master Reception of SPI Function (CSI00, CSI01, CSI10, CSI11) (1/2)

(a) Serial mode register mn (SMRmn)

	15	14	13	12	11	10	9	8	7	6	5	4	3	2	1	0
SMRmn	CKSmn 0/1	CCSmn 0	0	0	0	0	0	STSmn 0	0	SISmn0 0	0	0	0	MDmn2 0	MDmn1 0	MDmn0 0/1

Operation clock (f_{MCK}) of channel n
0: Prescaler output clock CKm0 set by the SPSm register
1: Prescaler output clock CKm1 set by the SPSm register

Interrupt source of channel n
0: Transfer end interrupt
1: Buffer empty interrupt

(b) Serial communication operation setting register mn (SCRmn)

	15	14	13	12	11	10	9	8	7	6	5	4	3	2	1	0
SCRmn	TXEmn 0	RXEmn 1	DAPmn 0/1	CKPmn 0/1	0	0	PTCmn1 0	PTCmn0 0	DIRmn 0/1	0	SLCmn1 0	SLCmn0 0	DLSmn3 0/1	DLSmn2 0/1	DLSmn1 0/1	DLSmn0 0/1

Selection of the data and clock phase (For details about the setting, see **15.3 Registers Controlling Serial Array Unit**.)

Selection of data transfer sequence
0: Inputs/outputs data with MSB first
1: Inputs/outputs data with LSB first.

Setting of data length

(c) Serial data register mn (SDRmn)

(1) When operation is stopped (SEmn = 0)

	15	14	13	12	11	10	9	8	7	6	5	4	3	2	1	0
SDRmn	Baud rate setting							0	0	0	0	0	0	0	0	0

(2) When operation is in progress (SEmn = 1) (Lower 8 bits: SDRpL)

	15	14	13	12	11	10	9	8	7	6	5	4	3	2	1	0
SDRmn	Receive data (Write FFH as dummy data.)															

SDRpL

Remarks 1. m: Unit number (m = 0, 1), n: Channel number (n = 0, 1), p: CSI number (p = 00, 01, 10, 11), mn = 00, 01, 10, 11

2. □: Setting is fixed in the CSI master reception mode, ■: Setting disabled (set to the initial value)
×: Bit that cannot be used in this mode (set to the initial value when not used in any mode)
0/1: Set to 0 or 1 depending on the usage of the user

Figure 15-82. Example of Contents of Registers for Master Reception of SPI Function (CSI00, CSI01, CSI10, CSI11) (2/2)

(d) Serial output register m (SOm) … Sets only the bits of the target channel.

	15	14	13	12	11	10	9	8	7	6	5	4	3	2	1	0
SOm	0	0	0	0	0	0	CKOm1 0/1	CKOm0 0/1	0	0	0	0	0	0	SOm1 ×	SOm0 ×

Communication starts when these bits are 1 if the clock phase is forward (the CKPmn bit of the SCRmn = 0). If the clock phase is reversed (CKPmn = 1), communication starts when these bits are 0.

(e) Serial output enable register m (SOEm) …The register that not used in this mode.

	15	14	13	12	11	10	9	8	7	6	5	4	3	2	1	0
SOEm	0	0	0	0	0	0	0	0	0	0	0	0	0	0	SOEm1 ×	SOEm0 ×

(f) Serial channel start register m (SSm) … Sets only the bits of the target channel to 1.

	15	14	13	12	11	10	9	8	7	6	5	4	3	2	1	0
SSm	0	0	0	0	0	0	0	0	0	0	0	0	0	0	SSm1 0/1	SSm0 0/1

Remarks 1. m: Unit number (m = 0, 1), n: Channel number (n = 0, 1), p: CSI number (p = 00, 01, 10, 11), mn = 00, 01, 10, 11

2. ☐: Setting is fixed in the CSI master reception mode, ▒: Setting disabled (set to the initial value)
×: Bit that cannot be used in this mode (set to the initial value when not used in any mode)
0/1: Set to 0 or 1 depending on the usage of the user

(2) Operation procedure

Figure 15-83. Initial Setting Procedure for Master Reception

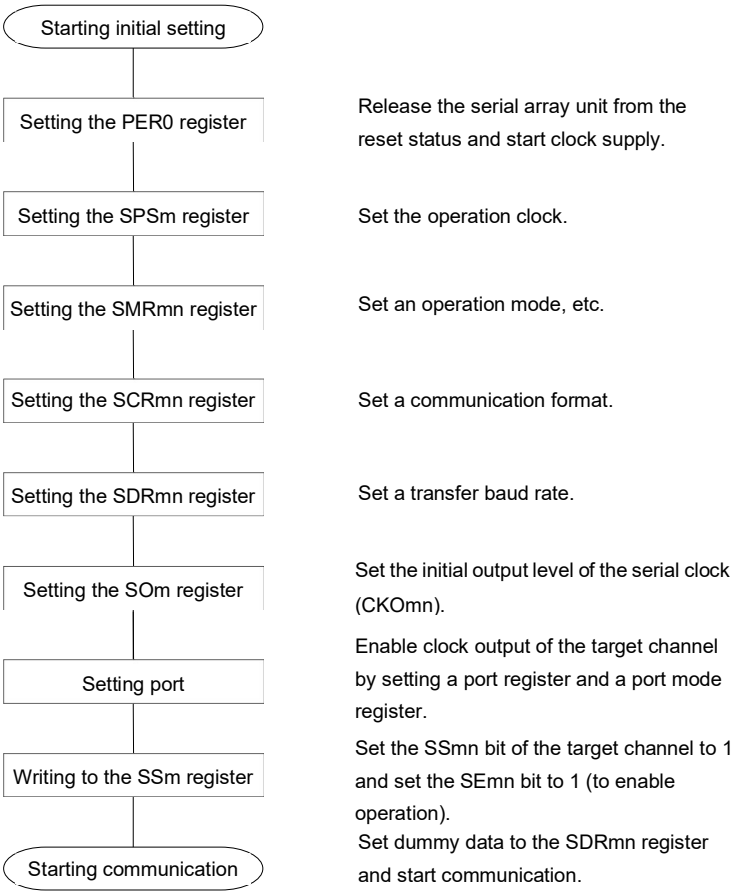

Figure 15-84. Procedure for Stopping Master Reception

Remarks 1. Even after communication is stopped, the pin level is retained. To resume the operation, re-set serial output register m (SOm) (see **Figure 15-85 Procedure for Resuming Master Reception**).

2. m: Unit number (m = 0, 1), n: Channel number (n = 0, 1), mn = 00, 01, 10, 11

Figure 15-85. Procedure for Resuming Master Reception

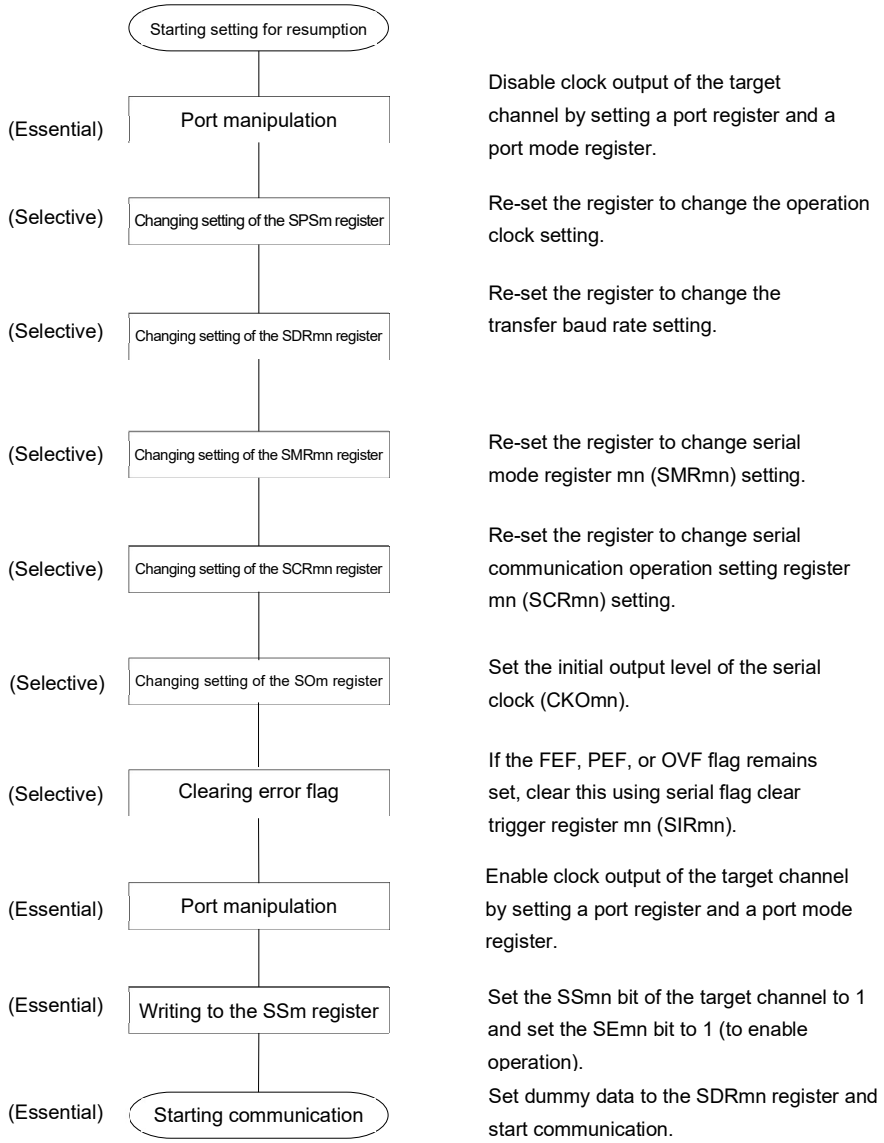

Remark m: Unit number (m = 0, 1), n: Channel number (n = 0, 1), mn = 00, 01, 10, 11

(3) Processing flow (in single-reception mode)

Figure 15-86. Timing Chart of Master Reception (in Single-Reception Mode)
(Type 1: DAPmn = 0, CKPmn = 0)

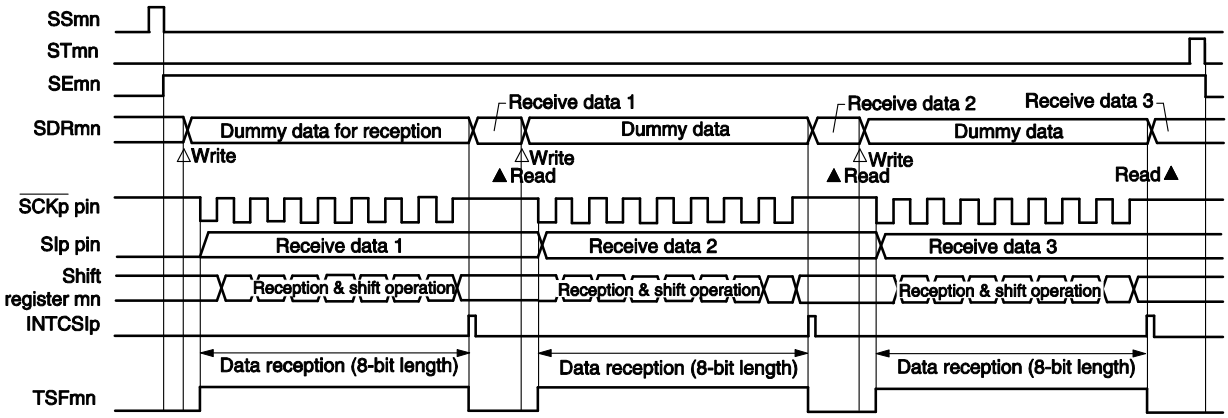

Remark m: Unit number (m = 0, 1), n: Channel number (n = 0, 1), p: CSI number (p = 00, 01, 10, 11), mn = 00, 01, 10, 11

Figure 15-87. Flowchart of Master Reception (in Single-Reception Mode)

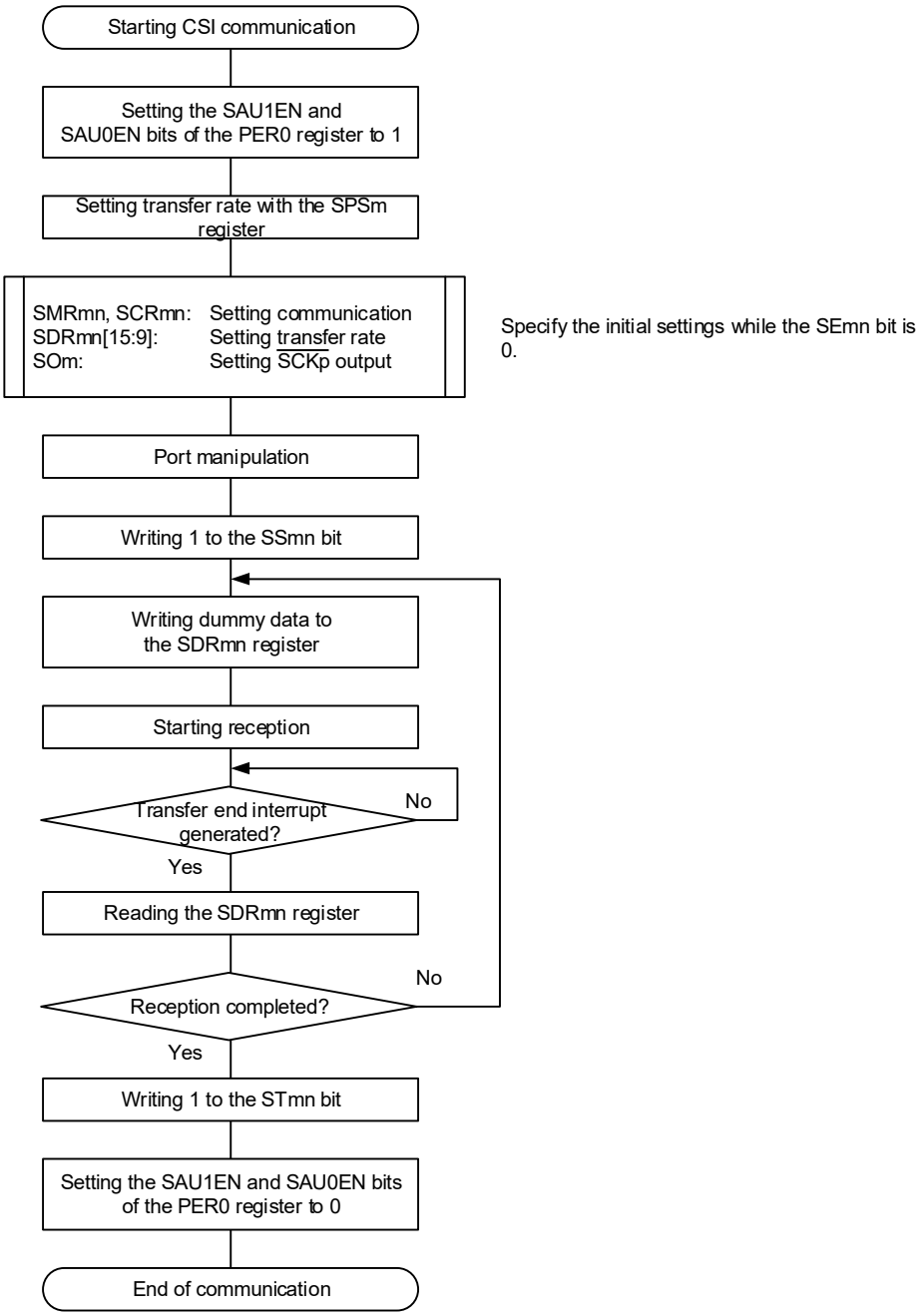

Remark m: Unit number (m = 0, 1), n: Channel number (n = 0, 1), mn = 00, 01, 10, 11

(4) Processing flow (in continuous reception mode)

Figure 15-88. Timing Chart of Master Reception (in Continuous Reception Mode) (Type 1: DAPmn = 0, CKPmn = 0)

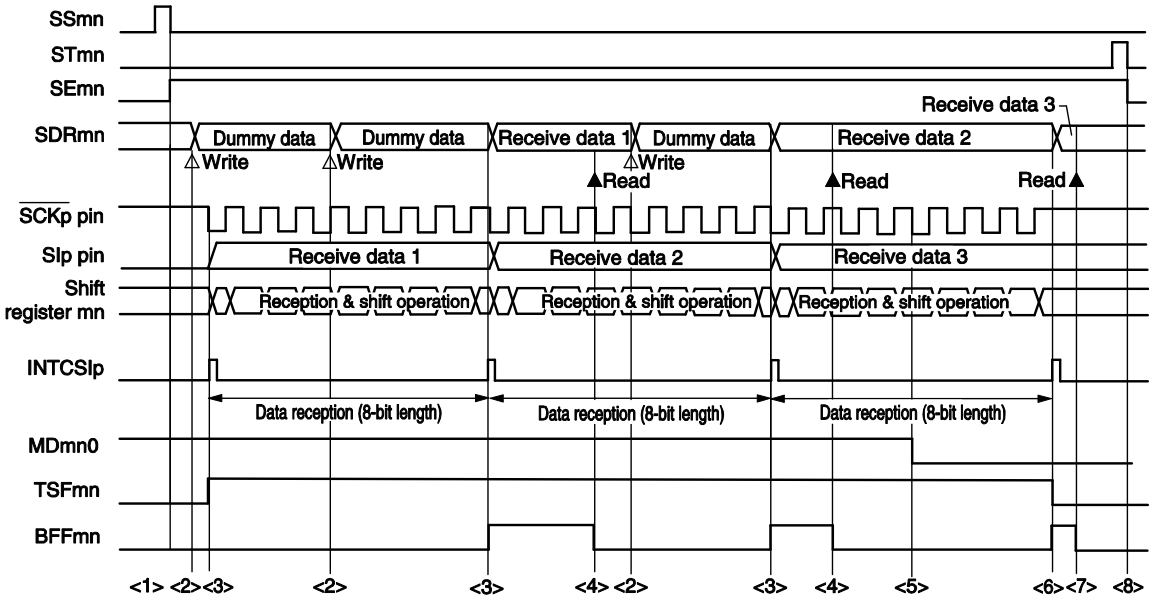

Caution The MDmn0 bit can be rewritten even during operation.
However, rewrite it before receive of the last bit is started, so that it has been rewritten before the transfer end interrupt of the last receive data.

Remarks 1. <1> to <8> in the figure correspond to <1> to <8> in **Figure 15-89 Flowchart of Master Reception (in Continuous Reception Mode)**.

2. m: Unit number (m = 0, 1), n: Channel number (n = 0, 1), p: CSI number (p = 00, 01, 10, 11), mn = 00, 01, 10, 11

Figure 15-89. Flowchart of Master Reception (in Continuous Reception Mode)

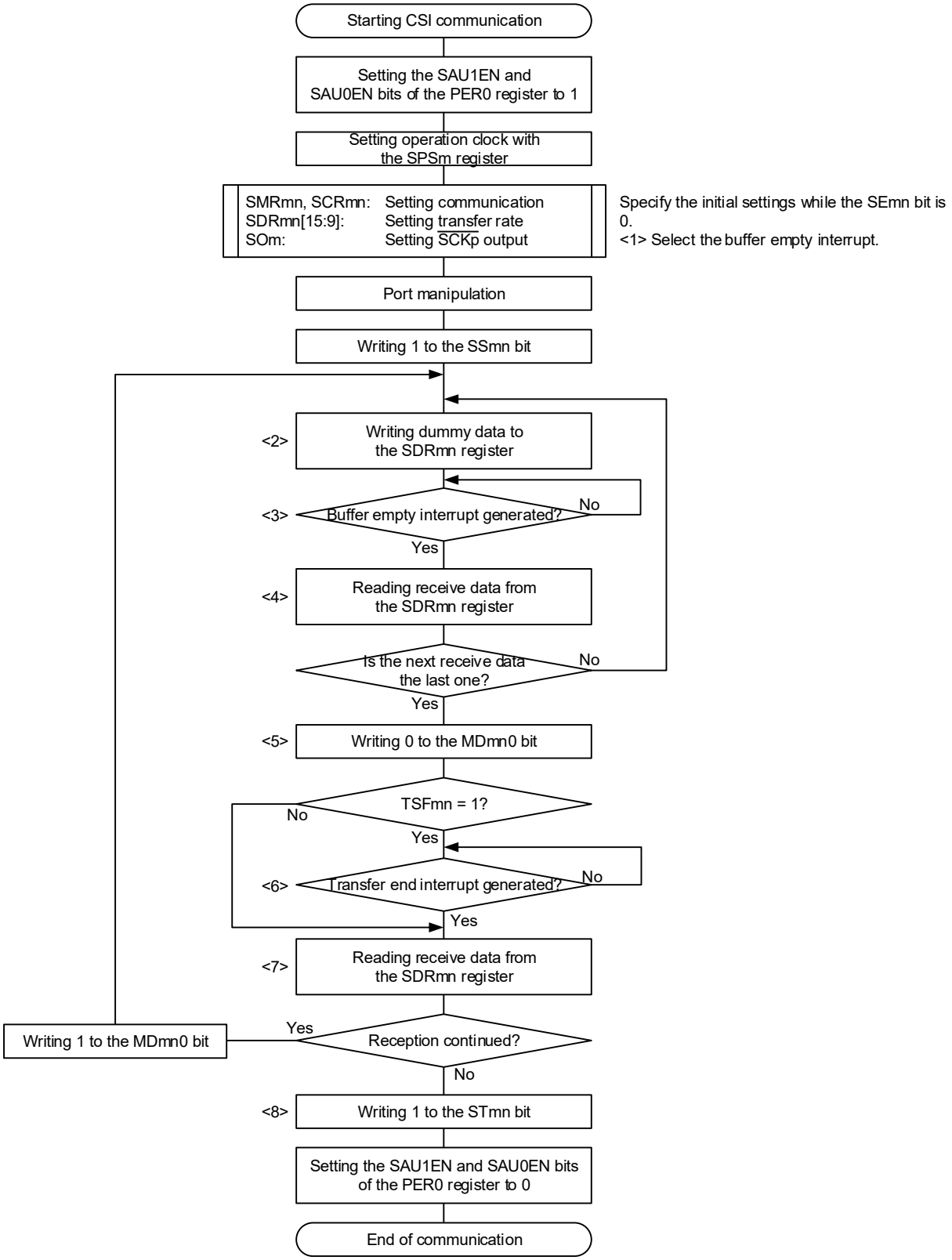

(**Remarks** are listed on the next page.)

Remarks 1. <1> to <8> in the figure correspond to <1> to <8> in Figure **15-88 Timing Chart of Master Reception (in Continuous Reception Mode)**.

2. m: Unit number (m = 0, 1), n: Channel number (n = 0, 1), p: CSI number (p = 00, 01, 10, 11), mn = 00, 01, 10, 11

15.6.3 Master transmission/reception

Master transmission/reception is an operation wherein this MCU outputs a transfer clock and transmits/receives data to/from other device.

SPI Function	CSI00	CSI01	CSI10	CSI11
Target channel	Channel 0 of SAU0	Channel 1 of SAU0	Channel 0 of SAU1	Channel 1 of SAU1
Pins used	$\overline{\text{SCK00}}$, SI00, SO00	$\overline{\text{SCK01}}$, SI01, SO01	$\overline{\text{SCK10}}$, SI10, SO10	$\overline{\text{SCK11}}$, SI11, SO11
Interrupt	INTCSI00	INTCSI01	INTCSI10	INTCSI11
	Transfer end interrupt (in single-transfer mode) or buffer empty interrupt (in continuous transfer mode) can be selected.			
Error detection flag	Overrun error detection flag (OVFmn) only			
Transfer data length	7 to 16 bits			
Transfer rate	Max. $f_{MCK}/4$ [Hz], Min. $f_{CLK}/(2 \times 2^{11} \times 128)$ [Hz] Note f_{CLK}: System clock frequency			
Data phase	Selectable by the DAPmn bit of the SCRmn register • DAPmn = 0: Data I/O starts at the start of the serial clock operation. • DAPmn = 1: Data I/O starts half a clock before the start of the serial clock operation.			
Clock phase	Selectable by the CKPmn bit of the SCRmn register • CKPmn = 0: Forward • CKPmn = 1: Reverse			
Data direction	MSB or LSB first			

Note Use this operation within a range that satisfies the conditions above and the AC characteristics in the electrical specifications.

Remark m: Unit number (m = 0, 1), n: Channel number (n = 0, 1), mn = 00, 01, 10, 11

(1) Register setting

Figure 15-90. Example of Contents of Registers for Master Transmission/Reception of SPI Function (CSI00, CSI01, CSI10, CSI11) (1/2)

(a) Serial mode register mn (SMRmn)

	15	14	13	12	11	10	9	8	7	6	5	4	3	2	1	0
SMRmn	CKSmn 0/1	CCSmn 0	0	0	0	0	0	STSmn 0	0	SISmn0 0	1	0	0	MDmn2 0	MDmn1 0	MDmn0 0/1

Operation clock (f_{MCK}) of channel n
0: Prescaler output clock CKm0 set by the SPSm register
1: Prescaler output clock CKm1 set by the SPSm register

Interrupt source of channel n
0: Transfer end interrupt
1: Buffer empty interrupt

(b) Serial communication operation setting register mn (SCRmn)

	15	14	13	12	11	10	9	8	7	6	5	4	3	2	1	0
SCRmn	TXEmn 1	RXEmn 1	DAPmn 0/1	CKPmn 0/1	0	0	PTCmn1 0	PTCmn0 0	DIRmn 0/1	0	SLCmn1 0	SLCmn0 0	DLSmn3 0/1	DLSmn2 0/1	DLSmn1 0/1	DLSmn0 0/1

Selection of the data and clock phase (For details about the setting, see **15.3 Registers Controlling Serial Array Unit**.)

Selection of data transfer sequence
0: Inputs/outputs data with MSB first
1: Inputs/outputs data with LSB first.

Setting of data length

(c) Serial data register mn (SDRmn)

(1) When operation is stopped (SEmn = 0)

	15	14	13	12	11	10	9	8	7	6	5	4	3	2	1	0
SDRmn	Baud rate setting							0	0	0	0	0	0	0	0	0

(2) When operation is in progress (SEmn = 1) (Lower 8 bits: SDRpL)

	15	14	13	12	11	10	9	8	7	6	5	4	3	2	1	0
SDRmn	Transmit data setting/Receive data setting															

SDRpL

Remarks 1. m: Unit number (m = 0, 1), n: Channel number (n = 0, 1), p: CSI number (p = 00, 01, 10, 11), mn = 00, 01, 10, 11

2. □: Setting is fixed in the CSI master transmission/reception mode

■ : Setting disabled (set to the initial value)

0/1: Set to 0 or 1 depending on the usage of the user

Figure 15-90. Example of Contents of Registers for Master Transmission/Reception of SPI Function (CSI00, CSI01, CSI10, CSI11) (2/2)

(d) Serial output register m (SOm) … Sets only the bits of the target channel.

	15	14	13	12	11	10	9	8	7	6	5	4	3	2	1	0
SOm	0	0	0	0	0	0	CKOm1 0/1	CKOm0 0/1	0	0	0	0	0	0	SOm1 0/1	SOm0 0/1

Communication starts when these bits are 1 if the clock phase is forward (the CKPmn bit of the SCRmn = 0). If the clock phase is reversed (CKPmn = 1), communication starts when these bits are 0.

(e) Serial output enable register m (SOEm) … Sets only the bits of the target channel to 1.

	15	14	13	12	11	10	9	8	7	6	5	4	3	2	1	0
SOEm	0	0	0	0	0	0	0	0	0	0	0	0	0	0	SOEm1 0/1	SOEm0 0/1

(f) Serial channel start register m (SSm) … Sets only the bits of the target channel to 1.

	15	14	13	12	11	10	9	8	7	6	5	4	3	2	1	0
SSm	0	0	0	0	0	0	0	0	0	0	0	0	0	0	SSm1 0/1	SSm0 0/1

Remarks 1. m: Unit number (m = 0, 1), n: Channel number (n = 0, 1), p: CSI number (p = 00, 01, 10, 11), mn = 00, 01, 10, 11

2. ☐: Setting is fixed in the CSI master transmission/reception mode

▒ : Setting disabled (set to the initial value)

0/1: Set to 0 or 1 depending on the usage of the user

(2) Operation procedure

Figure 15-91. Initial Setting Procedure for Master Transmission/Reception

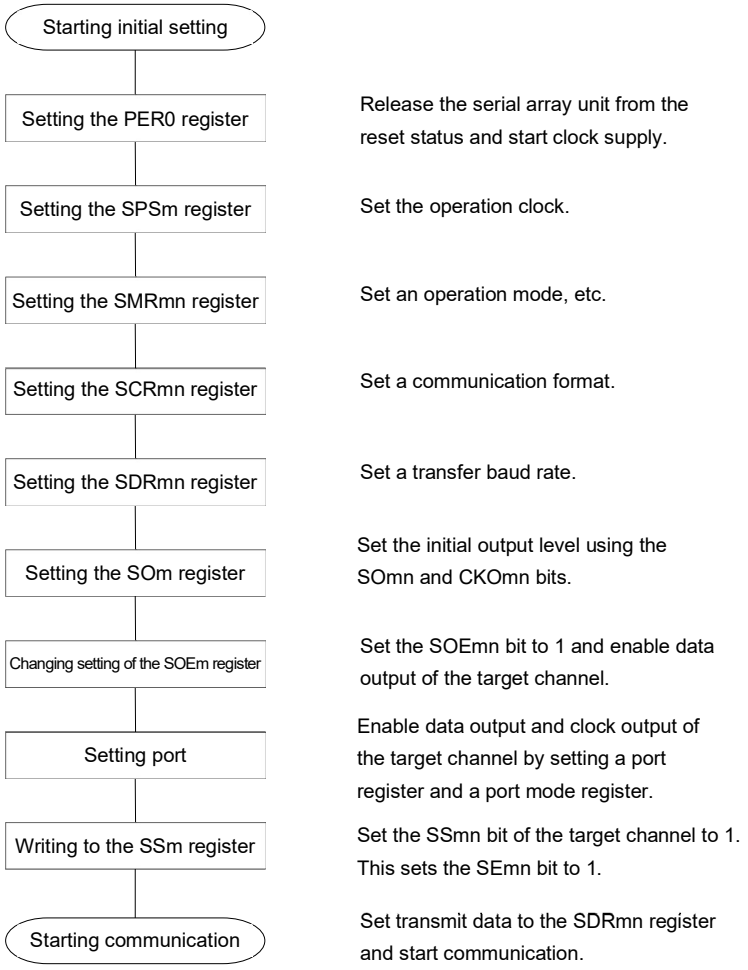

Remark m: Unit number (m = 0, 1), n: Channel number (n = 0, 1), p: CSI number (p = 00, 01, 10, 11), mn = 00, 01, 10, 11

Figure 15-92. Procedure for Stopping Master Transmission/Reception

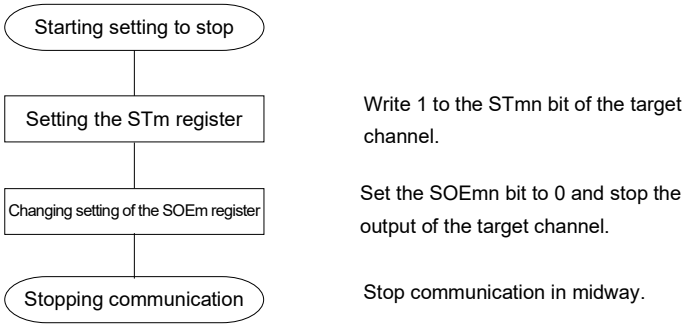

Remarks 1. Even after communication is stopped, the pin level is retained. To resume the operation, re-set serial output register m (SOm) (see **Figure 15-93 Procedure for Resuming Master Transmission/ Reception**).

2. m: Unit number (m = 0, 1), n: Channel number (n = 0, 1), p: CSI number (p = 00, 01, 10, 11), mn = 00, 01, 10, 11

Figure 15-93. Procedure for Resuming Master Transmission/Reception

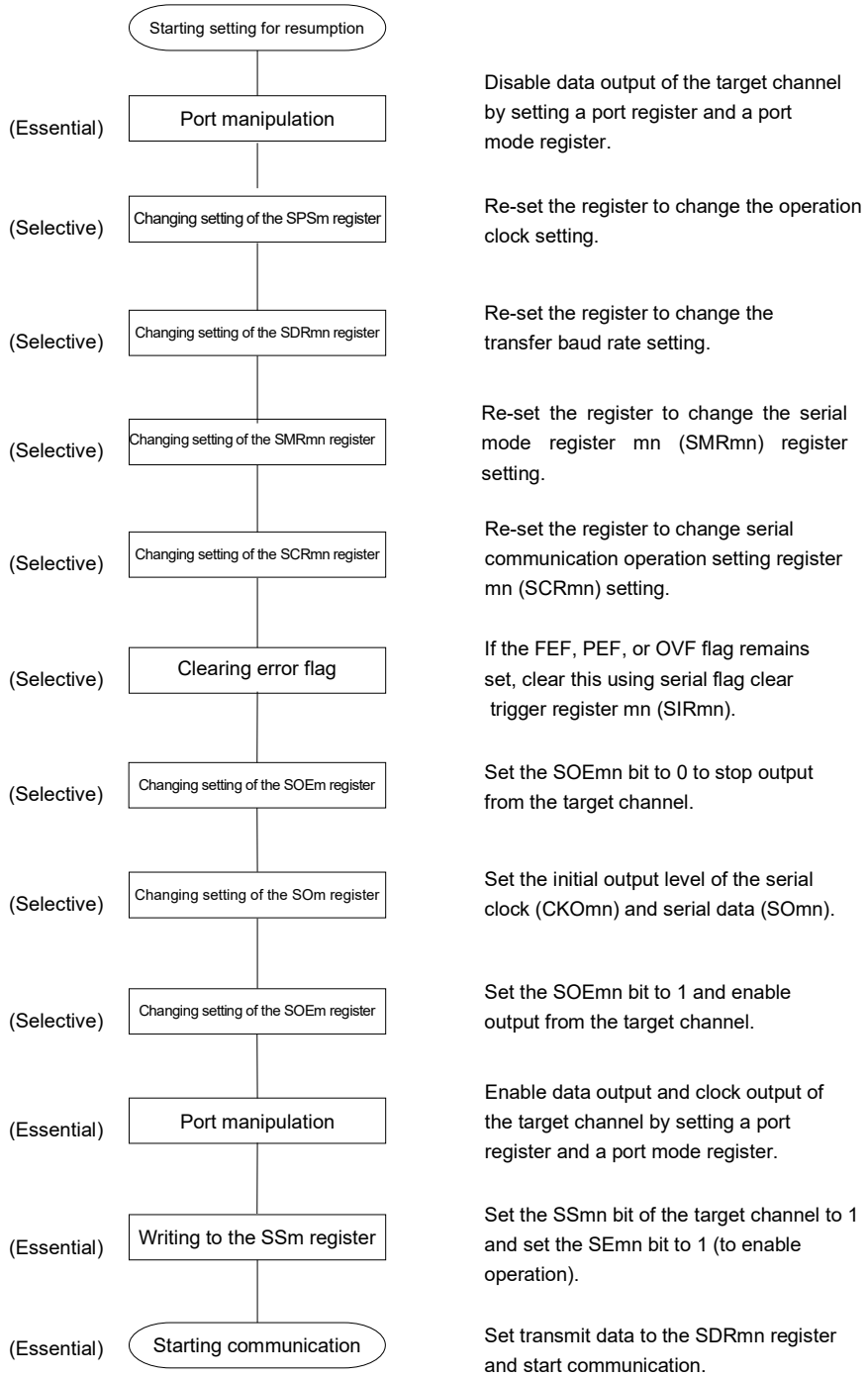

Remark m: Unit number (m = 0, 1), n: Channel number (n = 0, 1), mn = 00, 01, 10, 11

(3) Processing flow (in single-transmission/reception mode)

Figure 15-94. Timing Chart of Master Transmission/Reception (in Single-Transmission/Reception Mode)
(Type 1: DAPmn = 0, CKPmn = 0)

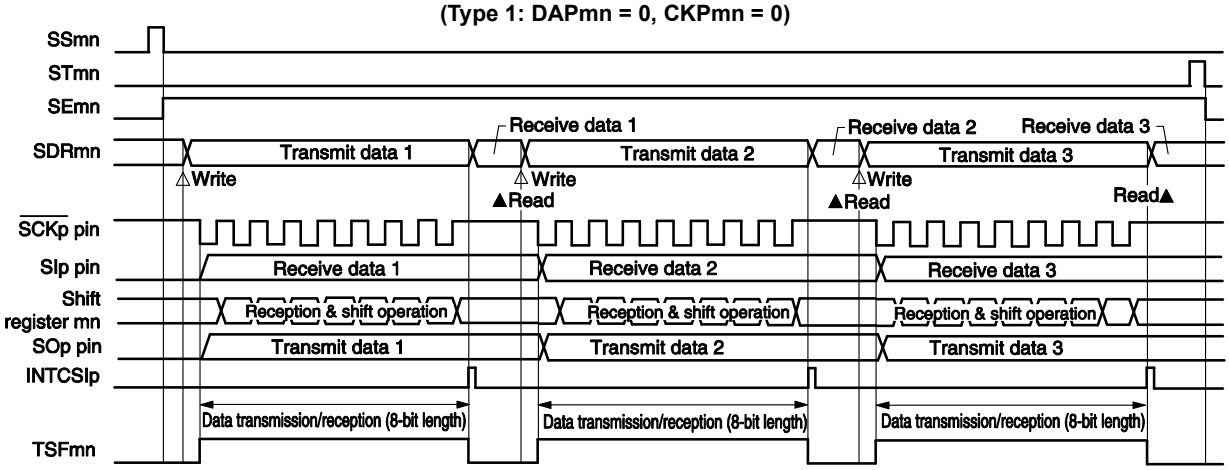

Remark m: Unit number (m = 0, 1), n: Channel number (n = 0, 1), p: CSI number (p = 00, 01, 10, 11), mn = 00, 01, 10, 11

Figure 15-95. Flowchart of Master Transmission/Reception (in Single- Transmission/Reception Mode)

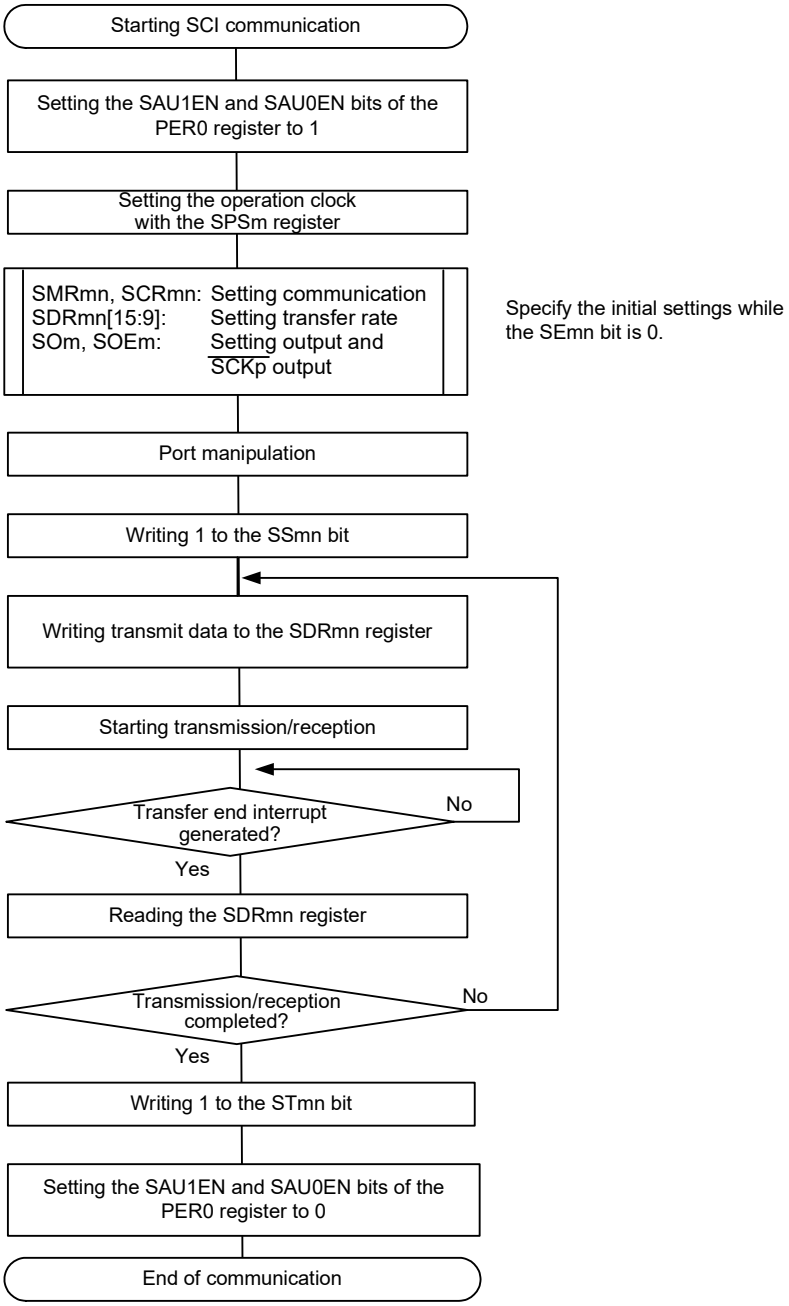

Remark m: Unit number (m = 0, 1), n: Channel number (n = 0, 1), p: CSI number (p = 00, 01, 10, 11), mn = 00, 01, 10, 11

(4) Processing flow (in continuous transmission/reception mode)

Figure 15-96. Timing Chart of Master Transmission/Reception (in Continuous Transmission/Reception Mode) (Type 1: DAPmn = 0, CKPmn = 0)

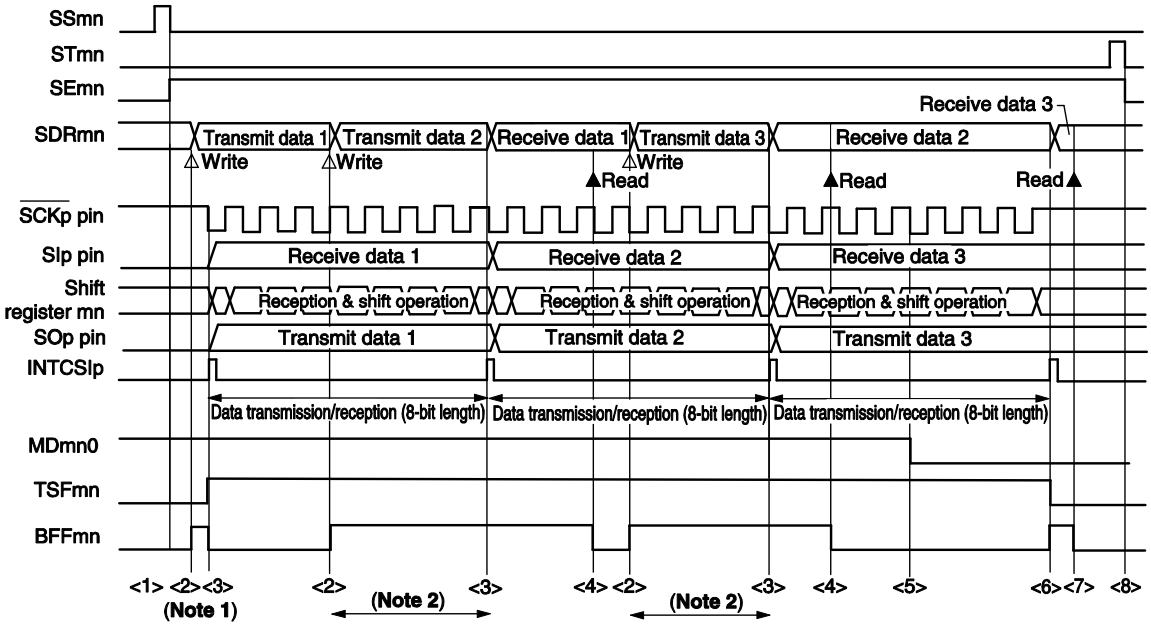

Notes 1. If transmit data is written to the SDRmn register while the BFFmn bit of serial status register mn (SSRmn) is 1 (valid data is stored in serial data register mn (SDRmn)), the transmit data is overwritten.

2. The transmit data can be read by reading the SDRmn register during this period. At this time, the transfer operation is not affected.

Caution The MDmn0 bit of serial mode register mn (SMRmn) can be rewritten even during operation. However, rewrite it before transfer of the last bit is started, so that it has been rewritten before the transfer end interrupt of the last transmit data.

Remarks 1. <1> to <8> in the figure correspond to <1> to <8> in **Figure 15-97 Flowchart of Master Transmission/Reception (in Continuous Transmission/Reception Mode)**.

2. m: Unit number (m = 0, 1), n: Channel number (n = 0, 1), p: CSI number (p = 00, 01, 10, 11), mn = 00, 01, 10, 11

Figure 15-97. Flowchart of Master Transmission/Reception (in Continuous Transmission/Reception Mode)

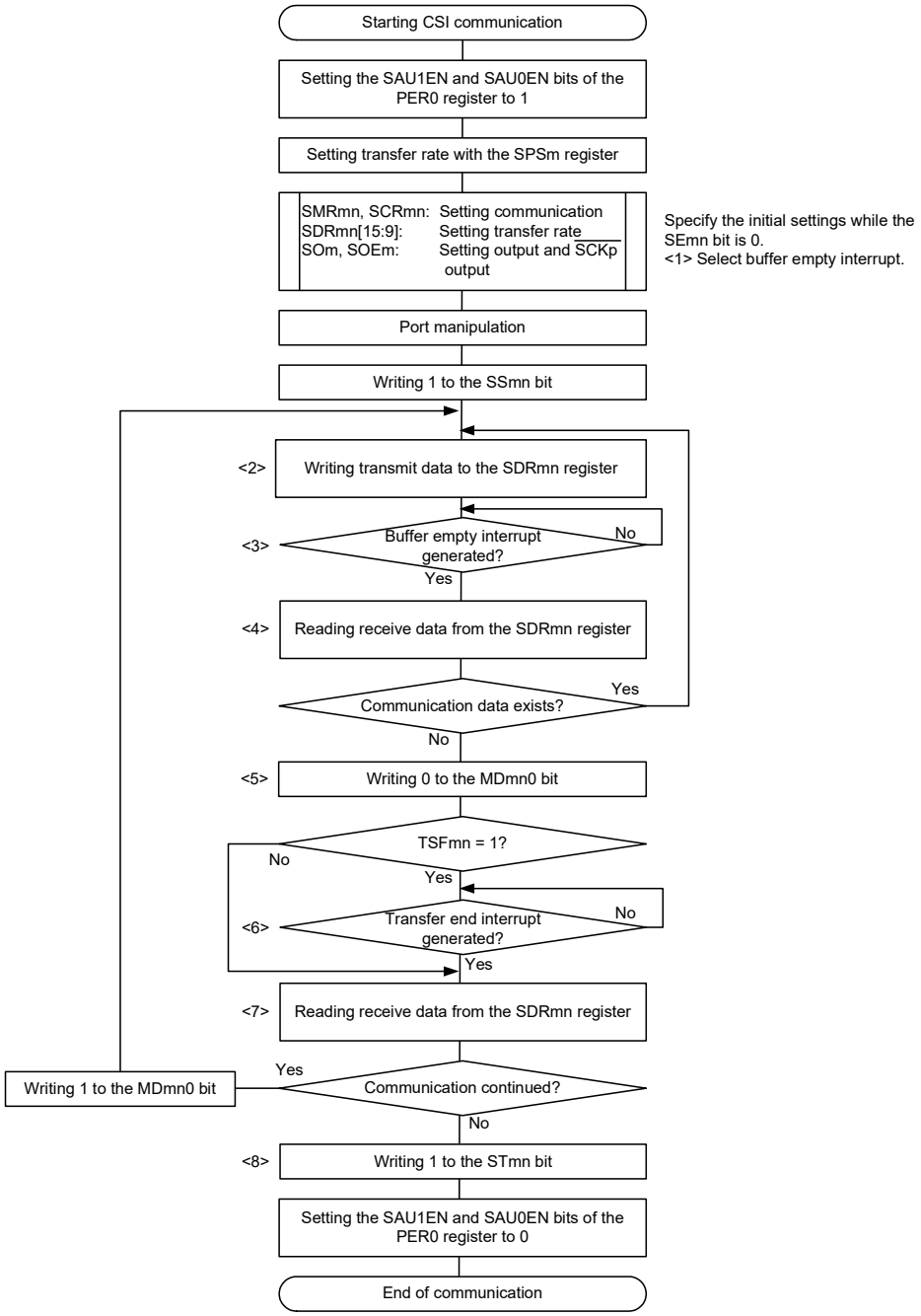

Remarks 1. <1> to <8> in the figure correspond to <1> to <8> in **Figure 15-96 Timing Chart of Master Transmission/Reception (in Continuous Transmission/Reception Mode)**.

2. m: Unit number (m = 0, 1), n: Channel number (n = 0, 1), p: CSI number (p = 00, 01, 10, 11), mn = 00, 01, 10, 11

15.6.4 Slave transmission

Slave transmission is an operation wherein this MCU transmits data to another device in the state of a transfer clock being input from another device.

SPI Function	CSI00	CSI01	CSI10	CSI11
Target channel	Channel 0 of SAU0	Channel 1 of SAU0	Channel 0 of SAU1	Channel 1 of SAU1
Pins used	$\overline{\text{SCK00}}$, SO00, $\overline{\text{SSI00}}$	$\overline{\text{SCK01}}$, SO01, $\overline{\text{SSI01}}$	$\overline{\text{SCK10}}$, SO10, $\overline{\text{SSI10}}$	$\overline{\text{SCK11}}$, SO11, $\overline{\text{SSI11}}$
Interrupt	INTCSI00	INTCSI01	INTCSI10	INTCSI11
	Transfer end interrupt (in single-transfer mode) or buffer empty interrupt (in continuous transfer mode) can be selected.			
Error detection flag	Overrun error detection flag (OVFmn) only			
Transfer data length	7 to 16 bits			
Transfer rate	Max. f_{MCK}/6 [Hz][Notes 1, 2].			
Data phase	Selectable by the DAPmn bit of the SCRmn register • DAPmn = 0: Data output starts from the start of the serial clock operation. • DAPmn = 1: Data output starts half a clock before the start of the serial clock operation.			
Clock phase	Selectable by the CKPmn bit of the SCRmn register • CKPmn = 0: Forward • CKPmn = 1: Reverse			
Data direction	MSB or LSB first			
SPI function	The operation of the slave select function can be selected.			

Notes 1. Because the external serial clock input to the $\overline{\text{SCK00}}$, $\overline{\text{SCK01}}$, $\overline{\text{SCK10}}$, and $\overline{\text{SCK11}}$ pins is sampled internally and used, the fastest transfer rate is f_{MCK}/6 [Hz].

2. Use this operation within a range that satisfies the conditions above and the AC characteristics in the electrical specifications.

Remarks 1. f_{MCK}: Operation clock frequency of target channel

2. m: Unit number (m = 0, 1), n: Channel number (n = 0, 1), mn = 00, 01, 10, 11

(1) Register setting

Figure 15-98. Example of Contents of Registers for Slave Transmission of SPI Function (CSI00, CSI01, CSI10, CSI11) (1/2)

(a) Serial mode register mn (SMRmn)

	15	14	13	12	11	10	9	8	7	6	5	4	3	2	1	0
SMRmn	CKSmn	CCSmn						STSmn		SISmn0				MDmn2	MDmn1	MDmn0
	0/1	1	0	0	0	0	0	0	0	0	1	0	0	0	0	0/1

Operation clock (f_{MCK}) of channel n
0: Prescaler output clock CKm0 set by the SPSm register
1: Prescaler output clock CKm1 set by the SPSm register

Interrupt source of channel n
0: Transfer end interrupt
1: Buffer empty interrupt

(b) Serial communication operation setting register mn (SCRmn)

	15	14	13	12	11	10	9	8	7	6	5	4	3	2	1	0
SCRmn	TXEmn	RXEmn	DAPmn	CKPmn			PTCmn1	PTCmn0	DIRmn		SLCmn1	SLCmn0	DLSmn3	DLSmn2	DLSmn1	DLSmn0
	1	0	0/1	0/1	0	0	0	0	0/1	0	0	0	0/1	0/1	0/1	0/1

Selection of the data and clock phase (For details about the setting, see **15.3 Registers Controlling Serial Array Unit**.)

Selection of data transfer sequence
0: Inputs/outputs data with MSB first
1: Inputs/outputs data with LSB first.

Setting of data length

(c) Serial data register mn (SDRmn)

(1) When operation is stopped (SEmn = 0)

	15	14	13	12	11	10	9	8	7	6	5	4	3	2	1	0
SDRmn	0000000 (baud rate setting)							0	0	0	0	0	0	0	0	0

(2) When operation is in progress (SEmn = 1) (Lower 8 bits: SDRpL)

	15	14	13	12	11	10	9	8	7	6	5	4	3	2	1	0
SDRmn	Transmit data setting															

SDRpL

Remarks 1. m: Unit number (m = 0, 1), n: Channel number (n = 0, 1), p: CSI number (p = 00, 01, 10, 11), mn = 00, 01, 10, 11

2. ☐ : Setting is fixed in the CSI slave transmission mode

▒ : Setting disabled (set to the initial value)

× : Bit that cannot be used in this mode (set to the initial value when not used in any mode)

0/1 : Set to 0 or 1 depending on the usage of the user

Figure 15-98. Example of Contents of Registers for Slave Transmission of SPI Function (CSI00, CSI01, CSI10, CSI11) (2/2)

(d) Serial slave select enable register m (SSEm) … Controls the $\overline{\text{SSI00}}$, $\overline{\text{SSI01}}$, $\overline{\text{SSI10}}$, and $\overline{\text{SSI11}}$ pin inputs of the target channel in slave mode.

	15	14	13	12	11	10	9	8	7	6	5	4	3	2	1	0
SSEm	0	0	0	0	0	0	0	0	0	0	0	0	0	0	SSEm1 0/1	SSEm0 0/1

(e) Serial output register m (SOm) … Sets only the bits of the target channel.

	15	14	13	12	11	10	9	8	7	6	5	4	3	2	1	0
SOm	0	0	0	0	0	0	CKOm1 ×	CKOm0 ×	0	0	0	0	0	0	SOm1 0/1	SOm0 0/1

(f) Serial output enable register m (SOEm) … Sets only the bits of the target channel to 1.

	15	14	13	12	11	10	9	8	7	6	5	4	3	2	1	0
SOEm	0	0	0	0	0	0	0	0	0	0	0	0	0	0	SOEm1 0/1	SOEm0 0/1

(g) Serial channel start register m (SSm) … Sets only the bits of the target channel to 1.

	15	14	13	12	11	10	9	8	7	6	5	4	3	2	1	0
SSm	0	0	0	0	0	0	0	0	0	0	0	0	0	0	SSm1 0/1	SSm0 0/1

Remarks 1. m: Unit number (m = 0, 1), n: Channel number (n = 0, 1), p: CSI number (p = 00, 01, 10, 11), mn = 00, 01, 10, 11

2. ☐ : Setting is fixed in the CSI slave transmission mode

▒ : Setting disabled (set to the initial value)

× : Bit that cannot be used in this mode (set to the initial value when not used in any mode)

0/1 : Set to 0 or 1 depending on the usage of the user

(2) Operation procedure

Figure 15-99. Initial Setting Procedure for Slave Transmission

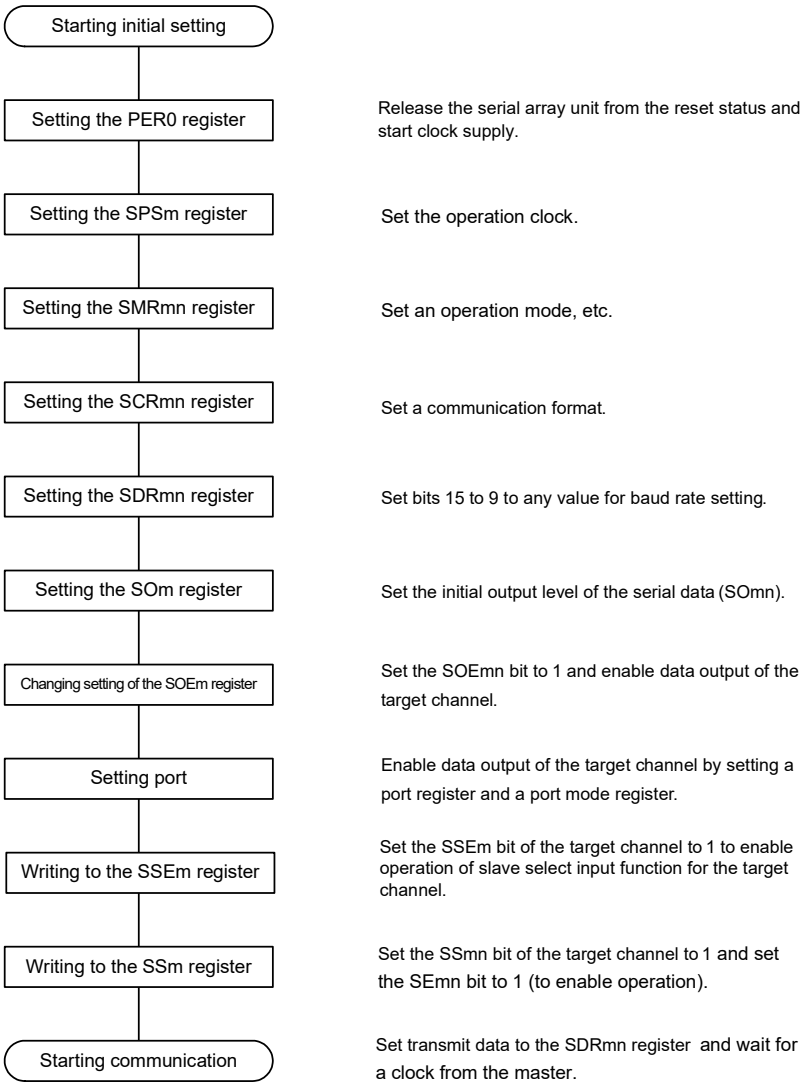

Remark m: Unit number (m = 0, 1), n: Channel number (n = 0, 1), p: CSI number (p = 00, 01, 10, 11), mn = 00, 01, 10, 11

Figure 15-100. Procedure for Stopping Slave Transmission

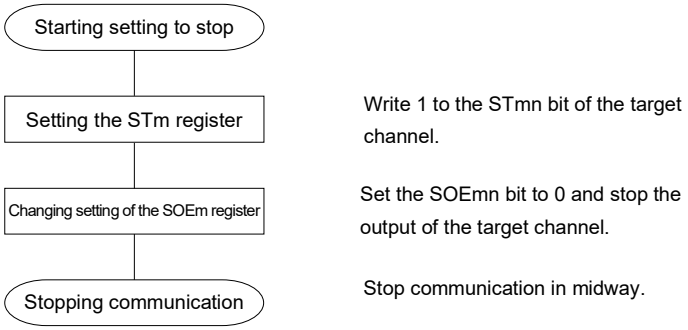

Remarks 1. Even after communication is stopped, the pin level is retained. To resume the operation, re-set serial output register m (SOm) (see **Figure 15-101 Procedure for Resuming Slave Transmission**).

2. m: Unit number (m = 0, 1), n: Channel number (n = 0, 1), p: CSI number (p = 00, 01, 10, 11), mn = 00, 01, 10, 11

Figure 15-101. Procedure for Resuming Slave Transmission

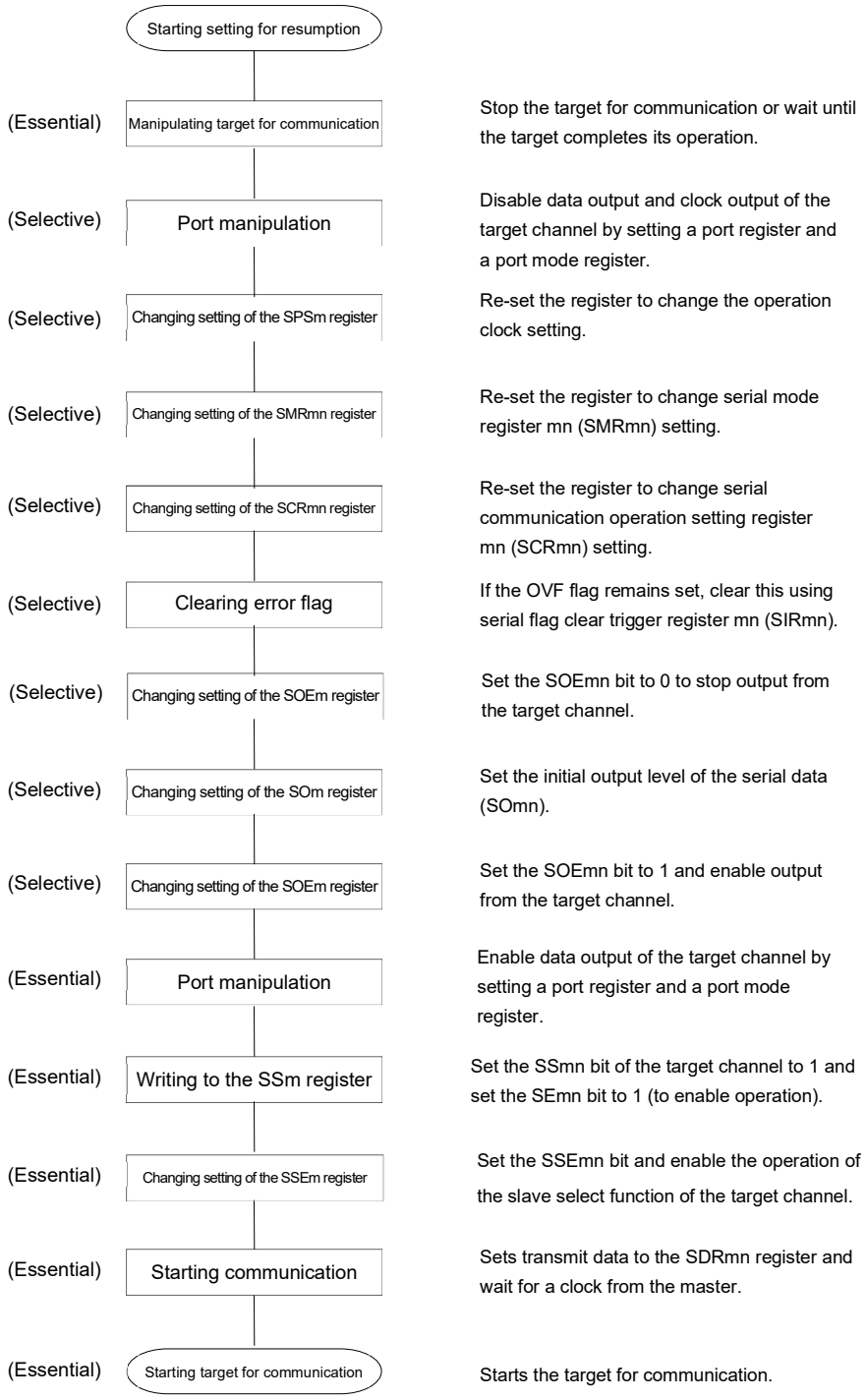

Remark m: Unit number (m = 0, 1), n: Channel number (n = 0, 1), mn = 00, 01, 10, 11

(3) Processing flow (in single-transmission mode)

Figure 15-102. Timing Chart of Slave Transmission (in Single-Transmission Mode)
(Type 1: DAPmn = 0, CKPmn = 0)

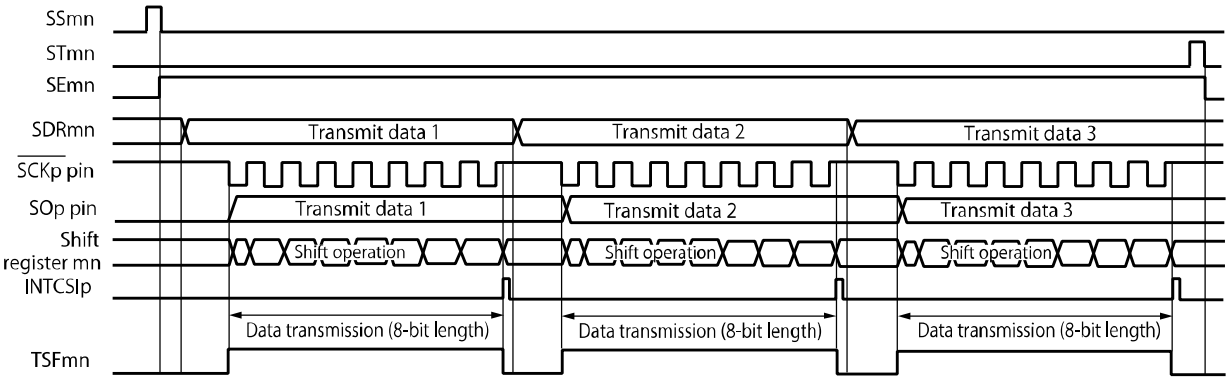

<R>

Remark m: Unit number (m = 0, 1), n: Channel number (n = 0, 1), p: CSI number (p = 00, 01, 10, 11), mn = 00, 01, 10, 11

Figure 15-103. Flowchart of Slave Transmission (in Single-Transmission Mode)

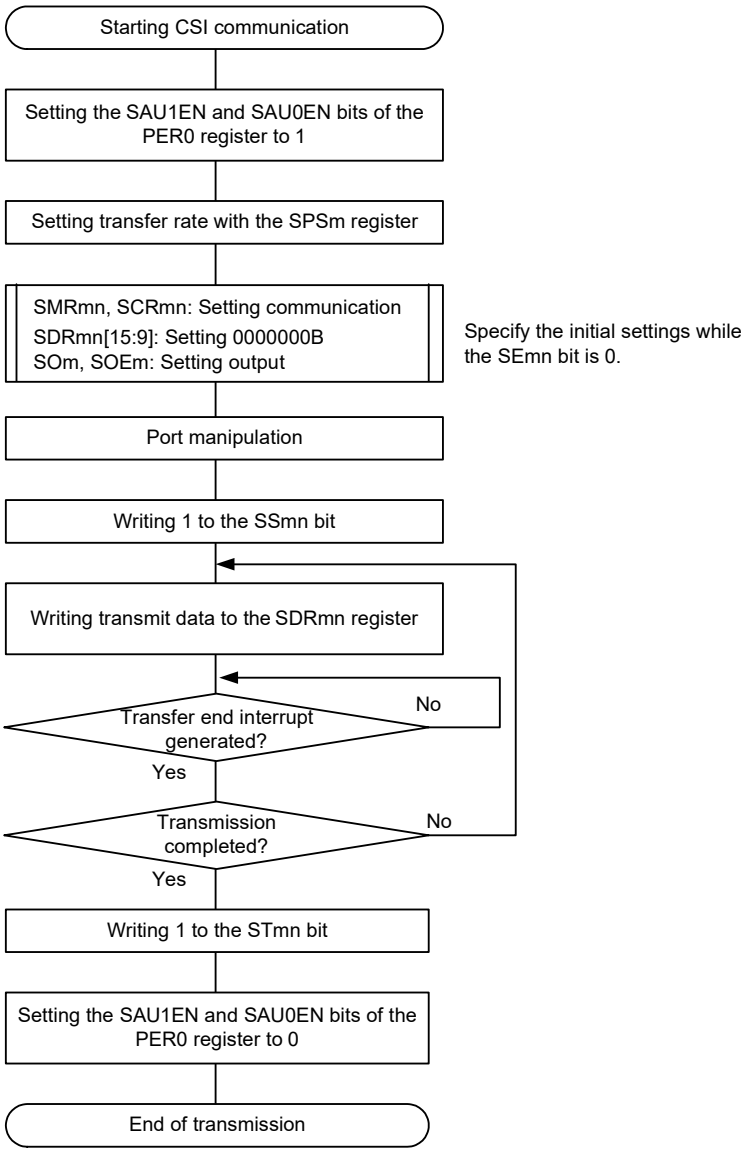

Remark m: Unit number (m = 0, 1), n: Channel number (n = 0, 1), mn = 00, 01, 10, 11

(4) Processing flow (in continuous transmission mode)

Figure 15-104. Timing Chart of Slave Transmission (in Continuous Transmission Mode)
(Type 1: DAPmn = 0, CKPmn = 0)

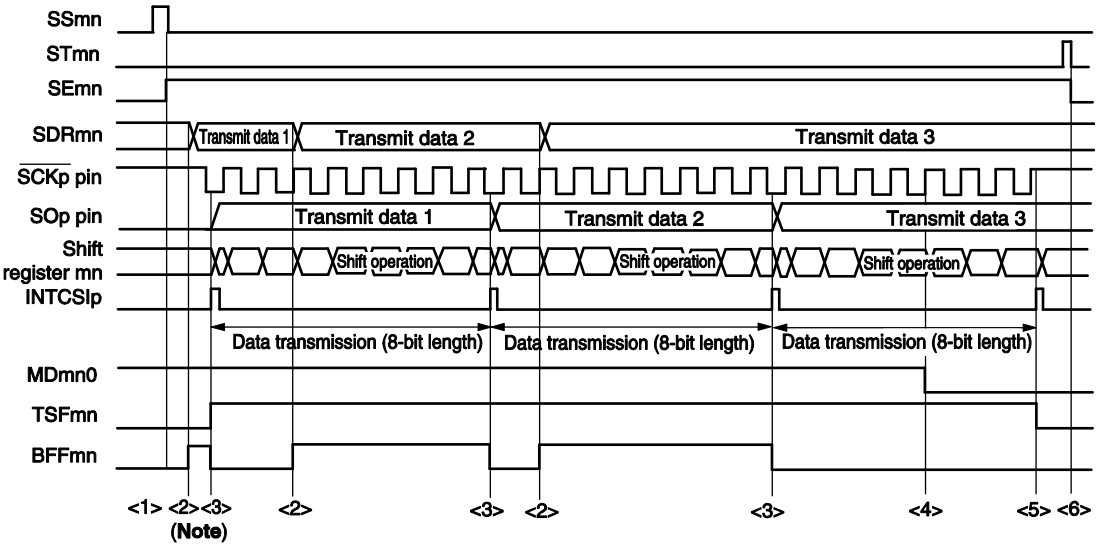

Note If transmit data is written to the SDRmn register while the BFFmn bit of serial status register mn (SSRmn) is 1 (valid data is stored in serial data register mn (SDRmn)), the transmit data is overwritten.

Caution **The MDmn0 bit of serial mode register mn (SMRmn) can be rewritten even during operation. However, rewrite it before transfer of the last bit is started.**

Remark m: Unit number (m = 0, 1), n: Channel number (n = 0, 1), p: CSI number (p = 00, 01, 10, 11), mn = 00, 01, 10, 11

Figure 15-105. Flowchart of Slave Transmission (in Continuous Transmission Mode)

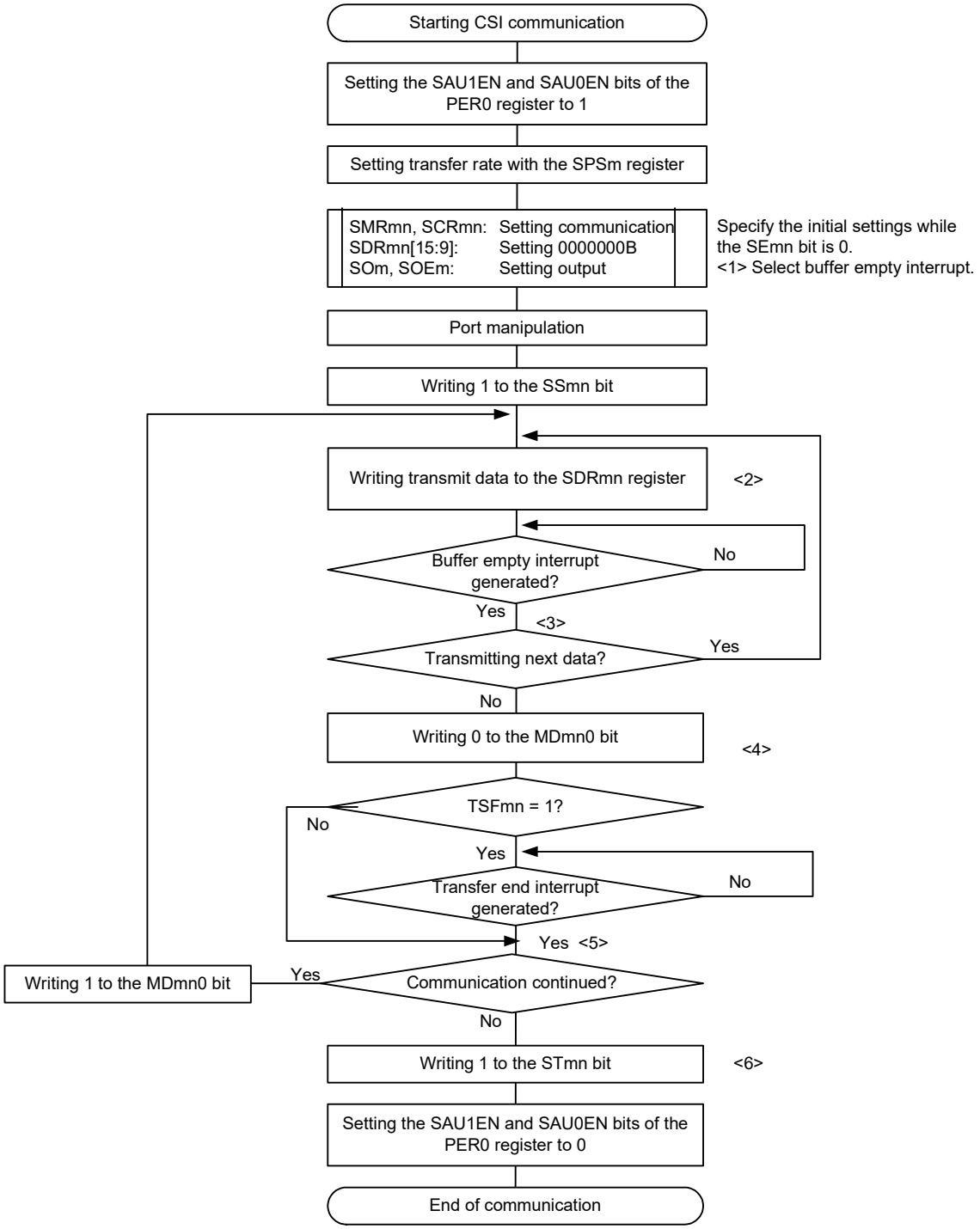

Remarks 1. <1> to <6> in the figure correspond to <1> to <6> in **Figure 15-104 Timing Chart of Slave Transmission (in Continuous Transmission Mode)**.

2. m: Unit number (m = 0, 1), n: Channel number (n = 0, 1), p: CSI number (p = 00, 01, 10, 11), mn = 00, 01, 10, 11

15.6.5 Slave reception

Slave reception is an operation wherein this MCU receives data from another device in the state of a transfer clock being input from another device.

<R>

SPI Function	CSI00	CSI01	CSI10	CSI11
Target channel	Channel 0 of SAU0	Channel 1 of SAU0	Channel 0 of SAU1	Channel 1 of SAU1
Pins used	$\overline{\text{SCK00}}$, SI00, $\overline{\text{SII00}}$	$\overline{\text{SCK01}}$, SI01, $\overline{\text{SII01}}$	$\overline{\text{SCK10}}$, SI10, $\overline{\text{SII10}}$	$\overline{\text{SCK11}}$, SI11, $\overline{\text{SII11}}$
Interrupt	INTCSI00	INTCSI01	INTCSI10	INTCSI11
	Transfer end interrupt only (Setting the buffer empty interrupt is prohibited.)			
Error detection flag	Overrun error detection flag (OVFmn) only			
Transfer data length	7 to 16 bits			
Transfer rate	Max. f_{MCK}/6 [Hz] Notes 1, 2			
Data phase	Selectable by the DAPmn bit of the SCRmn register • DAPmn = 0: Data input starts from the start of the serial clock operation. • DAPmn = 1: Data input starts half a clock before the start of the serial clock operation.			
Clock phase	Selectable by the CKPmn bit of the SCRmn register • CKPmn = 0: Forward • CKPmn = 1: Reverse			
Data direction	MSB or LSB first			
SPI function	The operation of the slave select function can be selected.			

Notes 1. Because the external serial clock input to the $\overline{\text{SCK00}}$, $\overline{\text{SCK01}}$, $\overline{\text{SCK10}}$, and $\overline{\text{SCK11}}$ pins is sampled internally and used, the fastest transfer rate is f_{MCK}/6 [Hz].

2. Use this operation within a range that satisfies the conditions above and the AC characteristics in the electrical specifications.

Remarks 1. f_{MCK}: Operation clock frequency of target channel

2. m: Unit number (m = 0, 1), n: Channel number (n = 0, 1), mn = 00, 01, 10, 11

(1) Register setting

Figure 15-106. Example of Contents of Registers for Slave Reception of SPI Function (CSI00, CSI01, CSI10, CSI11) (1/2)

(a) Serial mode register mn (SMRmn)

	15	14	13	12	11	10	9	8	7	6	5	4	3	2	1	0
SMRmn	CKSmn 0/1	CCSmn 1	0	0	0	0	0	STSmn 0	0	SISmn0 0	1	0	0	MDmn2 0	MDmn1 0	MDmn0 0

Operation clock (f_{MCK}) of channel n
0: Prescaler output clock CKm0 set by the SPSm register
1: Prescaler output clock CKm1 set by the SPSm register

Interrupt source of channel n
0: Transfer end interrupt

(b) Serial communication operation setting register mn (SCRmn)

	15	14	13	12	11	10	9	8	7	6	5	4	3	2	1	0
SCRmn	TXEmn 0	RXEmn 1	DAPmn 0/1	CKPmn 0/1	0	0	PTCmn1 0	PTCmn0 0	DIRmn 0/1	0	SLCmn1 0	SLCmn0 0	DLSmn3 0/1	DLSmn2 0/1	DLSmn1 0/1	DLSmn0 0/1

Selection of the data and clock phase (For details about the setting, see **15.3 Registers Controlling Serial Array Unit**.)

Selection of data transfer sequence
0: Inputs/outputs data with MSB first
1: Inputs/outputs data with LSB first.

Setting of data length

(c) Serial data register mn (SDRmn)

(1) When operation is stopped (SEmn = 0)

	15	14	13	12	11	10	9	8	7	6	5	4	3	2	1	0
SDRmn	0000000 (baud rate setting)							0	0	0	0	0	0	0	0	0

(2) When operation is in progress (SEmn = 1) (Lower 8 bits: SDRpL)

	15	14	13	12	11	10	9	8	7	6	5	4	3	2	1	0
SDRmn	Receive data setting															

SDRpL

(d) Serial output register m (SOm) …The register that not used in this mode.

	15	14	13	12	11	10	9	8	7	6	5	4	3	2	1	0
SOm	0	0	0	0	0	0	CKOm1 ×	CKOm0 ×	0	0	0	0	0	0	SOm1 ×	SOm0 ×

Remarks 1. m: Unit number (m = 0, 1), n: Channel number (n = 0, 1), p: CSI number (p = 00, 01, 10, 11), mn = 00, 01, 10, 11

2. ☐ : Setting is fixed in the CSI slave reception mode, ▒ : Setting disabled (set to the initial value)
×: Bit that cannot be used in this mode (set to the initial value when not used in any mode)
0/1: Set to 0 or 1 depending on the usage of the user

Figure 15-106. Example of Contents of Registers for Slave Reception of SPI Function (CSI00, CSI01, CSI10, CSI11) (2/2)

(e) Serial output enable register m (SOEm) …The register that not used in this mode.

	15	14	13	12	11	10	9	8	7	6	5	4	3	2	1	0
SOEm	0	0	0	0	0	0	0	0	0	0	0	0	0	0	SOEm1 ×	SOEm0 ×

(f) Serial channel start register m (SSm) … Sets only the bits of the target channel to 1.

	15	14	13	12	11	10	9	8	7	6	5	4	3	2	1	0
SSm	0	0	0	0	0	0	0	0	0	0	0	0	0	0	SSm1 0/1	SSm0 0/1

(g) Serial slave select enable register m (SSEm) … Controls the $\overline{\text{SSI00}}$, $\overline{\text{SSI01}}$, $\overline{\text{SSI10}}$, and $\overline{\text{SSI11}}$ pin inputs of the target channel in slave mode.

<R>

	15	14	13	12	11	10	9	8	7	6	5	4	3	2	1	0
SSEm	0	0	0	0	0	0	0	0	0	0	0	0	0	0	SSEm1 0/1	SSEm0 0/1

Remarks 1. m: Unit number (m = 0, 1), n: Channel number (n = 0, 1), p: CSI number (p = 00, 01, 10, 11), mn = 00, 01, 10, 11

2. ☐ : Setting is fixed in the CSI slave reception mode, ▒ : Setting disabled (set to the initial value)
×: Bit that cannot be used in this mode (set to the initial value when not used in any mode)
0/1: Set to 0 or 1 depending on the usage of the user

(2) Operation procedure

Figure 15-107. Initial Setting Procedure for Slave Reception

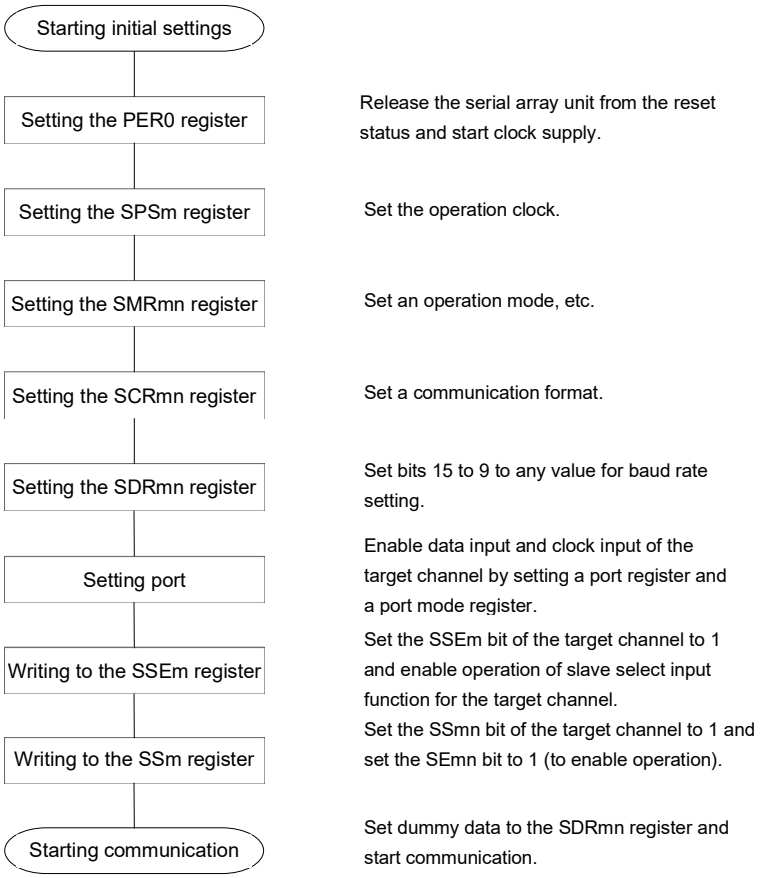

Figure 15-108. Procedure for Stopping Slave Reception

Remark m: Unit number (m = 0, 1), n: Channel number (n = 0, 1), mn = 00, 01, 10, 11

Figure 15-109. Procedure for Resuming Slave Reception

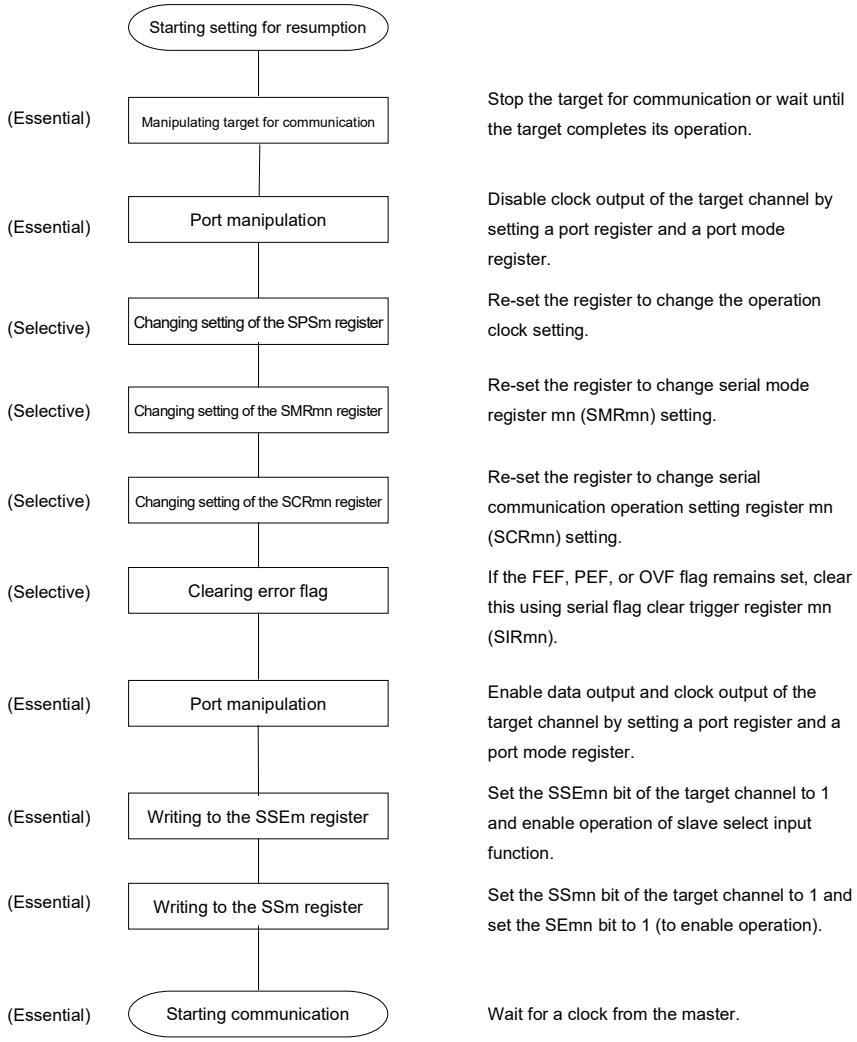

Remark m: Unit number (m = 0, 1), n: Channel number (n = 0, 1), mn = 00, 01, 10, 11

(3) Processing flow (in single-reception mode)

Figure 15-110. Timing Chart of Slave Reception (in Single-Reception Mode)
(Type 1: DAPmn = 0, CKPmn = 0)

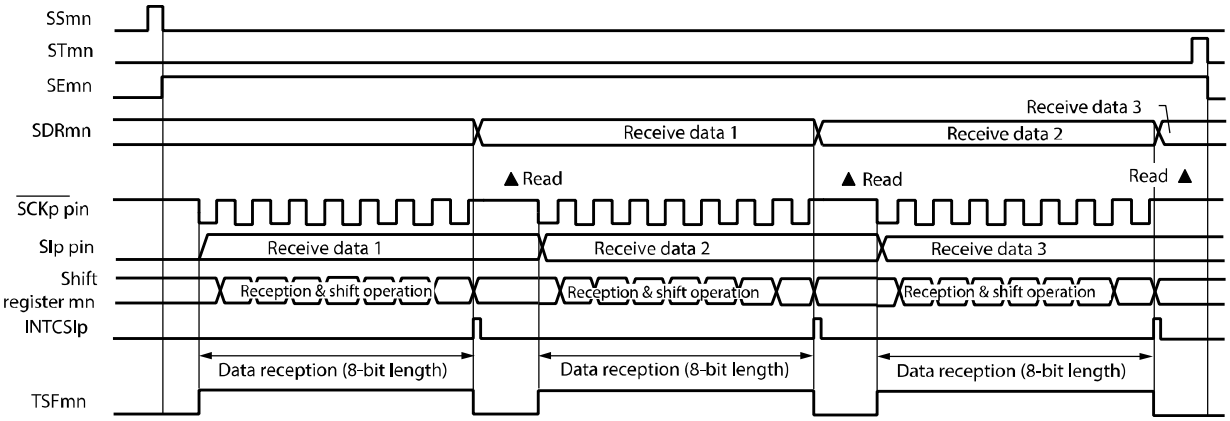

<R>

Remark m: Unit number (m = 0, 1), n: Channel number (n = 0, 1), p: CSI number (p = 00, 01, 10, 11), mn = 00, 01, 10, 11

Figure 15-111. Flowchart of Slave Reception (in Single-Reception Mode)

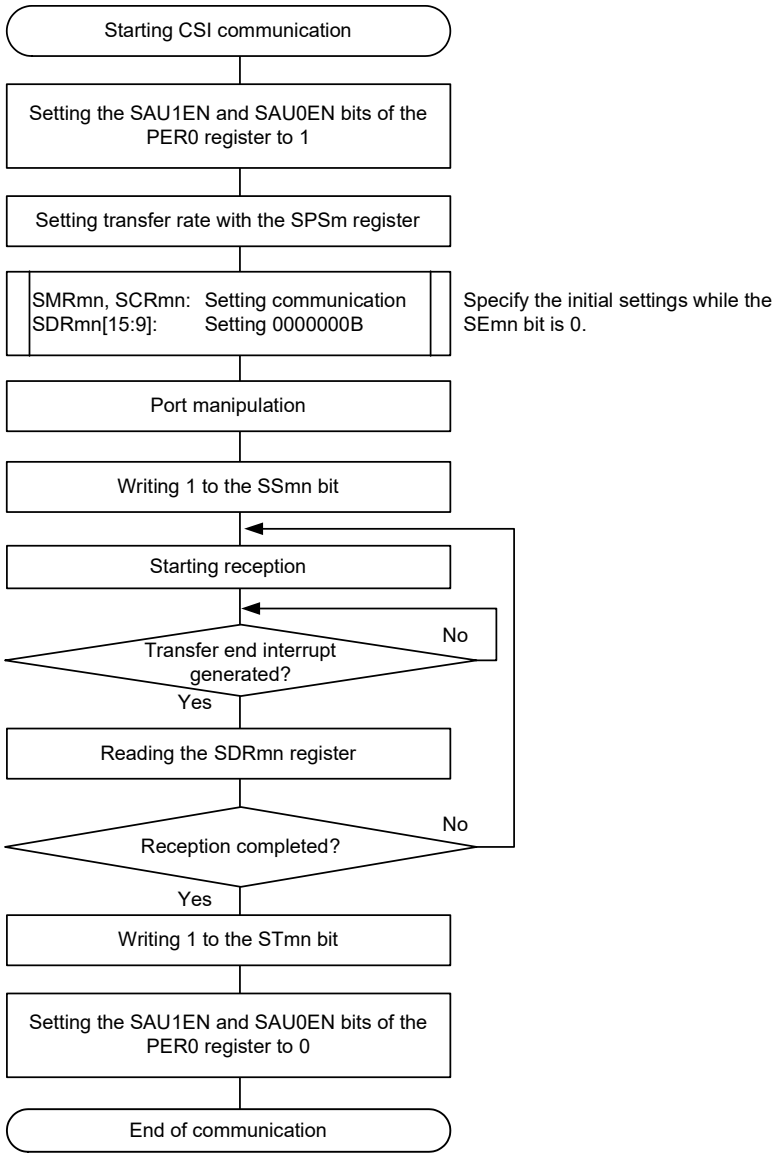

Remark m: Unit number (m = 0, 1), n: Channel number (n = 0, 1), mn = 00, 01, 10, 11

15.6.6 Slave transmission/reception

Slave transmission/reception is an operation wherein this MCU transmits/receives data to/from another device in the state of a transfer clock being input from another device.

SPI Function	CSI00	CSI01	CSI10	CSI11
Target channel	Channel 0 of SAU0	Channel 1 of SAU0	Channel 0 of SAU1	Channel 1 of SAU1
Pins used	$\overline{SCK00}$, SI00, $\overline{SO00}$, $\overline{SSI00}$	$\overline{SCK01}$, SI01, $\overline{SO01}$, $\overline{SSI01}$	$\overline{SCK10}$, SI10, $\overline{SO10}$, $\overline{SSI10}$	$\overline{SCK11}$, SI11, $\overline{SO11}$, $\overline{SSI11}$
Interrupt	INTCSI00	INTCSI01	INTCSI10	INTCSI11
	Transfer end interrupt (in single-transfer mode) or buffer empty interrupt (in continuous transfer mode) can be selected.			
Error detection flag	Overrun error detection flag (OVFmn) only			
Transfer data length	7 to 16 bits			
Transfer rate	Max. f_{MCK}/6 [Hz][Notes 1, 2].			
Data phase	Selectable by the DAPmn bit of the SCRmn register • DAPmn = 0: Data I/O starts from the start of the serial clock operation. • DAPmn = 1: Data I/O starts half a clock before the start of the serial clock operation.			
Clock phase	Selectable by the CKPmn bit of the SCRmn register • CKPmn = 0: Forward • CKPmn = 1: Reverse			
Data direction	MSB or LSB first			
SPI function	The operation of the slave select function can be selected.			

Notes 1. Because the external serial clock input to the $\overline{SCK00}$, $\overline{SCK01}$, $\overline{SCK10}$, and $\overline{SCK11}$ pins is sampled internally and used, the fastest transfer rate is f_{MCK}/6 [Hz].

2. Use this operation within a range that satisfies the conditions above and the AC characteristics in the electrical specifications.

Remarks 1. f_{MCK}: Operation clock frequency of target channel

2. m: Unit number (m = 0, 1), n: Channel number (n = 0, 1), mn = 00, 01, 10, 11

(1) Register setting

Figure 15-112. Example of Contents of Registers for Slave Transmission/Reception of SPI Function (CSI00, CSI01, CSI10, CSI11) (1/2)

(a) Serial mode register mn (SMRmn)

	15	14	13	12	11	10	9	8	7	6	5	4	3	2	1	0
SMRmn	CKSmn 0/1	CCSmn 1	0	0	0	0	0	STSmn 0	0	SISmn0 0	1	0	0	MDmn2 0	MDmn1 0	MDmn0 0/1

Operation clock (f_{MCK}) of channel n
0: Prescaler output clock CKm0 set by the SPSm register
1: Prescaler output clock CKm1 set by the SPSm register

Interrupt source of channel n
0: Transfer end interrupt
1: Buffer empty interrupt

(b) Serial communication operation setting register mn (SCRmn)

	15	14	13	12	11	10	9	8	7	6	5	4	3	2	1	0
SCRmn	TXEmn 1	RXEmn 1	DAPmn 0/1	CKPmn 0/1	0	0	PTCmn1 0	PTCmn0 0	DIRmn 0/1	0	SLCmn1 0	SLCmn0 0	DLSmn3 0/1	DLSmn2 0/1	DLSmn1 0/1	DLSmn0 0/1

Selection of the data and clock phase (For details about the setting, see **15.3 Registers Controlling Serial Array Unit**.)

Selection of data transfer sequence
0: Inputs/outputs data with MSB first
1: Inputs/outputs data with LSB first.

Setting of data length

(c) Serial data register mn (SDRmn)

(1) When operation is stopped (SEmn = 0)

	15	14	13	12	11	10	9	8	7	6	5	4	3	2	1	0
SDRmn	0000000 (baud rate setting)							0	0	0	0	0	0	0	0	0

(2) When operation is in progress (SEmn = 1) (Lower 8 bits: SDRpL)

	15	14	13	12	11	10	9	8	7	6	5	4	3	2	1	0
SDRmn	Transmit data setting/receive data register															

SDRpL

(d) Serial output register m (SOm) … Sets only the bits of the target channel.

	15	14	13	12	11	10	9	8	7	6	5	4	3	2	1	0
SOm	0	0	0	0	0	0	CKOm1 ×	CKOm0 ×	0	0	0	0	0	0	SOm1 0/1	SOm0 0/1

Caution Be sure to set transmit data to the SDRpL register before the clock from the master is started.

Remarks 1. m: Unit number (m = 0, 1), n: Channel number (n = 0, 1), p: CSI number (p = 00, 01, 10, 11), mn = 00, 01, 10, 11

2. ☐: Setting is fixed in the CSI slave transmission/reception mode
▒: Setting disabled (set to the initial value)
×: Bit that cannot be used in this mode (set to the initial value when not used in any mode)
0/1: Set to 0 or 1 depending on the usage of the user

Figure 15-112. Example of Contents of Registers for Slave Transmission/Reception of SPI Function (CSI00, CSI01, CSI10, CSI11) (2/2)

(e) Serial output enable register m (SOEm) … Sets only the bits of the target channel to 1.

	15	14	13	12	11	10	9	8	7	6	5	4	3	2	1	0
SOEm	0	0	0	0	0	0	0	0	0	0	0	0	0	0	SOEm1 0/1	SOEm0 0/1

(f) Serial channel start register m (SSm) … Sets only the bits of the target channel to 1.

<R>

	15	14	13	12	11	10	9	8	7	6	5	4	3	2	1	0
SSm	0	0	0	0	0	0	0	0	0	0	0	0	0	0	SSm1 0/1	SSm0 0/1

(g) Serial slave select enable register m (SSEm) … Controls the $\overline{\text{SSI00}}$, $\overline{\text{SSI01}}$, $\overline{\text{SSI10}}$, and $\overline{\text{SSI11}}$ pin inputs of the target channel in slave mode.

	15	14	13	12	11	10	9	8	7	6	5	4	3	2	1	0
SSEm	0	0	0	0	0	0	0	0	0	0	0	0	0	0	SSEm1 0/1	SSEm0 0/1

Remarks 1. m: Unit number (m = 0, 1), n: Channel number (n = 0, 1), p: CSI number (p = 00, 01, 10, 11), mn = 00, 01, 10, 11

2. ☐: Setting is fixed in the CSI slave transmission/reception mode

▒: Setting disabled (set to the initial value)

×: Bit that cannot be used in this mode (set to the initial value when not used in any mode)

0/1: Set to 0 or 1 depending on the usage of the user

(2) Operation procedure

Figure 15-113. Initial Setting Procedure for Slave Transmission/Reception

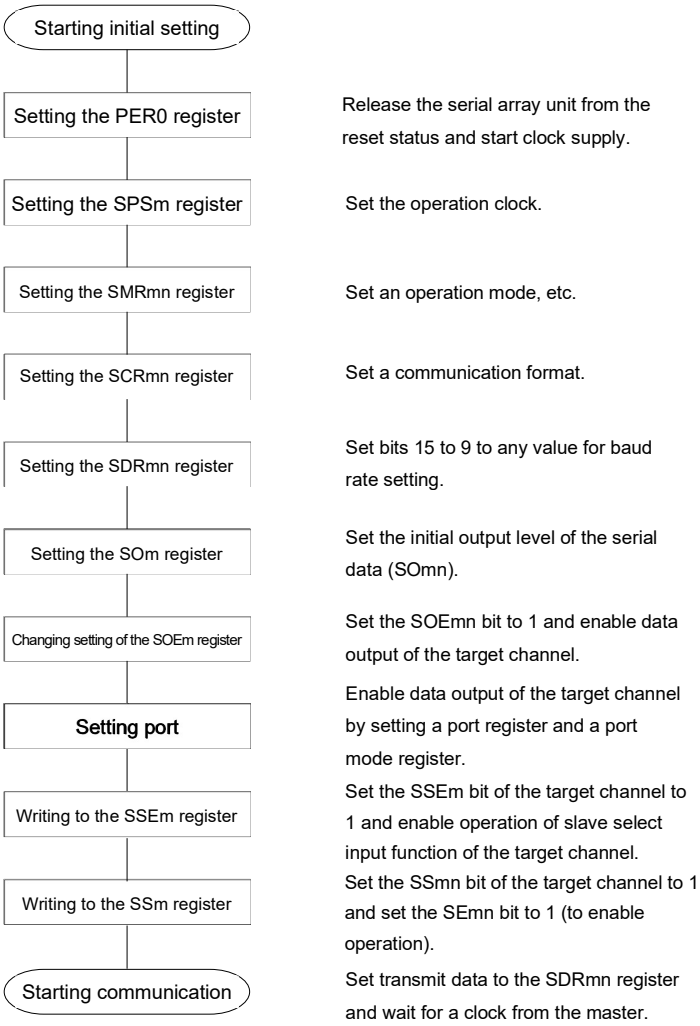

Caution Be sure to set transmit data to the SDRpL register before the clock from the master is started.

Remark m: Unit number (m = 0, 1), n: Channel number (n = 0, 1), p: CSI number (p = 00, 01, 10, 11), mn = 00, 01, 10, 11

Figure 15-114. Procedure for Stopping Slave Transmission/Reception

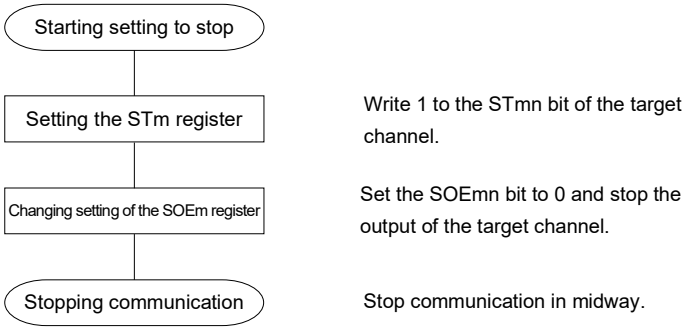

Remarks 1. Even after communication is stopped, the pin level is retained. To resume the operation, re-set serial output register m (SOm) (see **Figure 15-115 Procedure for Resuming Slave Transmission/Reception**).

2. m: Unit number (m = 0, 1), n: Channel number (n = 0, 1), p: CSI number (p = 00, 01, 10, 11), mn = 00, 01, 10, 11

Figure 15-115. Procedure for Resuming Slave Transmission/Reception

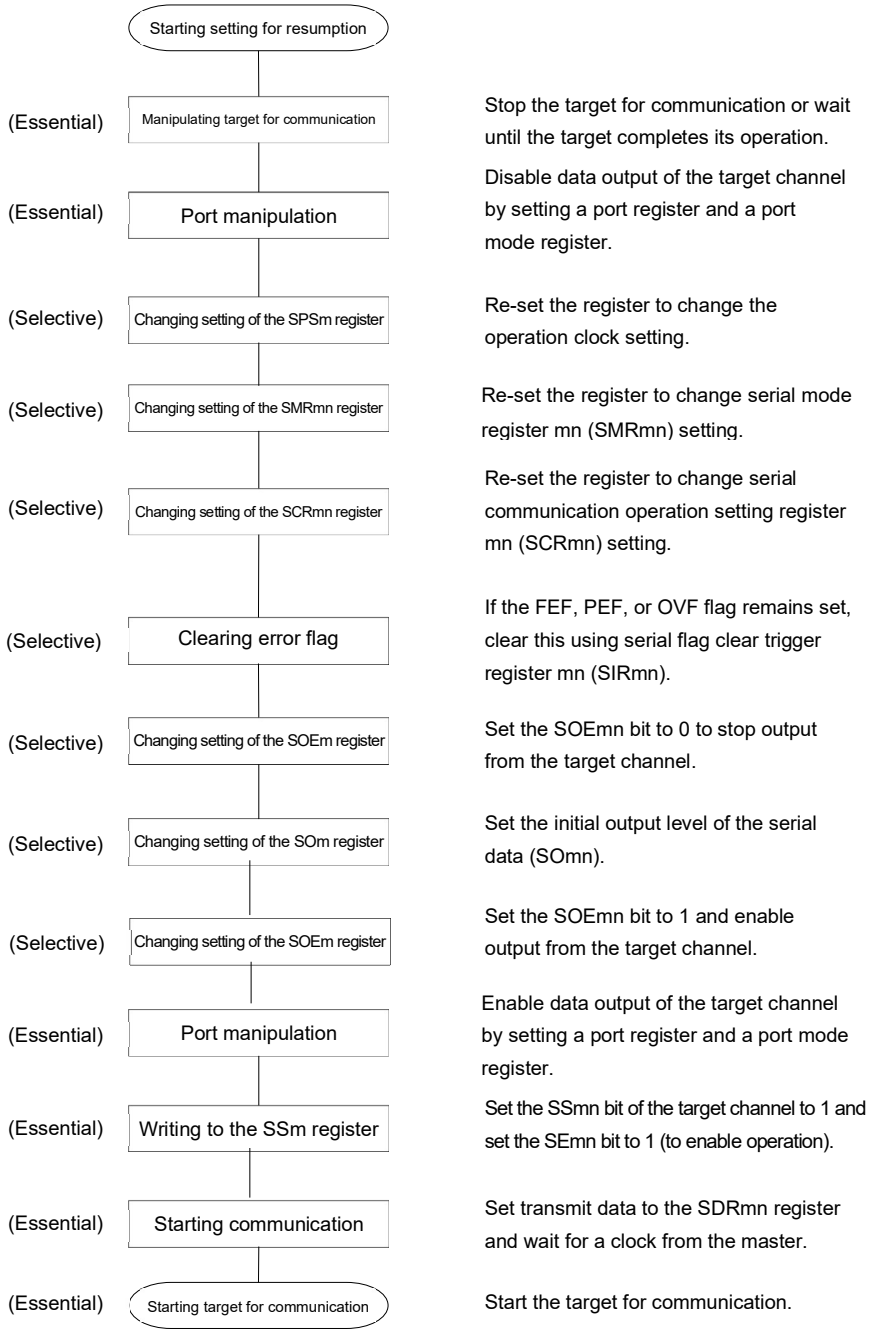

Caution Be sure to set transmit data to the SDRpL register before the clock from the master is started.

Remark m: Unit number (m = 0, 1), n: Channel number (n = 0, 1), p: CSI number (p = 00, 01, 10, 11), mn = 00, 01, 10, 11

(3) Processing flow (in single-transmission/reception mode)

Figure 15-116. Timing Chart of Slave Transmission/Reception (in Single-Transmission/Reception Mode) (Type 1: DAPmn = 0, CKPmn = 0)

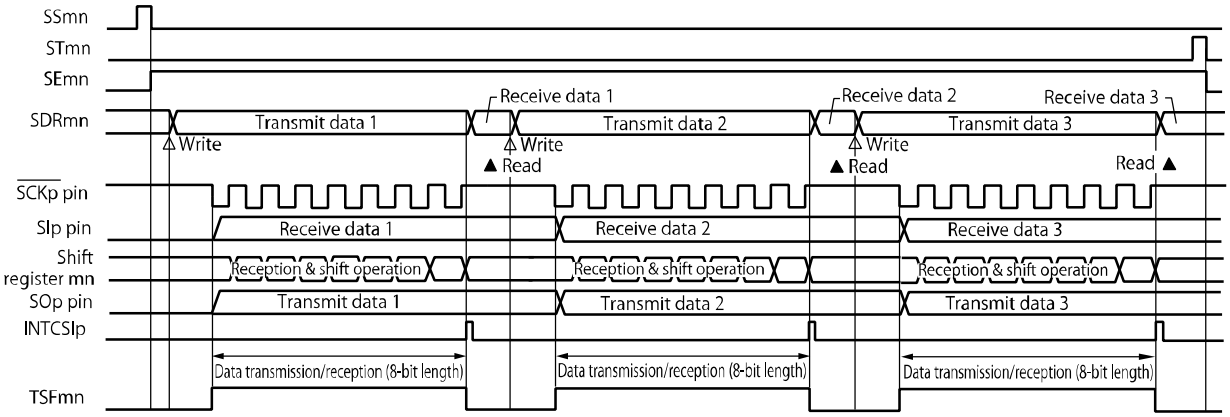

<R>

Remark m: Unit number (m = 0, 1), n: Channel number (n = 0, 1), p: CSI number (p = 00, 01, 10, 11), mn = 00, 01, 10, 11

Figure 15-117. Flowchart of Slave Transmission/Reception (in Single- Transmission/Reception Mode)

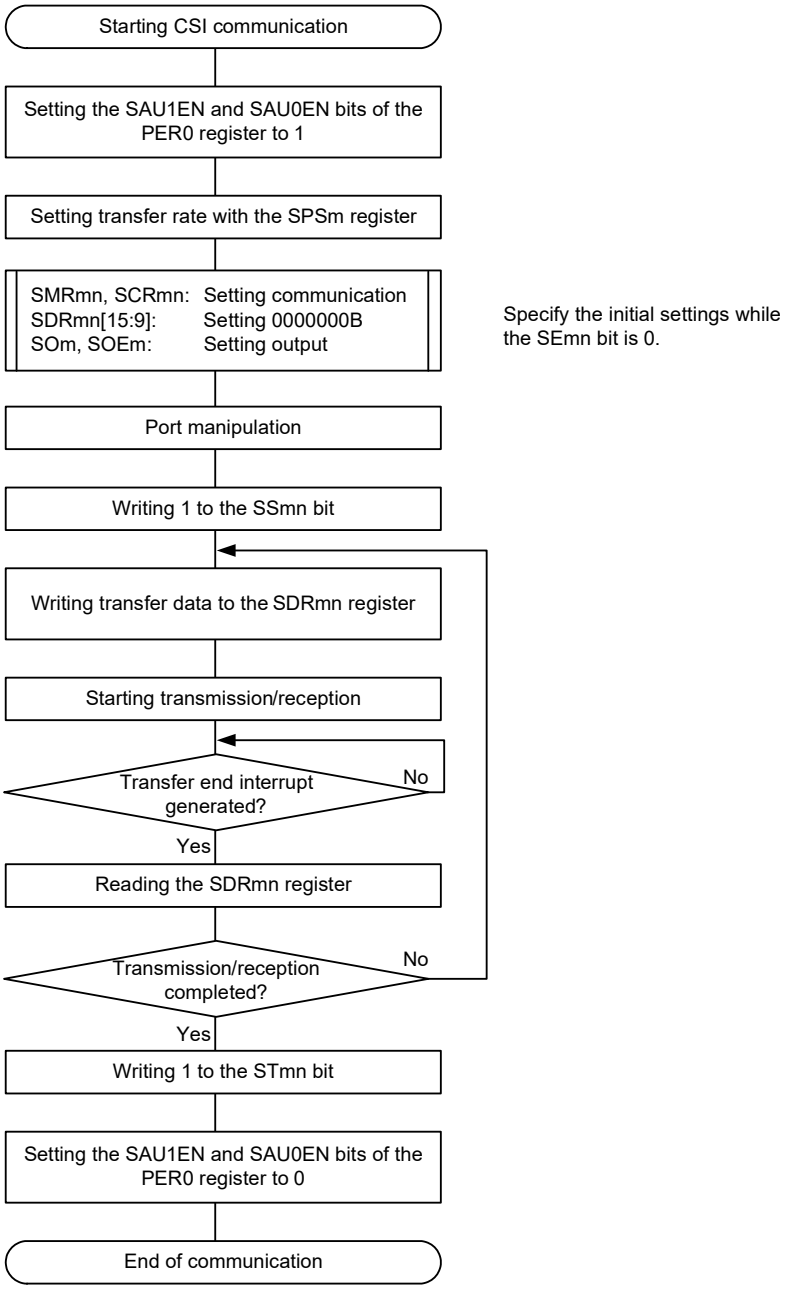

Cautions 1. Be sure to set transmit data to the SDRpL register before the clock from the master is started.

2. m: Unit number (m = 0, 1), n: Channel number (n = 0, 1), p: CSI number (p = 00, 01, 10, 11), mn = 00, 01, 10, 11

(4) Processing flow (in continuous transmission/reception mode)

Figure 15-118. Timing Chart of Slave Transmission/Reception (in Continuous Transmission/Reception Mode) (Type 1: DAPmn = 0, CKPmn = 0)

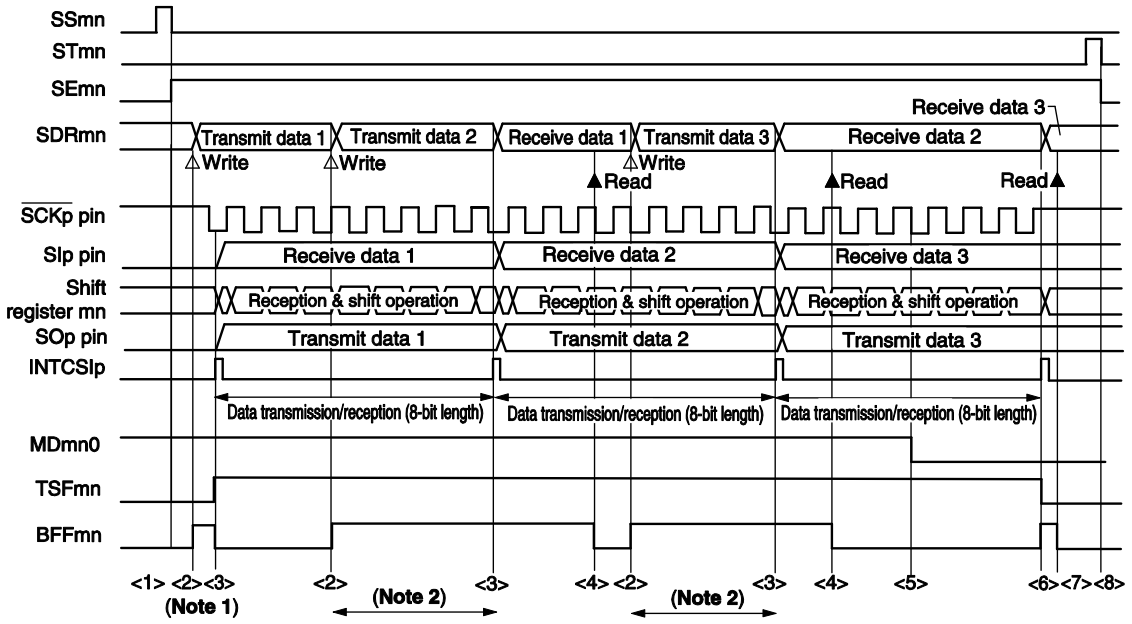

Notes 1. If transmit data is written to the SDRmn register while the BFFmn bit of serial status register mn (SSRmn) is 1 (valid data is stored in serial data register mn (SDRmn)), the transmit data is overwritten.

2. The transmit data can be read by reading the SDRmn register during this period. At this time, the transfer operation is not affected.

Caution The MDmn0 bit of serial mode register mn (SMRmn) can be rewritten even during operation. However, rewrite it before transfer of the last bit is started, so that it has been rewritten before the transfer end interrupt of the last transmit data.

Remarks 1. <1> to <8> in the figure correspond to <1> to <8> in **Figure 15-119 Flowchart of Slave Transmission/Reception (in Continuous Transmission/Reception Mode)**.

2. m: Unit number (m = 0, 1), n: Channel number (n = 0, 1), p: CSI number (p = 00, 01, 10, 11), mn = 00, 01, 10, 11

Figure 15-119. Flowchart of Slave Transmission/Reception (in Continuous Transmission/Reception Mode)

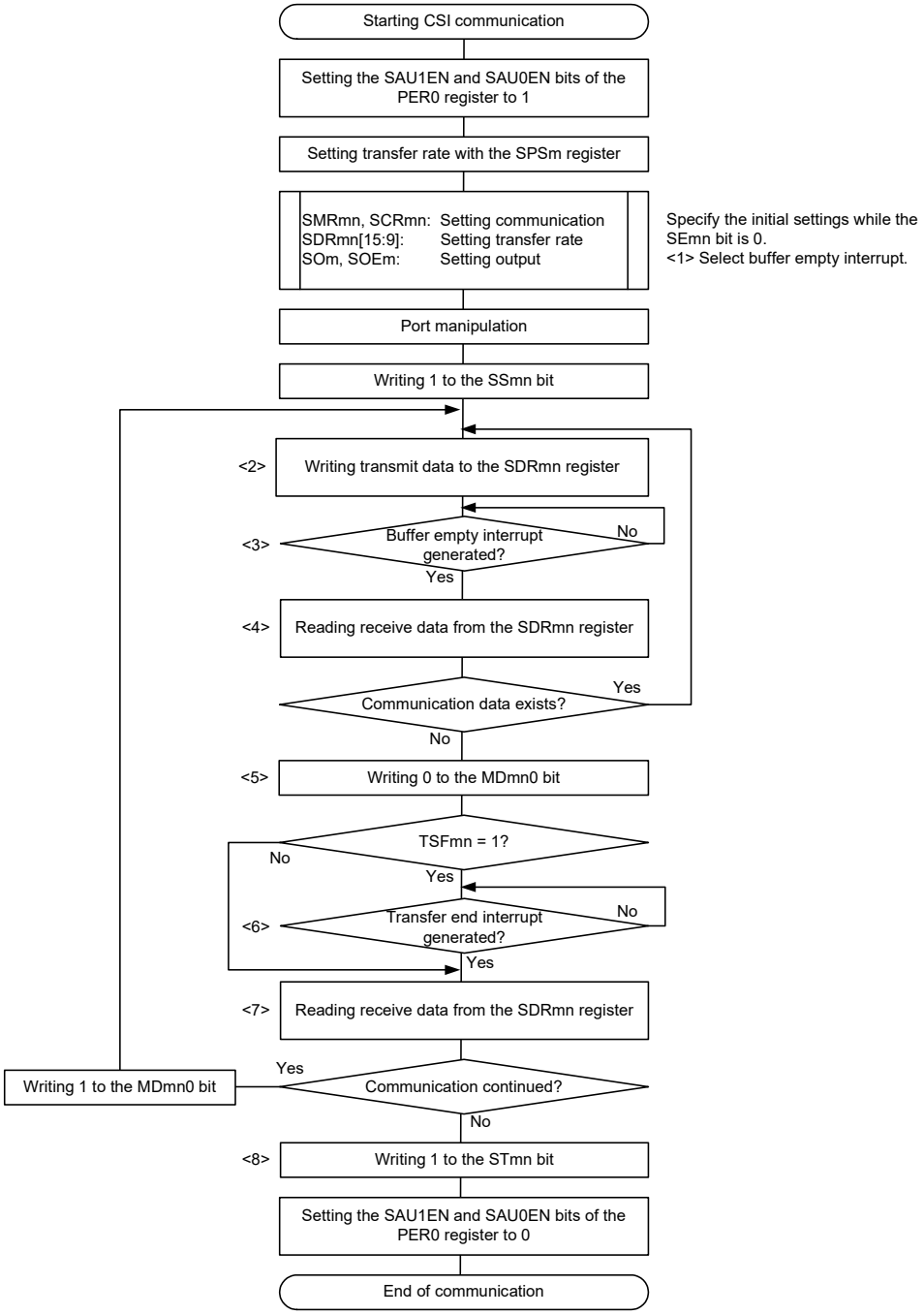

Caution Be sure to set transmit data to the SDRpL register before the clock from the master is started.

Remarks 1. <1> to <8> in the figure correspond to <1> to <8> in **Figure 15-118 Timing Chart of Slave Transmission/Reception (in Continuous Transmission/Reception Mode)**.

2. m: Unit number (m = 0, 1), n: Channel number (n = 0, 1), p: CSI number (p = 00, 01, 10, 11), mn = 00, 01, 10, 11

15.6.7 Calculating transfer clock frequency

The transfer clock frequency for SPI function (CSI00, CSI01, CSI10, CSI11) communication can be calculated by the following expressions.

(1) Master

(Transfer clock frequency) = {Operation clock (f_{MCK}) frequency of target channel} ÷ (SDRmn[15:9] + 1) ÷ 2 [Hz]

(2) Slave

(Transfer clock frequency) = {Frequency of serial clock (f_{SCK}) supplied by master}**Note** [Hz]

Note The permissible maximum transfer clock frequency is $f_{MCK}/6$.

Remark 1. The value of SDRmn[15:9] is the value of bits 15 to 9 of serial data register mn (SDRmn) (0000000B to 1111111B) and therefore is 0 to 127.

2. The operation clock (f_{MCK}) is determined by serial clock select register m (SPSm) and bit 15 (CKSmn) of serial mode register mn (SMRmn).

3. m: Unit number (m = 0, 1), n: Channel number (n = 0, 1), p: CSI number (p = 00, 01, 10, 11), mn = 00, 01, 10, 11

Table 15-3. Selection of Operation Clock For SPI Function

SMRmn Register	SPSm Register								Operation Clock (f_{MCK}) Note	
CKSmn	PRS m13	PRS m12	PRS m11	PRS m10	PRS m03	PRS m02	PRS m01	PRS m00		f_{CLK} = 32 MHz
0	X	X	X	X	0	0	0	0	f_{CLK}	32 MHz
	X	X	X	X	0	0	0	1	$f_{CLK}/2$	16 MHz
	X	X	X	X	0	0	1	0	$f_{CLK}/2^2$	8 MHz
	X	X	X	X	0	0	1	1	$f_{CLK}/2^3$	4 MHz
	X	X	X	X	0	1	0	0	$f_{CLK}/2^4$	2 MHz
	X	X	X	X	0	1	0	1	$f_{CLK}/2^5$	1 MHz
	X	X	X	X	0	1	1	0	$f_{CLK}/2^6$	500 kHz
	X	X	X	X	0	1	1	1	$f_{CLK}/2^7$	250 kHz
	X	X	X	X	1	0	0	0	$f_{CLK}/2^8$	125 kHz
	X	X	X	X	1	0	0	1	$f_{CLK}/2^9$	62.5 kHz
	X	X	X	X	1	0	1	0	$f_{CLK}/2^{10}$	31.25 kHz
	X	X	X	X	1	0	1	1	$f_{CLK}/2^{11}$	15.63 kHz
1	0	0	0	0	X	X	X	X	f_{CLK}	32 MHz
	0	0	0	1	X	X	X	X	$f_{CLK}/2$	16 MHz
	0	0	1	0	X	X	X	X	$f_{CLK}/2^2$	8 MHz
	0	0	1	1	X	X	X	X	$f_{CLK}/2^3$	4 MHz
	0	1	0	0	X	X	X	X	$f_{CLK}/2^4$	2 MHz
	0	1	0	1	X	X	X	X	$f_{CLK}/2^5$	1 MHz
	0	1	1	0	X	X	X	X	$f_{CLK}/2^6$	500 kHz
	0	1	1	1	X	X	X	X	$f_{CLK}/2^7$	250 kHz
	1	0	0	0	X	X	X	X	$f_{CLK}/2^8$	125 kHz
	1	0	0	1	X	X	X	X	$f_{CLK}/2^9$	62.5 kHz
	1	0	1	0	X	X	X	X	$f_{CLK}/2^{10}$	31.25 kHz
	1	0	1	1	X	X	X	X	$f_{CLK}/2^{11}$	15.63 kHz
Other than above										Setting prohibited

Note When changing the clock selected for f_{CLK} (by changing the system clock control register (CKC) value), do so after having stopped (serial channel stop register m (STm) = 0003H) the operation of the serial array unit (SAU).

Remarks 1. X: Don't care

2. m: Unit number (m = 0, 1), n: Channel number (n = 0, 1), mn = 00, 01, 10, 11

15.6.8 Procedure for processing errors that occurred during clock synchronous serial communication with SPI function

The procedure for processing errors that occurred during clock synchronous serial communication with SPI function is described in Figure 15-120.

Figure 15-120. Processing Procedure in Case of Overrun Error

Software Manipulation	Hardware Status	Remark
Reads serial data register mn (SDRmn). →	The BFFmn bit of the SSRmn register is set to 0 and channel n is enabled to receive data.	This is to prevent an overrun error if the next reception is completed during error processing.
Reads serial status register mn (SSRmn).		Error type is identified and the read value is used to clear error flag.
Writes 1 to serial flag clear trigger register mn (SIRmn). →	Error flag is cleared.	Error can be cleared only during reading, by writing the value read from the SSRmn register to the SIRmn register without modification.

Remark m: Unit number (m = 0, 1), n: Channel number (n = 0, 1), mn = 00, 01, 10, 11

15.7 Operation of UART (UART0, UART1) Communication

This is a start-stop synchronization function using two lines: serial data transmission (TxD) and serial data reception (RxD) lines. By using these two communication lines, each data frame, which consist of a start bit, data, parity bit, and stop bit, is transferred asynchronously (using the internal baud rate) between the microcontroller and the other communication party. Full-duplex UART communication can be performed by using a channel dedicated to transmission (even-numbered channel) and a channel dedicated to reception (odd-numbered channel). The LIN-bus can be implemented by using timer array unit 0 with an external interrupt (INTP0).

[Data transmission/reception]

- Data length of 7, 8, 9, or 16 bits
- Select the MSB/LSB first
- Level setting of transmit/receive data and select of reverse
- Parity bit appending and parity check functions
- Stop bit appending

[Interrupt function]

- Transfer end interrupt/buffer empty interrupt

[Error detection flag]

- Framing error, parity error, or overrun error

The LIN-bus is accepted in UART0 (channels 0 and 1 of unit 0).

[LIN-bus functions]

- Wakeup signal detection
- Break field (BF) detection
- Sync field measurement, baud rate calculation

} Using the external interrupt (INTP0) and timer array unit 0

UART0 uses channels 0 and 1 of SAU0.
UART1 uses channels 0 and 1 of SAU1.

- Group A products

Unit	Channel	Used as CSI	Used as UART	Used as Simplified I^2C
0	0	CSI00 (supporting SPI function) Note2	UART0 (supporting LIN-bus)	IIC00
	1	CSI01 (supporting SPI function) Note2		IIC01

- Products of Groups C-1 and D-1

Unit	Channel	Used as CSI	Used as UART	Used as Simplified I^2C
0	0	CSI00 (supporting SPI function) Note2	UART0 (supporting LIN-bus)	IIC00
	1	CSI01 (supporting SPI function) Note2		IIC01
1	0	CSI10 (supporting SPI function) Note1, 2	UART1	IIC10
	1	-		-

- Products of Groups B, C-2, D-2, and E

Unit	Channel	Used as CSI	Used as UART	Used as Simplified I^2C
0	0	CSI00 (supporting SPI function) Note2	UART0 (supporting LIN-bus)	IIC00
	1	CSI01 (supporting SPI function) Note2		IIC01
1	0	CSI10 (supporting SPI function) Note1, 2	UART1	IIC10
	1	CSI11 (supporting SPI function) Note2		IIC11

Notes 1. 48-pin, 32-pin and 30-pin products do not have $\overline{SSI10}$ pin.

2. Set CKPmn bit of SCRmn register to 1, when SSEmn = 1 (Enables $\overline{SSImn}$ pin input).
(m = 0, 1, n = 0, 1)

Caution **When using serial array unit as UARTs, the channels of both the transmitting side (even-number channel) and the receiving side (odd-number channel) can be used only as UARTs.**

Remark Group A: RL78/F13 (LIN incorporated) products with 20, 30, 32, 48, or 64 pins and 16 Kbytes to 64 Kbytes of code flash memory
Group B: RL78/F13 (LIN incorporated) products with 48 or 64 pins and 96 Kbytes to 128 Kbytes of code flash memory or with 80 pins and 64 Kbytes to 128 Kbytes of code flash memory
Group C-1: RL78/F13 (CAN and LIN incorporated) products with 30 or 32 pins
Group C-2: RL78/F13 (CAN and LIN incorporated) products with 48, 64, or 80 pins
Group D-1: RL78/F14 products with 30 or 32 pins
Group D-2: RL78/F14 products with 48, 64, or 80 pins and 48 Kbytes to 96 Kbytes of code flash memory
Group E: RL78/F14 products with 48, 64, or 80 pins and 128 Kbytes to 256 Kbytes of code flash memory or with 100 pins and 64 Kbytes to 256 Kbytes of code flash memory

UART performs the following four types of communication operations.

- UART transmission (See **15.7.1 UART transmission**.)
- UART reception (See **15.7.2 UART reception**.)
- LIN transmission (UART0 only) (See **15.8.1 LIN transmission**.)
- LIN reception (UART0 only) (See **15.8.2 LIN reception**.)

15.7.1 UART transmission

UART transmission is an operation to transmit data from this MCU to another device asynchronously (start-stop synchronization).

Of two channels used for UART, the even channel is used for UART transmission.

<R>

UART	UART0	UART1
Target channel	Channel 0 of SAU0	Channel 0 of SAU1
Pins used	TxD0	TxD1
Interrupt	INTST0	INTST1
	Transfer end interrupt (in single-transfer mode) or buffer empty interrupt (in continuous transfer mode) can be selected.	
Error detection flag	None	
Transfer data length	7 to 9 or 16 bits	
Transfer rate	Max. $f_{MCK}/6$ [bps] (SDRmn [15:9] = 2 or more), Min. $f_{CLK}/(2 \times 2^{15} \times 128)$ [bps] Note	
Data phase	Forward output (default: high level) Reverse output (default: low level)	
Parity bit	The following selectable • No parity bit • Appending 0 parity • Appending even parity • Appending odd parity	
Stop bit	The following selectable • Appending 1 bit • Appending 2 bits	
Data direction	MSB or LSB first	

Note Use this operation within a range that satisfies the conditions above and the AC characteristics in the electrical specifications.

Remarks **1.** f_{MCK}: Operation clock frequency of target channel
f_{CLK}: System clock frequency

<R> **2.** m: Unit number (m = 0, 1), n: Channel number (n = 0), mn = 00, 10

(1) Register setting

Figure 15-121. Example of Contents of Registers for UART Transmission of UART (UART0, UART1) (1/2)

(a) Serial mode register mn (SMRmn)

	15	14	13	12	11	10	9	8	7	6	5	4	3	2	1	0
SMRmn	CKSmn 0/1	CCSmn 0	0	0	0	0	0	STSmn 0	0	SISmn0 0	1	0	0	MDmn2 0	MDmn1 1	MDmn0 0/1

Operation clock (f_{MCK}) of channel n
0: Prescaler output clock CKm0 set by the SPSm register
1: Prescaler output clock CKm1 set by the SPSm register

Interrupt source of channel n
0: Transfer end interrupt
1: Buffer empty interrupt

<R> **(b) Serial communication operation setting register mn (SCRmn)**

	15	14	13	12	11	10	9	8	7	6	5	4	3	2	1	0
SCRmn	TXEmn 1	RXEmn 0	DAPmn 0	CKPmn 0	0	0	PTCmn1 0/1	PTCmn0 0/1	DIRmn 0/1	0	SLCmn1 0/1	SLCmn0 0/1	DLSmn3 0/1	DLSmn2 0/1	DLSmn1 0/1	DLSmn0 0/1

Setting of parity bit
00B: No parity
01B: Appending 0 parity
10B: Appending Even parity
11B: Appending Odd parity

Selection of data transfer sequence
0: Inputs/outputs data with MSB first
1: Inputs/outputs data with LSB first.

Setting of stop bit
01B: Appending 1 bit
10B: Appending 2 bits

Setting of data length
0110B: 7 bits
0111B: 8 bits
1000B: 9 bits
1111B: 16 bits

(c) Serial data register mn (SDRmn)

(1) When operation is stopped (SEmn = 0)

	15	14	13	12	11	10	9	8	7	6	5	4	3	2	1	0
SDRmn	Baud rate setting							0	0	0	0	0	0	0	0	0

(2) When operation is in progress (SEmn = 1) (Lower 8 bits: SDRmnL)

	15	14	13	12	11	10	9	8	7	6	5	4	3	2	1	0
SDRmn	Transmit data setting															

SDRmnL

(d) Serial output level register m (SOLm) … Sets only the bits of the target channel.

	15	14	13	12	11	10	9	8	7	6	5	4	3	2	1	0
SOLm	0	0	0	0	0	0	0	0	0	0	0	0	0	0	0	SOLm0 0/1

0: Forward (normal) transmission
1: Reverse transmission

Note Before transmission is started, be sure to set to 1 when the SOLmn bit of the target channel is set to 0, and set to 0 when the SOLmn bit of the target channel is set to 1. The value varies depending on the communication data during communication operation.

Remarks 1. m: Unit number (m = 0, 1), n: Channel number (n = 0), mn = 00, 10

2. ☐: Setting is fixed in the UART transmission mode, ▒: Setting disabled (set to the initial value)
×: Bit that cannot be used in this mode (set to the initial value when not used in any mode)
0/1: Set to 0 or 1 depending on the usage of the user

Figure 15-121. Example of Contents of Registers for UART Transmission of UART (UART0, UART1) (2/2)

(e) Serial output register m (SOm) … Sets only the bits of the target channel.

	15	14	13	12	11	10	9	8	7	6	5	4	3	2	1	0
SOm	0	0	0	0	0	0	CKOm1 ×	CKOm0 ×	0	0	0	0	0	0	SOm1 ×	SOm0 0/1 Note

0: Serial data output value is 0
1: Serial data output value is 1

(f) Serial output enable register m (SOEm) … Sets only the bits of the target channel to 1.

	15	14	13	12	11	10	9	8	7	6	5	4	3	2	1	0
SOEm	0	0	0	0	0	0	0	0	0	0	0	0	0	0	SOEm1 ×	SOEm0 0/1

(g) Serial channel start register m (SSm) … Sets only the bits of the target channel to 1.

	15	14	13	12	11	10	9	8	7	6	5	4	3	2	1	0
SSm	0	0	0	0	0	0	0	0	0	0	0	0	0	0	SSm1 ×	SSm0 0/1

Note Before transmission is started, be sure to set to 1 when the SOLmn bit of the target channel is set to 0, and set to 0 when the SOLmn bit of the target channel is set to 1. The value varies depending on the communication data during communication operation.

Remarks 1. m: Unit number (m = 0, 1), n: Channel number (n = 0), mn = 00, 10

2. ☐ : Setting disabled (set to the initial value)

×: Bit that cannot be used in this mode (set to the initial value when not used in any mode)

0/1: Set to 0 or 1 depending on the usage of the user

(2) Operation procedure

Figure 15-122. Initial Setting Procedure for UART Transmission

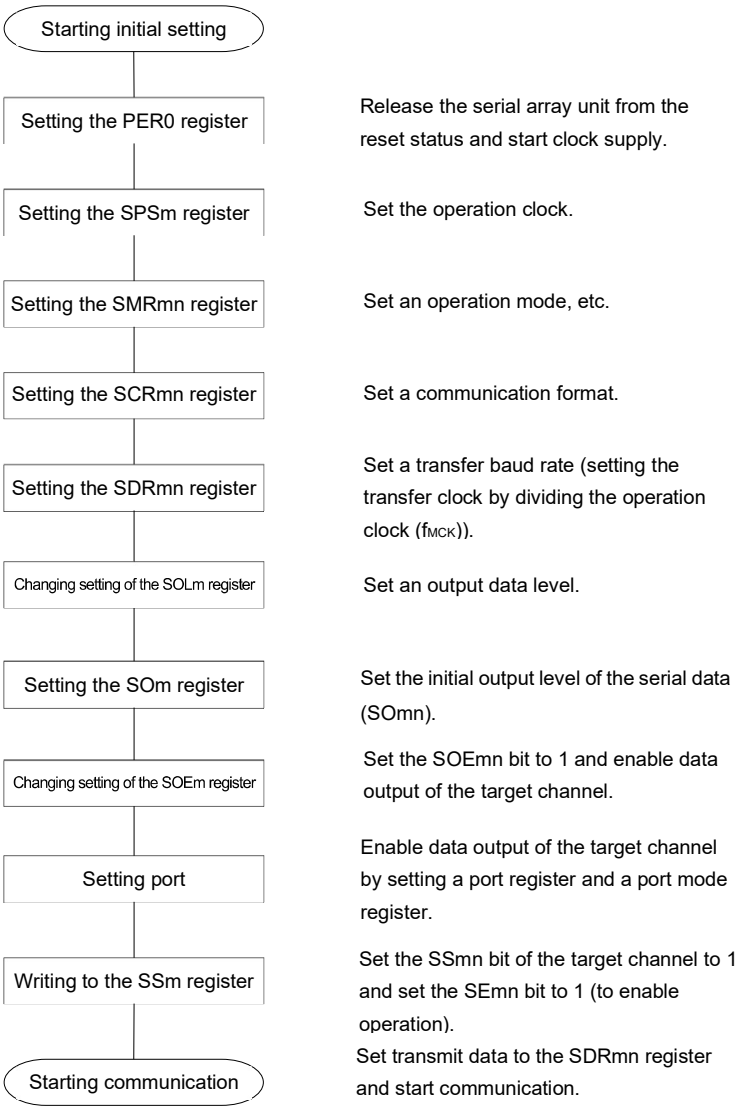

Remark m: Unit number (m = 0, 1), n: Channel number (n = 0), mn = 00, 10

Figure 15-123. Procedure for Stopping UART Transmission

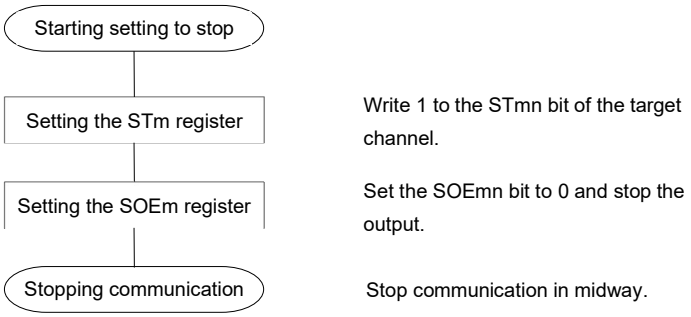

Remarks 1. Even after communication is stopped, the pin level is retained. To resume the operation, re-set serial output register m (SOm) (see **Figure 15-124 Procedure for Resuming UART Transmission**).

2. m: Unit number (m = 0, 1), n: Channel number (n = 0), mn = 00, 10

Figure 15-124. Procedure for Resuming UART Transmission

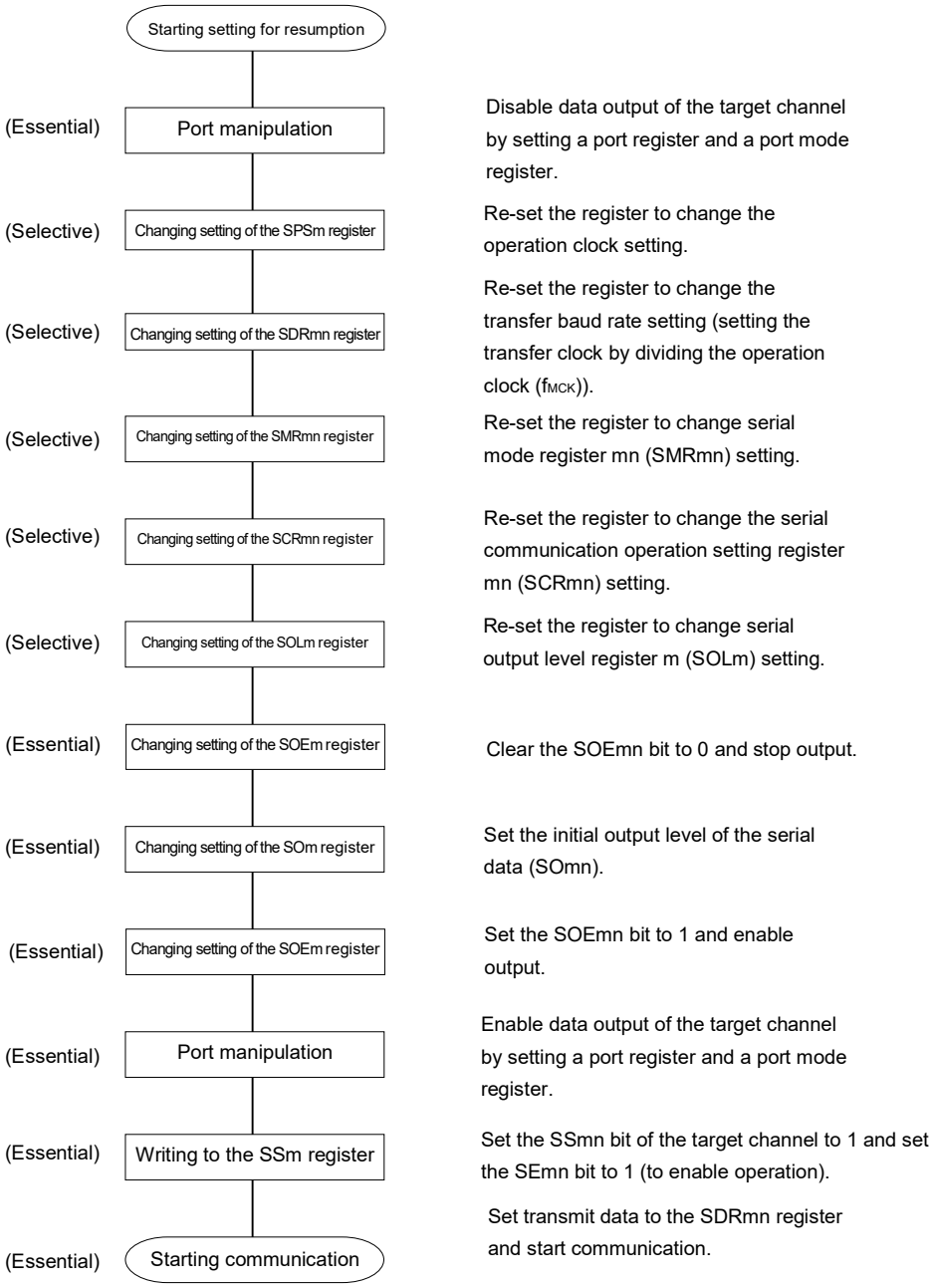

Remark m: Unit number (m = 0, 1), n: Channel number (n = 0), mn = 00, 10

(3) Processing flow (in single-transmission mode)

Figure 15-125. Timing Chart of UART Transmission (in Single-Transmission Mode)

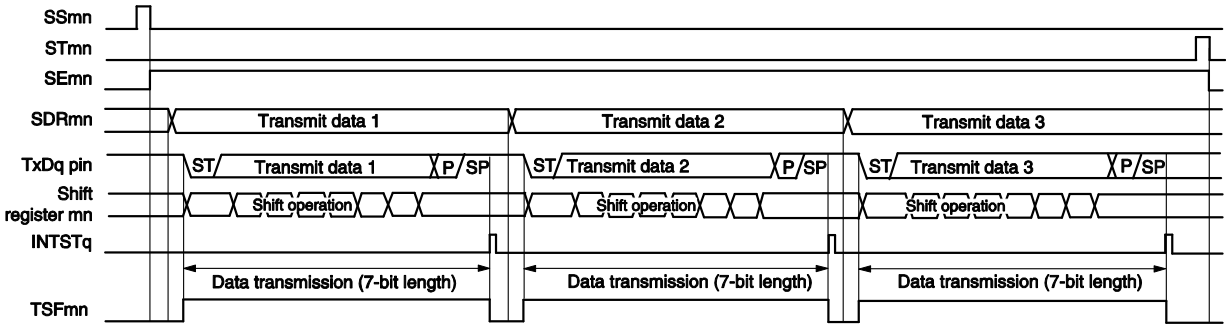

Remark m: Unit number (m = 0, 1), n: Channel number (n = 0), q: UART number (q = 0, 1)
mn = 00, 10

Figure 15-126. Flowchart of UART Transmission (in Single-Transmission Mode)

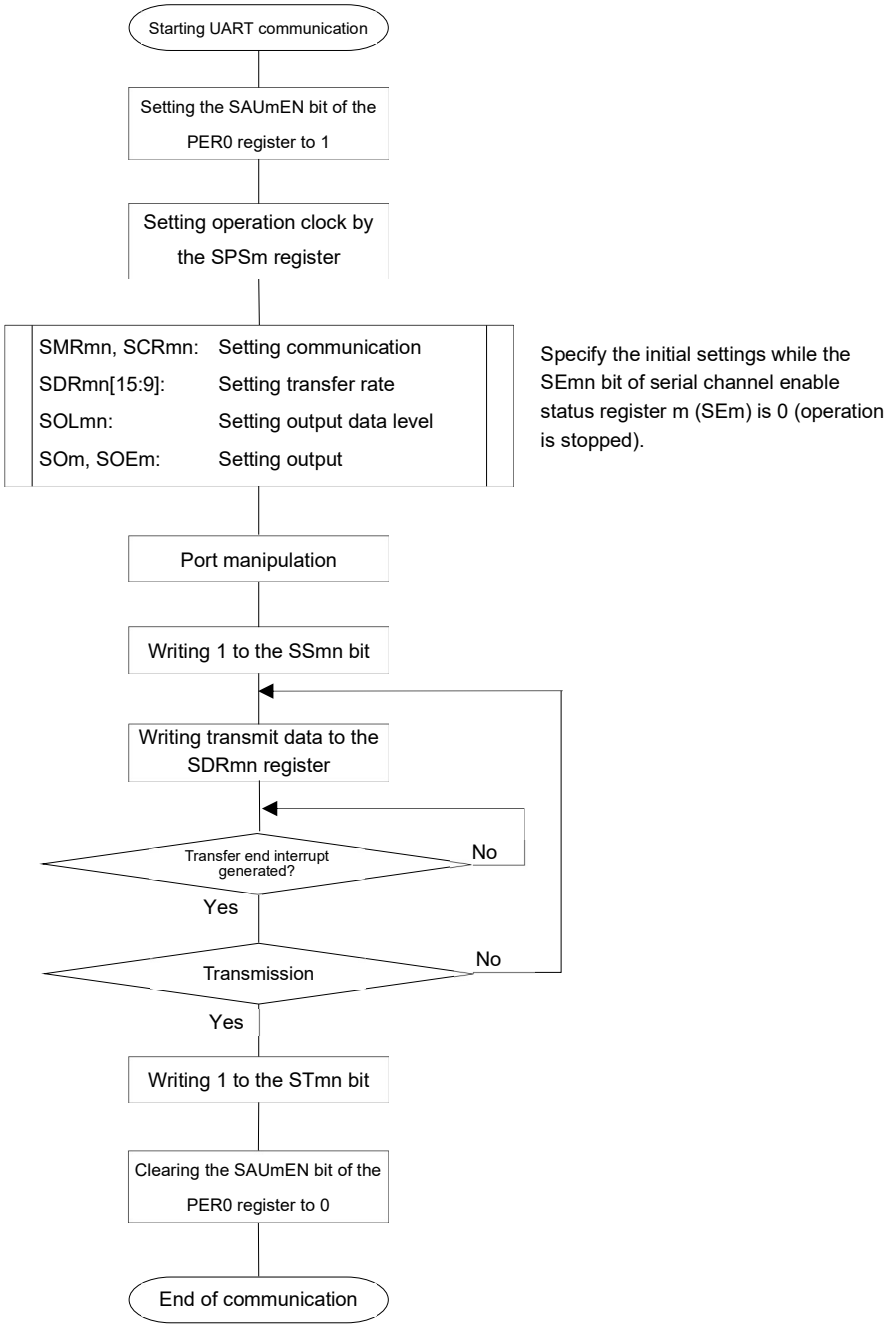

Remark m: Unit number (m = 0, 1), n: Channel number (n = 0), mn = 00, 10

(4) Processing flow (in continuous transmission mode)

Figure 15-127. Timing Chart of UART Transmission (in Continuous Transmission Mode)

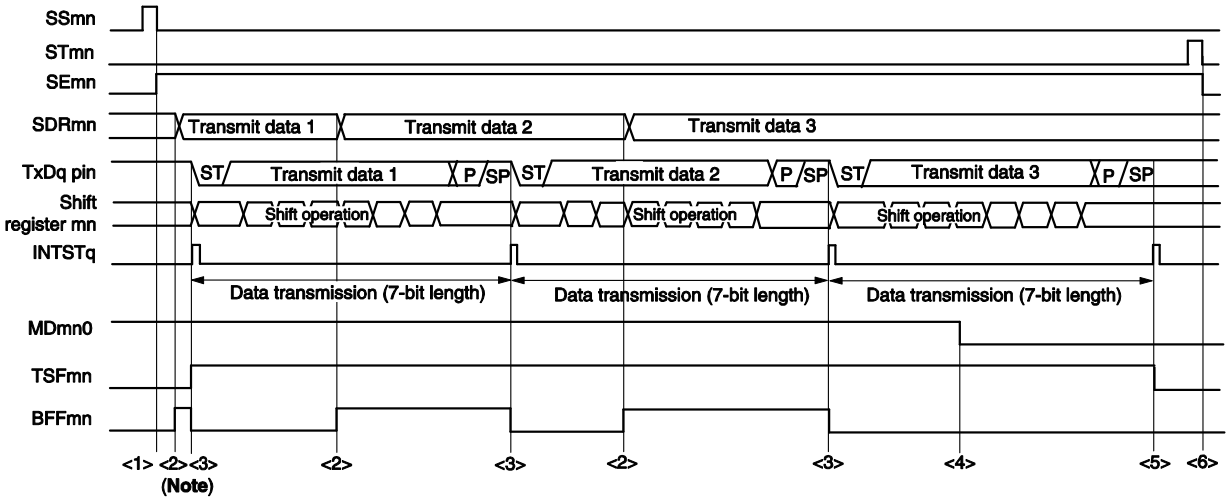

Note If transmit data is written to the SDRmn register while the BFFmn bit of serial status register mn (SSRmn) is 1 (valid data is stored in serial data register mn (SDRmn)), the transmit data is overwritten.

Caution **The MDmn0 bit of serial mode register mn (SSRmn) can be rewritten even during operation. However, rewrite it before transfer of the last bit is started, so that it will be rewritten before the transfer end interrupt of the last transmit data.**

Remark m: Unit number (m = 0, 1), n: Channel number (n = 0), q: UART number (q = 0, 1)
mn = 00, 10

Figure 15-128. Flowchart of UART Transmission (in Continuous Transmission Mode)

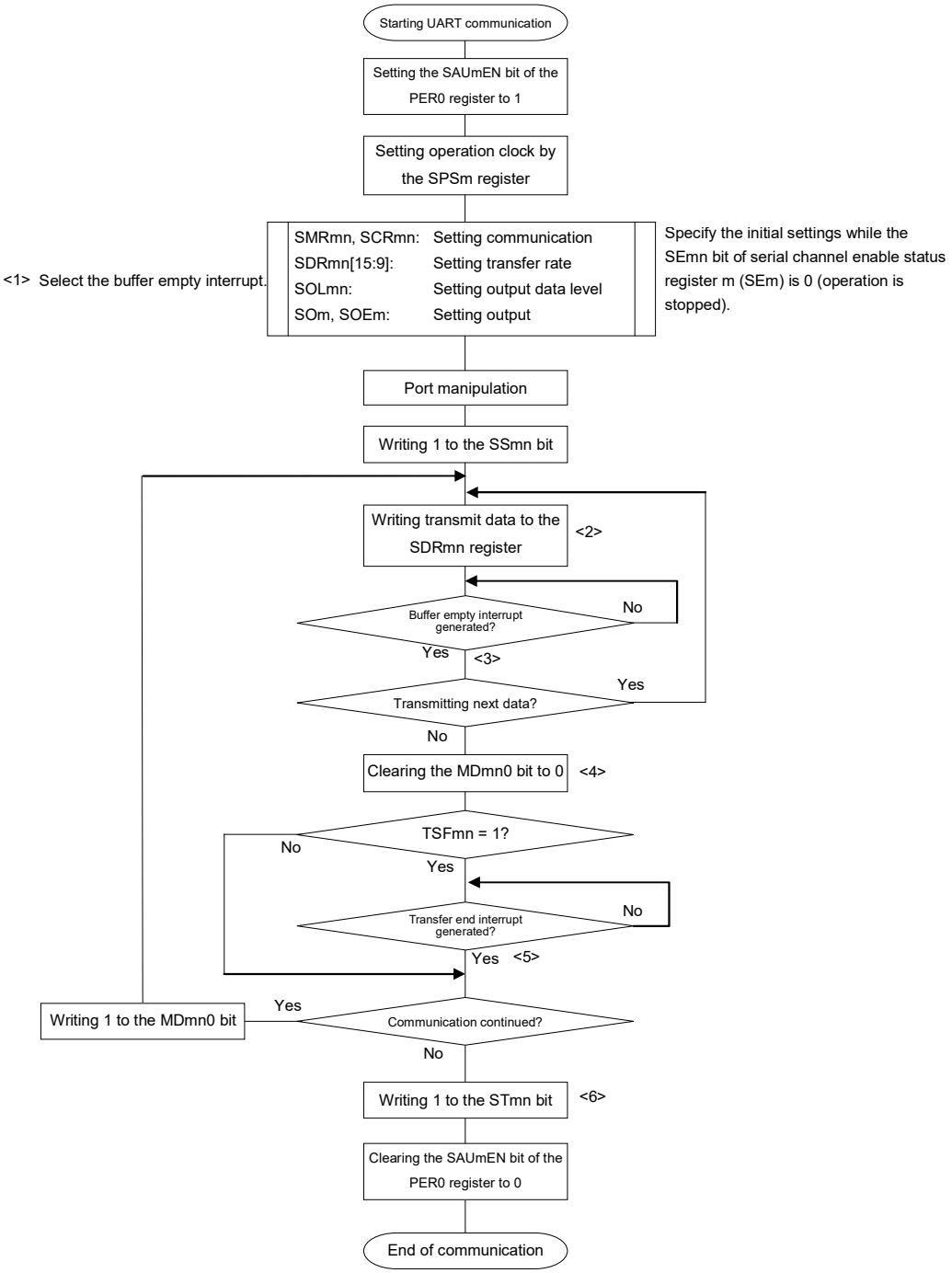

Remarks 1. <1> to <6> in the figure correspond to <1> to <6> in **Figure 15-127 Timing Chart of UART Transmission (in Continuous Transmission Mode)**.

2. m: Unit number (m = 0, 1), n: Channel number (n = 1), mn = 00, 10

15.7.2 UART reception

UART reception is an operation wherein this MCU asynchronously receives data from another device (start-stop synchronization).

For UART reception, the odd-number channel of the two channels used for UART is used. The SMR register of both the odd- and even-numbered channels must be set.

UART	UART0	UART1
Target channel	Channel 1 of SAU0	Channel 1 of SAU1
Pins used	RxD0	RxD1
Interrupt	INTSR0	INTSR1
	Transfer end interrupt only (Setting the buffer empty interrupt is prohibited.)	
Error detection flag	• Framing error detection flag (FEFmn) • Parity error detection flag (PEFmn) • Overrun error detection flag (OVFmn)	
Transfer data length	7 to 9 or 16 bits	
Transfer rate	Max. $f_{MCK}/6$ [bps] (SDRmn [15:9] = 3 or more), Min. $f_{CLK}/(2 \times 2^{15} \times 128)$ [bps] Note	
Data phase	Forward output (default: high level) Reverse output (default: low level)	
Parity bit	The following selectable • No parity bit (no parity check) • Appending 0 parity (no parity check) • Appending even parity • Appending odd parity	
Stop bit	Appending 1 bit	
Data direction	MSB or LSB first	

Note Use this operation within a range that satisfies the conditions above and the AC characteristics in the electrical specifications.

Remarks 1. f_{MCK}: Operation clock frequency of target channel
f_{CLK}: System clock frequency

2. m: Unit number (m = 0, 1), n: Channel number (n = 1), mn = 01, 11

(1) Register setting

Figure 15-129. Example of Contents of Registers for UART Reception of UART (UART0, UART1) (1/2)

(a) Serial mode register mn (SMRmn)

	15	14	13	12	11	10	9	8	7	6	5	4	3	2	1	0
SMRmn	CKSmn 0/1	CCSmn 0	0	0	0	0	0	STSmn 1	0	SISmn0 0/1	1	0	0	MDmn2 0	MDmn1 1	MDmn0 0

Operation clock (f_{MCK}) of channel n
0: Prescaler output clock CKm0 set by the SPSm register
1: Prescaler output clock CKm1 set by the SPSm register

0: Forward (normal) reception
1: Reverse reception

Interrupt source of channel n
0: Transfer end interrupt

(b) Serial mode register mr (SMRmr)

	15	14	13	12	11	10	9	8	7	6	5	4	3	2	1	0
SMRmr	CKSmr 0/1	CCSmr 0	0	0	0	0	0	STSmr 0	0	SISmr0 0	1	0	0	MDmr2 0	MDmr1 1	MDmr0 0/1

Same setting value as CKSmn bit

Interrupt source of channel r
0: Transfer end interrupt
1: Buffer empty interrupt

<R> **(c) Serial communication operation setting register mn (SCRmn)**

	15	14	13	12	11	10	9	8	7	6	5	4	3	2	1	0
SCRmn	TXEmn 0	RXEmn 1	DAPmn 0	CKPmn 0	0	0	PTCmn1 0/1	PTCmn0 0/1	DIRmn 0/1	0	SLCmn1 0	SLCmn0 1	DLSmn3 0/1	DLSmn2 0/1	DLSmn1 0/1	DLSmn0 0/1

Setting of parity bit
00B: No parity
01B: No parity judgment
10B: Appending Even parity
11B: Appending Odd parity

Selection of data transfer sequence
0: Inputs/outputs data with MSB first
1: Inputs/outputs data with LSB first.

Setting of data length
0110B: 7 bits
0111B: 8 bits
1000B: 9 bits
1111B: 16 bits

(d) Serial data register mn (SDRmn)

(1) When operation is stopped (SEmn = 0)

	15	14	13	12	11	10	9	8	7	6	5	4	3	2	1	0
SDRmn	Baud rate setting							0	0	0	0	0	0	0	0	0

(2) When operation is in progress (SEmn = 1) (Lower 8 bits: SDRmnL)

	15	14	13	12	11	10	9	8	7	6	5	4	3	2	1	0
SDRmn	Receive data register															

SDRmnL

Caution For the UART reception, be sure to set the SMRmr register of channel r that is to be paired with channel n.

Remarks 1. m: Unit number (m = 0, 1), n: Channel number (n = 1), mn = 01, 11
r: Channel number (r = n – 1), q: UART number (q = 0, 1)

2. □ : Setting is fixed in the UART reception mode, ▒ : Setting disabled (set to the initial value)
×: Bit that cannot be used in this mode (set to the initial value when not used in any mode)
0/1: Set to 0 or 1 depending on the usage of the user

Figure 15-129. Example of Contents of Registers for UART Reception of UART (UART0, UART1) (2/2)

(e) Serial output register m (SOm) … The register that not used in this mode.

	15	14	13	12	11	10	9	8	7	6	5	4	3	2	1	0
SOm	0	0	0	0	0	0	CKOm1 ×	CKOm0 ×	0	0	0	0	0	0	SOm1 ×	SOm0 ×

(f) Serial output enable register m (SOEm) …The register that not used in this mode.

	15	14	13	12	11	10	9	8	7	6	5	4	3	2	1	0
SOEm	0	0	0	0	0	0	0	0	0	0	0	0	0	0	SOEm1 ×	SOEm0 ×

(g) Serial channel start register m (SSm) … Sets only the bits of the target channel to 1.

	15	14	13	12	11	10	9	8	7	6	5	4	3	2	1	0
SSm	0	0	0	0	0	0	0	0	0	0	0	0	0	0	SSm1 0/1	SSm0 ×

Caution For the UART reception, be sure to set the SMRmr register of channel r that is to be paired with channel n.

Remarks 1. m: Unit number (m = 0, 1), n: Channel number (n = 1), mn = 01, 11
r: Channel number (r = n – 1), q: UART number (q = 0, 1)

2. ▒ : Setting disabled (set to the initial value)
×: Bit that cannot be used in this mode (set to the initial value when not used in any mode)
0/1: Set to 0 or 1 depending on the usage of the user

(2) Operation procedure

Figure 15-130. Initial Setting Procedure for UART Reception

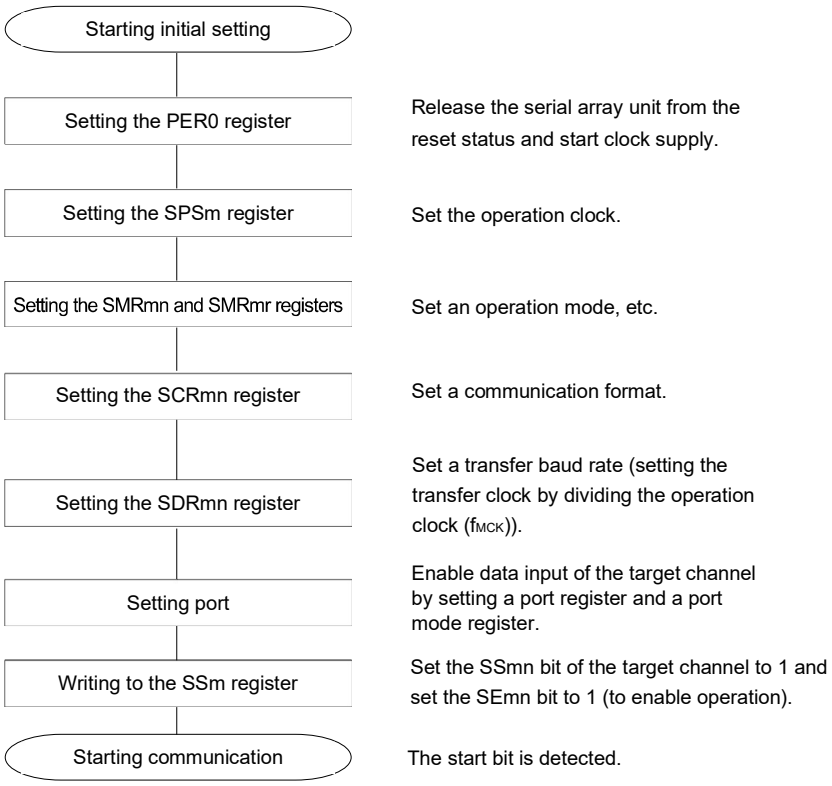

Caution For the UART reception, set the RXEmn bit of SCRmn register to 1, and then be sure to set SSmn to 1 after 4 or more f_{MCK} clocks have elapsed.

Figure 15-131. Procedure for Stopping UART Reception

Remark m: Unit number (m = 0, 1), n: Channel number (n = 1), mn = 00, 10, r: Channel number (r = n – 1)

Figure 15-132. Procedure for Resuming UART Reception

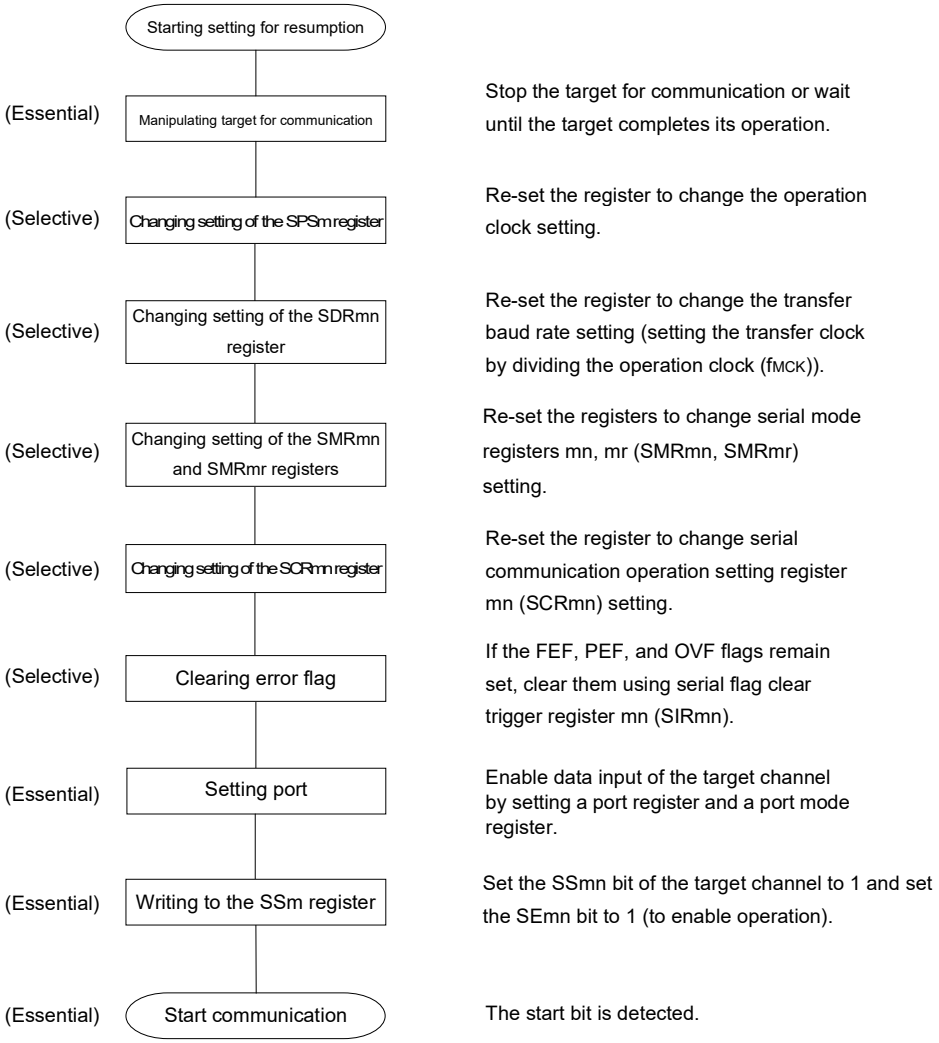

Caution For the UART reception, set the RXEmn bit of SCRmn register to 1, and then be sure to set SSmn to 1 after 4 or more f_{MCK} clocks have elapsed.

Remark m: Unit number (m = 0, 1), n: Channel number (n = 1), mn = 00, 10, r: Channel number (r = n – 1)

(3) Processing flow

Figure 15-133. Timing Chart of UART Reception

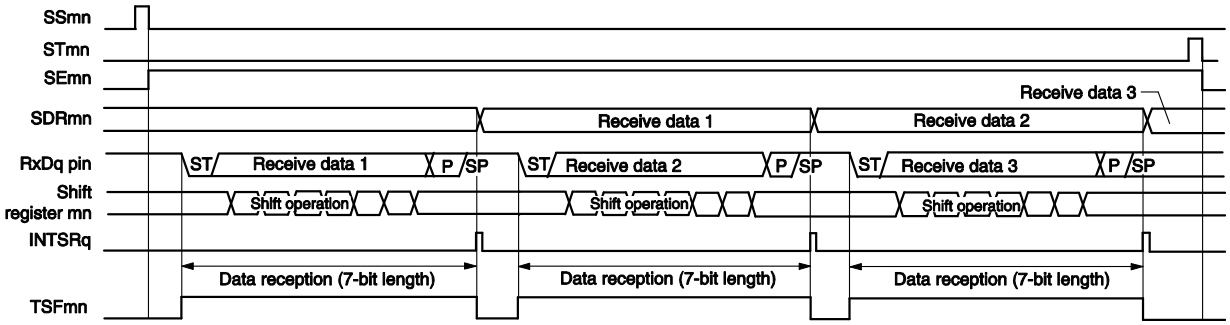

Remark m: Unit number (m = 0, 1), n: Channel number (n = 1), mn = 01, 11, r: Channel number (r = n − 1), q: UART number (q = 0, 1)

Figure 15-134. Flowchart of UART Reception

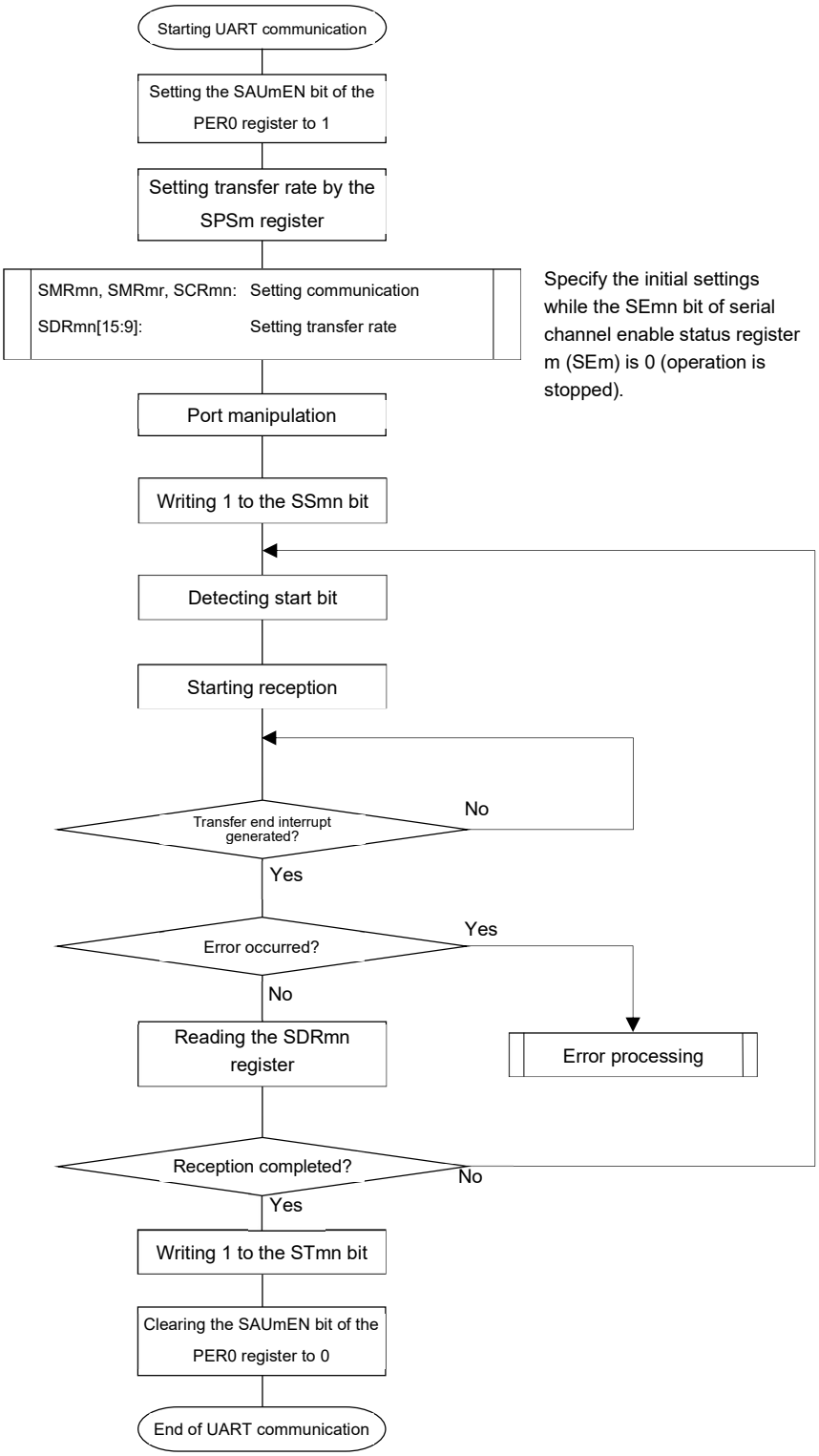

Caution For the UART reception, set the RXEmn bit of SCRmn register to 1, and then be sure to set SSmn to 1 after 4 or more f_{MCK} clocks have elapsed.

Remark m: Unit number (m = 0, 1), n: Channel number (n = 1), mn = 01, 11, r: Channel number (r = n – 1)

15.7.3 Calculating baud rate

(1) Baud rate calculation expression

The baud rate for UART (UART0, UART1) communication can be calculated by the following expressions.

(Baud rate) = {Operation clock (f_{MCK}) frequency of target channel} ÷ (SDRmn[15:9] + 1) ÷ 2 [bps]

Caution Setting serial data register mn (SDRmn) SDRmn[15:9] = (0000000B, 0000001B) is prohibited.

Remarks 1. When UART is used, the value of SDRmn[15:9] is the value of bits 15 to 9 of the SDRmn register (0000010B to 1111111B) and therefore is 2 to 127.

2. m: Unit number (m = 0, 1), n: Channel number (n = 0, 1), mn = 00, 01, 10, 11

The operation clock (f_{MCK}) is determined by serial clock select register m (SPSm) and bit 15 (CKSmn) of serial mode register mn (SMRmn).

Table 15-4. Selection of Operation Clock For UART

SMRmn Register	SPSm Register								Operation Clock (f_{MCK}) Note	
CKSmn	PRS m13	PRS m12	PRS m11	PRS m10	PRS m03	PRS m02	PRS m01	PRS m00		f_{CLK} = 32 MHz
0	X	X	X	X	0	0	0	0	f_{CLK}	32 MHz
	X	X	X	X	0	0	0	1	$f_{CLK}/2$	16 MHz
	X	X	X	X	0	0	1	0	$f_{CLK}/2^2$	8 MHz
	X	X	X	X	0	0	1	1	$f_{CLK}/2^3$	4 MHz
	X	X	X	X	0	1	0	0	$f_{CLK}/2^4$	2 MHz
	X	X	X	X	0	1	0	1	$f_{CLK}/2^5$	1 MHz
	X	X	X	X	0	1	1	0	$f_{CLK}/2^6$	500 kHz
	X	X	X	X	0	1	1	1	$f_{CLK}/2^7$	250 kHz
	X	X	X	X	1	0	0	0	$f_{CLK}/2^8$	125 kHz
	X	X	X	X	1	0	0	1	$f_{CLK}/2^9$	62.5 kHz
	X	X	X	X	1	0	1	0	$f_{CLK}/2^{10}$	31.25 kHz
	X	X	X	X	1	0	1	1	$f_{CLK}/2^{11}$	15.63 kHz
1	0	0	0	0	X	X	X	X	f_{CLK}	32 MHz
	0	0	0	1	X	X	X	X	$f_{CLK}/2$	16 MHz
	0	0	1	0	X	X	X	X	$f_{CLK}/2^2$	8 MHz
	0	0	1	1	X	X	X	X	$f_{CLK}/2^3$	4 MHz
	0	1	0	0	X	X	X	X	$f_{CLK}/2^4$	2 MHz
	0	1	0	1	X	X	X	X	$f_{CLK}/2^5$	1 MHz
	0	1	1	0	X	X	X	X	$f_{CLK}/2^6$	500 kHz
	0	1	1	1	X	X	X	X	$f_{CLK}/2^7$	250 kHz
	1	0	0	0	X	X	X	X	$f_{CLK}/2^8$	125 kHz
	1	0	0	1	X	X	X	X	$f_{CLK}/2^9$	62.5 kHz
	1	0	1	0	X	X	X	X	$f_{CLK}/2^{10}$	31.25 kHz
	1	0	1	1	X	X	X	X	$f_{CLK}/2^{11}$	15.63 kHz
Other than above										Setting prohibited

Note When changing the clock selected for f_{CLK} (by changing the system clock control register (CKC) value), do so after having stopped (serial channel stop register m (STm) = 0003H) the operation of the serial array unit (SAU).

Remarks 1. X: Don't care

2. m: Unit number (m = 0, 1), n: Channel number (n = 0, 1), mn = 00, 01, 10, 11

(2) Baud rate error during transmission

The baud rate error of UART (UART0, UART1) communication during transmission can be calculated by the following expression. Make sure that the baud rate at the transmission side is within the permissible baud rate range at the reception side.

(Baud rate error) = (Calculated baud rate value) ÷ (Target baud rate) × 100 − 100 [%]

Here is an example of setting a UART baud rate at f_{CLK} = 32 MHz.

UART Baud Rate (Target Baud Rate)	f_{CLK} = 32 MHz			
	Operation Clock (f_{MCK})	SDRmn[15:9]	Calculated Baud Rate	Error from Target Baud Rate
300 bps	$f_{CLK}/2^9$	103	300.48 bps	+0.16 %
600 bps	$f_{CLK}/2^8$	103	600.96 bps	+0.16 %
1200 bps	$f_{CLK}/2^7$	103	1201.92 bps	+0.16 %
2400 bps	$f_{CLK}/2^6$	103	2403.85 bps	+0.16 %
4800 bps	$f_{CLK}/2^5$	103	4807.69 bps	+0.16 %
9600 bps	$f_{CLK}/2^4$	103	9615.38 bps	+0.16 %
19200 bps	$f_{CLK}/2^3$	103	19230.8 bps	+0.16 %
31250 bps	$f_{CLK}/2^3$	63	31250.0 bps	±0.0 %
38400 bps	$f_{CLK}/2^2$	103	38461.5 bps	+0.16 %
76800 bps	$f_{CLK}/2$	103	76923.1 bps	+0.16 %
153600 bps	f_{CLK}	103	153846 bps	+0.16 %
312500 bps	f_{CLK}	50	313725.5 bps	+0.39 %

Remark m: Unit number (m = 0, 1), n: Channel number (n = 0), mn = 00, 10

(3) Permissible baud rate range for reception

The permissible baud rate range for reception during UART (UART0, UART1) communication can be calculated by the following expression. Make sure that the baud rate at the transmission side is within the permissible baud rate range at the reception side.

$$\text{(Maximum receivable baud rate)} = \frac{2 \times k \times Nfr}{2 \times k \times Nfr - k + 2} \times Brate$$

$$\text{(Minimum receivable baud rate)} = \frac{2 \times k \times (Nfr - 1)}{2 \times k \times Nfr - k - 2} \times Brate$$

Brate: Calculated baud rate value at the reception side (See **15.7.3 (1) Baud rate calculation expression**.)

k: SDRmn[15:9] + 1

Nfr: 1 data frame length [bits]

= (Start bit) + (Data length) + (Parity bit) + (Stop bit)

Remark m: Unit number (m = 0, 1), n: Channel number (n = 1), mn = 01, 11

Figure 15-135. Permissible Baud Rate Range for Reception (1 Data Frame Length = 11 Bits)

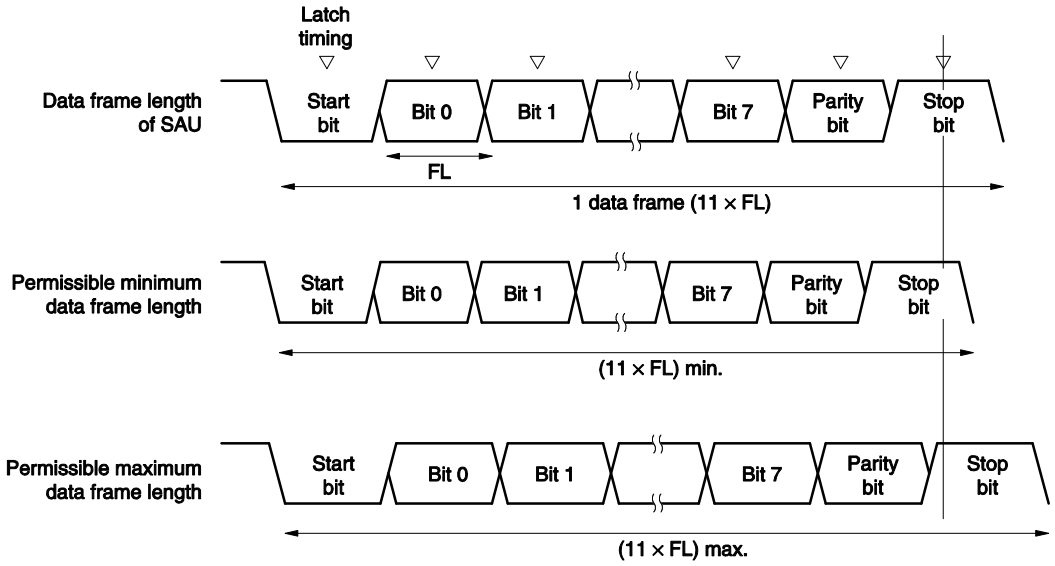

As shown in Figure 15-135, the timing of latching receive data is determined by the division ratio set by bits 15 to 9 of serial data register mn (SDRmn) after the start bit is detected. If the last data (stop bit) is received before this latch timing, the data can be correctly received.

15.7.4 Procedure for processing errors that occurred during UART (UART0, UART1) communication

The procedure for processing errors that occurred during UART (UART0, UART1) communication is described in Figures 15-136 and 15-137.

Figure 15-136. Processing Procedure in Case of Parity Error or Overrun Error

Software Manipulation	Hardware Status	Remark
Reads serial data register mn (SDRmn).	The BFFmn bit of the SSRmn register is set to 0 and channel n is enabled to receive data.	This is to prevent an overrun error if the next reception is completed during error processing.
Reads serial status register mn (SSRmn).		Error type is identified and the read value is used to clear error flag.
Writes 1 to serial flag clear trigger register mn (SIRmn).	Error flag is cleared.	Error can be cleared only during reading, by writing the value read from the SSRmn register to the SIRmn register without modification.

Figure 15-137. Processing Procedure in Case of Framing Error

Software Manipulation	Hardware Status	Remark
Reads serial data register mn (SDRmn).	The BFFmn bit of the SSRmn register is set to 0 and channel n is enabled to receive data.	This is to prevent an overrun error if the next reception is completed during error processing.
Reads serial status register mn (SSRmn).		Error type is identified and the read value is used to clear error flag.
Writes serial flag clear trigger register mn (SIRmn).	Error flag is cleared.	Error can be cleared only during reading, by writing the value read from the SSRmn register to the SIRmn register without modification.
Sets the STmn bit of serial channel stop register m (STm) to 1.	The SEmn bit of serial channel enable status register m (SEm) is set to 0 and channel n stops operating.	
Synchronization with other party of communication		Synchronization with the other party of communication is re-established and communication is resumed because it is considered that a framing error has occurred because the start bit has been shifted.
Sets the SSmn bit of serial channel start register m (SSm) to 1.	The SEmn bit of serial channel enable status register m (SEm) is set to 1 and channel n is enabled to operate.	

Remark m: Unit number (m = 0, 1), n: Channel number (n = 0, 1), mn = 00, 01, 10, 11

15.8 LIN Communication Operation

15.8.1 LIN transmission

Of UART transmission, UART0 support LIN communication.

For LIN transmission, channel 0 of unit 0 is used.

UART	UART0	UART1
Support of LIN communication	Supported	Not supported
Target channel	Channel 0 of SAU0	–
Pins used	TxD0	–
Interrupt	INTST0	–
	Transfer end interrupt (in single-transfer mode) or buffer empty interrupt (in continuous transfer mode) can be selected.	
Error detection flag	None	
Transfer data length	8 bits	
Transfer rate	Max. $f_{MCK}/6$ [bps] (SDR00 [15:9] = 2 or more), Min. $f_{CLK}/(2 \times 2^{11} \times 128)$ [bps] Note	
Data phase	Forward output (default: high level) Reverse output (default: low level)	
Parity bit	No parity bit	
Stop bit	Appending 1 bit	
Data direction	MSB or LSB first	

Note Use this operation within a range that satisfies the conditions above and the AC characteristics in the electrical specifications. The transfer rate of LIN communication is usually set to 2.4, 9.6, or 9.2 kbps.

Remark f_{MCK}: Operation clock frequency of target channel

f_{CLK}: System clock frequency

LIN stands for Local Interconnect Network and is a low-speed (1 to 20 kbps) serial communication protocol designed to reduce the cost of an automobile network.

Communication of LIN is single-master communication and up to 15 slaves can be connected to one master.

The slaves are used to control switches, actuators, and sensors, which are connected to the master via LIN.

Usually, the master is connected to a network such as CAN (Controller Area Network).

A LIN bus is a single-wire bus to which nodes are connected via transceiver conforming to ISO9141.

According to the protocol of LIN, the master transmits a frame by attaching baud rate information to it. A slave receives this frame and corrects a baud rate error from the master. If the baud rate error of a slave is within ±15%, communication can be established.

Figure 15-138 outlines a transmission operation of LIN.

Figure 15-138. Transmission Operation of LIN

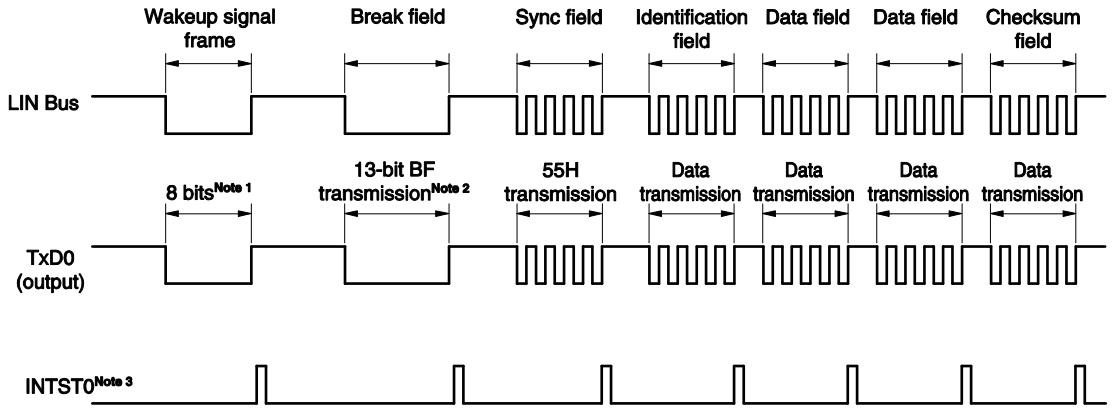

Notes 1. Data of 80H is transmitted.

2. A break field is defined to have a width of 13 bits and output a low level. Where the baud rate for main transfer is N [bps], therefore, the baud rate of the break field is calculated as follows.

(Baud rate of break field) = 9/13 × N

By transmitting data of 00H at this baud rate, a break field is generated.

3. INTST0 is output upon completion of transmission.

Remark The interval between fields is controlled by software.

Figure 15-139. Flowchart for LIN Transmission

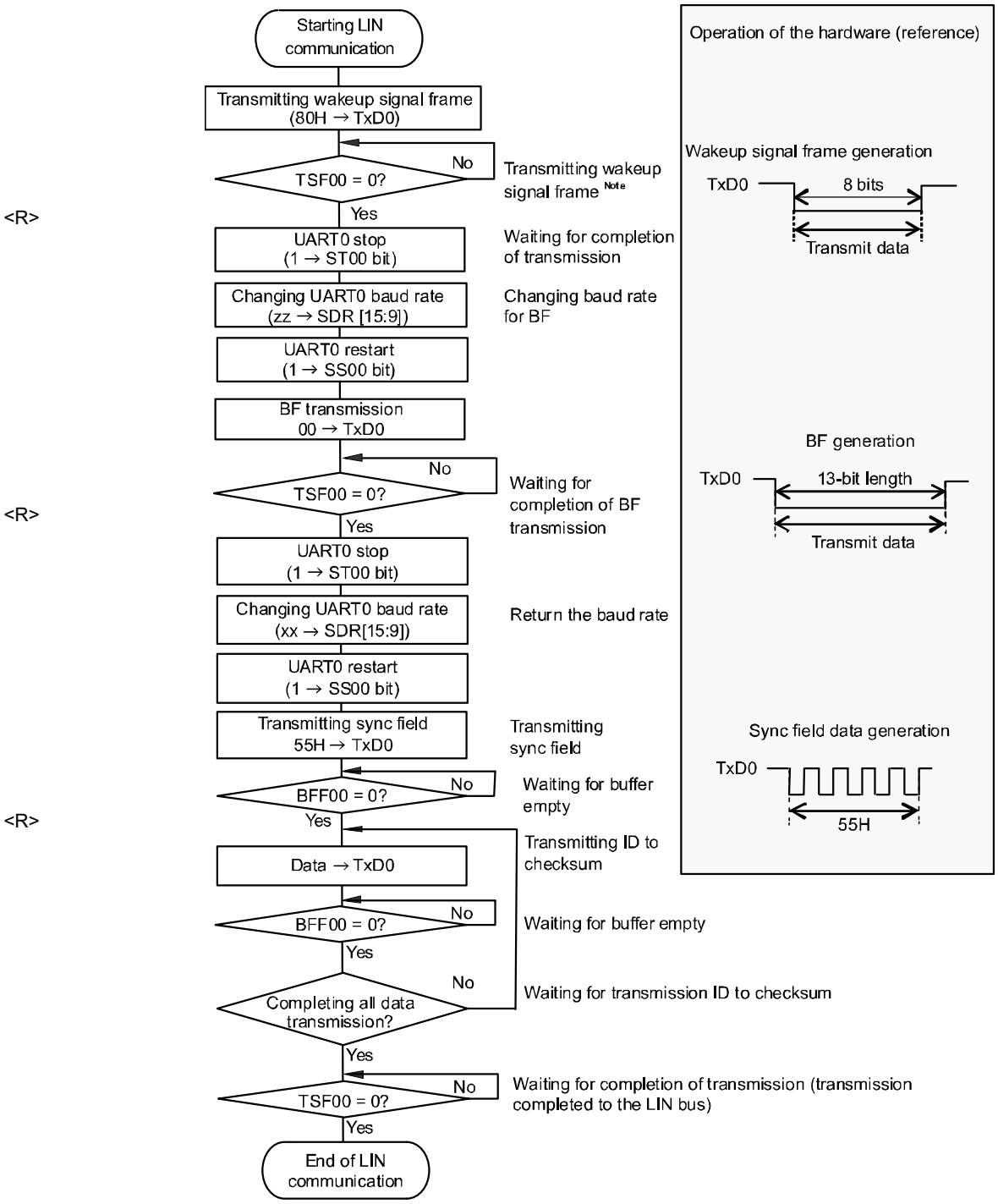

Note When LIN-bus start from sleep status only

Remark Default setting of the UART is complete, and the flow from the transmission enable status.

15.8.2 LIN reception

Of UART reception, UART0 support LIN communication.

For LIN reception, channel 1 of unit 0 is used.

UART	UART0	UART1
Support of LIN communication	Supported	Not supported
Target channel	Channel 1 of SAU0	–
Pins used	RxD0	–
Interrupt	INTSR0	–
	Transfer end interrupt only (Setting the buffer empty interrupt is prohibited.)	
Error detection flag	• Framing error detection flag (FEF01) • Overrun error detection flag (OVF01)	
Transfer data length	8 bits	
Transfer rate	Max. $f_{MCK}/6$ [bps] (SDR01 [15:9] = 2 or more), Min. $f_{CLK}/(2 \times 2^{11} \times 128)$ [bps] Note	
Data phase	Forward output (default: high level) Reverse output (default: low level)	
Parity bit	No parity bit (The parity bit is not checked.)	
Stop bit	The first bit is checked.	
Data direction	MSB or LSB first	

Note Use this operation within a range that satisfies the conditions above and the AC characteristics in the electrical specifications.

Remark f_{MCK}: Operation clock frequency of target channel

f_{CLK}: System clock frequency

Figure 15-140 outlines a reception operation of LIN.

Figure 15-140. Reception Operation of LIN

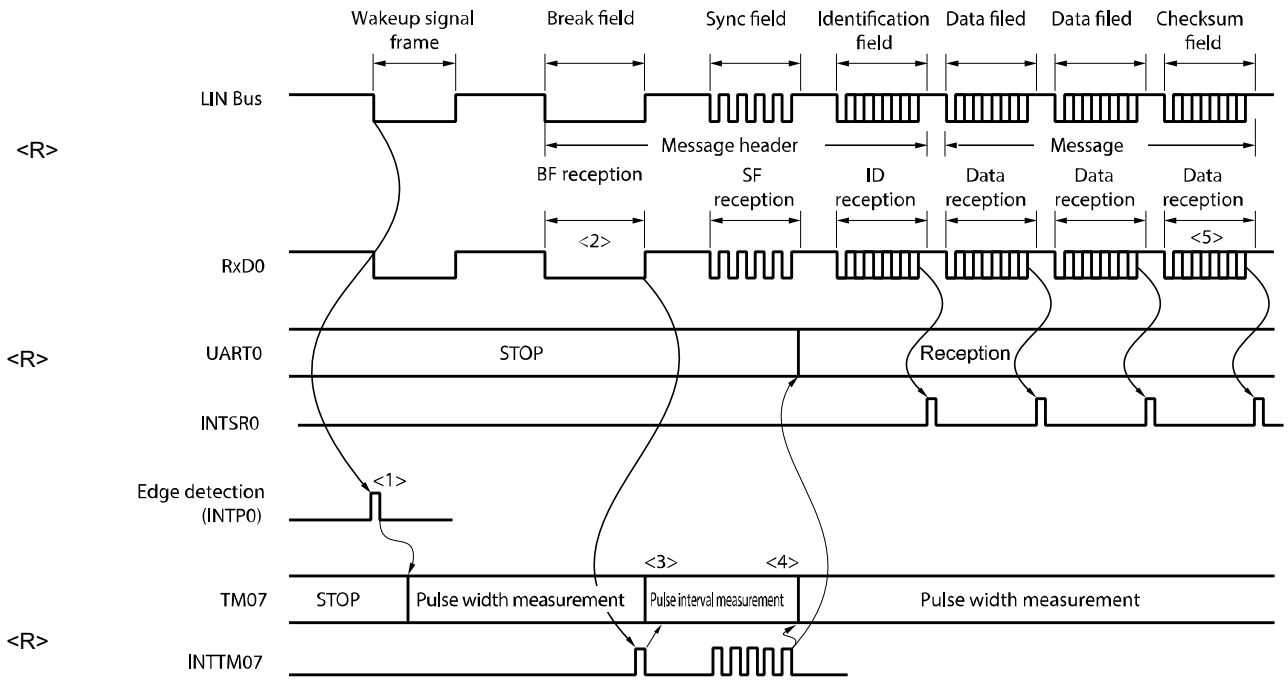

Here is the flow of signal processing.

<1> The wakeup signal is detected by detecting an interrupt edge (INTP0) on a pin. When the wakeup signal is detected, change TM07 to pulse width measurement upon detection of the wakeup signal to measure the low-level width of the BF signal. Then wait for BF signal reception.

<2> TM07 starts measuring the low-level width upon detection of the falling edge of the BF signal, and then captures the data upon detection of the rising edge of the BF signal. The captured data is used to judge whether it is the BF signal.

<3> When the BF signal has been received normally, change TM07 to pulse interval measurement and measure the interval between the falling edges of the RxD0 signal in the Sync field four times.

<4> When BF reception has been correctly completed, start channel 7 of the timer array unit and measure the bit interval (pulse width) of the sync field (see **6.7.4 Operation as input pulse interval measurement**).

<5> Calculate a baud rate error from the bit interval of sync field (SF). Stop UART0 once and adjust (re-set) the baud rate.

<6> The checksum field should be distinguished by software. In addition, processing to initialize UART0 after the checksum field is received and to wait for reception of BF should also be performed by software.

Figure 15-141. Flowchart for LIN Reception

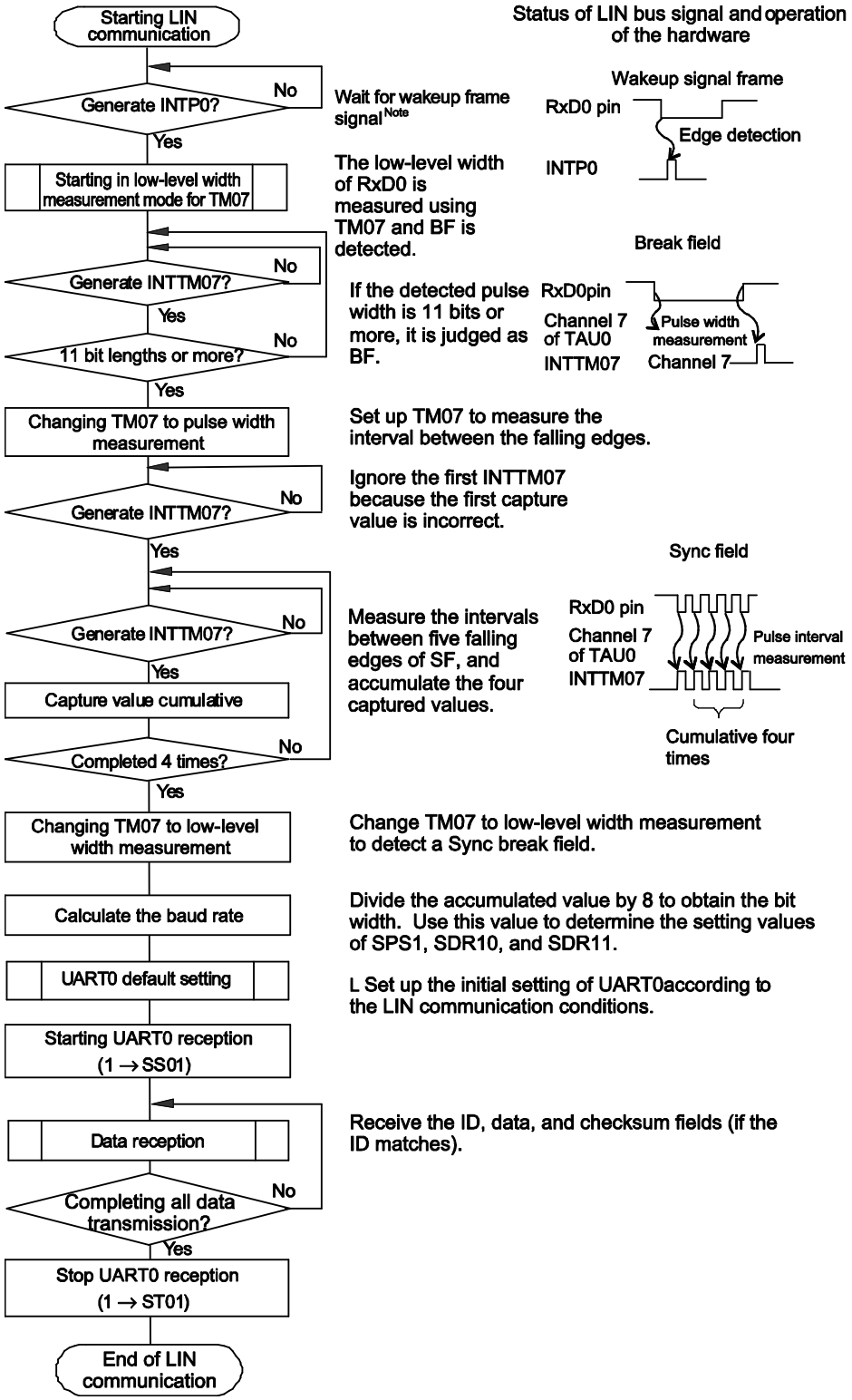

Note Required in the sleep status only.

Caution For the UART reception, set the RXEmn bit of SCRmn register to 1, and then be sure to set SSmn to 1 after 4 or more f_{MCK} clocks have elapsed.

Figure 15-142 shows the configuration of a port that manipulates reception of LIN.

The wakeup signal transmitted from the master of LIN is received by detecting an edge of an external interrupt (INTP0). The length of the sync field transmitted from the master can be measured by using the external event capture operation of the timer array unit 0 to calculate a baud-rate error.

By controlling switch of port input (ISC0/TIS1), the input source of port input (RxD0) for reception can be input to the external interrupt pin (INTP0) and timer array unit 0.

Figure 15-142. Port Configuration for Manipulating Reception of LIN

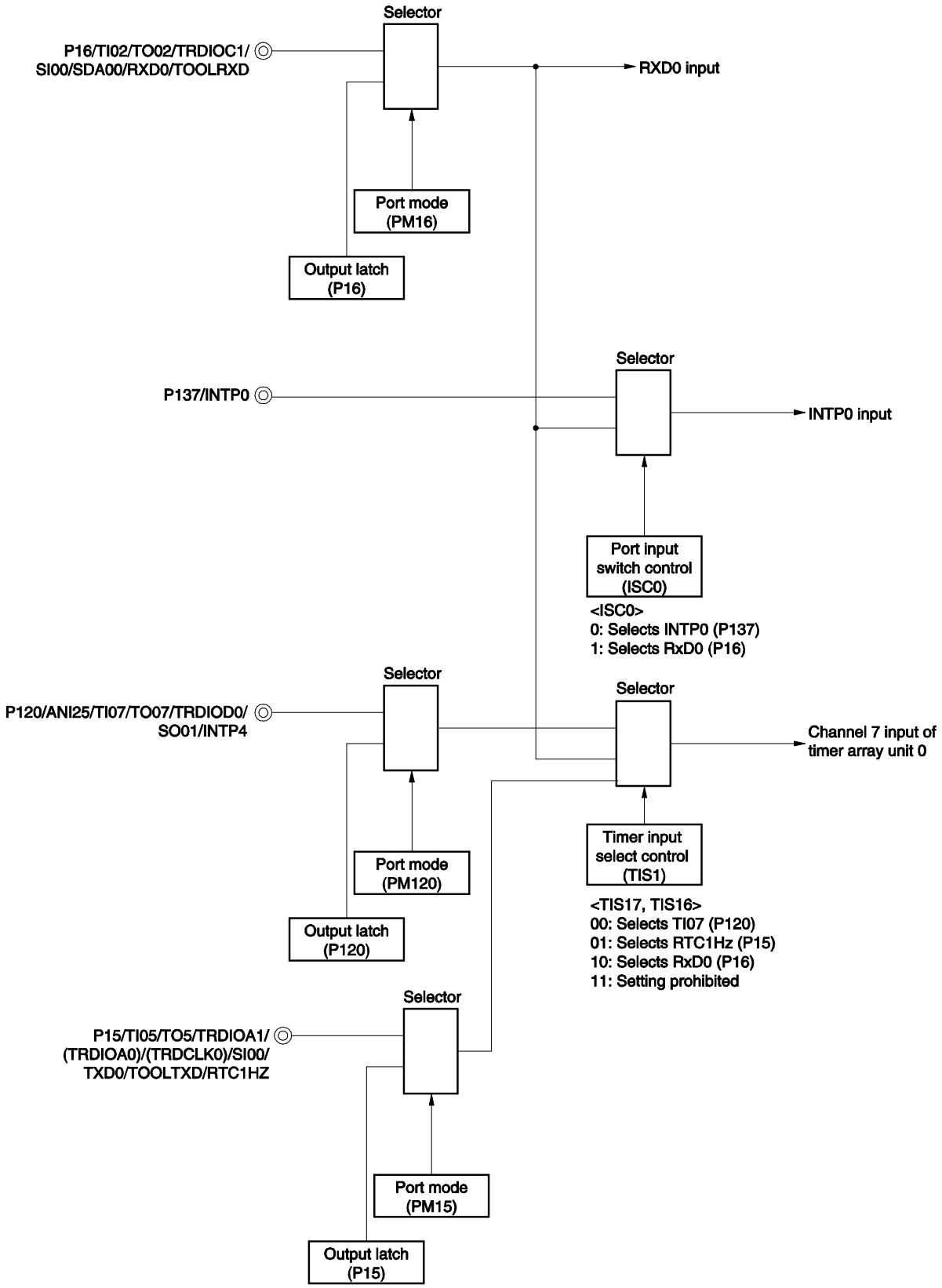

Remark ISC0: Bit 0 of the input switch control register (ISC) (See **Figure 15-18**.)

The peripheral functions used for the LIN communication operation are as follows.

<Peripheral functions used>

- External interrupt (INTP0); Wakeup signal detection
  Usage: To detect an edge of the wakeup signal and the start of communication
- Channel 7 of timer array unit; Baud rate error detection and break field (BF) detection
  Usage: To detect the length of the sync field (SF) and divide it by the number of bits in order to detect an error (The interval of the edge input to RxD0 is measured in the capture mode.)
  To measure a low-level width and determine whether the field is a break field (BF)
- Channels 0 and 1 (UART0) of serial array unit 0 (SAU0)

15.9 Operation of Simplified I²C (IIC00, IIC01, IIC10, IIC11) Communication

This is a clocked communication function to communicate with two or more devices by using two lines: serial clock (SCL) and serial data (SDA). This communication function is designed to execute single communication with devices such as EEPROM, flash memory, and A/D converter, and therefore, can be used only by the master.

Make sure by using software, as well as operating the control registers, that the AC specifications of the start and stop conditions are observed.

[Data transmission/reception]

- Master transmission, master reception (only master function with a single master)
- ACK output function[Note] and ACK detection function
- Data length of 8 bits
  (When an address is transmitted, the address is specified by the higher 7 bits, and the least significant bit is used for R/W control.)
- Manual generation of start condition and stop condition

[Interrupt function]

- Transfer end interrupt

[Error detection flag]

- Overrun error
- Parity error (ACK error)

* [Functions not supported by simplified I²C]

- Slave transmission, slave reception
- Arbitration loss detection function
- Wait detection function

Note When receiving the last data, ACK will not be output if 0 is written to the SOEmn (SOEm register) bit and serial communication data output is stopped. See **15.9.3 (2) Processing flow** for details.

Remark m: Unit number (m = 0, 1), n: Channel number (n = 0, 1), mn = 00, 01, 10, 11

The channel supporting simplified I²C (IIC00, IIC01, IIC10, IIC11) is channels 0 and 1 of SAU0 and channels 0 and 1 of SAU1.

- Group A products

Unit	Channel	Used as CSI	Used as UART	Used as Simplified I²C
0	0	CSI00 (supporting SPI function) Note2	UART0 (supporting LIN-bus)	IIC00
	1	CSI01 (supporting SPI function) Note2		IIC01

- Products of Groups C-1 and D-1

Unit	Channel	Used as CSI	Used as UART	Used as Simplified I²C
0	0	CSI00 (supporting SPI function) Note2	UART0 (supporting LIN-bus)	IIC00
	1	CSI01 (supporting SPI function) Note2		IIC01
1	0	CSI10 (supporting SPI function) Note1, 2	UART1	IIC10
	1	-		-

- Products of Groups B, C-2, D-2, and E

Unit	Channel	Used as CSI	Used as UART	Used as Simplified I²C
0	0	CSI00 (supporting SPI function) Note2	UART0 (supporting LIN-bus)	IIC00
	1	CSI01 (supporting SPI function) Note2		IIC01
1	0	CSI10 (supporting SPI function) Note1, 2	UART1	IIC10
	1	CSI11 (supporting SPI function) Note2		IIC11

Notes 1. 48-pin, 32-pin and 30-pin products do not have $\overline{SSI10}$ pin.

2. Set CKPmn bit of SCRmn register to 1, when SSEmn = 1 (Enables $\overline{SSImn}$ pin input).
(m = 0, 1, n = 0, 1)

Remark Group A: RL78/F13 (LIN incorporated) products with 20, 30, 32, 48, or 64 pins and 16 Kbytes to 64 Kbytes of code flash memory
Group B: RL78/F13 (LIN incorporated) products with 48 or 64 pins and 96 Kbytes to 128 Kbytes of code flash memory or with 80 pins and 64 Kbytes to 128 Kbytes of code flash memory
Group C-1: RL78/F13 (CAN and LIN incorporated) products with 30 or 32 pins
Group C-2: RL78/F13 (CAN and LIN incorporated) products with 48, 64, or 80 pins
Group D-1: RL78/F14 products with 30 or 32 pins
Group D-2: RL78/F14 products with 48, 64, or 80 pins and 48 Kbytes to 96 Kbytes of code flash memory
Group E: RL78/F14 products with 48, 64, or 80 pins and 128 Kbytes to 256 Kbytes of code flash memory or with 100 pins and 64 Kbytes to 256 Kbytes of code flash memory

Simplified I²C (IIC00, IIC01, IIC10, IIC11) performs the following four types of communication operations.

- Address field transmission (See **15.9.1 Address field transmission.**)
- Data transmission (See **15.9.2 Data transmission**.)
- Data reception (See **15.9.3 Data reception**.)
- Stop condition generation (See **15.9.4 Stop condition generation**.)

15.9.1 Address field transmission

Address field transmission is a transmission operation that first executes in I²C communication to identify the target for transfer (slave). After a start condition is generated, an address (7 bits) and a transfer direction (1 bit) are transmitted in one frame.

Simplified I²C	IIC00	IIC01	IIC10	IIC11
Target channel	Channel 0 of SAU0	Channel 1 of SAU0	Channel 0 of SAU1	Channel 1 of SAU1
Pins used	SCL00, SDA00 Note	SCL01, SDA01 Note	SCL10, SDA10 Note	SCL11, SDA11 Note
Interrupt	INTIIC00	INTIIC01	INTIIC10	INTIIC11
	Transfer end interrupt only (Setting the buffer empty interrupt is prohibited.)			
Error detection flag	Parity error detection flag (PEFmn)			
Transfer data length	8 bits (transmitted with specifying the higher 7 bits as address and the least significant bit as R/W control)			
Transfer rate	Max. $f_{MCK}/4$ [Hz] (SDRmn[15:9] = 1 or more) f_{MCK}: Operation clock frequency of target channel However, the following condition must be satisfied in each mode of I²C. • Max. 400 kHz (first mode) • Max. 100 kHz (standard mode)			
Data level	Forward output (default: high level)			
Parity bit	No parity bit			
Stop bit	Appending 1 bit (for ACK reception timing)			
Data direction	MSB first			

Note To perform communication via simplified I²C, set the N-ch open-drain output (EV_{DD0} tolerance) mode (POMxx = 1) for the port output mode registers (POMxx) (see **4.3 Registers Controlling Port Function** for details). When IIC00, IIC01, IIC10, IIC11 communicating with an external device with a different potential, set the N-ch open-drain output (EV_{DD0} tolerance) mode (POMxx = 1) also for the clock input/output pins (SCL00, SCL01, SCL10, SCL11) (see **4.4.4 Connecting to external device with different potential (3 V)** for details).

Remark m: Unit number (m = 0, 1), n: Channel number (n = 0, 1), mn = 00, 01, 10, 11

(1) Register setting

Figure 15-143. Example of Contents of Registers for Address Field Transmission of Simplified I²C (IIC00, IIC01, IIC10, IIC11) (1/2)

(a) Serial mode register mn (SMRmn)

	15	14	13	12	11	10	9	8	7	6	5	4	3	2	1	0
SMRmn	CKSmn 0/1	CCSmn 0	0	0	0	0	0	STSmn 0	0	SISmn0 0	1	0	0	MDmn2 1	MDmn1 0	MDmn0 0

Operation clock (f_{MCK}) of channel n
0: Prescaler output clock CKm0 set by the SPSm register
1: Prescaler output clock CKm1 set by the SPSm register

Operation mode of channel n
0: Transfer end interrupt

(b) Serial communication operation setting register mn (SCRmn)

	15	14	13	12	11	10	9	8	7	6	5	4	3	2	1	0
SCRmn	TXEmn 1	RXEmn 0	DAPmn 0	CKPmn 0	0	0	PTCmn1 0	PTCmn0 0	DIRmn 0	0	SLCmn1 0	SLCmn0 1	DLSmn3 0	DLSmn2 1	DLSmn1 1	DLSmn0 1

Setting of parity bit
00B: No parity

Setting of stop bit
01B: Appending 1 bit (ACK)

(c) Serial data register mn (SDRmn)

(1) When operation is stopped (SEmn = 0)

	15	14	13	12	11	10	9	8	7	6	5	4	3	2	1	0
SDRmn	Baud rate setting							0	0	0	0	0	0	0	0	0

(2) When operation is in progress (SEmn = 1) (Lower 8 bits: SDRrL)

	15	14	13	12	11	10	9	8	7	6	5	4	3	2	1	0
SDRmn	Transmit data setting (address + R/W)															

SDRrL

(d) Serial output register m (SOm) ··· Sets only the bits of the target channel.

	15	14	13	12	11	10	9	8	7	6	5	4	3	2	1	0
SOm	0	0	0	0	0	0	CKOm1 0/1	CKOm0 0/1	0	0	0	0	0	0	SOm1 0/1	SOm0 0/1

Start condition is generated by manipulating the SOmn bit.

(e) Serial output enable register m (SOEm) ··· Sets only the bits of the target channel.

	15	14	13	12	11	10	9	8	7	6	5	4	3	2	1	0
SOEm	0	0	0	0	0	0	0	0	0	0	0	0	0	0	SOEm1 0/1	SOEm0 0/1

SOEmn = 0 until the start condition is generated, and SOEmn = 1 after generation.

Remarks 1. m: Unit number (m = 0, 1), n: Channel number (n = 0, 1), r: IIC number (r = 00, 01, 10, 11), mn = 00, 01, 10, 11

2. ☐: Setting is fixed in the IIC mode, ▒: Setting disabled (set to the initial value)
×: Bit that cannot be used in this mode (set to the initial value when not used in any mode)
0/1: Set to 0 or 1 depending on the usage of the user

Figure 15-143. Example of Contents of Registers for Address Field Transmission of Simplified I²C (IIC00, IIC01, IIC10, IIC11) (2/2)

(f) Serial channel start register m (SSm) … Sets only the bits of the target channel to 1.

	15	14	13	12	11	10	9	8	7	6	5	4	3	2	1	0
SSm	0	0	0	0	0	0	0	0	0	0	0	0	0	0	SSm1 0/1	SSm0 0/1

Remarks 1. m: Unit number (m = 0, 1), n: Channel number (n = 0, 1), r: IIC number (r = 00, 01, 10, 11), mn = 00, 01, 10, 11

2. ☐ : Setting disabled (set to the initial value)
0/1: Set to 0 or 1 depending on the usage of the user

(2) Operation procedure

Figure 15-144. Initial Setting Procedure for Address Field Transmission

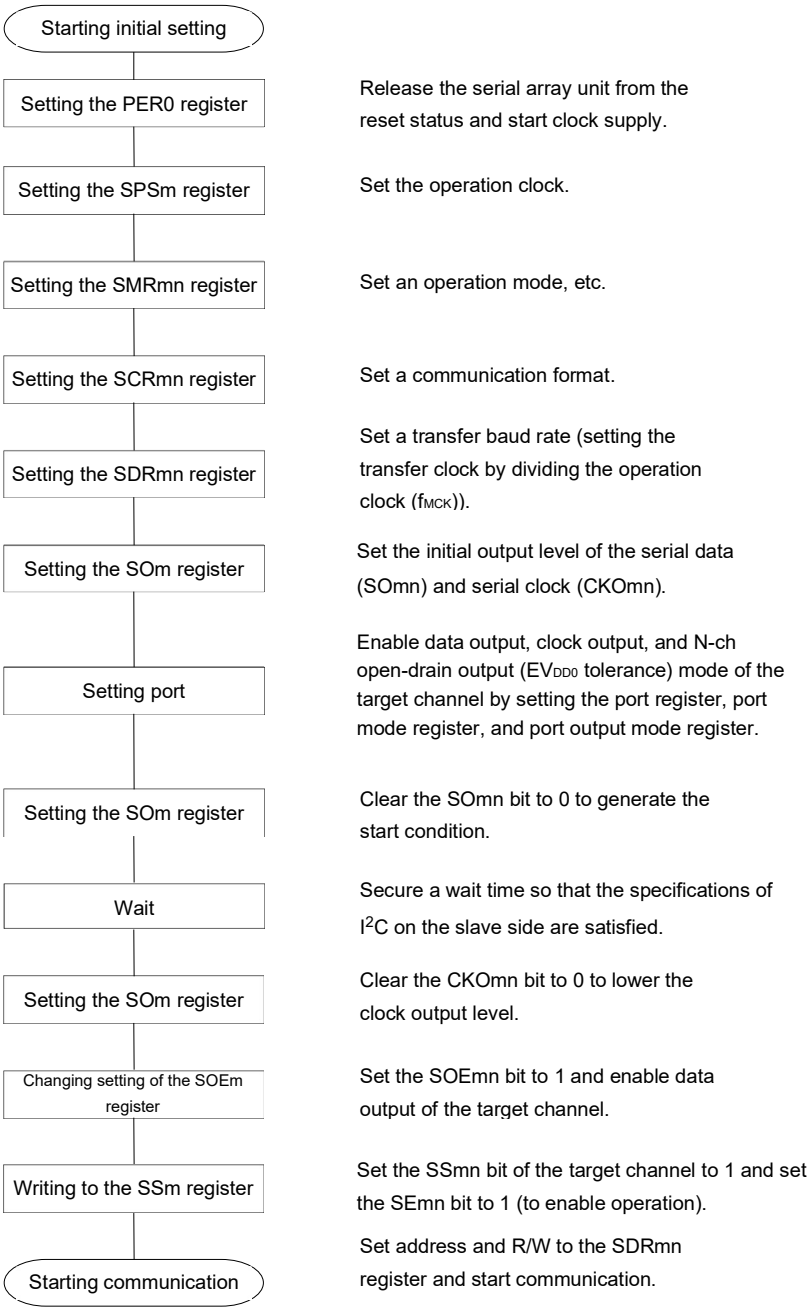

Remark m: Unit number (m = 0, 1), n: Channel number (n = 0, 1), mn = 00, 01, 10, 11

(3) Processing flow

Figure 15-145. Timing Chart of Address Field Transmission

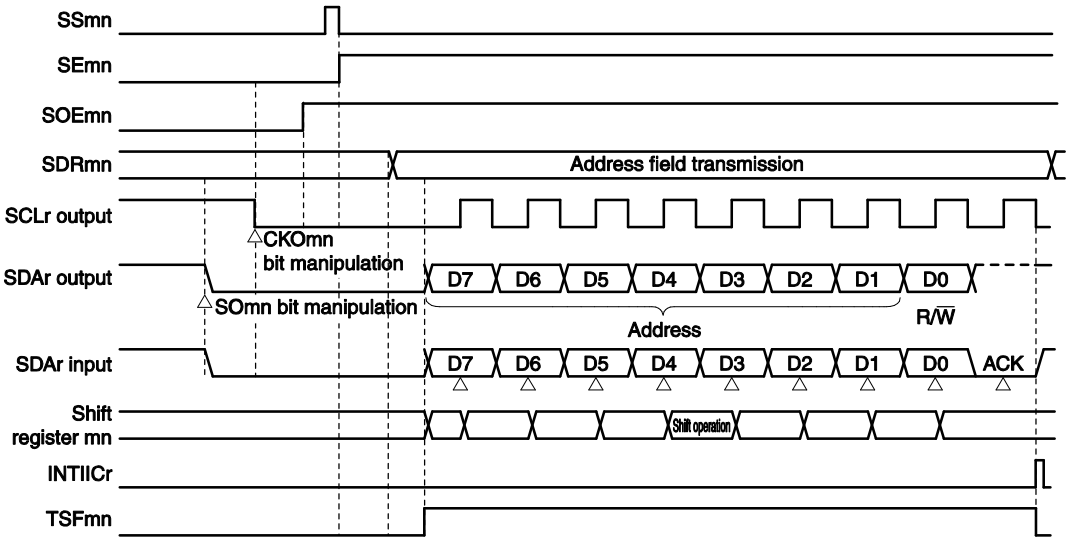

Remark m: Unit number (m = 0, 1), n: Channel number (n = 0, 1), r: IIC number (r = 00, 01, 10, 11), mn = 00, 01, 10, 11

Figure 15-146. Flowchart of Address Field Transmission

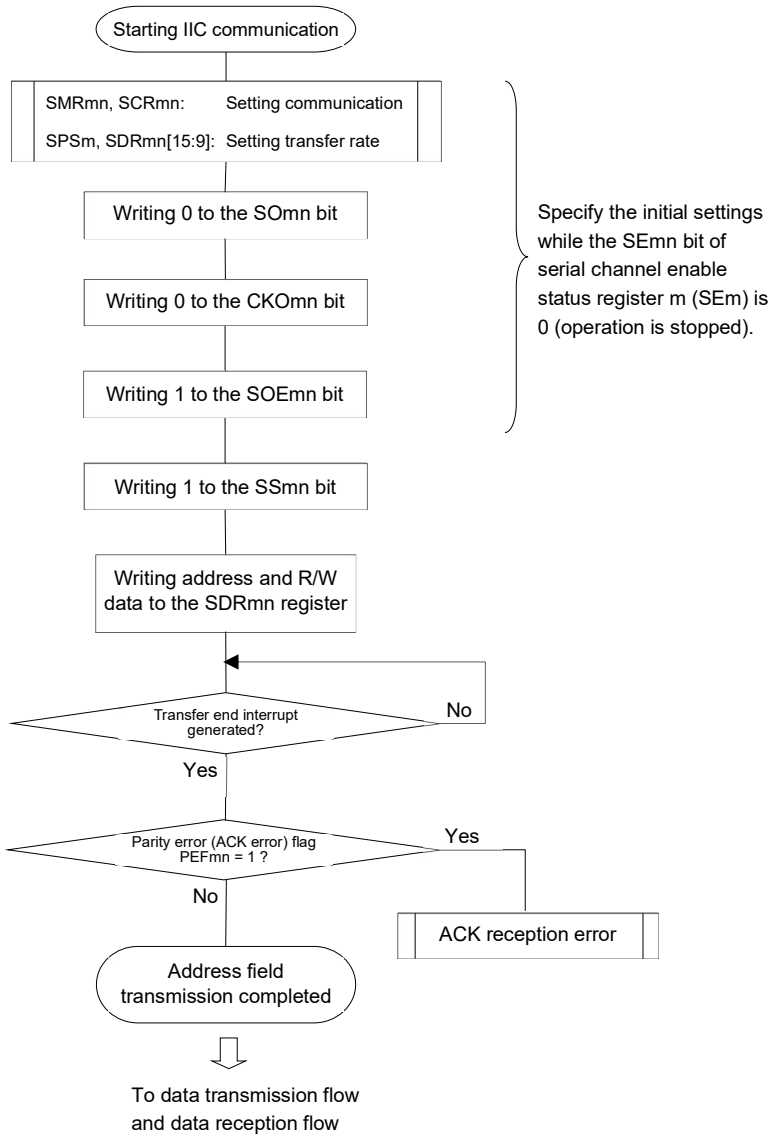

Remark m: Unit number (m = 0, 1), n: Channel number (n = 0, 1), mn = 00, 01, 10, 11

15.9.2 Data transmission

Data transmission is an operation to transmit data to the target for transfer (slave) after transmission of an address field. After all data are transmitted to the slave, a stop condition is generated and the bus is released.

Simplified I^2C	IIC00	IIC01	IIC10	IIC11
Target channel	Channel 0 of SAU0	Channel 1 of SAU0	Channel 0 of SAU1	Channel 1 of SAU1
Pins used	SCL00, SDA00 Note	SCL01, SDA01 Note	SCL10, SDA10 Note	SCL11, SDA11 Note
Interrupt	INTIIC00	INTIIC01	INTIIC10	INTIIC11
	Transfer end interrupt only (Setting the buffer empty interrupt is prohibited.)			
Error detection flag	Parity error detection flag (PEFmn)			
Transfer data length	8 bits			
Transfer rate	Max. $f_{MCK}/4$ [Hz] (SDRmn[15:9] = 1 or more) f_{MCK}: Operation clock frequency of target channel However, the following condition must be satisfied in each mode of I^2C. • Max. 400 kHz (first mode) • Max. 100 kHz (standard mode)			
Data level	Forward output (default: high level)			
Parity bit	No parity bit			
Stop bit	Appending 1 bit (for ACK reception timing)			
Data direction	MSB first			

Note To perform communication via simplified I^2C, set the N-ch open-drain output (EV_{DD0} tolerance) mode (POMxx = 1) for the port output mode registers (POMxx) (see **4.3 Registers Controlling Port Function** for details). When IIC00, IIC01, IIC10, IIC11 communicating with an external device with a different potential, set the N-ch open-drain output (EV_{DD0} tolerance) mode (POMxx = 1) also for the clock input/output pins (SCL00, SCL01, SCL10, SCL11) (see **4.4.4 Connecting to external device with different potential (3 V)** for details).

Remark m: Unit number (m = 0, 1), n: Channel number (n = 0, 1), mn = 00, 01, 10, 11

(1) Register setting

Figure 15-147. Example of Contents of Registers for Data Transmission of Simplified I²C (IIC00, IIC01, IIC10, IIC11) (1/2)

(a) Serial mode register mn (SMRmn) … Do not manipulate this register during data transmission/reception.

	15	14	13	12	11	10	9	8	7	6	5	4	3	2	1	0
SMRmn	CKSmn 0/1	CCSmn 0	0	0	0	0	0	STSmn 0	0	SISmn0 0	1	0	0	MDmn2 1	MDmn1 0	MDmn0 0

(b) Serial communication operation setting register mn (SCRmn) … Do not manipulate the bits of this register, except the TXEmn and RXEmn bits, during data transmission/reception.

	15	14	13	12	11	10	9	8	7	6	5	4	3	2	1	0
SCRmn	TXEmn 1	RXEmn 0	DAPmn 0	CKPmn 0	0	0	PTCmn1 0	PTCmn0 0	DIRmn 0	0	SLCmn1 0	SLCmn0 1	DLSmn3 0	DLSmn2 1	DLSmn1 1	DLSmn0 1

(c) Serial data register mn (SDRmn)

(1) When operation is stopped (SEmn = 0)

	15	14	13	12	11	10	9	8	7	6	5	4	3	2	1	0
SDRmn	Baud rate setting Note 1							0	0	0	0	0	0	0	0	0

(2) When operation is in progress (SEmn = 1) (Lower 8 bits: SDRrL)

	15	14	13	12	11	10	9	8	7	6	5	4	3	2	1	0
SDRmn	Transmit data setting															

SDRrL

(d) Serial output register m (SOm) … Do not manipulate this register during data transmission/reception.

	15	14	13	12	11	10	9	8	7	6	5	4	3	2	1	0
SOm	0	0	0	0	0	0	CKOm1 0/1 Note 2	CKOm0 0/1 Note 2	0	0	0	0	0	0	SOm1 0/1 Note 2	SOm0 0/1 Note 2

(e) Serial output enable register m (SOEm) … Do not manipulate this register during data transmission/reception.

	15	14	13	12	11	10	9	8	7	6	5	4	3	2	1	0
SOEm	0	0	0	0	0	0	0	0	0	0	0	0	0	0	SOEm1 0/1	SOEm0 0/1

Notes 1. Setting these bits is unnecessary because they are set for transmission of an address field.

2. The value varies depending on the communication data during communication operation.

Remarks 1. m: Unit number (m = 0, 1), n: Channel number (n = 0, 1), r: IIC number (r = 00, 01, 10, 11), mn = 00, 01, 10, 11

2. ☐ : Setting is fixed in the IIC mode, ▒ : Setting disabled (set to the initial value)

×: Bit that cannot be used in this mode (set to the initial value when not used in any mode)

0/1: Set to 0 or 1 depending on the usage of the user

Figure 15-147. Example of Contents of Registers for Data Transmission of Simplified I²C (IIC00, IIC01, IIC10, IIC11) (2/2)

(f) Serial channel start register m (SSm) … Do not manipulate this register during data transmission/reception.

	15	14	13	12	11	10	9	8	7	6	5	4	3	2	1	0
SSm	0	0	0	0	0	0	0	0	0	0	0	0	0	0	SSm1 0/1	SSm0 0/1

Remarks 1. m: Unit number (m = 0, 1), n: Channel number (n = 0, 1), r: IIC number (r = 00, 01, 10, 11), mn = 00, 01, 10, 11

2. ▒ : Setting disabled (set to the initial value)

0/1: Set to 0 or 1 depending on the usage of the user

(2) Processing flow

Figure 15-148. Timing Chart of Data Transmission

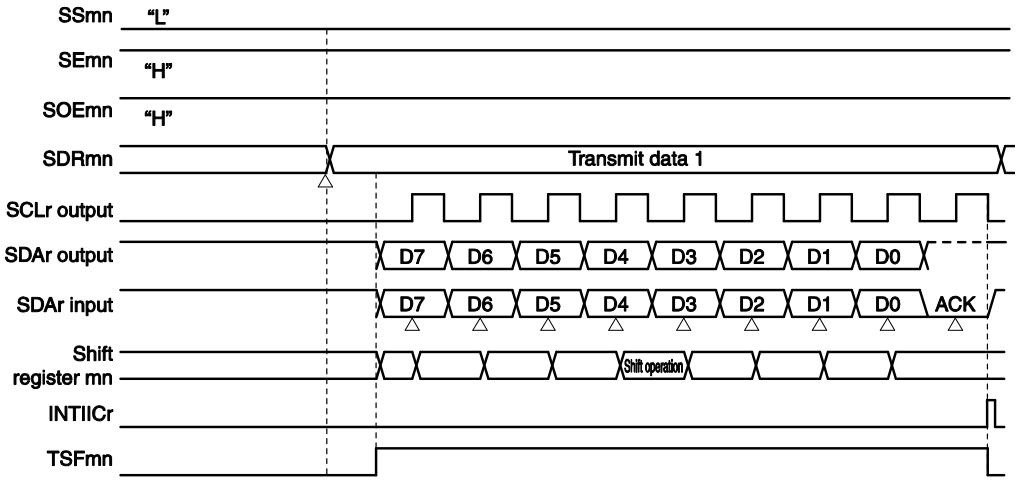

Remark m: Unit number (m = 0, 1), n: Channel number (n = 0, 1), r: IIC number (r = 00, 01, 10, 11), mn = 00, 01, 10, 11

Figure 15-149. Flowchart of Data Transmission

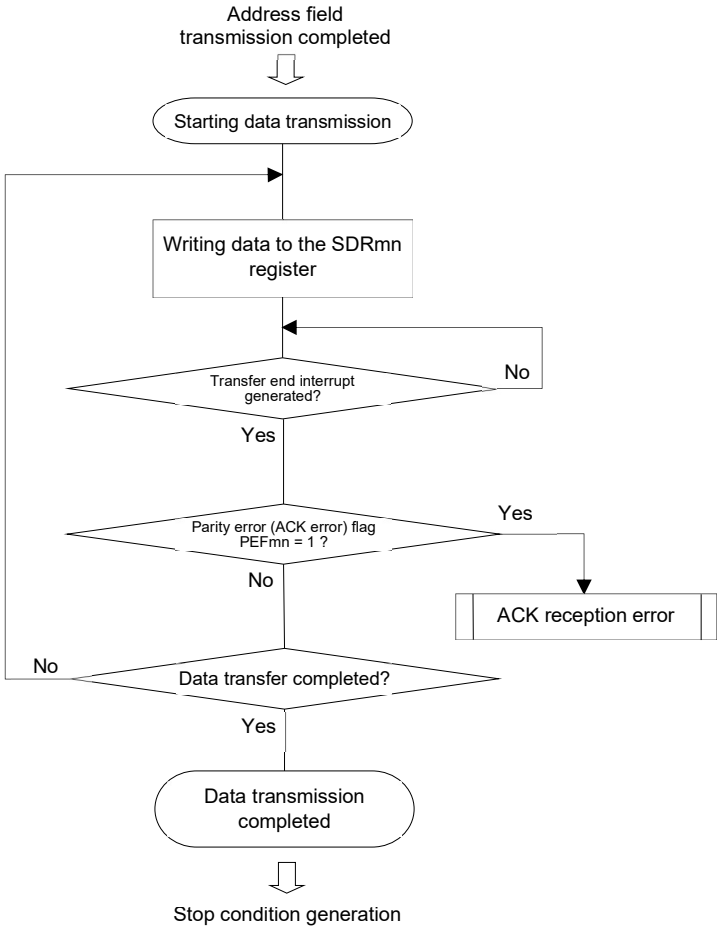

Remark m: Unit number (m = 0, 1), n: Channel number (n = 0, 1), r: IIC number (r = 00, 01, 10, 11), mn = 00, 01, 10, 11

15.9.3 Data reception

Data reception is an operation to receive data to the target for transfer (slave) after transmission of an address field. After all data are received to the slave, a stop condition is generated and the bus is released.

Simplified I²C	IIC00	IIC01	IIC10	IIC11
Target channel	Channel 0 of SAU0	Channel 1 of SAU0	Channel 0 of SAU1	Channel 1 of SAU1
Pins used	SCL00, SDA00 Note	SCL01, SDA01 Note	SCL10, SDA10 Note	SCL11, SDA11 Note
Interrupt	INTIIC00	INTIIC01	INTIIC10	INTIIC11
	Transfer end interrupt only (Setting the buffer empty interrupt is prohibited.)			
Error detection flag	Overrun error detection flag (OVFmn) only			
Transfer data length	8 bits			
Transfer rate	Max. $f_{MCK}/4$ [Hz] (SDRmn[15:9] = 1 or more) f_{MCK}: Operation clock frequency of target channel However, the following condition must be satisfied in each mode of I²C. • Max. 400 kHz (first mode) • Max. 100 kHz (standard mode)			
Data level	Forward output (default: high level)			
Parity bit	No parity bit			
Stop bit	Appending 1 bit (ACK transmission)			
Data direction	MSB first			

Note To perform communication via simplified I²C, set the N-ch open-drain output (EV_{DD0} tolerance) mode (POMxx = 1) for the port output mode registers (POMxx) (see **4.3 Registers Controlling Port Function** for details). When IIC00, IIC01, IIC10, IIC11 communicating with an external device with a different potential, set the N-ch open-drain output (EV_{DD0} tolerance) mode (POMxx = 1) also for the clock input/output pins (SCL00, SCL01, SCL10, SCL11) (see **4.4.4 Connecting to external device with different potential (3 V)** for details).

Remark m: Unit number (m = 0, 1), n: Channel number (n = 0, 1), mn = 00, 01, 10, 11

(1) Register setting

Figure 15-150. Example of Contents of Registers for Data Reception of Simplified I²C (IIC00, IIC01, IIC10, IIC11) (1/2)

(a) Serial mode register mn (SMRmn) … Do not manipulate this register during data transmission/reception.

	15	14	13	12	11	10	9	8	7	6	5	4	3	2	1	0
SMRmn	CKSmn 0/1	CCSmn 0	0	0	0	0	0	STSmn 0	0	SISmn0 0	1	0	0	MDmn2 1	MDmn1 0	MDmn0 0

(b) Serial communication operation setting register mn (SCRmn) … Do not manipulate the bits of this register, except the TXEmn and RXEmn bits, during data transmission/reception.

	15	14	13	12	11	10	9	8	7	6	5	4	3	2	1	0
SCRmn	TXEmn 0	RXEmn 1	DAPmn 0	CKPmn 0	0	0	PTCmn1 0	PTCmn0 0	DIRmn 0	0	SLCmn1 0	SLCmn0 1	DLSmn3 0	DLSmn2 1	DLSmn1 1	DLSmn0 1

(c) Serial data register mn (SDRmn)

(1) When operation is stopped (SEmn = 0)

	15	14	13	12	11	10	9	8	7	6	5	4	3	2	1	0
SDRmn	Baud rate setting Note 1							0	0	0	0	0	0	0	0	0

(2) When operation is in progress (SEmn = 1) (Lower 8 bits: SDRrL)

	15	14	13	12	11	10	9	8	7	6	5	4	3	2	1	0
SDRmn	Dummy transmit data setting (FFH)															

(d) Serial output register m (SOm) … Do not manipulate this register during data transmission/reception.

	15	14	13	12	11	10	9	8	7	6	5	4	3	2	1	0
SOm	0	0	0	0	0	0	CKOm1 0/1 Note 2	CKOm0 0/1 Note 2	0	0	0	0	0	0	SOm1 0/1 Note 2	SOm0 0/1 Note 2

(e) Serial output enable register m (SOEm) … Do not manipulate this register during data transmission/reception.

	15	14	13	12	11	10	9	8	7	6	5	4	3	2	1	0
SOEm	0	0	0	0	0	0	0	0	0	0	0	0	0	0	SOEm1 0/1	SOEm0 0/1

Notes 1. Setting these bits is unnecessary because they are set for transmission of an address field.

2. The value varies depending on the communication data during communication operation.

Remarks 1. m: Unit number (m = 0, 1), n: Channel number (n = 0, 1), r: IIC number (r = 00, 01, 10, 11), mn = 00, 01, 10, 11

2. □: Setting is fixed in the IIC mode, ▒: Setting disabled (set to the initial value)

×: Bit that cannot be used in this mode (set to the initial value when not used in any mode)

0/1: Set to 0 or 1 depending on the usage of the user

Figure 15-150. Example of Contents of Registers for Data Reception of Simplified I²C (IIC00, IIC01, IIC10, IIC11) (2/2)

(f) Serial channel start register m (SSm) … Do not manipulate this register during data transmission/reception.

	15	14	13	12	11	10	9	8	7	6	5	4	3	2	1	0
SSm	0	0	0	0	0	0	0	0	0	0	0	0	0	0	SSm1 0/1	SSm0 0/1

Remarks 1. m: Unit number (m = 0, 1), n: Channel number (n = 0, 1), r: IIC number (r = 00, 01, 10, 11), mn = 00, 01, 10, 11

2. ▒: Setting disabled (set to the initial value)

0/1: Set to 0 or 1 depending on the usage of the user

(2) Processing flow

Figure 15-151. Timing Chart of Data Reception

(a) When starting data reception

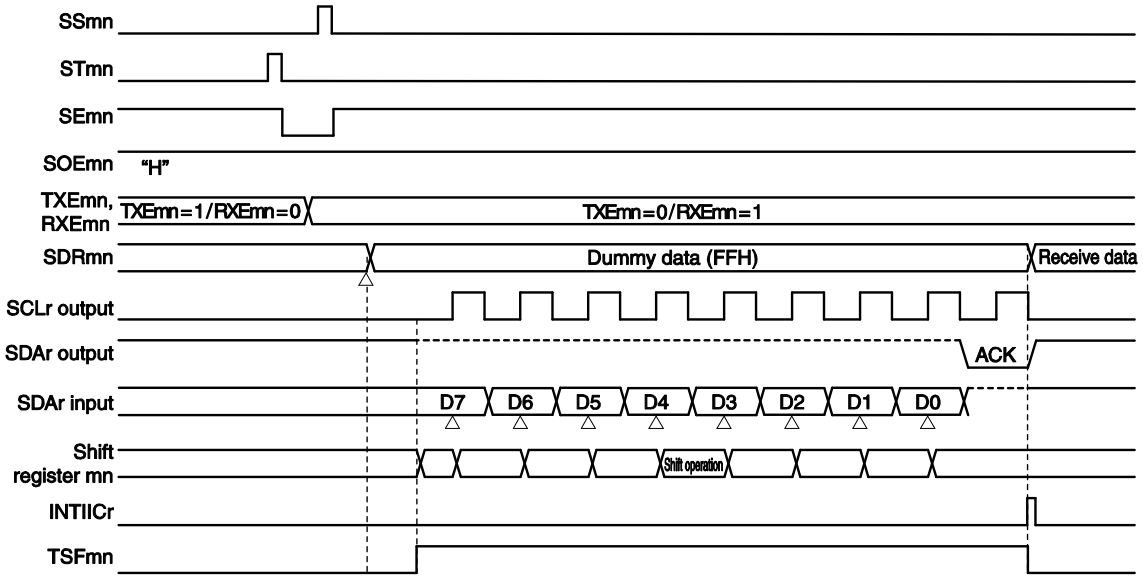

(b) When receiving last data

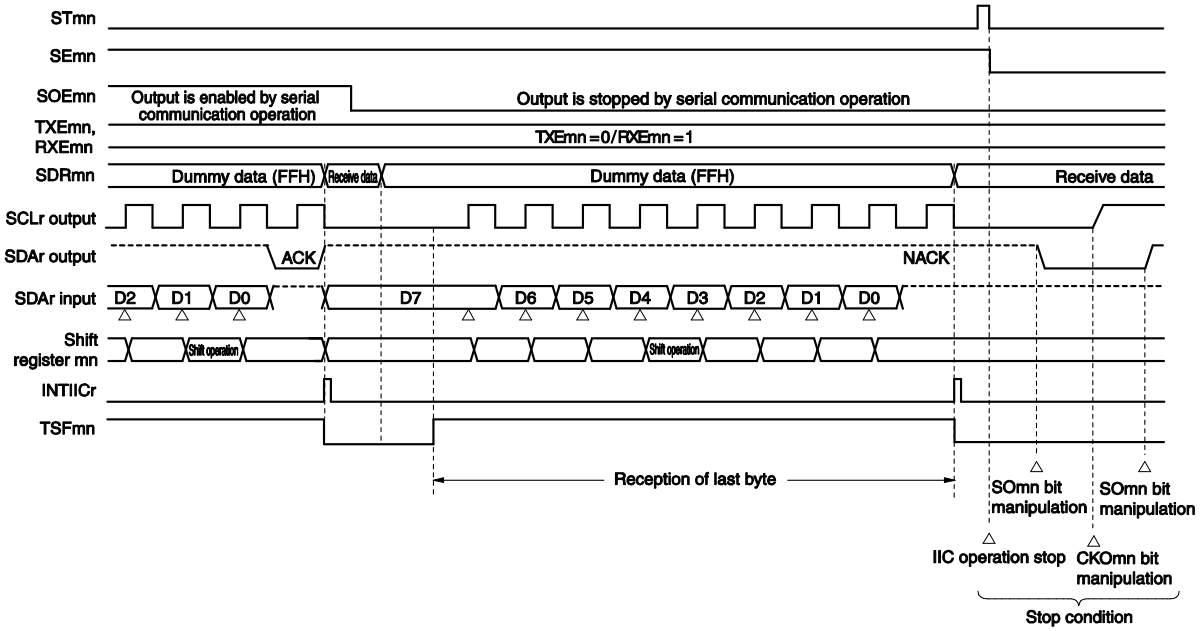

Remark m: Unit number (m = 0, 1), n: Channel number (n = 0, 1), r: IIC number (r = 00, 01, 10, 11)
mn = 00, 01, 10, 11

Figure 15-152. Flowchart of Data Reception

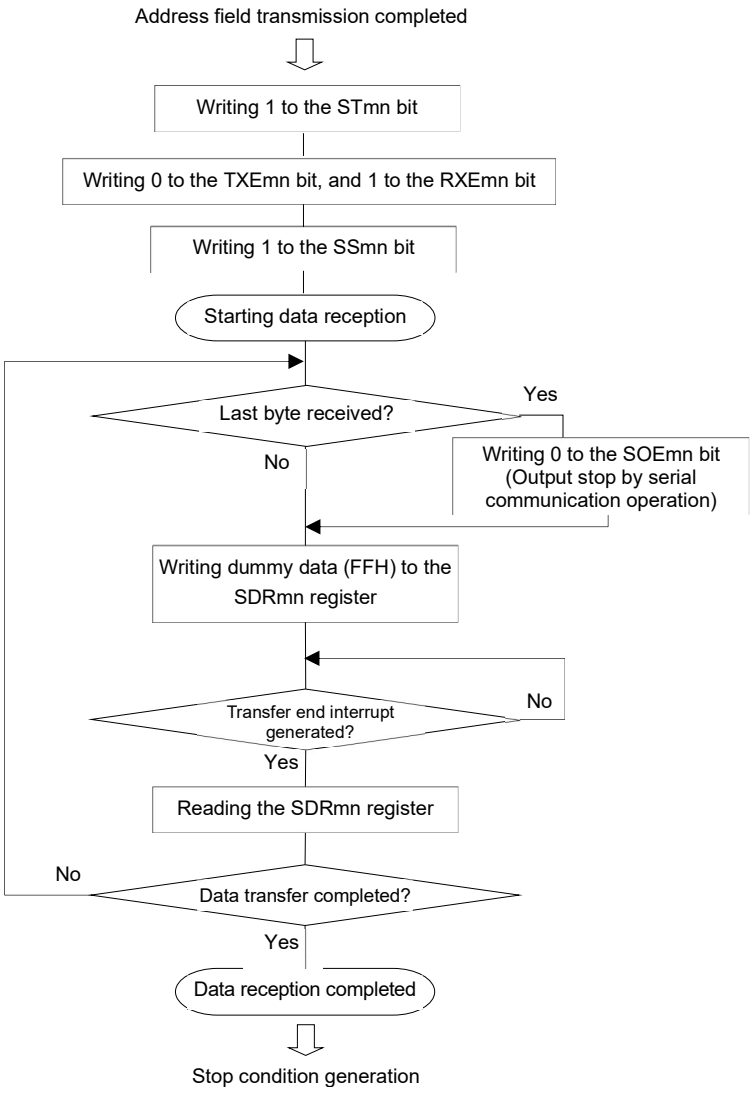

Caution **ACK is not output when the last data is received (NACK). Communication is then completed by setting 1 to the STmn bit of serial channel stop register m (STm) to stop operation and generating a stop condition.**

Remark m: Unit number (m = 0, 1), n: Channel number (n = 0, 1), mn = 00, 01, 10, 11

15.9.4 Stop condition generation

After all data are transmitted to or received from the target slave, a stop condition is generated and the bus is released.

(1) Processing flow

Figure 15-153. Timing Chart of Stop Condition Generation

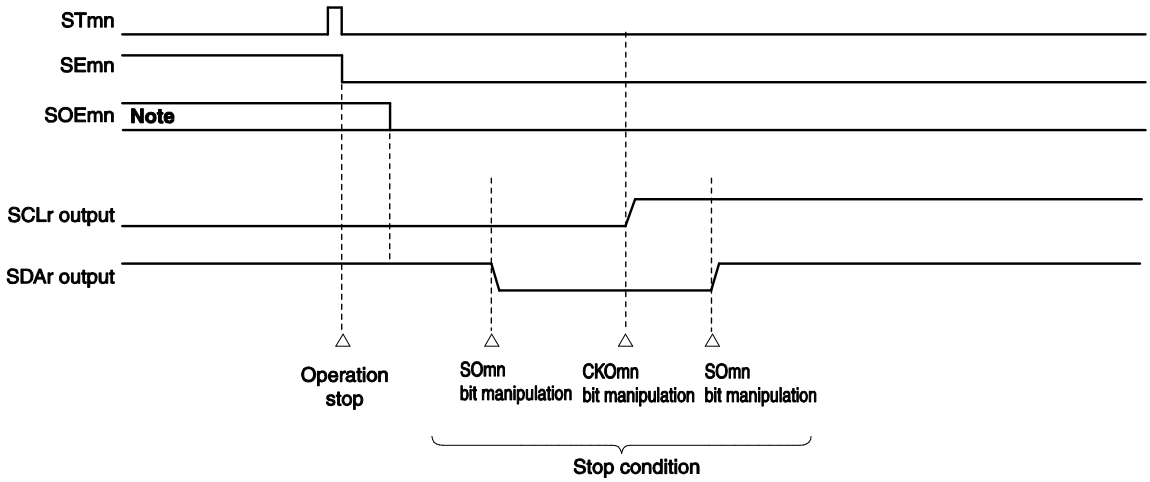

Note During a receive operation, the SOEmn bit of serial output enable register m (SOEm) is cleared to 0 before receiving the last data.

Remark m: Unit number (m = 0, 1), n: Channel number (n = 0, 1), r: IIC number (r = 00, 01, 10, 11), mn = 00, 01, 10, 11

Figure 15-154. Flowchart of Stop Condition Generation

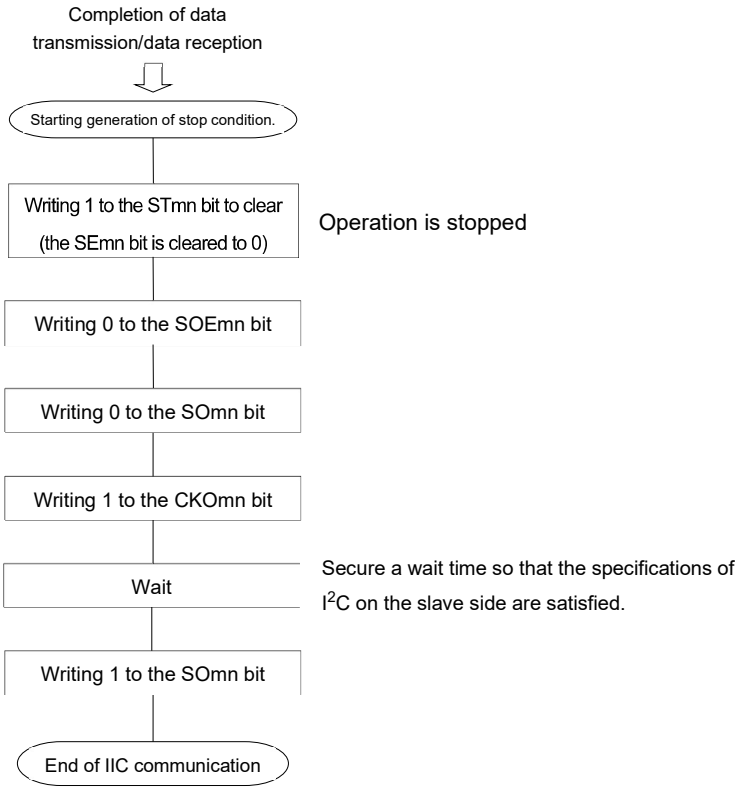

Remark m: Unit number (m = 0, 1), n: Channel number (n = 0, 1), mn = 00, 01, 10, 11

15.9.5 Calculating transfer rate

<R> The transfer rate for simplified I²C (IIC00, IIC01, IIC10, IIC11) communication can be calculated by the following expressions.

(Transfer rate) = {Operation clock (f_{MCK}) frequency of target channel} ÷ (SDRmn[15:9] + 1) ÷ 2

Caution Setting SDRmn[15:9] = 0000000B is prohibited. Setting SDRmn[15:9] = 0000001B or more.

Remarks 1. The value of SDRmn[15:9] is the value of bits 15 to 9 of the SDRmn register (0000001B to 1111111B) and therefore is 1 to 127.

2. m: Unit number (m = 0, 1), n: Channel number (n = 0, 1), mn = 00, 01, 10, 11

The operation clock (f_{MCK}) is determined by serial clock select register m (SPSm) and bit 15 (CKSmn) of serial mode register mn (SMRmn).

Table 15-5. Selection of Operation Clock For Simplified I²C

SMRmn Register	SPSm Register								Operation Clock (f_{MCK}) Note	
CKSmn	PRS m13	PRS m12	PRS m11	PRS m10	PRS m03	PRS m02	PRS m01	PRS m00		f_{CLK} = 32 MHz
0	X	X	X	X	0	0	0	0	f_{CLK}	32 MHz
	X	X	X	X	0	0	0	1	$f_{CLK}/2$	16 MHz
	X	X	X	X	0	0	1	0	$f_{CLK}/2^2$	8 MHz
	X	X	X	X	0	0	1	1	$f_{CLK}/2^3$	4 MHz
	X	X	X	X	0	1	0	0	$f_{CLK}/2^4$	2 MHz
	X	X	X	X	0	1	0	1	$f_{CLK}/2^5$	1 MHz
	X	X	X	X	0	1	1	0	$f_{CLK}/2^6$	500 kHz
	X	X	X	X	0	1	1	1	$f_{CLK}/2^7$	250 kHz
	X	X	X	X	1	0	0	0	$f_{CLK}/2^8$	125 kHz
	X	X	X	X	1	0	0	1	$f_{CLK}/2^9$	62.5 kHz
	X	X	X	X	1	0	1	0	$f_{CLK}/2^{10}$	31.25 kHz
	X	X	X	X	1	0	1	1	$f_{CLK}/2^{11}$	15.63 kHz
1	0	0	0	0	X	X	X	X	f_{CLK}	32 MHz
	0	0	0	1	X	X	X	X	$f_{CLK}/2$	16 MHz
	0	0	1	0	X	X	X	X	$f_{CLK}/2^2$	8 MHz
	0	0	1	1	X	X	X	X	$f_{CLK}/2^3$	4 MHz
	0	1	0	0	X	X	X	X	$f_{CLK}/2^4$	2 MHz
	0	1	0	1	X	X	X	X	$f_{CLK}/2^5$	1 MHz
	0	1	1	0	X	X	X	X	$f_{CLK}/2^6$	500 kHz
	0	1	1	1	X	X	X	X	$f_{CLK}/2^7$	250 kHz
	1	0	0	0	X	X	X	X	$f_{CLK}/2^8$	125 kHz
	1	0	0	1	X	X	X	X	$f_{CLK}/2^9$	62.5 kHz
	1	0	1	0	X	X	X	X	$f_{CLK}/2^{10}$	31.25 kHz
	1	0	1	1	X	X	X	X	$f_{CLK}/2^{11}$	15.63 kHz
Other than above										Setting prohibited

Note When changing the clock selected for f_{CLK} (by changing the system clock control register (CKC) value), do so after having stopped (serial channel stop register m (STm) = 0003H) the operation of the serial array unit (SAU).

Remarks 1. X: Don't care

2. m: Unit number (m = 0, 1), n: Channel number (n = 0, 1), mn = 00, 01, 10, 11

Here is an example of setting an I²C transfer rate where f_{MCK} = f_{CLK} = 32 MHz.

I²C Transfer Mode (Desired Transfer Rate)	f_{CLK} = 32 MHz			
	Operation Clock (f_{MCK})	SDRmn[15:9]	Calculated Transfer Rate	Error from Desired Transfer Rate
100 kHz	f_{CLK}/2	79	100 kHz	0.0%
400 kHz	f_{CLK}	39	400 kHz	0.0%

Remark m: Unit number (m = 0, 1), n: Channel number (n = 0, 1), mn = 00, 01, 10, 11

15.9.6 Procedure for processing errors that occurred during simplified I²C (IIC00, IIC01, IIC10, IIC11) communication

The procedure for processing errors that occurred during simplified I²C (IIC00, IIC01, IIC10, IIC11) communication is described in Figure 15-155 and 15-156.

Figure 15-155. Processing Procedure in Case of Overrun Error

Software Manipulation	Hardware Status	Remark
Reads serial data register mn (SDRmn). →	The BFFmn bit of the SSRmn register is set to 0 and channel n is enabled to receive data.	This is to prevent an overrun error if the next reception is completed during error processing.
Reads serial status register mn (SSRmn).		Error type is identified and the read value is used to clear error flag.
Writes 1 to serial flag clear trigger register mn (SIRmn). →	Error flag is cleared.	Error can be cleared only during reading, by writing the value read from the SSRmn register to the SIRmn register without modification.

Figure 15-156. Processing Procedure in Case of Parity Error (ACK error) in Simplified I²C Mode

Software Manipulation	Hardware Status	Remark
Reads serial data register mn (SDRmn). →	The BFFmn bit of the SSRmn register is set to 0 and channel n is enabled to receive data.	This is to prevent an overrun error if the next reception is completed during error processing.
Reads serial status register mn (SSRmn).		Error type is identified and the read value is used to clear error flag.
Writes serial flag clear trigger register mn (SIRmn). →	Error flag is cleared.	Error can be cleared only during reading, by writing the value read from the SSRmn register to the SIRmn register without modification.
Sets the STmn bit of serial channel stop register m (STm) to 1. →	The SEmn bit of serial channel enable status register m (SEm) is set to 0 and channel n stops operation.	Slave is not ready for reception because ACK is not returned. Therefore, a stop condition is created, the bus is released, and communication is started again from the start condition. Or, a restart condition is generated and transmission can be redone from address transmission.
Creates stop condition.		
Creates start condition.		
Sets the SSmn bit of serial channel start register m (SSm) to 1. →	The SEmn bit of serial channel enable status register m (SEm) is set to 1 and channel n is enabled to operate.	

Remark m: Unit number (m = 0, 1), n: Channel number (n = 0, 1), r: IIC number (r = 00, 01, 10, 11)
mn = 00, 01, 10, 11

CHAPTER 16 SERIAL INTERFACE IICA

The number of channels of the serial Interface IICA differs, depending on the product.

	Groups A, C-1, and D-1	Groups B, C-2, D-2, and E
Channel	–	1

Remark Group A: RL78/F13 (LIN incorporated) products with 20, 30, 32, 48, or 64 pins and 16 Kbytes to 64 Kbytes of code flash memory

Group B: RL78/F13 (LIN incorporated) products with 48 or 64 pins and 96 Kbytes to 128 Kbytes of code flash memory or with 80 pins and 64 Kbytes to 128 Kbytes of code flash memory

Group C-1: RL78/F13 (CAN incorporated) products with 30 pins and 32 Kbytes to 128 Kbytes of code flash memory

Group C-2: RL78/F13 (CAN incorporated) products with 32, 48, 64, or 80 pins and 32 Kbytes to 128 Kbytes of code flash memory

Group D-1: 30-pin products of the RL78/F14

Group D-2: RL78/F14 products with 32, 48, 64, or 80 pins and 48 Kbytes to 96 Kbytes of code flash memory

Group E: RL78/F14 products with 48, 64, or 80 pins and 128 Kbytes to 256 Kbytes of code flash memory or with 100 pins and 64 Kbytes to 256 Kbytes of code flash memory

Cautions 1. Most of the following descriptions in this chapter use the Group E products as an example.

2. Products of Groups A and C-1 do not have this function.

16.1 Functions of Serial Interface IICA

Serial interface IICA has the following three modes.

(1) Operation stop mode

This mode is used when serial transfers are not performed. It can therefore be used to reduce power consumption.

(2) I^2C bus mode (multimaster supported)

This mode is used for 8-bit data transfers with several devices via two lines: a serial clock (SCLA0) line and a serial data bus (SDAA0) line.

This mode complies with the I^2C bus format and the master device can generated “start condition”, “address”, “transfer direction specification”, “data”, and “stop condition” data to the slave device, via the serial data bus. The slave device automatically detects these received status and data by hardware. This function can simplify the part of application program that controls the I^2C bus.

Since the SCLA0 and SDAA0 pins are used for open drain outputs, serial interface IICA requires pull-up resistors for the serial clock line and the serial data bus line.

(3) Wakeup mode

The STOP mode can be released by generating an interrupt request signal (INTIICA0) when an extension code from the master device or a local address has been received while in STOP mode. This can be set by using the WUP0 bit of IICA control register 01 (IICCTL01).

Figure 16-1 shows a block diagram of serial interface IICA.

Figure 16-1. Block Diagram of Serial Interface IICA

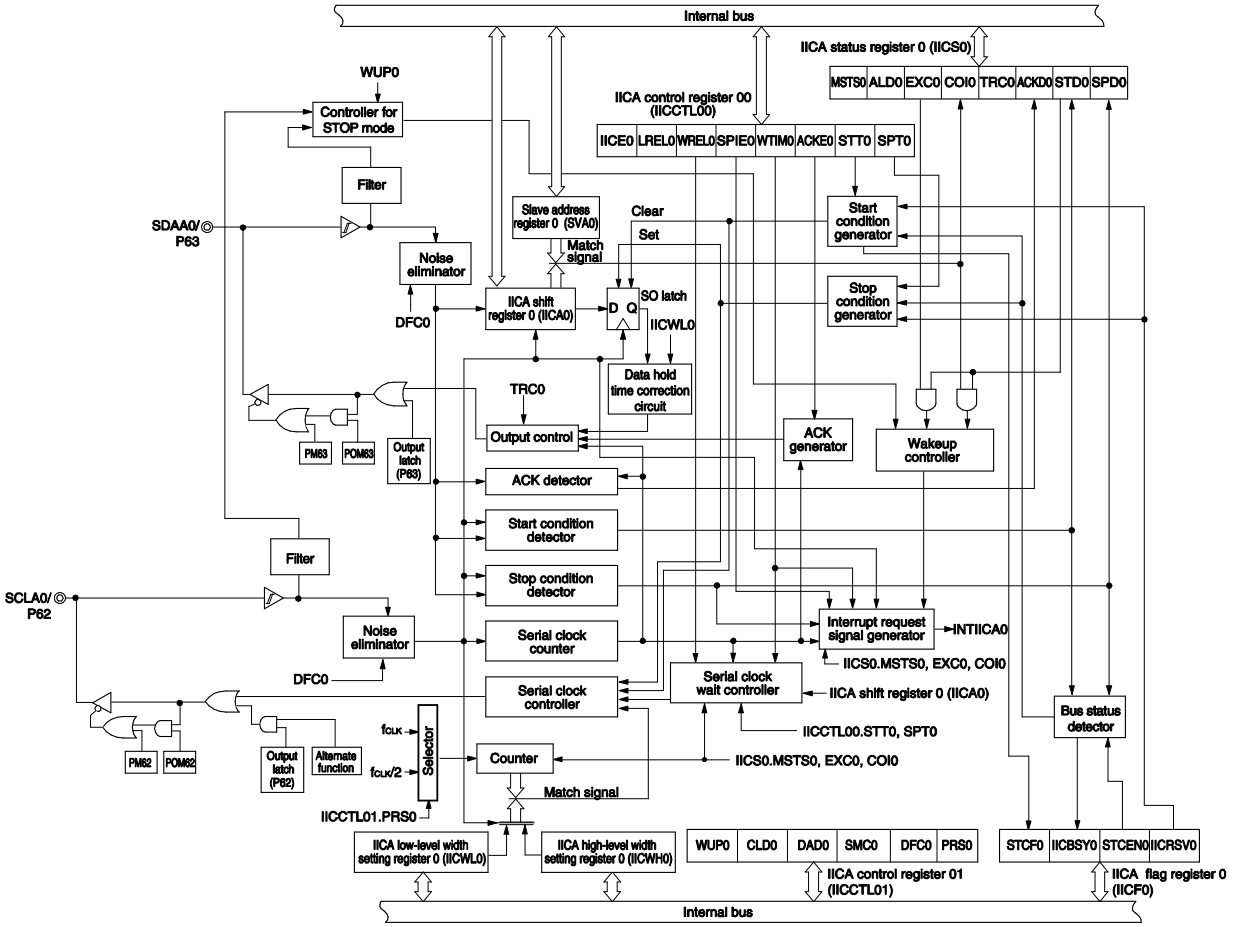

Figure 16-2 shows a serial bus configuration example.

Figure 16-2. Serial Bus Configuration Example Using I²C Bus

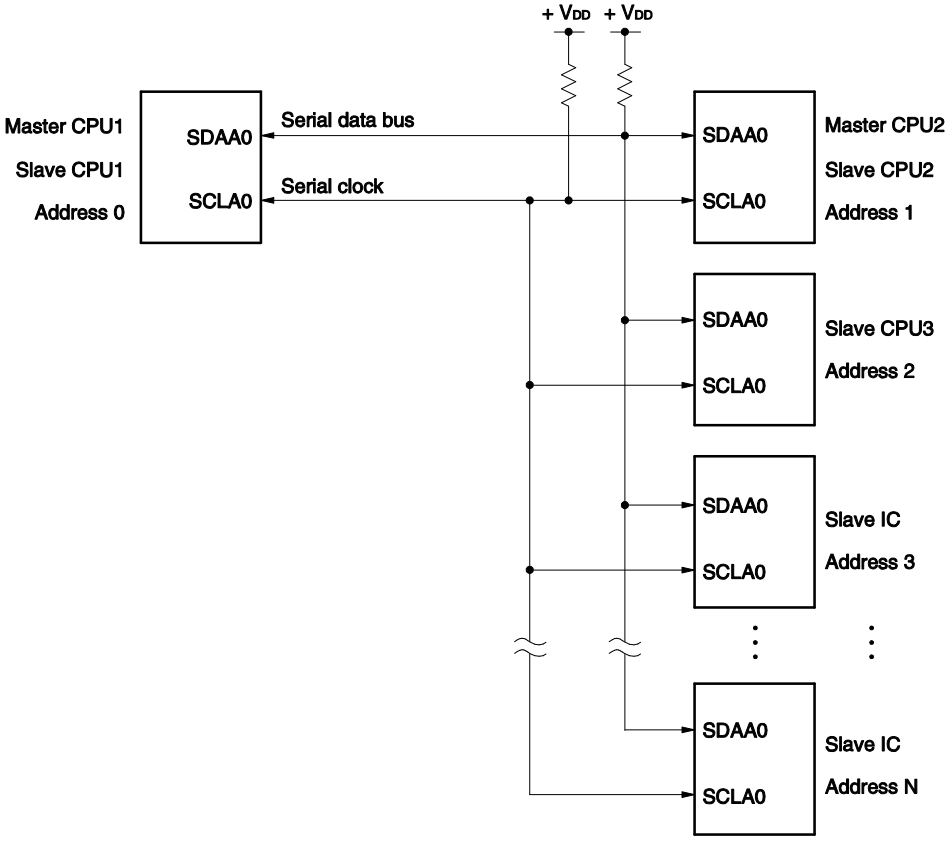

16.2 Configuration of Serial Interface IICA

Serial interface IICA includes the following hardware.

Table 16-1. Configuration of Serial Interface IICA

Item	Configuration
Registers	IICA shift register 0 (IICA0) Slave address register 0 (SVA0)
Control registers	Peripheral enable register 0 (PER0) IICA control register 00 (IICCTL00) IICA status register 0 (IICS0) IICA flag register 0 (IICF0) IICA control register 01 (IICCTL01) IICA low-level width setting register 0 (IICWL0) IICA high-level width setting register 0 (IICWH0) Port mode register 6 (PM6) Port register 6 (P6) Port output mode register 6 (POM6)

(1) IICA shift register 0 (IICA0)

The IICA0 register is used to convert 8-bit serial data to 8-bit parallel data and vice versa in synchronization with the serial clock. The IICA0 register can be used for both transmission and reception.

The actual transmit and receive operations can be controlled by writing and reading operations to the IICA0 register.

Cancel the wait state and start data transfer by writing data to the IICA0 register during the wait period.

The IICA0 register can be set by an 8-bit memory manipulation instruction.

Reset signal generation clears IICA0 to 00H.

Figure 16-3. Format of IICA Shift Register 0 (IICA0)

Address: FFF50H After reset: 00H R/W

Symbol	7	6	5	4	3	2	1	0
IICA0								

Cautions 1. Do not write data to the IICA0 register during data transfer.

2. Write or read the IICA0 register only during the wait period. Accessing the IICA0 register in a communication state other than during the wait period is prohibited. When the device serves as the master, however, the IICA0 register can be written only once after the communication trigger bit (STT0) is set to 1.

3. When communication is reserved, write data to the IICA0 register after the interrupt triggered by a stop condition is detected.

(2) Slave address register 0 (SVA0)

This register stores seven bits of local addresses {A6, A5, A4, A3, A2, A1, A0} when in slave mode.

The SVA0 register can be set by an 8-bit memory manipulation instruction.

However, rewriting to this register is prohibited while STD0 = 1 (while the start condition is detected).

Reset signal generation clears the SVA0 register to 00H.

Figure 16-4. Format of Slave Address Register 0 (SVA0)

Address: F0234H After reset: 00H R/W

Symbol	7	6	5	4	3	2	1	0
SVA0	A6	A5	A4	A3	A2	A1	A0	0[Note]

Note Bit 0 is fixed to 0.

(3) SO latch

The SO latch is used to retain the SDAA0 pin's output level.

(4) Wakeup controller

This circuit generates an interrupt request (INTIICA0) when the address received by this register matches the address value set to the slave address register 0 (SVA0) or when an extension code is received.

(5) Serial clock counter

This counter counts the serial clocks that are output or input during transmit/receive operations and is used to verify that 8-bit data was transmitted or received.

(6) Interrupt request signal generator

This circuit controls the generation of interrupt request signals (INTIICA0).

An I^2C interrupt request is generated by the following two triggers.

- Falling edge of eighth or ninth clock of the serial clock (set by the WTIM0 bit)
- Interrupt request generated when a stop condition is detected (set by the SPIE0 bit)

Remark WTIM0 bit: Bit 3 of IICA control register 00 (IICCTL00)
SPIE0 bit: Bit 4 of IICA control register 00 (IICCTL00)

(7) Serial clock controller

In master mode, this circuit generates the clock output via the SCLA0 pin from a sampling clock.

(8) Serial clock wait controller

This circuit controls the wait timing.

(9) ACK generator, stop condition detector, start condition detector, and ACK detector

These circuits generate and detect each status.

(10) Data hold time correction circuit

This circuit generates the hold time for data corresponding to the falling edge of the serial clock.

(11) Start condition generator

This circuit generates a start condition when the STT0 bit is set to 1.

However, in the communication reservation disabled status (IICRSV bit = 1), when the bus is not released (IICBSY bit = 1), start condition requests are ignored and the STCF bit is set to 1.

(12) Stop condition generator

This circuit generates a stop condition when the SPT0 bit is set to 1.

(13) Bus status detector

This circuit detects whether or not the bus is released by detecting start conditions and stop conditions.

However, as the bus status cannot be detected immediately following operation, the initial status is set by the STCEN0 bit.

Remark STT0 bit: Bit 1 of IICA control register 00 (IICCTL00)
SPT0 bit: Bit 0 of IICA control register 00 (IICCTL00)
IICRSV0 bit: Bit 0 of IICA flag register 0 (IICF0)
IICBSY0 bit: Bit 6 of IICA flag register 0 (IICF0)
STCF0 bit: Bit 7 of IICA flag register 0 (IICF0)
STCEN0 bit: Bit 1 of IICA flag register 0 (IICF0)

16.3 Registers Controlling Serial Interface IICA

<R> Serial interface IICA is controlled by the following ten registers.

- Peripheral enable register 0 (PER0)
- IICA control register 00 (IICCTL00)
- IICA flag register 0 (IICF0)
- IICA status register 0 (IICS0)
- IICA control register 01 (IICCTL01)
- IICA low-level width setting register 0 (IICWL0)
- IICA high-level width setting register 0 (IICWH0)
- Port mode register 6 (PM6)
- Port register 6 (P6)
- Port output mode register 6 (POM6)

16.3.1 Peripheral enable register 0 (PER0)

This register is used to enable or disable supplying the clock to the peripheral hardware. Clock supply to a hardware macro that is not used is stopped in order to reduce the power consumption and noise.

When serial interface IICA0 is used, be sure to set bit 4 (IICA0EN) of this register to 1.

The PER0 register can be set by a 1-bit or 8-bit memory manipulation instruction.

Reset signal generation clears this register to 00H.

Figure 16-5. Format of Peripheral Enable Register 0 (PER0)

Address: F00F0H After reset: 00H R/W

Symbol	<7>	6	<5>	<4>	<3>	<2>	<1>	<0>
PER0	RTCEN	0	ADCEN	IICA0EN Notes1, 2	SAU1EN Note1	SAU0EN	TAU1EN Note1	TAU0EN

IICA0EN	Control of serial interface IICA0 input clock supply
0	Stops input clock supply. • SFR used by serial interface IICA0 cannot be written. • Serial interface IICA0 is in the reset status.
1	Enables input clock supply. • SFR used by serial interface IICA0 can be read/written.

Notes 1. Not provided in the products of the RL78/F13 (LIN incorporated) with 20, 30, 32, 48, or 64 pins and 16 Kbytes to 64 Kbytes of code flash memory.

2. Not provided in the 30-pin products of the RL78/F13 (CAN and LIN incorporated) and the 30-pin products of the RL78/F14.

Cautions 1. When setting serial interface IICA0, be sure to set the IICA0EN bit to 1 first. If IICA0EN = 0, writing to a control register of serial interface IICA0 is ignored, and, even if the register is read, only the default value is read (except for port mode register 6 (PM6) and port register 6 (P6)).

2. Be sure to clear the following bits to 0.

Bits 1, 3, 4, and 6 in the RL78/F13 (LIN incorporated) products with 20, 30, 32, 48, or 64 pins and 16 Kbytes to 64 Kbytes of code flash memory.

Bits 4 and 6 in the 30-pin products of the RL78/F13 (CAN and LIN incorporated) and 30-pin products of the RL78/F14

Bit 6 in the products other than above

16.3.2 IICA control register 00 (IICCTL00)

This register is used to enable/stop I^2C operations, set wait timing, and set other I^2C operations.

The IICCTL00 register can be set by a 1-bit or 8-bit memory manipulation instruction. However, set the SPIE0, WTIM0, and ACKE0 bits while IICE0 = 0 or during the wait period. These bits can be set at the same time when the IICE0 bit is set from “0” to “1”.

Reset signal generation clears this register to 00H.

Figure 16-6. Format of IICA Control Register 00 (IICCTL00) (1/4)

Address: F0230H After reset: 00H R/W

Symbol	<7>	<6>	<5>	<4>	<3>	<2>	<1>	<0>
IICCTL00	IICE0	LREL0	WREL0	SPIE0	WTIM0	ACKE0	STT0	SPT0

IICE0	I²C operation enable
0	Stop operation. Reset the IICA status register 0 (IICS0) Note 1. Stop internal operation.
1	Enable operation.
★ Be sure to set this bit (1) while the SCLA0 and SDAA0 lines are at high level.	
Condition for clearing (IICE0 = 0)	Condition for setting (IICE0 = 1)
• Cleared by instruction • Reset	• Set by instruction

LREL0 Notes 2, 3	Exit from communications
0	Normal operation
1	This exits from the current communications and sets standby mode. This setting is automatically cleared to 0 after being executed. Its uses include cases in which a locally irrelevant extension code has been received. The SCLA0 and SDAA0 lines are set to high impedance. The following flags of IICA control register 00 (IICCTL00) and the IICA status register 0 (IICS0) are cleared to 0. • STT0 • SPT0 • MSTS0 • EXC0 • COI0 • TRC0 • ACKD0 • STD0
The standby mode following exit from communications remains in effect until the following communications entry conditions are met. • After a stop condition is detected, restart is in master mode. • An address match or extension code reception occurs after the start condition.	
Condition for clearing (LREL0 = 0)	Condition for setting (LREL0 = 1)
• Automatically cleared after execution • Reset	• Set by instruction

WREL0 Notes 2, 3	Wait cancellation
0	Do not cancel wait
1	Cancel wait. This setting is automatically cleared after wait is canceled.
When the WREL0 bit is set (wait canceled) during the wait period at the ninth clock pulse in the transmission status (TRC0 = 1), the SDAA0 line goes into the high impedance state (TRC0 = 0).	
Condition for clearing (WREL0 = 0)	Condition for setting (WREL0 = 1)
• Automatically cleared after execution • Reset	• Set by instruction

Notes 1. The IICA status register 0 (IICS0), the STCF0 and IICBSY0 bits of the IICA flag register 0 (IICF0), and the CLD0 and DAD0 bits of IICA control register 01 (IICCTL01) are reset.

2. The signal of this bit is invalid while IICE0 is 0.

3. When the LREL0 and WREL0 bits are read, 0 is always read.

Caution If the operation of I²C is enabled (IICE0 = 1) when the SCLA0 line is high level, the SDAA0 line is low level, and the digital filter is turned on (DFC0 bit of IICCTL01 register = 1), a start condition will be inadvertently detected immediately. In this case, set (1) the LREL0 bit by using a 1-bit memory manipulation instruction immediately after enabling operation of I²C (IICE0 = 1).

Figure 16-6. Format of IICA Control Register 00 (IICCTL00) (2/4)

SPIE0 Note 1	Enable/disable generation of interrupt request when stop condition is detected
0	Disable
1	Enable
If the WUP0 bit of IICA control register 01 (IICCTL01) is 1, no stop condition interrupt will be generated even if SPIE0 = 1.	
Condition for clearing (SPIE0 = 0)	Condition for setting (SPIE0 = 1)
• Cleared by instruction • Reset	• Set by instruction

WTIM0 Note 1	Control of wait and interrupt request generation
0	Interrupt request is generated at the eighth clock's falling edge. Master mode: After output of eight clocks, clock output is set to low level and wait is set. Slave mode: After input of eight clocks, the clock is set to low level and wait is set for master device.
1	Interrupt request is generated at the ninth clock's falling edge. Master mode: After output of nine clocks, clock output is set to low level and wait is set. Slave mode: After input of nine clocks, the clock is set to low level and wait is set for master device.
An interrupt is generated at the falling edge of the ninth clock during address transfer independently of the setting of this bit. The setting of this bit is valid when the address transfer is completed. When in master mode, a wait is inserted at the falling edge of the ninth clock during address transfers. For a slave device that has received a local address, a wait is inserted at the falling edge of the ninth clock after an acknowledge ($\overline{ACK}$) is issued. However, when the slave device has received an extension code, a wait is inserted at the falling edge of the eighth clock.	
Condition for clearing (WTIM0 = 0)	Condition for setting (WTIM0 = 1)
• Cleared by instruction • Reset	• Set by instruction

ACKE0 Notes 1, 2	Acknowledgment control
0	Disable acknowledgment.
1	Enable acknowledgment. During the ninth clock period, the SDAA0 line is set to low level.
Condition for clearing (ACKE0 = 0)	Condition for setting (ACKE0 = 1)
• Cleared by instruction • Reset	• Set by instruction

Notes 1. The signal of this bit is invalid while IICE0 is 0. Set this bit during that period.

2. The set value is invalid during address transfer and if the code is not an extension code.
When the device serves as a slave and the addresses match, an acknowledgment is generated regardless of the set value.

Figure 16-6. Format of IICA Control Register 00 (IICCTL00) (3/4)

STT0 Note	Start condition trigger
0	Do not generate a start condition.
1	When bus is released (in standby state, when IICBSY0 = 0): If this bit is set (1), a start condition is generated (startup as the master). When a third party is communicating: • When communication reservation function is enabled (IICRSV0 = 0) Functions as the start condition reservation flag. When set to 1, automatically generates a start condition after the bus is released. • When communication reservation function is disabled (IICRSV0 = 1) Even if this bit is set (1), the STT0 bit is cleared and the STT0 clear flag (STCF0) is set (1). No start condition is generated. In the wait state (when master device): Generates a restart condition after releasing the wait.

Cautions concerning set timing

- For master reception: Cannot be set to 1 during transfer. Can be set to 1 only in the waiting period when the ACKE0 bit has been cleared to 0 and slave has been notified of final reception.
- For master transmission: A start condition cannot be generated normally during the acknowledge period. Set to 1 during the wait period that follows output of the ninth clock.
- Cannot be set to 1 at the same time as stop condition trigger (SPT0).
- ★ Once STT0 is set (1), setting it again (1) before the clear condition is met is not allowed.

Condition for clearing (STT0 = 0)	Condition for setting (STT0 = 1)
★ • Cleared by setting the STT0 bit to 1 while communication reservation is prohibited. • Cleared by loss in arbitration • Cleared after start condition is generated by master device • Cleared by LREL0 = 1 (exit from communications) • When IICE0 = 0 (operation stop) • Reset	• Set by instruction

Note The signal of this bit is invalid while IICE0 is 0.

Remarks 1. Bit 1 (STT0) becomes 0 when it is read after data setting.

2. IICRSV0: Bit 0 of IICA flag register 0 (IICF0)
STCF0: Bit 7 of IICA flag register 0 (IICF0)

Figure 16-6. Format of IICA Control Register 00 (IICCTL00) (4/4)

SPT0	Stop condition trigger
0	Stop condition is not generated.
1	Stop condition is generated (termination of master device's transfer).

Cautions concerning set timing

- For master reception: Cannot be set to 1 during transfer.
  Can be set to 1 only in the waiting period when the ACKE0 bit has been cleared to 0 and slave has been notified of final reception.
- For master transmission: A stop condition cannot be generated normally during the acknowledge period.
  Therefore, set it during the wait period that follows output of the ninth clock.
- Cannot be set to 1 at the same time as start condition trigger (STT0).
- The SPT0 bit can be set to 1 only when in master mode.
- When the WTIM0 bit has been cleared to 0, if the SPT0 bit is set to 1 during the wait period that follows output of eight clocks, note that a stop condition will be generated during the high-level period of the ninth clock. The WTIM0 bit should be changed from 0 to 1 during the wait period following the output of eight clocks, and the SPT0 bit should be set to 1 during the wait period that follows the output of the ninth clock.
- Once STT0 is set (1), setting it again (1) before the clear condition is met is not allowed.

Condition for clearing (SPT0 = 0)	Condition for setting (SPT0 = 1)
• Cleared by loss in arbitration • Automatically cleared after stop condition is detected • Cleared by LREL0 = 1 (exit from communications) • When IICE0 = 0 (operation stop) • Reset	• Set by instruction

Caution When bit 3 (TRC0) of the IICA status register 0 (IICS0) is set to 1 (transmission status), bit 5 (WREL0) of IICA control register 00 (IICCTL00) is set to 1 during the ninth clock and wait is canceled, after which the TRC0 bit is cleared (reception status) and the SDAA0 line is set to high impedance. Release the wait performed while the TRC0 bit is 1 (transmission status) by writing to the IICA shift register 0.

Remark Bit 0 (SPT0) becomes 0 when it is read after data setting.

16.3.3 IICA status register 0 (IICS0)

This register indicates the status of I²C.

The IICS0 register is read by a 1-bit or 8-bit memory manipulation instruction only when STT0 = 1 and during the wait period.

Reset signal generation clears this register to 00H.

Caution Reading the IICS0 register while the address match wakeup function is enabled (WUP0 = 1) in STOP mode is prohibited. When the WUP0 bit is changed from 1 to 0 (wakeup operation is stopped), regardless of the INTIICA0 interrupt request, the change in status is not reflected until the next start condition or stop condition is detected. To use the wakeup function, therefore, enable (SPIE0 = 1) the interrupt generated by detecting a stop condition and read the IICS0 register after the interrupt has been detected.

Remark STT0: bit 1 of IICA control register 00 (IICCTL00)
WUP0: bit 7 of IICA control register 01 (IICCTL01)

Figure 16-7. Format of IICA Status Register 0 (IICS0) (1/3)

Address: FFF51H After reset: 00H R

Symbol	<7>	<6>	<5>	<4>	<3>	<2>	<1>	<0>
IICS0	MSTS0	ALD0	EXC0	COI0	TRC0	ACKD0	STD0	SPD0

MSTS0	Master status check flag
0	Slave device status or communication standby status
1	Master device communication status

Condition for clearing (MSTS0 = 0)	Condition for setting (MSTS0 = 1)
• When a stop condition is detected • When ALD0 = 1 (arbitration loss) • Cleared by LREL0 = 1 (exit from communications) • When the IICE0 bit changes from 1 to 0 (operation stop) • Reset	• When a start condition is generated

ALD0	Detection of arbitration loss
0	This status means either that there was no arbitration or that the arbitration result was a “win”.
1	This status indicates the arbitration result was a “loss”. The MSTS0 bit is cleared.

Condition for clearing (ALD0 = 0)	Condition for setting (ALD0 = 1)
• Automatically cleared after the IICS0 register is read **Note** • When the IICE0 bit changes from 1 to 0 (operation stop) • Reset	• When the arbitration result is a “loss”.

Note This register is also cleared when a 1-bit memory manipulation instruction is executed for bits other than the IICS0 register. Therefore, when using the ALD0 bit, read the data of this bit before the data of the other bits.

Remark LREL0: Bit 6 of IICA control register 00 (IICCTL00)
IICE0: Bit 7 of IICA control register 00 (IICCTL00)

Figure 16-7. Format of IICA Status Register 0 (IICS0) (2/3)

EXC0	Detection of extension code reception
0	Extension code was not received.
1	Extension code was received.

Condition for clearing (EXC0 = 0)	Condition for setting (EXC0 = 1)
• When a start condition is detected • When a stop condition is detected • Cleared by LREL0 = 1 (exit from communications) • When the IICE0 bit changes from 1 to 0 (operation stop) • Reset	• When the higher four bits of the received address data is either 0000 or 1111 (set at the rising edge of the eighth clock).

COI0	Detection of matching addresses
0	Addresses do not match.
1	Addresses match.

Condition for clearing (COI0 = 0)	Condition for setting (COI0 = 1)
• When a start condition is detected • When a stop condition is detected • Cleared by LREL0 = 1 (exit from communications) • When the IICE0 bit changes from 1 to 0 (operation stop) • Reset	• When the received address matches the local address (slave address register 0 (SVA0)) (set at the rising edge of the eighth clock).

TRC0	Detection of transmit/receive status
0	Receive status (other than transmit status). The SDAA0 line is set for high impedance.
1	Transmit status. The value in the SO0 latch is enabled for output to the SDAA0 line (valid starting at the falling edge of the first byte's ninth clock).

Condition for clearing (TRC0 = 0)	Condition for setting (TRC0 = 1)
<Both master and slave> • When a stop condition is detected • Cleared by LREL0 = 1 (exit from communications) • When the IICE0 bit changes from 1 to 0 (operation stop) • Cleared by WREL0 = 1 Note (wait cancel) • When the ALD0 bit changes from 0 to 1 (arbitration loss) • Reset • When not used for communication (MSTS0, EXC0, COI0 = 0) <Master> • When 1 is output to the LSB (transfer direction specification bit) of the first byte <Slave> • When a start condition is detected • When 0 is input to the LSB (transfer direction specification bit) of the first byte.	<Master> • When a start condition is generated • When 0 (master transmission) is output to the LSB (transfer direction specification bit) of the first byte (during address transfer). <Slave> • When 1 (slave transmission) is input to the LSB (transfer direction specification bit) of the first byte (during address transfer) from the master.

Note When bit 3 (TRC0) of the IICA status register 0 (IICS0) is set to 1 (transmission status), bit 5 (WREL0) of IICA control register 00 (IICCTL00) is set to 1 during the ninth clock and wait is canceled, after which the TRC0 bit is cleared (reception status) and the SDAA0 line is set to high impedance. Release the wait performed while the TRC0 bit is 1 (transmission status) by writing to the IICA shift register 0.

Remark LREL0: Bit 6 of IICA control register 00 (IICCTL00)
IICE0: Bit 7 of IICA control register 00 (IICCTL00)

Figure 16-7. Format of IICA Status Register 0 (IICS0) (3/3)

ACKD0	Detection of acknowledge ($\overline{ACK}$)
0	Acknowledge was not detected.
1	Acknowledge was detected.

Condition for clearing (ACKD0 = 0)	Condition for setting (ACKD0 = 1)
• When a stop condition is detected • At the rising edge of the next byte's first clock • Cleared by LREL0 = 1 (exit from communications) • When the IICE0 bit changes from 1 to 0 (operation stop) • Reset	• After the SDAA0 line is set to low level at the rising edge of SCLA0 line's ninth clock

STD0	Detection of start condition
0	Start condition was not detected.
1	Start condition was detected. This indicates that the address transfer period is in effect.

Condition for clearing (STD0 = 0)	Condition for setting (STD0 = 1)
• When a stop condition is detected • At the rising edge of the next byte's first clock following address transfer • Cleared by LREL0 = 1 (exit from communications) • When the IICE0 bit changes from 1 to 0 (operation stop) • Reset	• When a start condition is detected

SPD0	Detection of stop condition
0	Stop condition was not detected.
1	Stop condition was detected. The master device's communication is terminated and the bus is released.

Condition for clearing (SPD0 = 0)	Condition for setting (SPD0 = 1)
• At the rising edge of the address transfer byte's first clock following setting of this bit and detection of a start condition • When the WUP0 bit changes from 1 to 0 • When the IICE0 bit changes from 1 to 0 (operation stop) • Reset	• When a stop condition is detected

Remark LREL0: Bit 6 of IICA control register 00 (IICCTL00)
IICE0: Bit 7 of IICA control register 00 (IICCTL00)

16.3.4 IICA flag register 0 (IICF0)

This register sets the operation mode of I^{2}C and indicates the status of the I^{2}C bus.

The IICF0 register can be set by a 1-bit or 8-bit memory manipulation instruction. However, the STT0 clear flag (STCF0) and I^{2}C bus status flag (IICBSY0) bits are read-only.

The IICRSV0 bit can be used to enable/disable the communication reservation function.

The STCEN0 bit can be used to set the initial value of the IICBSY bit.

The IICRSV0 and STCEN0 bits can be written only when the operation of I^{2}C is disabled (bit 7 (IICE0) of IICA control register 00 (IICCTL00) = 0). When operation is enabled, the IICF0 register can be read.

Reset signal generation clears this register to 00H.

Figure 16-8. Format of IICA Flag Register 0 (IICF0)

Address: FFF52H After reset: 00H R/W[Note]

Symbol	<7>	<6>	5	4	3	2	<1>	<0>
IICF0	STCF0	IICBSY0	0	0	0	0	STCEN0	IICRSV0

STCF0	STT0 clear flag
0	Generate start condition
1	Start condition generation unsuccessful: clear the STT0 flag

Condition for clearing (STCF0 = 0)	Condition for setting (STCF0 = 1)
• Cleared by STT0 = 1 • When IICE0 = 0 (operation stop) • Reset	• Generating start condition unsuccessful and the STT0 bit cleared to 0 when communication reservation is disabled (IICRSV0 = 1).

IICBSY0	I^2C bus status flag
0	Bus release status (communication initial status when STCEN0 = 1)
1	Bus communication status (communication initial status when STCEN0 = 0)

Condition for clearing (IICBSY0 = 0)	Condition for setting (IICBSY0 = 1)
• Detection of stop condition • When IICE0 = 0 (operation stop) • Reset	• Detection of start condition • Setting of the IICE0 bit when STCEN0 = 0

STCEN0	Initial start enable trigger
0	After operation is enabled (IICE0 = 1), enable generation of a start condition upon detection of a stop condition.
1	After operation is enabled (IICE0 = 1), enable generation of a start condition without detecting a stop condition.

Condition for clearing (STCEN0 = 0)	Condition for setting (STCEN0 = 1)
• Cleared by instruction • Detection of start condition • Reset	• Set by instruction

IICRSV0	Communication reservation function disable bit
0	Enable communication reservation
1	Disable communication reservation

Condition for clearing (IICRSV0 = 0)	Condition for setting (IICRSV0 = 1)
• Cleared by instruction • Reset	• Set by instruction

Note Bits 6 and 7 are read-only.

Cautions 1. Write to the STCEN bit only when the operation is stopped (IICE0 = 0).

2. As the bus release status (IICBSY0 = 0) is recognized regardless of the actual bus status when STCEN0 = 1, when generating the first start condition (STT0 = 1), it is necessary to verify that no third party communications are in progress in order to prevent such communications from being destroyed.

3. Write to IICRSV0 only when the operation is stopped (IICE0 = 0).

Remark STT0: Bit 1 of IICA control register 00 (IICCTL00)
IICE0: Bit 7 of IICA control register 00 (IICCTL00)

16.3.5 IICA control register 01 (IICCTL01)

This register is used to set the operation mode of I²C and detect the statuses of the SCLA0 and SDAA0 pins.

The IICCTL01 register can be set by a 1-bit or 8-bit memory manipulation instruction. However, the CLD0 and DAD0 bits are read-only.

Set the IICCTL01 register, except the WUP0 bit, while operation of I²C is disabled (bit 7 (IICE0) of IICA control register 00 (IICCTL00) is 0).

Reset signal generation clears this register to 00H.

Figure 16-9. Format of IICA Control Register 01 (IICCTL01) (1/2)

Address: F0231H After reset: 00H R/W [Note 1]

Symbol	<7>	6	<5>	<4>	<3>	<2>	1	<0>
IICCTL01	WUP0	0	CLD0	DAD0	SMC0	DFC0	0	PRS0

WUP0	Control of address match wakeup
0	Stops operation of address match wakeup function in STOP mode.
1	Enables operation of address match wakeup function in STOP mode.

To shift to STOP mode when WUP0 = 1, execute the STOP instruction at least three cycles of the operation clock (f_{MCK}) after setting (1) the WUP0 bit (see **Figure 16-23 Flow When Setting WUP0 = 1**).
Clear (0) the WUP0 bit after the address has matched or an extension code has been received. The subsequent communication can be entered by the clearing (0) WUP0 bit. (The wait must be released and transmit data must be written after the WUP0 bit has been cleared (0).)
The interrupt timing when the address has matched or when an extension code has been received, while WUP0 = 1, is identical to the interrupt timing when WUP0 = 0. (A delay of the difference of sampling by the clock will occur.) Furthermore, when WUP0 = 1, a stop condition interrupt is not generated even if the SPIE0 bit is set to 1.
When WUP0 = 0 is set by a source other than an interrupt from serial interface IICA, operation as the master device cannot be performed until the subsequent start condition or stop condition is detected. Do not output a start condition by setting (1) the STT0 bit, without waiting for the detection of the subsequent start condition or stop condition.

Condition for clearing (WUP0 = 0)	Condition for setting (WUP0 = 1)
• Cleared by instruction (after address match or extension code reception)	• Set by instruction (when the MSTS0, EXC0, and COI0 bits are “0”, and the STD0 bit also “0” (communication not entered)) [Note 2]

Notes 1. Bits 4 and 5 are read-only.

2. The status of the IICA status register 0 (IICS0) must be checked and the WUP0 bit must be set during the period shown below.

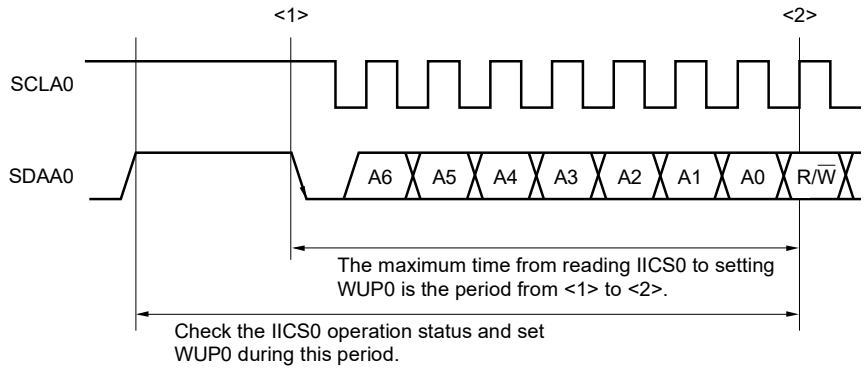

Figure 16-9. Format of IICA Control Register 01 (IICCTL01) (2/2)

CLD0	Detection of SCLA0 pin level (valid only when IICE0 = 1)
0	The SCLA0 pin was detected at low level.
1	The SCLA0 pin was detected at high level.

Condition for clearing (CLD0 = 0)	Condition for setting (CLD0 = 1)
• When the SCLA0 pin is at low level • When IICE0 = 0 (operation stop) • Reset	• When the SCLA0 pin is at high level

DAD0	Detection of SDAA0 pin level (valid only when IICE0 = 1)
0	The SDAA0 pin was detected at low level.
1	The SDAA0 pin was detected at high level.

Condition for clearing (DAD0 = 0)	Condition for setting (DAD0 = 1)
• When the SDAA0 pin is at low level • When IICE0 = 0 (operation stop) • Reset	• When the SDAA0 pin is at high level

SMC0	Operation mode switching
0	Operates in standard mode (fastest transfer rate: 100 kbps).
1	Operates in fast mode (fastest transfer rate: 400 kbps) or fast mode plus (fastest transfer rate: 1 Mbps).

DFC0	Digital filter operation control
0	Digital filter off.
1	Digital filter on.
Digital filter can be used only in fast mode. In fast mode and fast mode plus, the transfer clock does not vary, regardless of the DFC0 bit being set (1) or cleared (0). The digital filter is used for noise elimination in fast mode and fast mode plus.	

PRS0	Control of the operation clock for IICA (f_{MCK})
0	Selects f_{CLK} (1 MHz ≤ f_{CLK} ≤ 20 MHz).
1	Selects $f_{CLK}/2$ (20 MHz < f_{CLK}).

Cautions 1. The fastest operation frequency of the operation clock for IICA (f_{MCK}) is 20 MHz (max.). Set bit 0 (PRS0) of the IICA control register 01 (IICCTL01) to 1 only when the f_{CLK} exceeds 20 MHz.

2. Note the minimum f_{CLK} operation frequency when setting the transfer clock. The minimum f_{CLK} operation frequency for serial interface IICA is determined according to the mode.

Fast mode: f_{CLK} = 3.5 MHz (min.)
Fast mode plus: f_{CLK} = 10 MHz (min.)
Normal mode: f_{CLK} = 1 MHz (min.)

Remark IICE0: Bit 7 of IICA control register 00 (IICCTL00)

16.3.6 IICA low-level width setting register 0 (IICWL0)

This register is used to set the low-level width (t_{LOW}) of the SCLA0 pin signal that is output by serial interface IICA.

The IICWL0 register can be set by an 8-bit memory manipulation instruction.

Set the IICWL0 register while operation of I^2C is disabled (bit 7 (IICE0) of IICA control register 00 (IICCTL00) is 0).

Reset signal generation sets this register to FFH.

For details about setting the IICWL0 register, see **16.4.2 Setting transfer clock by using IICWL0 and IICWH0 registers**.

Figure 16-10. Format of IICA Low-Level Width Setting Register 0 (IICWL0)

Address: F0232H After reset: FFH R/W

Symbol	7	6	5	4	3	2	1	0
IICWL0								

16.3.7 IICA high-level width setting register 0 (IICWH0)

This register is used to set the high-level width of the SCLA0 pin signal that is output by serial interface IICA.

The IICWH0 register can be set by an 8-bit memory manipulation instruction.

Set the IICWH0 register while operation of I^2C is disabled (bit 7 (IICE0) of IICA control register 00 (IICCTL00) is 0).

Reset signal generation sets this register to FFH.

Figure 16-11. Format of IICA High-Level Width Setting Register 0 (IICWH0)

Address: F0233H After reset: FFH R/W

Symbol	7	6	5	4	3	2	1	0
IICWH0								

Remark For how to set the transfer clock by using the IICWL0 and IICWH0 registers, see **16.4.2 Setting transfer clock by using IICWL0 and IICWH0 registers**.

16.3.8 Port mode register 6 (PM6)

This register sets the input/output of port 6 in 1-bit units.

When using the P62/SCLA0 pin as clock I/O and the P63/SDAA0 pin as serial data I/O, clear P62, P63, and the output latches of P62 and P63 to 0.

Set the IICE0 bit (bit 7 of IICA control register 00 (IICCTL00)) to 1 before setting the output mode because the P62/SCLA0 and P63/SDAA0 pins output a low level (fixed) when the IICE0 bit is 0.

The PM6 register can be set by a 1-bit or 8-bit memory manipulation instruction.

Reset signal generation sets this register to FFH.

Figure 16-12. Format of Port Mode Register 6 (PM6)

Address: FFF26H After reset: FFH R/W

Symbol	7	6	5	4	3	2	1	0
PM6	1	1	1	1	PM63	PM62	PM61	PM60

PM6n	P6n pin I/O mode selection (n = 0 to 3)
0	Output mode (output buffer on)
1	Input mode (output buffer off)

Caution PM62 and PM63 are used for the IICA serial interface.

16.3.9 Port output mode register (POM6)

This register sets the output mode of P60 to P63 in 1-bit units.

N-ch open drain output (EV_{DD0} tolerance) mode can be selected for the SCLA0 and SDAA0 pins during I^2C communication.

When using the P62/SCLA0 pin as clock I/O and the P63/SDAA0 pin as serial data I/O, set POM62 and POM63 to 1.

Set the IICE0 bit (bit 7 of IICA control register 00 (IICCTL00)) to 1 before setting the output mode because the P62/SCLA0 and P63/SDAA0 pins output a low level (fixed) when the IICE0 bit is 0.

The POM6 register can be set by a 1-bit or 8-bit memory manipulation instruction.

Reset signal generation clears this register to 00H.

Figure 16-13. Format of Port Output Mode Register 6 (POM6)

Address: F0056H After reset: 00H R/W

Symbol	7	6	5	4	3	2	1	0
POM6	0	0	0	0	POM63	POM62	POM61	POM60

POMmn	P6n pin output mode selection (n = 0 to 3)
0	Normal output mode
1	N-ch open-drain output (EV_{DD0} tolerance) mode

Caution POM62 and POM63 are used for the IICA serial interface.

16.4 I²C Bus Mode Functions

16.4.1 Pin configuration

The serial clock pin (SCLA0) and the serial data bus pin (SDAA0) are configured as follows.

(1) SCLA0 .... This pin is used for serial clock input and output.
This pin is an N-ch open-drain output for both master and slave devices. Input is Schmitt input.

(2) SDAA0 .... This pin is used for serial data input and output.
This pin is an N-ch open-drain output for both master and slave devices. Input is Schmitt input.

Since outputs from the serial clock line and the serial data bus line are N-ch open-drain outputs, an external pull-up resistor is required.

Figure 16-14. Pin Configuration Diagram

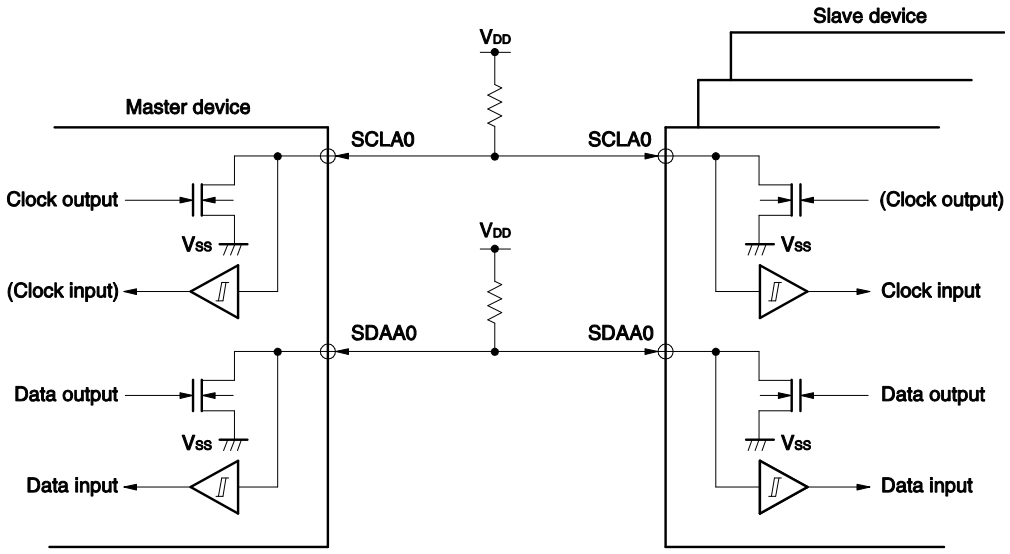

16.4.2 Setting transfer clock by using IICWL0 and IICWH0 registers

(1) Setting transfer clock on master side

$$\text{Transfer clock} = \frac{f_{MCK}}{IICWL0 + IICWH0 + f_{MCK}(t_R + t_F)}$$

At this time, the optimal setting values of the IICWL0 and IICWH0 registers are as follows.
(The fractional parts of all setting values are rounded up.)

- When the fast mode

$$IICWL0 = \frac{0.52}{\text{Transfer clock}} \times f_{MCK}$$
$$IICWH0 = \left(\frac{0.48}{\text{Transfer clock}} - t_R - t_F\right) \times f_{MCK}$$

- When the normal mode

$$IICWL0 = \frac{0.47}{\text{Transfer clock}} \times f_{MCK}$$
$$IICWH0 = \left(\frac{0.53}{\text{Transfer clock}} - t_R - t_F\right) \times f_{MCK}$$

- When the fast mode plus

$$IICWL0 = \frac{0.50}{\text{Transfer clock}} \times f_{MCK}$$
$$IICWH0 = \left(\frac{0.50}{\text{Transfer clock}} - t_R - t_F\right) \times f_{MCK}$$

(2) Setting IICWL0 and IICWH0 registers on slave side

(The fractional parts of all setting values are truncated.)

- When the fast mode

$$IICWL0 = 1.3\ \mu s \times f_{MCK}$$
$$IICWH0 = (1.2\ \mu s - t_R - t_F) \times f_{MCK}$$

- When the normal mode

$$IICWL0 = 4.7\ \mu s \times f_{MCK}$$
$$IICWH0 = (5.3\ \mu s - t_R - t_F) \times f_{MCK}$$

- When the fast mode plus

$$IICWL0 = 0.50\ \mu s \times f_{MCK}$$
$$IICWH0 = (0.50\ \mu s - t_R - t_F) \times f_{MCK}$$

(**Cautions** and **Remarks** are listed on the next page.)

Cautions 1. The fastest operation frequency of the operation clock for IICA (f_{MCK}) is 20 MHz (max.). Set bit 0 (PRS0) of the IICA control register 01 (IICCTL01) to 1 only when the f_{CLK} exceeds 20 MHz.

2. Note the minimum f_{CLK} operation frequency when setting the transfer clock. The minimum f_{CLK} operation frequency for serial interface IICA is determined according to the mode.

Fast mode: f_{CLK} = 3.5 MHz (min.)

Fast mode plus: f_{CLK} = 10 MHz (min.)

Normal mode: f_{CLK} = 1 MHz (min.)

Remarks 1. Calculate the rise time (t_R) and fall time (t_F) of the SDAA0 and SCLA0 signals separately, because they differ depending on the pull-up resistance and wire load.

2. IICWL0: IICA low-level width setting register 0

IICWH0: IICA high-level width setting register 0

t_F: SDAA0 and SCLA0 signal falling times

t_R: SDAA0 and SCLA0 signal rising times

f_{MCK}: Frequency of the IICA operation clock

16.5 I²C Bus Definitions and Control Methods

The following section describes the I²C bus's serial data communication format and the signals used by the I²C bus. Figure 16-15 shows the transfer timing for the "start condition", "address", "data", and "stop condition" output via the I²C bus's serial data bus.

Figure 16-15. I²C Bus Serial Data Transfer Timing

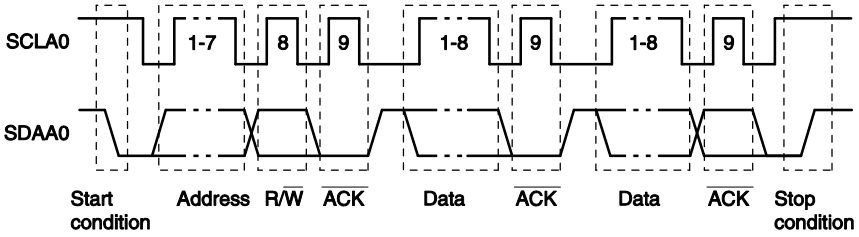

The master device generates the start condition, slave address, and stop condition.
The acknowledge ($\overline{ACK}$) can be generated by either the master or slave device (normally, it is output by the device that receives 8-bit data).

The serial clock (SCLA0) is continuously output by the master device. However, in the slave device, the SCLA0 pin low level period can be extended and a wait can be inserted.

16.5.1 Start conditions

A start condition is met when the SCLA0 pin is at high level and the SDAA0 pin changes from high level to low level. The start conditions for the SCLA0 pin and SDAA0 pin are signals that the master device generates to the slave device when starting a serial transfer. When the device is used as a slave, start conditions can be detected.

Figure 16-16. Start Conditions

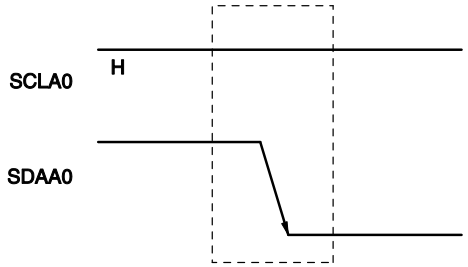

A start condition is output when bit 1 (STT0) of IICA control register 00 (IICCTL00) is set (1) after a stop condition has been detected (SPD0: Bit 0 of the IICA status register 0 (IICS0) = 1). When a start condition is detected, bit 1 (STD0) of the IICS0 register is set (1).

16.5.2 Addresses

The address is defined by the 7 bits of data that follow the start condition.

An address is a 7-bit data segment that is output in order to select one of the slave devices that are connected to the master device via the bus lines. Therefore, each slave device connected via the bus lines must have a unique address.

The slave devices include hardware that detects the start condition and checks whether or not the 7-bit address data matches the data values stored in the slave address register 0 (SVA0). If the address data matches the SVA0 register values, the slave device is selected and communicates with the master device until the master device generates a start condition or stop condition.

Figure 16-17. Address

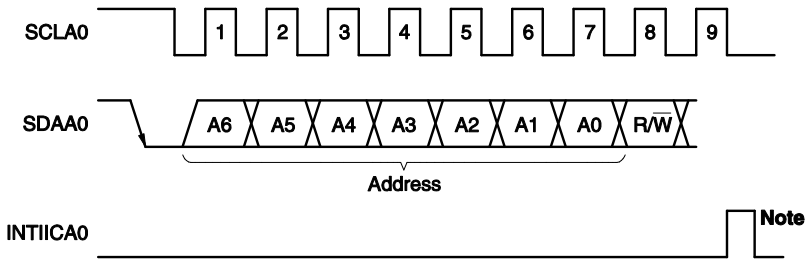

Note INTIICA0 is not issued if data other than a local address or extension code is received during slave device operation.

Addresses are output when a total of 8 bits consisting of the slave address and the transfer direction described in **16.5.3 Transfer direction specification** are written to the IICA shift register 0 (IICA0). The received addresses are written to the IICA0 register.

The slave address is assigned to the higher 7 bits of the IICA0 register.

16.5.3 Transfer direction specification

In addition to the 7-bit address data, the master device sends 1 bit that specifies the transfer direction.

When this transfer direction specification bit has a value of “0”, it indicates that the master device is transmitting data to a slave device. When the transfer direction specification bit has a value of “1”, it indicates that the master device is receiving data from a slave device.

Figure 16-18. Transfer Direction Specification

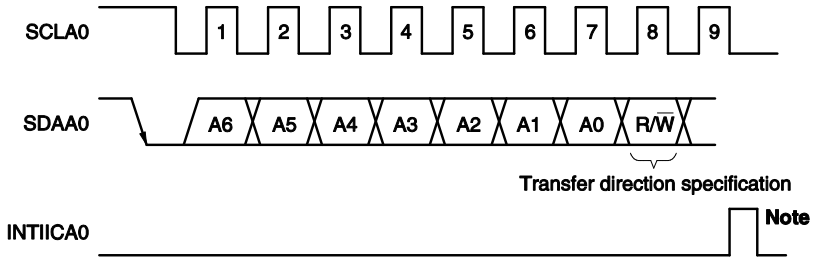

Note INTIICA0 is not issued if data other than a local address or extension code is received during slave device operation.

16.5.4 Acknowledge ($\overline{\text{ACK}}$)

$\overline{\text{ACK}}$ is used to check the status of serial data at the transmission and reception sides.

The reception side returns $\overline{\text{ACK}}$ each time it has received 8-bit data.

The transmission side usually receives $\overline{\text{ACK}}$ after transmitting 8-bit data. When $\overline{\text{ACK}}$ is returned from the reception side, it is assumed that reception has been correctly performed and processing is continued. Whether $\overline{\text{ACK}}$ has been detected can be checked by using bit 2 (ACKD0) of the IICA status register 0 (IICS0).

When the master receives the last data item, it does not return $\overline{\text{ACK}}$ and instead generates a stop condition. If a slave does not return $\overline{\text{ACK}}$ after receiving data, the master outputs a stop condition or restart condition and stops transmission. If $\overline{\text{ACK}}$ is not returned, the possible causes are as follows.

<1> Reception was not performed normally.
<2> The final data item was received.
<3> The reception side specified by the address does not exist.

To generate $\overline{\text{ACK}}$, the reception side makes the SDAA0 line low at the ninth clock (indicating normal reception).

Automatic generation of $\overline{\text{ACK}}$ is enabled by setting bit 2 (ACKE0) of IICA control register 00 (IICCTL00) to 1. Bit 3 (TRC0) of the IICS0 register is set by the data of the eighth bit that follows 7-bit address information. Usually, set the ACKE0 bit to 1 for reception (TRC0 = 0).

If a slave can receive no more data during reception (TRC0 = 0) or does not require the next data item, then the slave must inform the master, by clearing the ACKE0 bit to 0, that it will not receive any more data.

When the master does not require the next data item during reception (TRC0 = 0), it must clear the ACKE0 bit to 0 so that $\overline{\text{ACK}}$ is not generated. In this way, the master informs a slave at the transmission side that it does not require any more data (transmission will be stopped).

Figure 16-19. $\overline{\text{ACK}}$

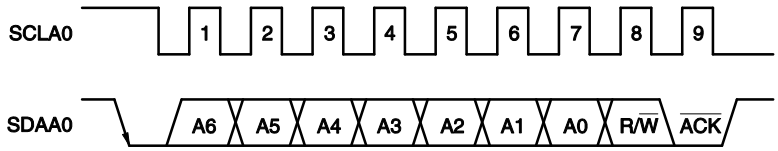

When the local address is received, $\overline{\text{ACK}}$ is automatically generated, regardless of the value of the ACKE0 bit. When an address other than that of the local address is received, $\overline{\text{ACK}}$ is not generated (NACK).

When an extension code is received, $\overline{\text{ACK}}$ is generated if the ACKE0 bit is set to 1 in advance.

How $\overline{\text{ACK}}$ is generated when data is received differs as follows depending on the setting of the wait timing.

- When 8-clock wait state is selected (bit 3 (WTIM0) of IICCTL00 register = 0):
  By setting the ACKE0 bit to 1 before releasing the wait state, $\overline{\text{ACK}}$ is generated at the falling edge of the eighth clock of the SCLA0 pin.
- When 9-clock wait state is selected (bit 3 (WTIM0) of IICCTL00 register = 1):
  $\overline{\text{ACK}}$ is generated by setting the ACKE0 bit to 1 in advance.

16.5.5 Stop condition

When the SCLA0 pin is at high level, changing the SDAA0 pin from low level to high level generates a stop condition.

A stop condition is a signal that the master device generates to the slave device when serial transfer has been completed. When the device is used as a slave, stop conditions can be detected.

Figure 16-20. Stop Condition

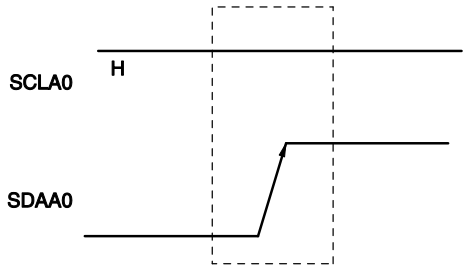

A stop condition is generated when bit 0 (SPT0) of IICA control register 00 (IICCTL00) is set to 1. When the stop condition is detected, bit 0 (SPD0) of the IICA status register 0 (IICS0) is set to 1 and INTIICA0 is generated when bit 4 (SPIE0) of the IICCTL00 register is set to 1.

16.5.6 Wait

The wait is used to notify the communication partner that a device (master or slave) is preparing to transmit or receive data (i.e., is in a wait state).

Setting the SCLA0 pin to low level notifies the communication partner of the wait state. When wait state has been canceled for both the master and slave devices, the next data transfer can begin.

Figure 16-21. Wait (1/2)

(1) When master device has a nine-clock wait and slave device has an eight-clock wait (master transmits, slave receives, and ACKE0 = 1)

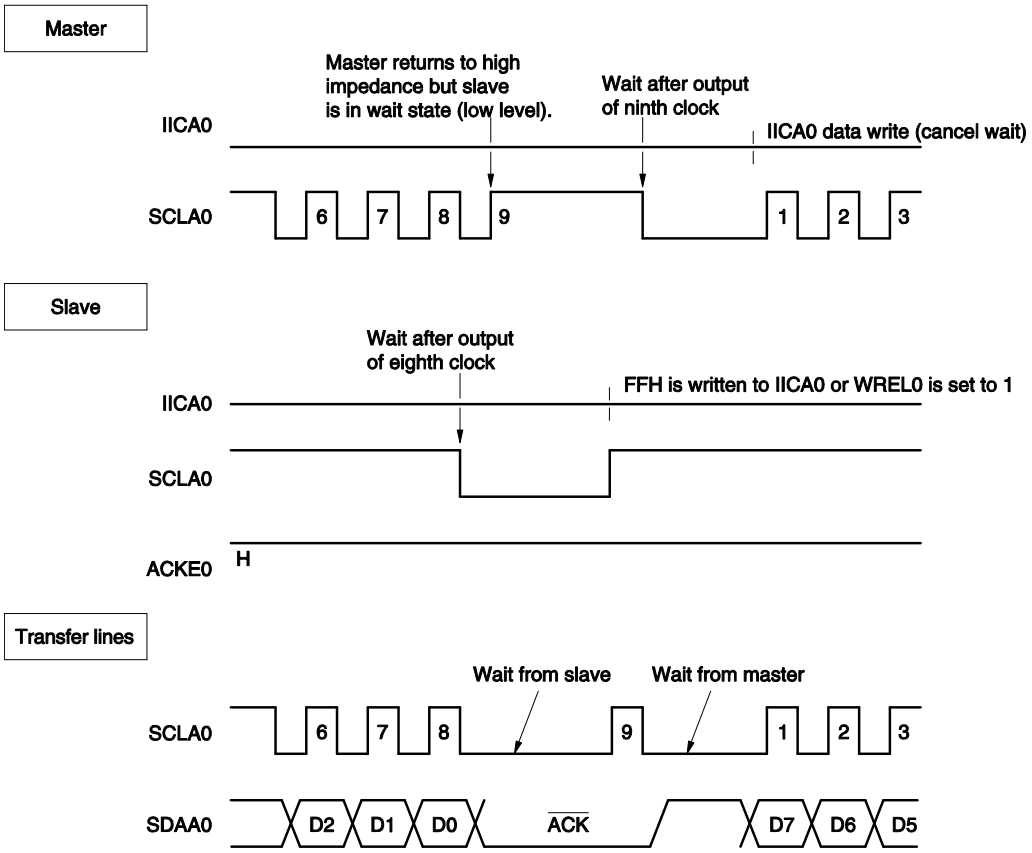

Figure 16-21. Wait (2/2)

(2) When master and slave devices both have a nine-clock wait (master transmits, slave receives, and ACKE0 = 1)

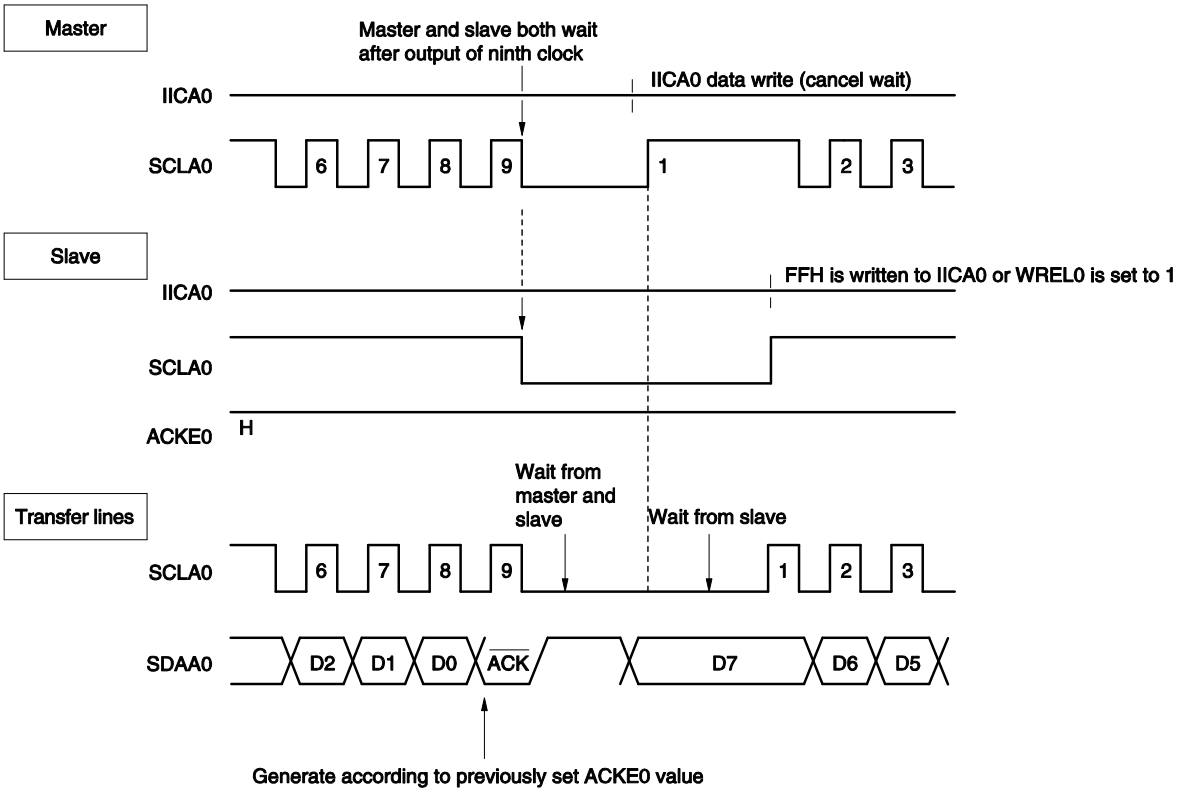

Remark ACKE0: Bit 2 of IICA control register 00 (IICCTL00)
WREL0: Bit 5 of IICA control register 00 (IICCTL00)

A wait may be automatically generated depending on the setting of bit 3 (WTIM0) of IICA control register 00 (IICCTL00).

Normally, the receiving side cancels the wait state when bit 5 (WREL0) of the IICCTL00 register is set to 1 or when FFH is written to the IICA shift register 0 (IICA0), and the transmitting side cancels the wait state when data is written to the IICA0 register.

The master device can also cancel the wait state via either of the following methods.

- By setting bit 1 (STT0) of the IICCTL00 register to 1
- By setting bit 0 (SPT0) of the IICCTL00 register to 1

16.5.7 Canceling wait

The I²C usually cancels a wait state by the following processing.

- Writing data to the IICA shift register 0 (IICA0)
- Setting bit 5 (WREL0) of IICA control register 00 (IICCTL00) (canceling wait)
- Setting bit 1 (STT0) of the IICCTL00 register (generating start condition) Note
- Setting bit 0 (SPT0) of the IICCTL00 register (generating stop condition) Note

Note Master only

When the above wait canceling processing is executed, the I²C cancels the wait state and communication is resumed.

To cancel a wait state and transmit data (including addresses), write the data to the IICA0 register.

To receive data after canceling a wait state, or to complete data transmission, set bit 5 (WREL0) of the IICCTL00 register to 1.

To generate a restart condition after canceling a wait state, set bit 1 (STT0) of the IICCTL00 register to 1.

To generate a stop condition after canceling a wait state, set bit 0 (SPT0) of the IICCTL00 register to 1.

Execute the canceling processing only once for one wait state.

If, for example, data is written to the IICA0 register after canceling a wait state by setting the WREL0 bit to 1, an incorrect value may be output to SDAA0 line because the timing for changing the SDAA0 line conflicts with the timing for writing the IICA0 register.

In addition to the above, communication is stopped if the IICE0 bit is cleared to 0 when communication has been aborted, so that the wait state can be canceled.

If the I²C bus has deadlocked due to noise, processing is saved from communication by setting bit 6 (LREL0) of the IICCTL00 register, so that the wait state can be canceled.

Caution If a processing to cancel a wait state is executed when WUP0 = 1, the wait state will not be canceled.

16.5.8 Interrupt request (INTIICA0) generation timing and wait control

The setting of bit 3 (WTIM0) of IICA control register 00 (IICCTL00) determines the timing by which INTIICA0 is generated and the corresponding wait control, as shown in Table 16-2.

Table 16-2. INTIICA0 Generation Timing and Wait Control

WTIM0	During Slave Device Operation			During Master Device Operation		
	Address	Data Reception	Data Transmission	Address	Data Reception	Data Transmission
0	9 Notes 1, 2	8 Note 2	8 Note 2	9	8	8
1	9 Notes 1, 2	9 Note 2	9 Note 2	9	9	9

Notes 1. The slave device's INTIICA0 signal and wait period occurs at the falling edge of the ninth clock only when there is a match with the address set to the slave address register 0 (SVA0).
At this point, $\overline{ACK}$ is generated regardless of the value set to the IICCTL00 register's bit 2 (ACKE0). For a slave device that has received an extension code, INTIICA0 occurs at the falling edge of the eighth clock.
However, if the address does not match after restart, INTIICA0 is generated at the falling edge of the 9th clock, but wait does not occur.

2. If the received address does not match the contents of the slave address register 0 (SVA0) and extension code is not received, neither INTIICA0 nor a wait occurs.

Remark The numbers in the table indicate the number of the serial clock's clock signals. Interrupt requests and wait control are both synchronized with the falling edge of these clock signals.

(1) During address transmission/reception

- Slave device operation: Interrupt and wait timing are determined depending on the conditions described in Notes 1 and 2 above, regardless of the WTIM0 bit.
- Master device operation: Interrupt and wait timing occur at the falling edge of the ninth clock regardless of the WTIM0 bit.

(2) During data reception

- Master/slave device operation: Interrupt and wait timing are determined according to the WTIM0 bit.

(3) During data transmission

- Master/slave device operation: Interrupt and wait timing are determined according to the WTIM0 bit.

(4) Wait cancellation method

The four wait cancellation methods are as follows.

- Writing data to the IICA shift register 0 (IICA0)
- Setting bit 5 (WREL0) of IICA control register 00 (IICCTL00) (canceling wait)
- Setting bit 1 (STT0) of IICCTL00 register (generating start condition)Note
- Setting bit 0 (SPT0) of IICCTL00 register (generating stop condition)Note

Note Master only.

When an 8-clock wait has been selected (WTIM0 = 0), the presence/absence of $\overline{ACK}$ generation must be determined prior to wait cancellation.

(5) Stop condition detection

INTIICA0 is generated when a stop condition is detected (only when SPIE0 = 1).

16.5.9 Address match detection method

In I²C bus mode, the master device can select a particular slave device by transmitting the corresponding slave address.

Address match can be detected automatically by hardware. An interrupt request (INTIICA0) occurs when the address set to the slave address register 0 (SVA0) matches the slave address sent by the master device, or when an extension code has been received.

16.5.10 Error detection

In I²C bus mode, the status of the serial data bus (SDAA0) during data transmission is captured by the IICA shift register 0 (IICA0) of the transmitting device, so the IICA data prior to transmission can be compared with the transmitted IICA data to enable detection of transmission errors. A transmission error is judged as having occurred when the compared data values do not match.

16.5.11 Extension code

(1) When the higher 4 bits of the receive address are either 0000 or 1111, the extension code reception flag (EXC0) is set to 1 for extension code reception and an interrupt request (INTIICA0) is issued at the falling edge of the eighth clock. The local address stored in the slave address register 0 (SVA0) is not affected.

(2) The settings below are specified if 11110xx0 is transferred from the master by using a 10-bit address transfer when the SVA0 register is set to 11110xx0. Note that INTIICA0 occurs at the falling edge of the eighth clock.

- Higher four bits of data match: EXC0 = 1
- Seven bits of data match: COI0 = 1

Remark EXC0: Bit 5 of IICA status register 0 (IICS0)
COI0: Bit 4 of IICA status register 0 (IICS0)

(3) Since the processing after the interrupt request occurs differs according to the data that follows the extension code, such processing is performed by software.
If the extension code is received while a slave device is operating, then the slave device is participating in communication even if its address does not match.
For example, after the extension code is received, if you do not wish to operate the target device as a slave device, set bit 6 (LREL0) of IICA control register 00 (IICCTL00) to 1 to set the standby mode for the next communication operation.

Table 16-3. Bit Definitions of Major Extension Codes

Slave Address	R/W Bit	Description
0 0 0 0 0 0 0	0	General call address
1 1 1 1 0 x x	0	10-bit slave address specification (during address authentication)
1 1 1 1 0 x x	1	10-bit slave address specification (after address match, when read command is issued)

Remark See the I²C bus specifications issued by NXP Semiconductors for details of extension codes other than those described above.

16.5.12 Arbitration

When several master devices simultaneously generate a start condition (when the STT0 bit is set to 1 before the STD0 bit is set to 1), communication among the master devices is performed as the number of clocks are adjusted until the data differs. This kind of operation is called arbitration.

When one of the master devices loses in arbitration, an arbitration loss flag (ALD0) in the IICA status register 0 (IICS0) is set (1) via the timing by which the arbitration loss occurred, and the SCLA0 and SDAA0 lines are both set to high impedance, which releases the bus.

The arbitration loss is detected based on the timing of the next interrupt request (the eighth or ninth clock, when a stop condition is detected, etc.) and the ALD0 = 1 setting that has been made by software.

For details of interrupt request timing, see **16.5.8 Interrupt request (INTIICA0) generation timing and wait control**.

Remark STD0: Bit 1 of IICA status register 0 (IICS0)
STT0: Bit 1 of IICA control register 00 (IICCTL00)

Figure 16-22. Arbitration Timing Example

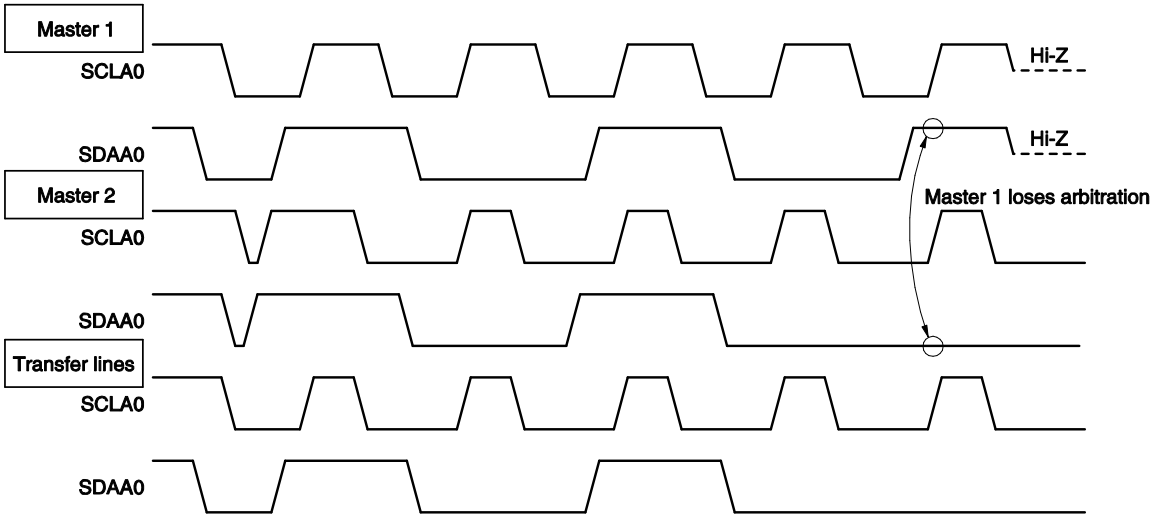

Table 16-4. Status During Arbitration and Interrupt Request Generation Timing

Status During Arbitration	Interrupt Request Generation Timing
During address transmission	At falling edge of eighth or ninth clock following byte transfer Note 1
Read/write data after address transmission	
During extension code transmission	
Read/write data after extension code transmission	
During data transmission	
During $\overline{\text{ACK}}$ transfer period after data transmission	
When restart condition is detected during data transfer	
When stop condition is detected during data transfer	When stop condition is generated (when SPIE0 = 1) Note 2
When data is at low level while attempting to generate a restart condition	At falling edge of eighth or ninth clock following byte transfer Note 1
When stop condition is detected while attempting to generate a restart condition	When stop condition is generated (when SPIE0 = 1) Note 2
When data is at low level while attempting to generate a stop condition	At falling edge of eighth or ninth clock following byte transfer Note 1
When SCLA0 is at low level while attempting to generate a restart condition	

Notes 1. When the WTIM0 bit (bit 3 of IICA control register 00 (IICCTL00)) = 1, an interrupt request occurs at the falling edge of the ninth clock. When WTIM0 = 0 and the extension code's slave address is received, an interrupt request occurs at the falling edge of the eighth clock.

2. When there is a chance that arbitration will occur, set SPIE0 = 1 for master device operation.

Remark SPIE0: Bit 4 of IICA control register 00 (IICCTL00)

16.5.13 Wakeup function

The I²C bus slave function is a function that generates an interrupt request signal (INTIICA0) when a local address and extension code have been received.

This function makes processing more efficient by preventing unnecessary INTIICA0 signal from occurring when addresses do not match.

When a start condition is detected, wakeup standby mode is set. This wakeup standby mode is in effect while addresses are transmitted due to the possibility that an arbitration loss may change the master device (which has generated a start condition) to a slave device.

To use the wakeup function in the STOP mode, set the WUP0 bit to 1. Addresses can be received regardless of the operation clock. An interrupt request signal (INTIICA0) is also generated when a local address and extension code have been received. Operation returns to normal operation by using an instruction to clear (0) the WUP0 bit after this interrupt has been generated.

Figure 16-23 shows the flow for setting WUP0 = 1 and Figure 16-24 shows the flow for setting WUP0 = 0 upon an address match.

Figure 16-23. Flow When Setting WUP0 = 1

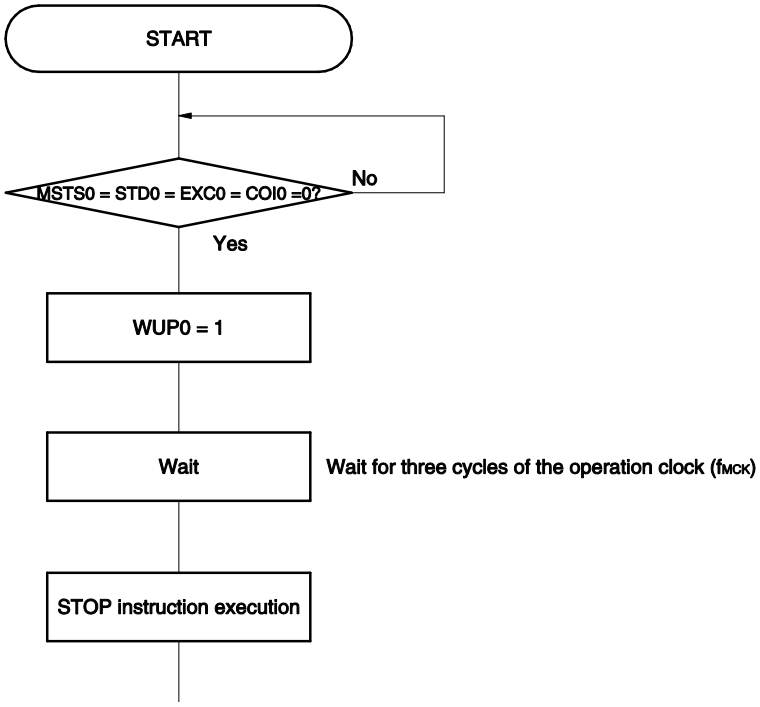

Figure 16-24. Flow When Setting WUP0 = 0 upon Address Match (Including Extension Code Reception)

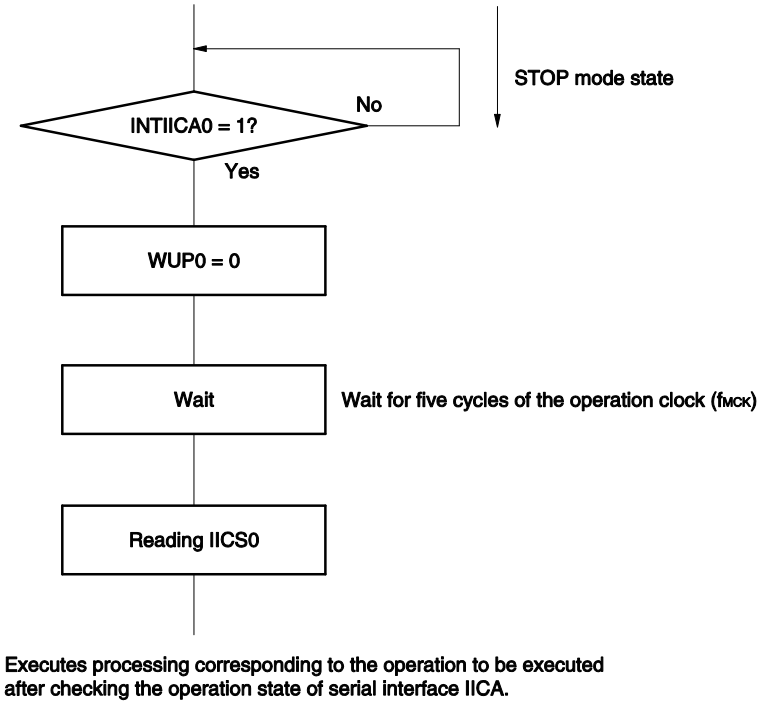

Use the following flows to perform the processing to release the STOP mode other than by an interrupt request (INTIICA0) generated from serial interface IICA.

- Master device operation: Flow shown in Figure 16-25
- Slave device operation: Same as the flow in Figure 16-24. The value of WUP0 must be kept 1 until the INTIICA0 is set to 1.

Figure 16-25. When Operating as Master Device after Releasing STOP Mode other than by INTIICA0

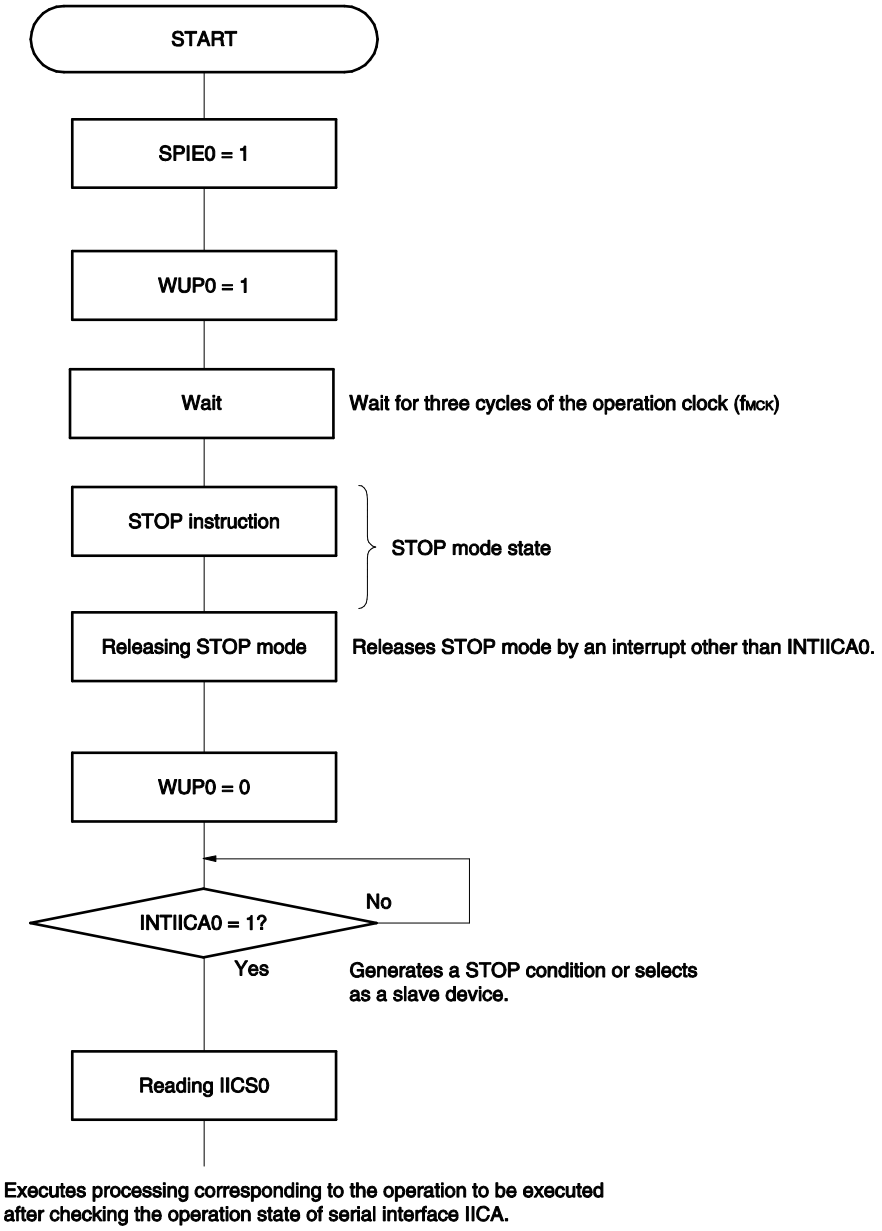

16.5.14 Communication reservation

(1) When communication reservation function is enabled (bit 0 (IICRSV0) of IICA flag register 0 (IICF0) = 0)

To start master device communications when not currently using a bus, a communication reservation can be made to enable transmission of a start condition when the bus is released. There are two modes under which the bus is not used.

- When arbitration results in neither master nor slave operation
- When an extension code is received and slave operation is disabled ($\overline{ACK}$ is not returned and the bus was released by setting bit 6 (LREL0) of IICA control register 00 (IICCTL00) to 1 and saving communication).

If bit 1 (STT0) of the IICCTL00 register is set to 1 while the bus is not used (after a stop condition is detected), a start condition is automatically generated and wait state is set.
If an address is written to the IICA shift register 0 (IICA0) after bit 4 (SPIE0) of the IICCTL00 register was set to 1, and it was detected by generation of an interrupt request signal (INTIICA0) that the bus was released (detection of the stop condition), then the device automatically starts communication as the master. Data written to the IICA0 register before the stop condition is detected is invalid.
When the STT0 bit has been set to 1, the operation mode (as start condition or as communication reservation) is determined according to the bus status.

- If the bus has been released ..... a start condition is generated
- If the bus has not been released (standby mode) ..... communication reservation

Check whether the communication reservation operates or not by using the MSTS0 bit (bit 7 of the IICA status register 0 (IICS0)) after the STT0 bit is set to 1 and the wait time elapses.
Use software to secure the wait time calculated by the following expression.

Wait time from setting STT0 = 1 to checking the MSTS0 flag: (IICWL0 setting value + IICWH0 setting value + 4) / f_{MCK} + $t_F \times 2$

Remark IICWL0: IICA low-level width setting register 0
IICWH0: IICA high-level width setting register 0
t_F: SDAA0 and SCLA0 signal falling times
f_{MCK}: Frequency of the IICA operation clock

Figure 16-26 shows the communication reservation timing.

Figure 16-26. Communication Reservation Timing

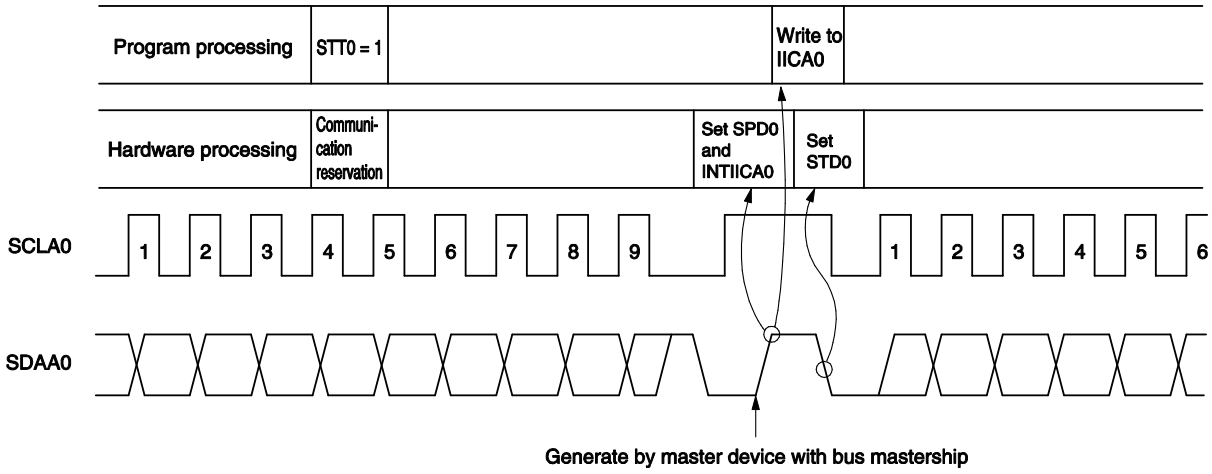

Remark IICA0: IICA shift register 0
STT0: Bit 1 of IICA control register 00 (IICCTL00)
STD0: Bit 1 of IICA status register 0 (IICS0)
SPD0: Bit 0 of IICA status register 0 (IICS0)

Communication reservations are accepted via the timing shown in Figure 16-27. After bit 1 (STD0) of the IICA status register 0 (IICS0) is set to 1, a communication reservation can be made by setting bit 1 (STT0) of IICA control register 00 (IICCTL00) to 1 before a stop condition is detected.

Figure 16-27. Timing for Accepting Communication Reservations

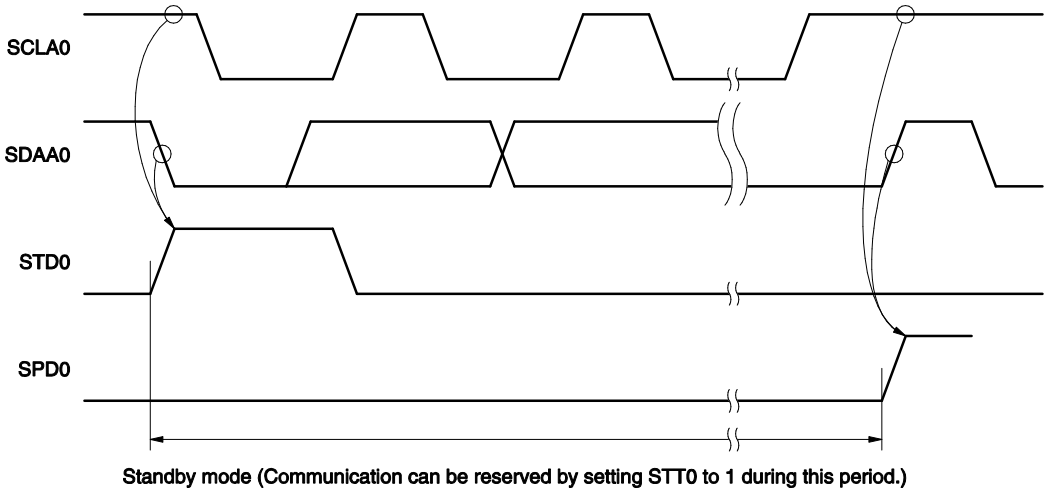

Figure 16-28 shows the communication reservation protocol.

Figure 16-28. Communication Reservation Protocol

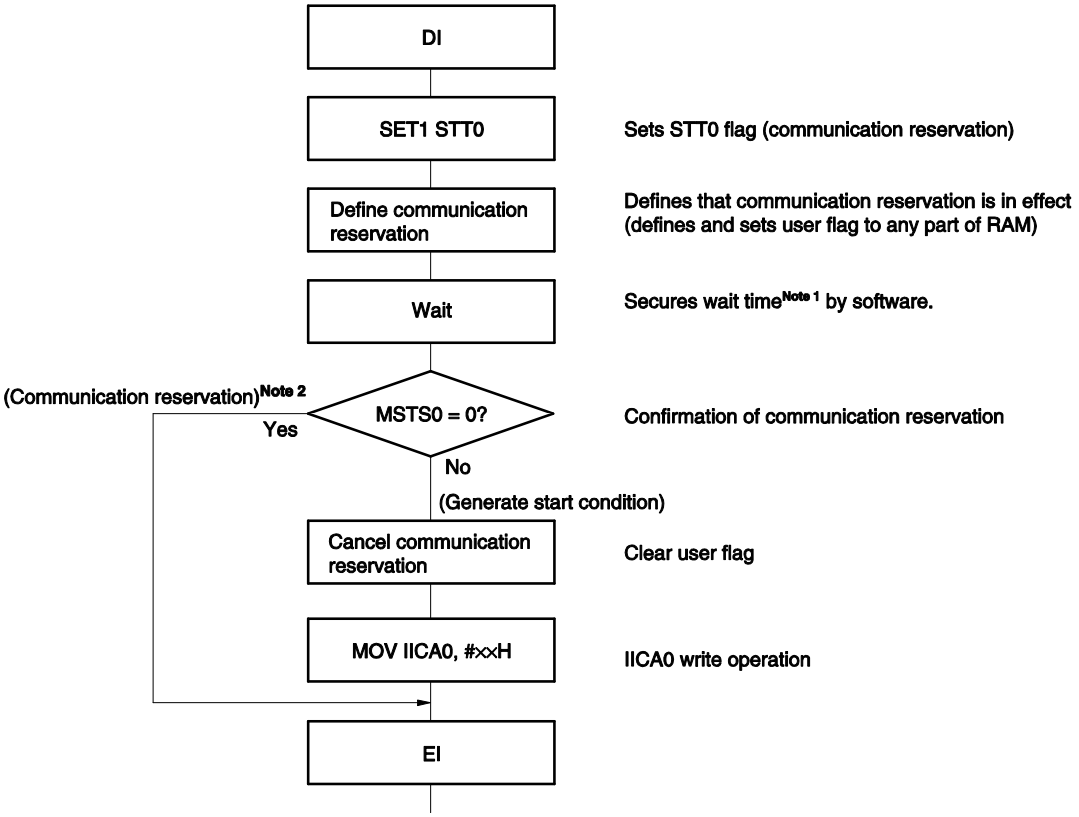

Notes 1. The wait time is calculated as follows.
(IICWL0 setting value + IICWH0 setting value + 4) / f_{MCK} + $t_F \times 2$

2. The communication reservation operation executes a write to the IICA shift register 0 (IICA0) when a stop condition interrupt request occurs.

Remark STT0: Bit 1 of IICA control register 00 (IICCTL00)
MSTS0: Bit 7 of IICA status register 0 (IICS0)
IICA0: IICA shift register 0
IICWL0: IICA low-level width setting register 0
IICWH0: IICA high-level width setting register 0
t_F: SDAA0 and SCLA0 signal falling times
f_{MCK}: Frequency of the IICA operation clock

(2) When communication reservation function is disabled (bit 0 (IICRSV0) of IICA flag register 0 (IICF0) = 1)

When bit 1 (STT0) of IICA control register 00 (IICCTL00) is set to 1 when the bus is not used in a communication during bus communication, this request is rejected and a start condition is not generated. The following two statuses are included in the status where bus is not used.

- When arbitration results in neither master nor slave operation
- When an extension code is received and slave operation is disabled ($\overline{ACK}$ is not returned and the bus was released by setting bit 6 (LREL0) of the IICCTL00 register to 1 and saving communication)

To confirm whether the start condition was generated or request was rejected, check STCF0 (bit 7 of the IICF0 register). It takes up to 5 cycles of the operation clock (f_{MCK}) until the STCF0 bit is set to 1 after setting STT0 = 1. Therefore, secure the time by software.

16.5.15 Cautions

(1) When STCEN0 = 0

Immediately after I²C operation is enabled (IICE0 = 1), the bus communication status (IICBSY0 = 1) is recognized regardless of the actual bus status. When changing from a mode in which no stop condition has been detected to a master device communication mode, first generate a stop condition to release the bus, then perform master device communication.

When using multiple masters, it is not possible to perform master device communication when the bus has not been released (when a stop condition has not been detected).

Use the following sequence for generating a stop condition.

<1> Set IICA control register 01 (IICCTL01).
<2> Set bit 7 (IICE0) of IICA control register 00 (IICCTL00) to 1.
<3> Set bit 0 (SPT0) of the IICCTL00 register to 1.

(2) When STCEN0 = 1

Immediately after I²C operation is enabled (IICE0 = 1), the bus released status (IICBSY0 = 0) is recognized regardless of the actual bus status. To generate the first start condition (STT0 = 1), it is necessary to confirm that the bus has been released, so as to not disturb other communications.

(3) If other I²C communications are already in progress

If I²C operation is enabled and the device participates in communication already in progress when the SDAA0 pin is low and the SCLA0 pin is high, the macro of I²C recognizes that the SDAA0 pin has gone low (detects a start condition). If the value on the bus at this time can be recognized as an extension code, $\overline{\text{ACK}}$ is returned, but this interferes with other I²C communications. To avoid this, start I²C in the following sequence.

<1> Clear bit 4 (SPIE0) of the IICCTL00 register to 0 to disable generation of an interrupt request signal (INTIICA0) when the stop condition is detected.
<2> Set bit 7 (IICE0) of the IICCTL00 register to 1 to enable the operation of I²C.
<3> Wait for detection of the start condition.
<4> Set bit 6 (LREL0) of the IICCTL00 register to 1 before $\overline{\text{ACK}}$ is returned (4 to 80 cycles of the operation clock (f_{MCK}) after setting the IICE0 bit to 1), to forcibly disable detection.

(4) Setting the STT0 and SPT0 bits (bits 1 and 0 of the IICCTL00 register) again after they are set and before they are cleared to 0 is prohibited.

(5) When transmission is reserved, set the SPIE0 bit (bit 4 of the IICTL0 register) to 1 so that an interrupt request is generated when the stop condition is detected. Transfer is started when communication data is written to the IICA shift register 0 (IICA0) after the interrupt request is generated. Unless the interrupt is generated when the stop condition is detected, the device stops in the wait state because the interrupt request is not generated when communication is started. However, it is not necessary to set the SPIE0 bit to 1 when the MSTS0 bit (bit 7 of the IICA status register 0 (IICS0)) is detected by software.

16.5.16 Communication operations

The following shows three operation procedures with the flowchart.

(1) Master operation in single master system

The flowchart when using the RL78/F13 and RL78/F14 as the master in a single master system is shown below.
This flowchart is broadly divided into the initial settings and communication processing. Execute the initial settings at startup. If communication with the slave is required, prepare the communication and then execute communication processing.

(2) Master operation in multimaster system

In the I^2C bus multimaster system, whether the bus is released or used cannot be judged by the I^2C bus specifications when the bus takes part in a communication. Here, when data and clock are at a high level for a certain period (1 frame), the RL78/F13 and RL78/F14 take part in a communication with bus released state.
This flowchart is broadly divided into the initial settings, communication waiting, and communication processing. The processing when the RL78/F13 and RL78/F14 lose in arbitration and is specified as the slave is omitted here, and only the processing as the master is shown. Execute the initial settings at startup to take part in a communication. Then, wait for the communication request as the master or wait for the specification as the slave. The actual communication is performed in the communication processing, and it supports the transmission/reception with the slave and the arbitration with other masters.

(3) Slave operation

An example of when the RL78/F13 and RL78/F14 are used as the I^2C bus slave is shown below.
When used as the slave, operation is started by an interrupt. Execute the initial settings at startup, then wait for the INTIICA0 interrupt occurrence (communication waiting). When an INTIICA0 interrupt occurs, the communication status is judged and its result is passed as a flag over to the main processing.
By checking the flags, necessary communication processing is performed.

(1) Master operation in single-master system

Figure 16-29. Master Operation in Single-Master System

<R>

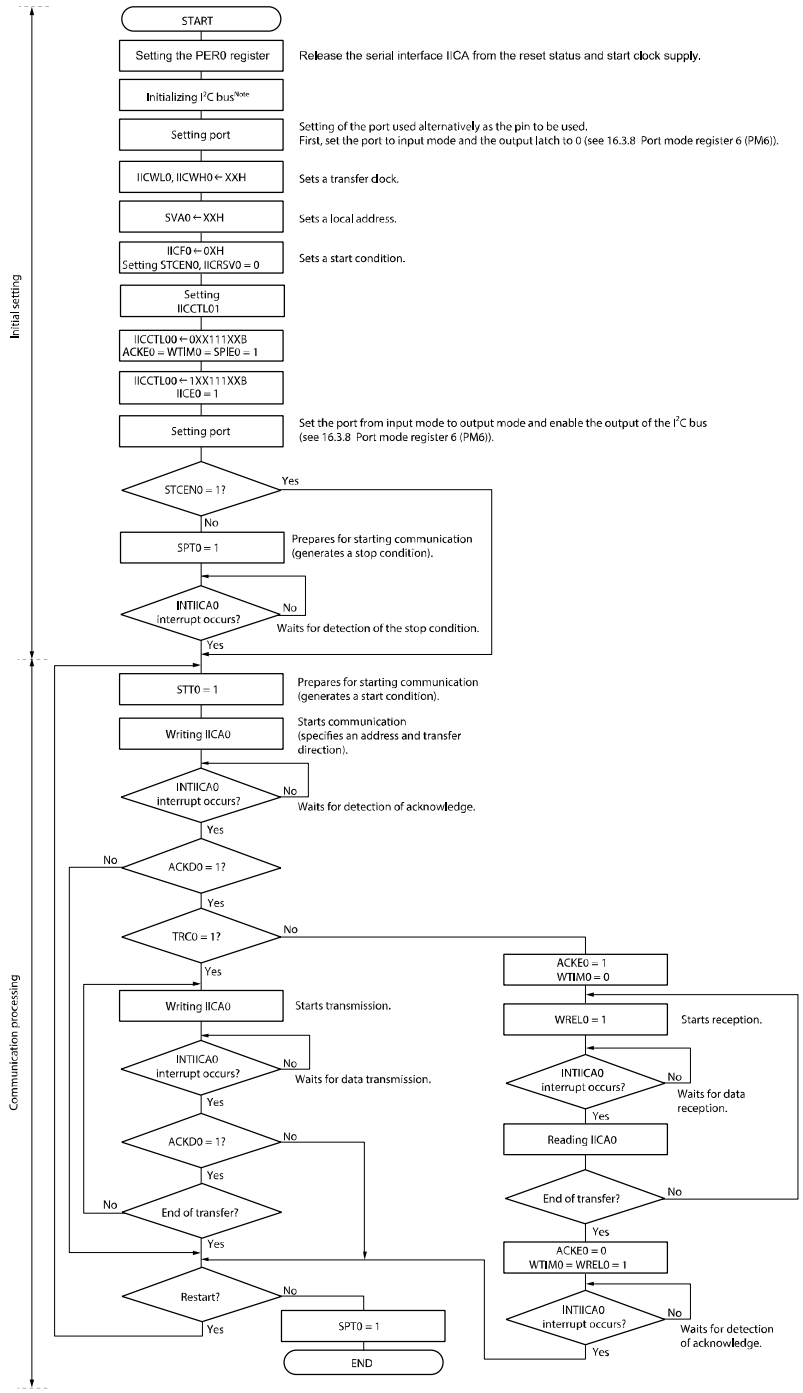

Note Release (SCLA0 and SDAA0 pins = high level) the I²C bus in conformance with the specifications of the product that is communicating. If EEPROM is outputting a low level to the SDAA0 pin, for example, set the SCLA0 pin in the output port mode, and output a clock pulse from the output port until the SDAA0 pin is constantly at high level.

Remark Conform to the specifications of the product that is communicating, with respect to the transmission and reception formats.

(2) Master operation in multi-master system

Figure 16-30. Master Operation in Multi-Master System (1/3)

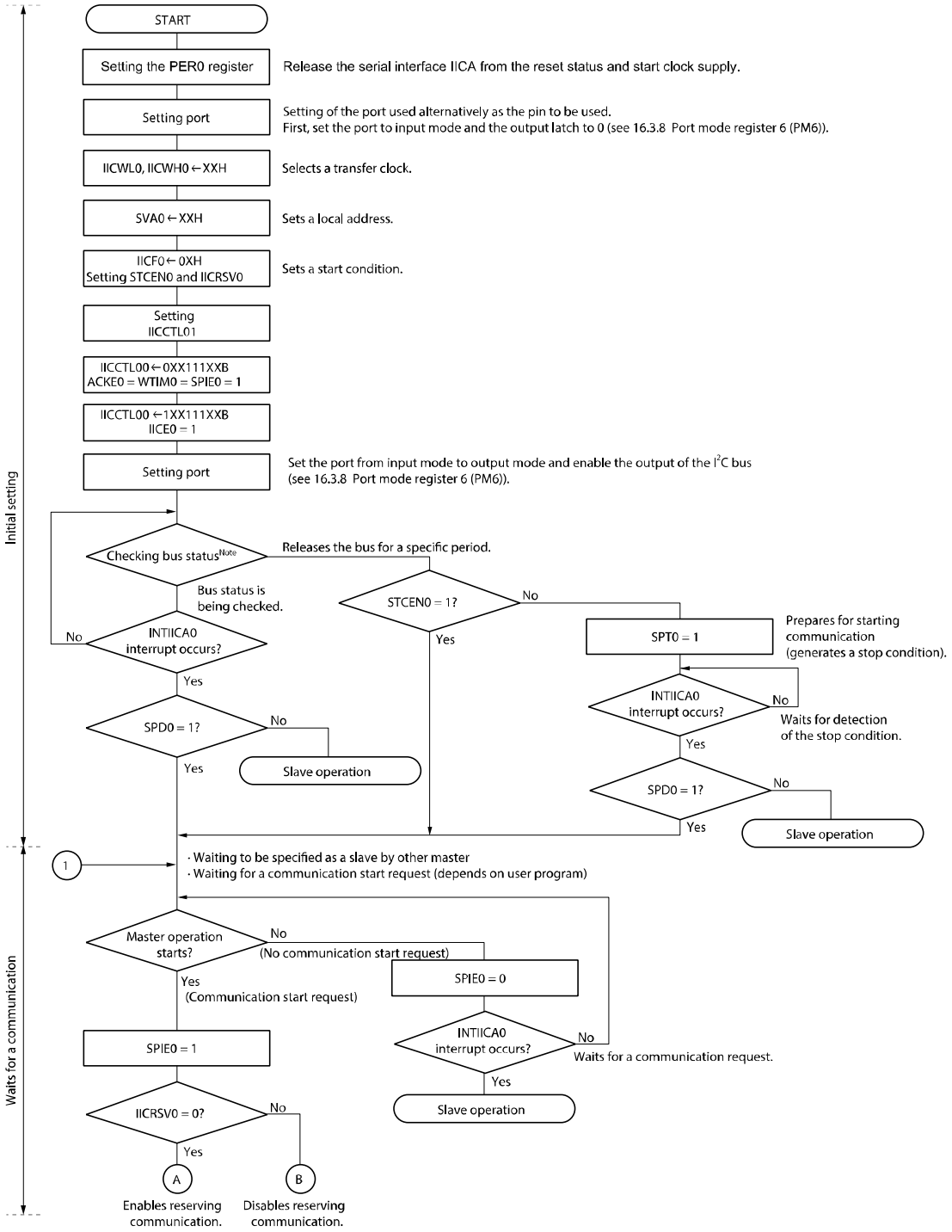

Note Confirm that the bus is released (CLD0 bit = 1, DAD0 bit = 1) for a specific period (for example, for a period of one frame). If the SDAA0 pin is constantly at low level, decide whether to release the I²C bus (SCLA0 and SDAA0 pins = high level) in conformance with the specifications of the product that is communicating.

Figure 16-30. Master Operation in Multi-Master System (2/3)

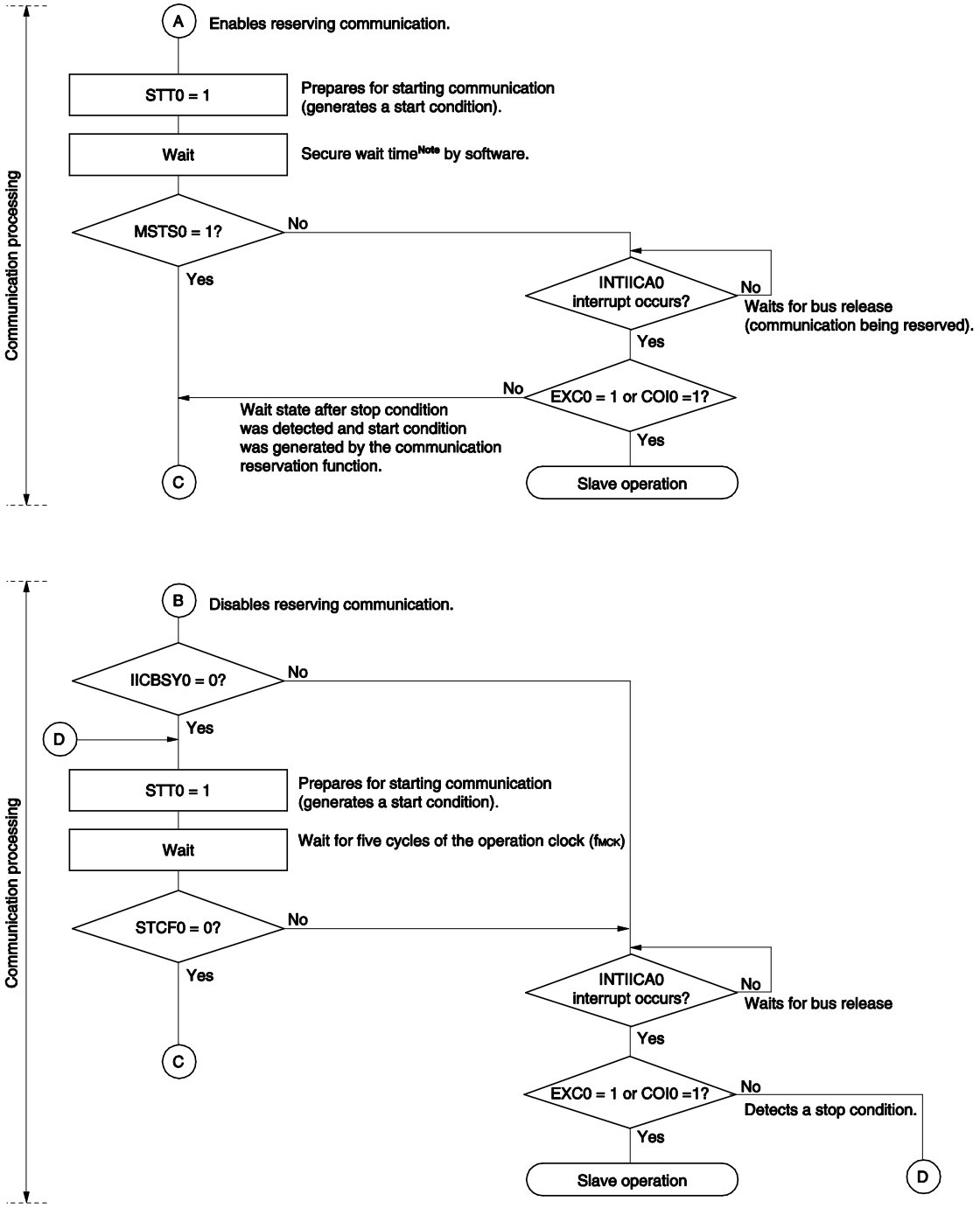

Note The wait time is calculated as follows.

(IICWL0 setting value + IICWH0 setting value + 4) / f_{MCK} + $t_F \times 2$

Remark IICWL0: IICA low-level width setting register 0

IICWH0: IICA high-level width setting register 0

t_F: SDAA0 and SCLA0 signal falling times

f_{MCK}: Frequency of the IICA operation clock

Figure 16-30. Master Operation in Multi-Master System (3/3)

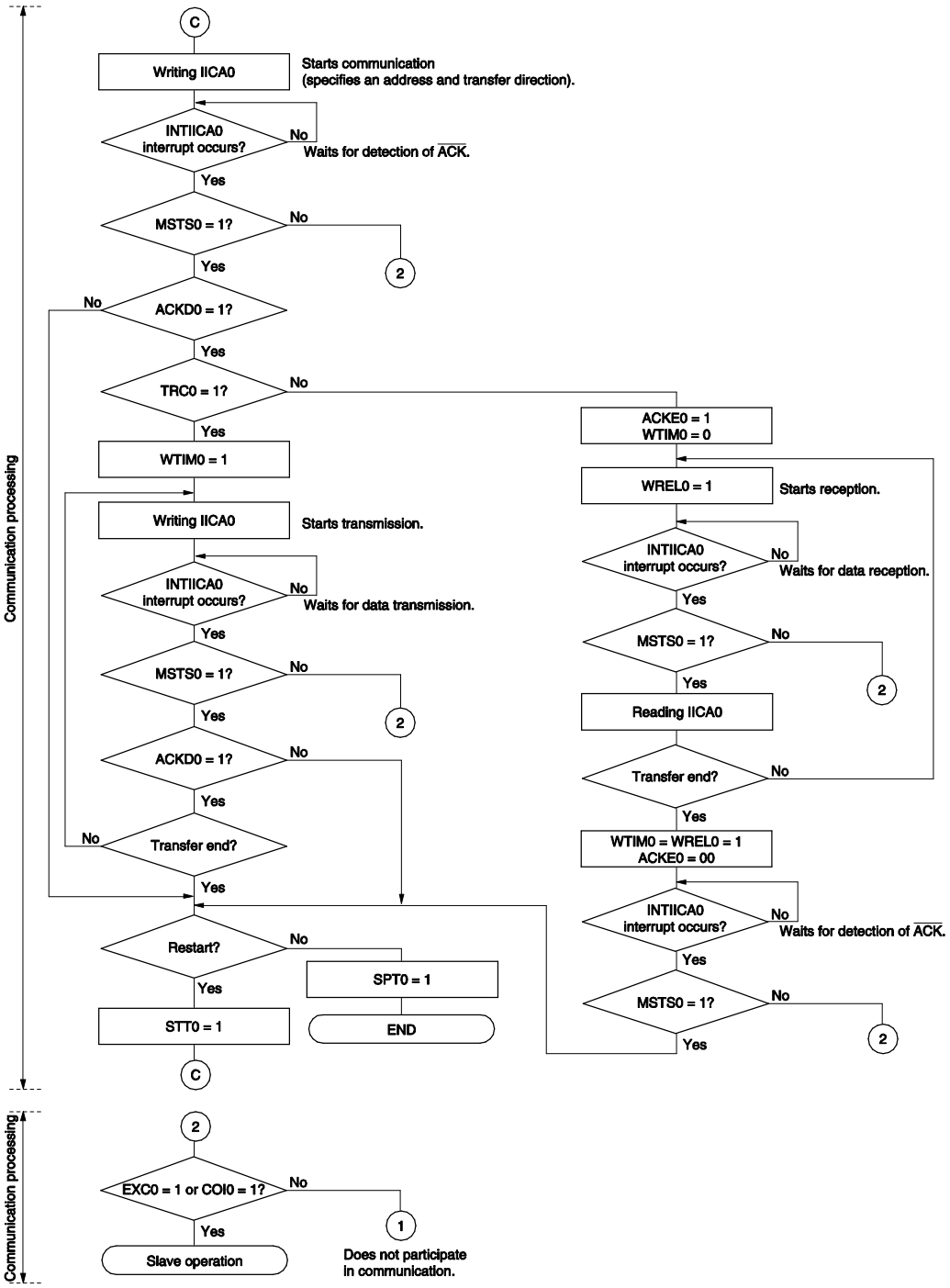

Remarks 1. Conform to the specifications of the product that is communicating, with respect to the transmission and reception formats.

2. To use the device as a master in a multi-master system, read the MSTS0 bit each time interrupt INTIICA0 has occurred to check the arbitration result.

3. To use the device as a slave in a multi-master system, check the status by using the IICA status register 0 (IICS0) and IICA flag register 0 (IICF0) each time interrupt INTIICA0 has occurred, and determine the processing to be performed next.

(3) Slave operation

The processing procedure of the slave operation is as follows.

Basically, the slave operation is event-driven. Therefore, processing by the INTIICA0 interrupt (processing that must substantially change the operation status such as detection of a stop condition during communication) is necessary. In the following explanation, it is assumed that the extension code is not supported for data communication. It is also assumed that the INTIICA0 interrupt servicing only performs status transition processing, and that actual data communication is performed by the main processing.

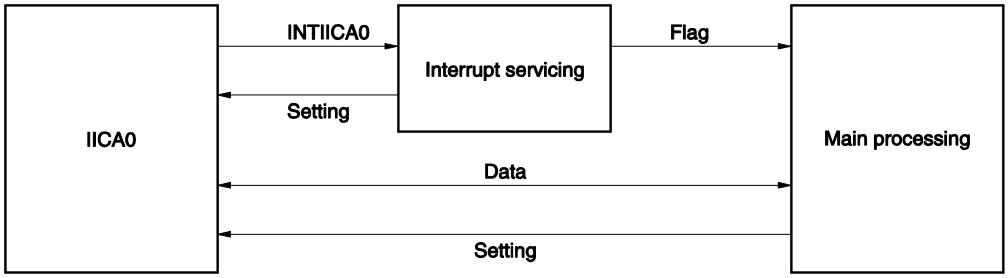

Therefore, data communication processing is performed by preparing the following three flags and passing them to the main processing instead of INTIICA0.

<1> Communication mode flag

This flag indicates the following two communication statuses.

- Clear mode: Status in which data communication is not performed
- Communication mode: Status in which data communication is performed (from valid address detection to stop condition detection, no detection of $\overline{\text{ACK}}$ from master, address mismatch)

<2> Ready flag

This flag indicates that data communication is enabled. Its function is the same as the INTIICA0 interrupt for ordinary data communication. This flag is set by interrupt servicing and cleared by the main processing. Clear this flag by interrupt servicing when communication is started. However, the ready flag is not set by interrupt servicing when the first data is transmitted. Therefore, the first data is transmitted without the flag being cleared (an address match is interpreted as a request for the next data).

<3> Communication direction flag

This flag indicates the direction of communication. Its value is the same as the TRC0 bit.

The main processing of the slave operation is explained next.

Start serial interface IICA and wait until communication is enabled. When communication is enabled, execute communication by using the communication mode flag and ready flag (processing of the stop condition and start condition is performed by an interrupt. Here, check the status by using the flags).

The transmission operation is repeated until the master no longer returns $\overline{\text{ACK}}$. If $\overline{\text{ACK}}$ is not returned from the master, communication is completed.

For reception, the necessary amount of data is received. When communication is completed, $\overline{\text{ACK}}$ is not returned as the next data. After that, the master generates a stop condition or restart condition. Exit from the communication status occurs in this way.

Figure 16-31. Slave Operation Flowchart (1)

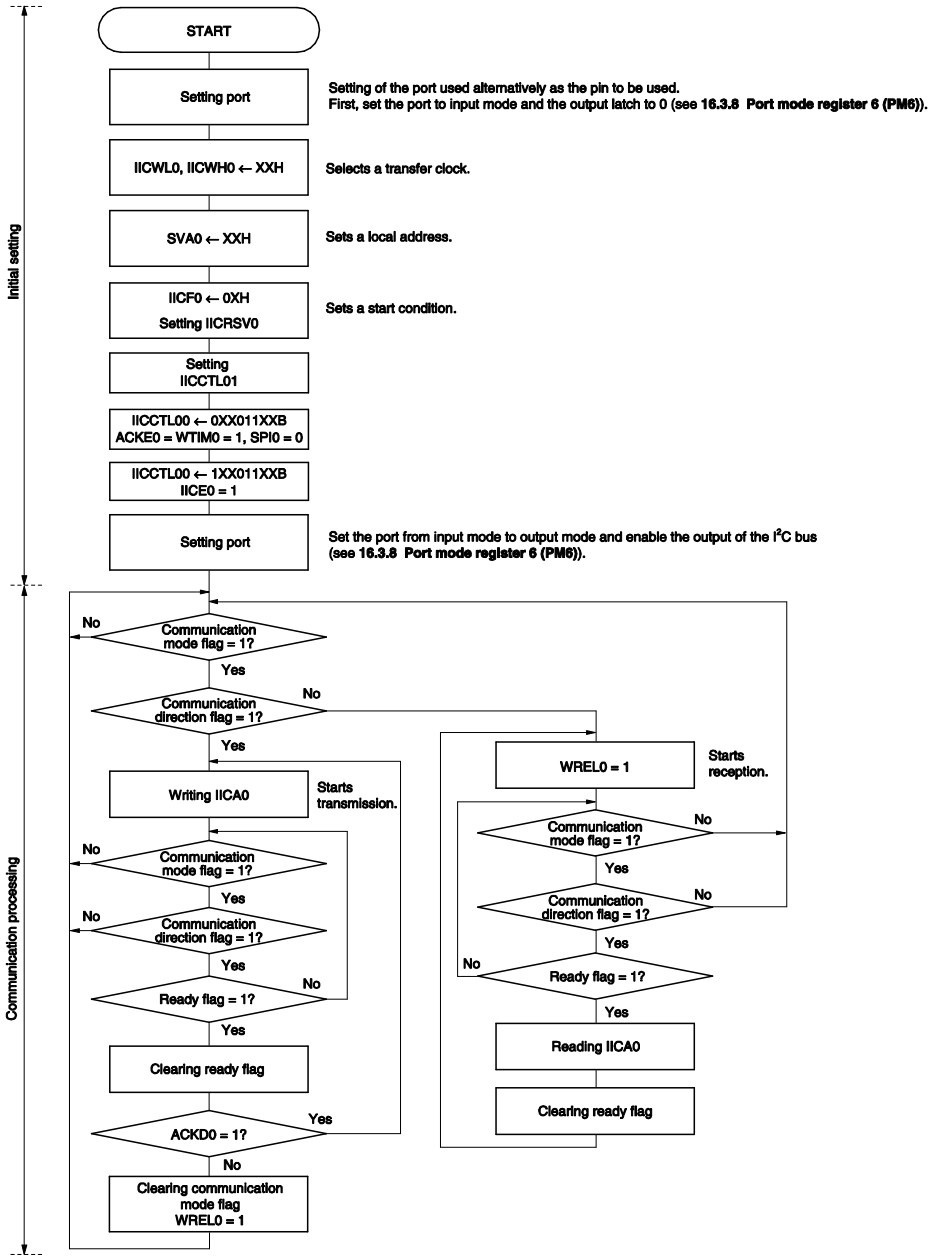

Remark Conform to the specifications of the product that is in communication, regarding the transmission and reception formats.

An example of the processing procedure of the slave with the INTIICA0 interrupt is explained below (processing is performed assuming that no extension code is used). The INTIICA0 interrupt checks the status, and the following operations are performed.

<1> Communication is stopped if the stop condition is issued.
<2> If the start condition is issued, the address is checked and communication is completed if the address does not match. If the address matches, the communication mode is set, wait is cancelled, and processing returns from the interrupt (the ready flag is cleared).
<3> For data transmit/receive, only the ready flag is set. Processing returns from the interrupt with the I²C bus remaining in the wait state.

Remark <1> to <3> above correspond to <1> to <3> in Figure 16-31 Slave Operation Flowchart (2).

Figure 16-31. Slave Operation Flowchart (2)

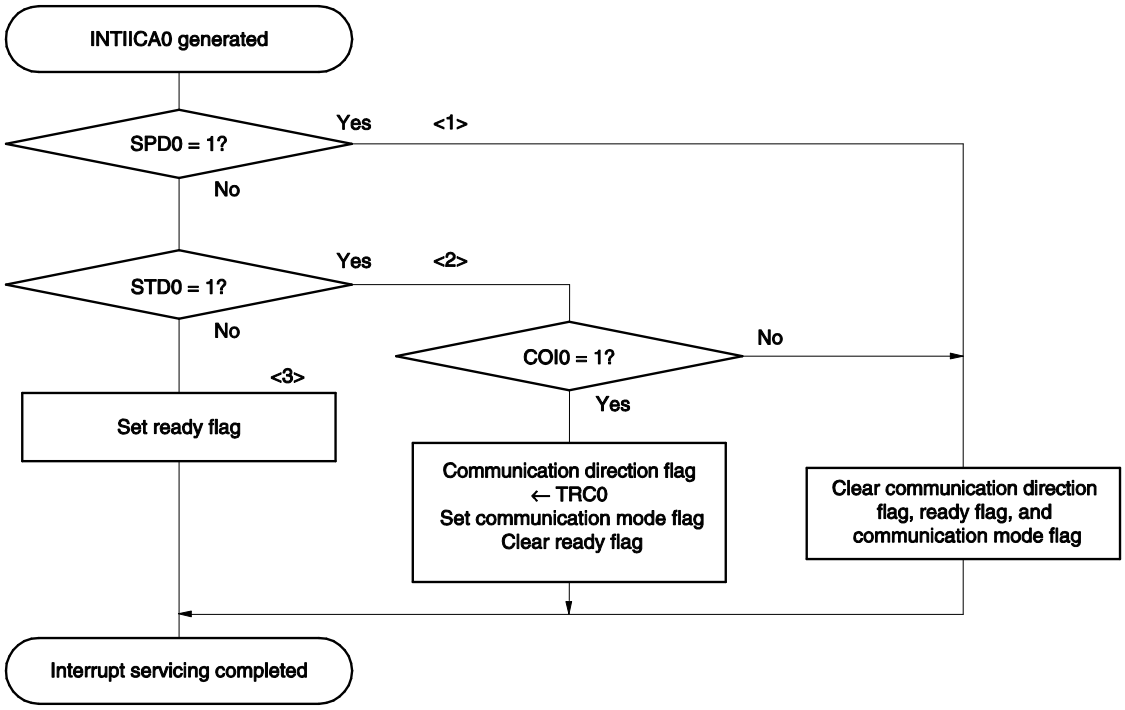

16.5.17 Timing of I²C interrupt request (INTIICA0) occurrence

The timing of transmitting or receiving data and generation of interrupt request signal INTIICA0, and the value of the IICA status register 0 (IICS0) when the INTIICA0 signal is generated are shown below.

Remark

ST:	Start condition
AD6 to AD0:	Address
R/$\overline{W}$:	Transfer direction specification
$\overline{ACK}$:	Acknowledge
D7 to D0:	Data
SP:	Stop condition

(1) Master device operation

(a) Start ~ Address ~ Data ~ Data ~ Stop (transmission/reception)

(i) When WTIM0 = 0

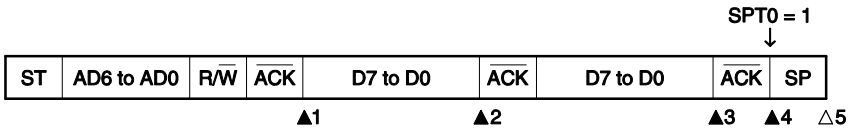

▲1: IICS0 = 1000×110B
▲2: IICS0 = 1000×000B
▲3: IICS0 = 1000×000B (Sets the WTIM0 bit to 1)[Note]
▲4: IICS0 = 1000××00B (Sets the SPT0 bit to 1)[Note]
△5: IICS0 = 00000001B

Note To generate a stop condition, set the WTIM0 bit to 1 and change the timing for generating the INTIICA0 interrupt request signal.

Remark ▲: Always generated
△: Generated only when SPIE0 = 1
×: Don't care

(ii) When WTIM0 = 1

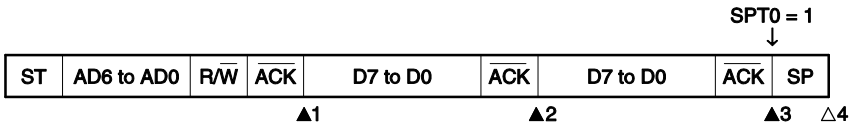

▲1: IICS0 = 1000×110B
▲2: IICS0 = 1000×100B
▲3: IICS0 = 1000××00B (Sets the SPT0 bit to 1)
△4: IICS0 = 00000001B

Remark ▲: Always generated
△: Generated only when SPIE0 = 1
×: Don't care

(b) Start ~ Address ~ Data ~ Start ~ Address ~ Data ~ Stop (restart)

(i) When WTIM0 = 0

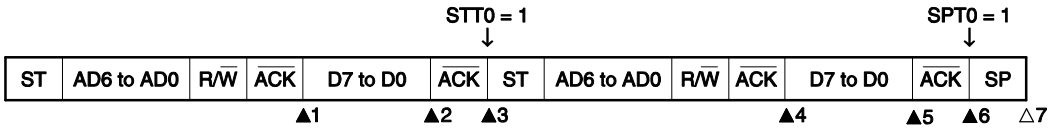

▲1: IICS0 = 1000×110B
▲2: IICS0 = 1000×000B (Sets the WTIM0 bit to 1)[Note 1]
▲3: IICS0 = 1000××00B (Clears the WTIM0 bit to 0[Note 2], sets the STT0 bit to 1)
▲4: IICS0 = 1000×110B
▲5: IICS0 = 1000×000B (Sets the WTIM0 bit to 1)[Note 3]
▲6: IICS0 = 1000××00B (Sets the SPT0 bit to 1)
△7: IICS0 = 00000001B

Notes 1. To generate a start condition, set the WTIM0 bit to 1 and change the timing for generating the INTIICA0 interrupt request signal.
2. Clear the WTIM0 bit to 0 to restore the original setting.
3. To generate a stop condition, set the WTIM0 bit to 1 and change the timing for generating the INTIICA0 interrupt request signal.

Remark ▲: Always generated
△: Generated only when SPIE0 = 1
×: Don't care

(ii) When WTIM0 = 1

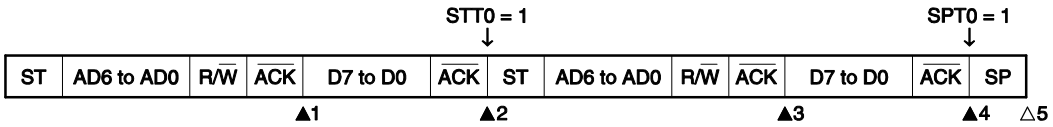

▲1: IICS0 = 1000×110B
▲2: IICS0 = 1000××00B (Sets the STT0 bit to 1)
▲3: IICS0 = 1000×110B
▲4: IICS0 = 1000××00B (Sets the SPT0 bit to 1)
△5: IICS0 = 00000001B

Remark ▲: Always generated
△: Generated only when SPIE0 = 1
×: Don't care

(c) Start ~ Code ~ Data ~ Data ~ Stop (extension code transmission)

(i) When WTIM0 = 0

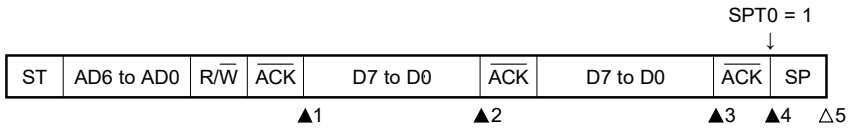

▲1: IICS0 = 1010×110B
▲2: IICS0 = 1010×000B
▲3: IICS0 = 1010×000B (Sets the WTIM0 bit to 1)[Note]
▲4: IICS0 = 1010××00B (Sets the SPT0 bit to 1)
△5: IICS0 = 00000001B

Note To generate a stop condition, set the WTIM0 bit to 1 and change the timing for generating the INTIICA0 interrupt request signal.

Remark ▲: Always generated
△: Generated only when SPIE0 = 1
×: Don’t care

(ii) When WTIM0 = 1

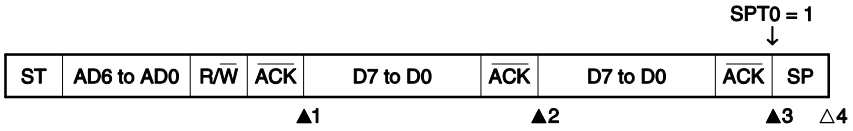

▲1: IICS0 = 1010×110B
▲2: IICS0 = 1010×100B
▲3: IICS0 = 1010××00B (Sets the SPT0 bit to 1)
△4: IICS0 = 00001001B

Remark ▲: Always generated
△: Generated only when SPIE0 = 1
×: Don’t care

(2) Slave device operation (slave address data reception)

(a) Start ~ Address ~ Data ~ Data ~ Stop

(i) When WTIM0 = 0

ST	AD6 to AD0	R/$\overline{W}$	$\overline{ACK}$	D7 to D0	$\overline{ACK}$	D7 to D0	$\overline{ACK}$	SP
				▲1	▲2		▲3	△4

▲1: IICS0 = 0001×110B
▲2: IICS0 = 0001×000B
▲3: IICS0 = 0001×000B
△4: IICS0 = 00000001B

Remark ▲: Always generated
△: Generated only when SPIE0 = 1
×: Don't care

(ii) When WTIM0 = 1

ST	AD6 to AD0	R/$\overline{W}$	$\overline{ACK}$	D7 to D0	$\overline{ACK}$	D7 to D0	$\overline{ACK}$	SP
				▲1		▲2	▲3	△4

▲1: IICS0 = 0001×110B
▲2: IICS0 = 0001×100B
▲3: IICS0 = 0001××00B
△4: IICS0 = 00000001B

Remark ▲: Always generated
△: Generated only when SPIE0 = 1
×: Don't care

(b) Start ~ Address ~ Data ~ Start ~ Address ~ Data ~ Stop

(i) When WTIM0 = 0 (after restart, matches with SVA0)

ST	AD6 to AD0	R/$\overline{W}$	$\overline{ACK}$	D7 to D0	$\overline{ACK}$	ST	AD6 to AD0	R/$\overline{W}$	$\overline{ACK}$	D7 to D0	$\overline{ACK}$	SP
				▲1	▲2					▲3	▲4	△5

▲1: IICS0 = 0001×110B
▲2: IICS0 = 0001×000B
▲3: IICS0 = 0001×110B
▲4: IICS0 = 0001×000B
△5: IICS0 = 00000001B

Remark ▲: Always generated
△: Generated only when SPIE0 = 1
×: Don't care

(ii) When WTIM0 = 1 (after restart, matches with SVA0)

ST	AD6 to AD0	R/$\overline{W}$	$\overline{ACK}$	D7 to D0	$\overline{ACK}$	ST	AD6 to AD0	R/$\overline{W}$	$\overline{ACK}$	D7 to D0	$\overline{ACK}$	SP
				▲1		▲2				▲3	▲4	△5

▲1: IICS0 = 0001×110B
▲2: IICS0 = 0001××00B
▲3: IICS0 = 0001×110B
▲4: IICS0 = 0001××00B
△5: IICS0 = 00000001B

Remark ▲: Always generated
△: Generated only when SPIE0 = 1
×: Don't care

(c) Start ~ Address ~ Data ~ Start ~ Code ~ Data ~ Stop

(i) When WTIM0 = 0 (after restart, does not match address (= extension code))

ST	AD6 to AD0	R/$\overline{W}$	$\overline{ACK}$	D7 to D0	$\overline{ACK}$	ST	AD6 to AD0	R/$\overline{W}$	$\overline{ACK}$	D7 to D0	$\overline{ACK}$	SP
				▲1	▲2				▲3		▲4	△5

▲1: IICS0 = 0001×110B
▲2: IICS0 = 0001×000B
▲3: IICS0 = 0010×010B
▲4: IICS0 = 0010×000B
△5: IICS0 = 00000001B

Remark ▲: Always generated
△: Generated only when SPIE0 = 1
×: Don't care

(ii) When WTIM0 = 1 (after restart, does not match address (= extension code))

ST	AD6 to AD0	R/$\overline{W}$	$\overline{ACK}$	D7 to D0	$\overline{ACK}$	ST	AD6 to AD0	R/$\overline{W}$	$\overline{ACK}$	D7 to D0	$\overline{ACK}$	SP
				▲1		▲2			▲3	▲4		▲5 △6

▲1: IICS0 = 0001×110B
▲2: IICS0 = 0001××00B
▲3: IICS0 = 0010×010B
▲4: IICS0 = 0010×110B
▲5: IICS0 = 0010××00B
△6: IICS0 = 00000001B

Remark ▲: Always generated
△: Generated only when SPIE0 = 1
×: Don't care

(d) Start ~ Address ~ Data ~ Start ~ Address ~ Data ~ Stop

(i) When WTIM0 = 0 (after restart, does not match address (= not extension code))

ST	AD6 to AD0	R/$\overline{W}$	$\overline{ACK}$	D7 to D0	$\overline{ACK}$	ST	AD6 to AD0	R/$\overline{W}$	$\overline{ACK}$	D7 to D0	$\overline{ACK}$	SP
				▲1	▲2					▲3		△4

▲1: IICS0 = 0001×110B
▲2: IICS0 = 0001×000B
▲3: IICS0 = 00000×10B
△4: IICS0 = 00000001B

Remark ▲: Always generated
△: Generated only when SPIE0 = 1
×: Don't care

(ii) When WTIM0 = 1 (after restart, does not match address (= not extension code))

ST	AD6 to AD0	R/$\overline{W}$	$\overline{ACK}$	D7 to D0	$\overline{ACK}$	ST	AD6 to AD0	R/$\overline{W}$	$\overline{ACK}$	D7 to D0	$\overline{ACK}$	SP
				▲1		▲2				▲3		△4

▲1: IICS0 = 0001×110B
▲2: IICS0 = 0001××00B
▲3: IICS0 = 00000×10B
△4: IICS0 = 00000001B

Remark ▲: Always generated
△: Generated only when SPIE0 = 1
×: Don't care

(3) Slave device operation (when receiving extension code)

The device is always participating in communication when it receives an extension code.

(a) Start ~ Code ~ Data ~ Data ~ Stop

(i) When WTIM0 = 0

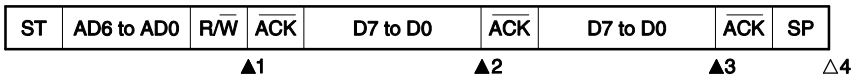

▲1: IICS0 = 0010×010B
▲2: IICS0 = 0010×000B
▲3: IICS0 = 0010×000B
△4: IICS0 = 00000001B

Remark ▲: Always generated
△: Generated only when SPIE0 = 1
×: Don't care

(ii) When WTIM0 = 1

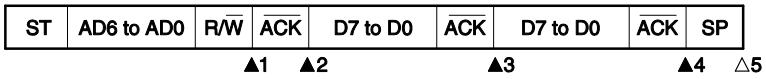

▲1: IICS0 = 0010×010B
▲2: IICS0 = 0010×110B
▲3: IICS0 = 0010×100B
▲4: IICS0 = 0010××00B
△5: IICS0 = 00000001B

Remark ▲: Always generated
△: Generated only when SPIE0 = 1
×: Don't care

(b) Start ~ Code ~ Data ~ Start ~ Address ~ Data ~ Stop

(i) When WTIM0 = 0 (after restart, matches SVA0)

ST	AD6 to AD0	R/$\overline{W}$	$\overline{ACK}$	D7 to D0	$\overline{ACK}$	ST	AD6 to AD0	R/$\overline{W}$	$\overline{ACK}$	D7 to D0	$\overline{ACK}$	SP
			▲1		▲2					▲3	▲4	△5

▲1: IICS0 = 0010×010B
▲2: IICS0 = 0010×000B
▲3: IICS0 = 0001×110B
▲4: IICS0 = 0001×000B
△5: IICS0 = 00000001B

Remark ▲: Always generated
△: Generated only when SPIE0 = 1
×: Don't care

(ii) When WTIM0 = 1 (after restart, matches SVA0)

ST	AD6 to AD0	R/$\overline{W}$	$\overline{ACK}$	D7 to D0	$\overline{ACK}$	ST	AD6 to AD0	R/$\overline{W}$	$\overline{ACK}$	D7 to D0	$\overline{ACK}$	SP
			▲1	▲2		▲3				▲4	▲5	△6

▲1: IICS0 = 0010×010B
▲2: IICS0 = 0010×110B
▲3: IICS0 = 0010××00B
▲4: IICS0 = 0001×110B
▲5: IICS0 = 0001××00B
△6: IICS0 = 00000001B

Remark ▲: Always generated
△: Generated only when SPIE0 = 1
×: Don't care

(c) Start ~ Code ~ Data ~ Start ~ Code ~ Data ~ Stop

(i) When WTIM0 = 0 (after restart, extension code reception)

ST	AD6 to AD0	R/$\overline{W}$	$\overline{ACK}$	D7 to D0	$\overline{ACK}$	ST	AD6 to AD0	R/$\overline{W}$	$\overline{ACK}$	D7 to D0	$\overline{ACK}$	SP
			▲1		▲2				▲3		▲4	△5

▲1: IICS0 = 0010×010B
▲2: IICS0 = 0010×000B
▲3: IICS0 = 0010×010B
▲4: IICS0 = 0010×000B
△5: IICS0 = 00000001B

Remark ▲: Always generated
△: Generated only when SPIE0 = 1
×: Don't care

(ii) When WTIM0 = 1 (after restart, extension code reception)

ST	AD6 to AD0	R/$\overline{W}$	$\overline{ACK}$	D7 to D0	$\overline{ACK}$	ST	AD6 to AD0	R/$\overline{W}$	$\overline{ACK}$	D7 to D0	$\overline{ACK}$	SP
			▲1	▲2		▲3			▲4	▲5	▲6	△7

▲1: IICS0 = 0010×010B
▲2: IICS0 = 0010×110B
▲3: IICS0 = 0010××00B
▲4: IICS0 = 0010×010B
▲5: IICS0 = 0010×110B
▲6: IICS0 = 0010××00B
△7: IICS0 = 00000001B

Remark ▲: Always generated
△: Generated only when SPIE0 = 1
×: Don't care

(d) Start ~ Code ~ Data ~ Start ~ Address ~ Data ~ Stop

(i) When WTIM0 = 0 (after restart, does not match address (= not extension code))

ST	AD6 to AD0	R/$\overline{W}$	$\overline{ACK}$	D7 to D0	$\overline{ACK}$	ST	AD6 to AD0	R/$\overline{W}$	$\overline{ACK}$	D7 to D0	$\overline{ACK}$	SP
			▲1		▲2					▲3		△4

▲1: IICS0 = 0010×010B
▲2: IICS0 = 0010×000B
▲3: IICS0 = 00000×10B
△4: IICS0 = 00000001B

Remark ▲: Always generated
△: Generated only when SPIE0 = 1
×: Don't care

(ii) When WTIM0 = 1 (after restart, does not match address (= not extension code))

ST	AD6 to AD0	R/$\overline{W}$	$\overline{ACK}$	D7 to D0	$\overline{ACK}$	ST	AD6 to AD0	R/$\overline{W}$	$\overline{ACK}$	D7 to D0	$\overline{ACK}$	SP
			▲1	▲2		▲3				▲4		△5

▲1: IICS0 = 0010×010B
▲2: IICS0 = 0010×110B
▲3: IICS0 = 0010××00B
▲4: IICS0 = 00000×10B
△5: IICS0 = 00000001B

Remark ▲: Always generated
△: Generated only when SPIE0 = 1
×: Don't care

(4) Operation without communication

(a) Start ~ Code ~ Data ~ Data ~ Stop

ST	AD6 to AD0	R/$\overline{W}$	$\overline{ACK}$	D7 to D0	$\overline{ACK}$	D7 to D0	$\overline{ACK}$	SP
								△1

△1: IICS0 = 00000001B

Remark △: Generated only when SPIE0 = 1

(5) Arbitration loss operation (operation as slave after arbitration loss)

When the device is used as a master in a multi-master system, read the MSTS0 bit each time interrupt request signal INTIICA0 has occurred to check the arbitration result.

(a) When arbitration loss occurs during transmission of slave address data

(i) When WTIM0 = 0

ST	AD6 to AD0	R/$\overline{W}$	$\overline{ACK}$	D7 to D0	$\overline{ACK}$	D7 to D0	$\overline{ACK}$	SP
			▲1		▲2		▲3	△4

▲1: IICS0 = 0101×110B
▲2: IICS0 = 0001×000B
▲3: IICS0 = 0001×000B
△4: IICS0 = 00000001B

Remark ▲: Always generated
△: Generated only when SPIE0 = 1
×: Don't care

(ii) When WTIM0 = 1

ST	AD6 to AD0	R/$\overline{W}$	$\overline{ACK}$	D7 to D0	$\overline{ACK}$	D7 to D0	$\overline{ACK}$	SP
			▲1		▲2		▲3	△4

▲1: IICS0 = 0101×110B
▲2: IICS0 = 0001×100B
▲3: IICS0 = 0001××00B
△4: IICS0 = 00000001B

Remark ▲: Always generated
△: Generated only when SPIE0 = 1
×: Don't care

(b) When arbitration loss occurs during transmission of extension code

(i) When WTIM0 = 0

ST	AD6 to AD0	R/$\overline{W}$	$\overline{ACK}$	D7 to D0	$\overline{ACK}$	D7 to D0	$\overline{ACK}$	SP
			▲1		▲2		▲3	△4

▲1: IICS0 = 0110×010B
▲2: IICS0 = 0010×000B
▲3: IICS0 = 0010×000B
△4: IICS0 = 00000001B

Remark ▲: Always generated
△: Generated only when SPIE0 = 1
×: Don't care

(ii) When WTIM0 = 1

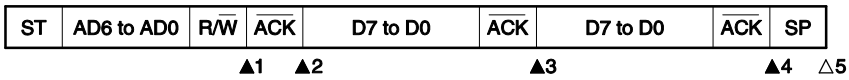

▲1: IICS0 = 0110×010B
▲2: IICS0 = 0010×110B
▲3: IICS0 = 0010×100B
▲4: IICS0 = 0010××00B
△5: IICS0 = 00000001B

Remark ▲: Always generated
△: Generated only when SPIE0 = 1
×: Don't care

(6) Operation when arbitration loss occurs (no communication after arbitration loss)

When the device is used as a master in a multi-master system, read the MSTS0 bit each time interrupt request signal INTIICA0 has occurred to check the arbitration result.

(a) When arbitration loss occurs during transmission of slave address data (when WTIM0 = 1)

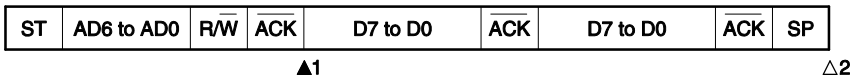

▲1: IICS0 = 01000110B
△2: IICS0 = 00000001B

Remark ▲: Always generated
△: Generated only when SPIE0 = 1

(b) When arbitration loss occurs during transmission of extension code

ST	AD6 to AD0	R/$\overline{W}$	$\overline{ACK}$	D7 to D0	$\overline{ACK}$	D7 to D0	$\overline{ACK}$	SP
			▲1					△2

▲1: IICS0 = 0110×010B
Sets LREL0 = 1 by software
△2: IICS0 = 00000001B

Remark ▲: Always generated
△: Generated only when SPIE0 = 1
×: Don't care

(c) When arbitration loss occurs during transmission of data

(i) When WTIM0 = 0

ST	AD6 to AD0	R/$\overline{W}$	$\overline{ACK}$	D7 to D0	$\overline{ACK}$	D7 to D0	$\overline{ACK}$	SP
				▲1	▲2			△3

▲1: IICS0 = 10001110B
▲2: IICS0 = 01000000B
△3: IICS0 = 00000001B

Remark ▲: Always generated
△: Generated only when SPIE0 = 1

(ii) When WTIM0 = 1

ST	AD6 to AD0	R/$\overline{W}$	$\overline{ACK}$	D7 to D0	$\overline{ACK}$	D7 to D0	$\overline{ACK}$	SP
			▲1		▲2			△3

▲1: IICS0 = 10001110B
▲2: IICS0 = 01000100B
△3: IICS0 = 00000001B

Remark ▲: Always generated
△: Generated only when SPIE0 = 1

(d) When loss occurs due to restart condition during data transfer

(i) Not extension code (Example: unmatches with SVA0)

ST	AD6 to AD0	R/$\overline{W}$	$\overline{ACK}$	D7 to Dn	ST	AD6 to AD0	R/$\overline{W}$	$\overline{ACK}$	D7 to D0	$\overline{ACK}$	SP
				▲1					▲2		△3

▲1: IICS0 = 1000×110B
▲2: IICS0 = 01000110B
△3: IICS0 = 00000001B

Remark ▲: Always generated
△: Generated only when SPIE0 = 1
×: Don’t care
n = 6 to 0

(ii) Extension code

ST	AD6 to AD0	R/$\overline{W}$	$\overline{ACK}$	D7 to Dn	ST	AD6 to AD0	R/$\overline{W}$	$\overline{ACK}$	D7 to D0	$\overline{ACK}$	SP
				▲1				▲2			△3

▲1: IICS0 = 1000×110B
▲2: IICS0 = 01100010B
Sets LREL0 = 1 by software
△3: IICS0 = 00000001B

Remark ▲: Always generated
△: Generated only when SPIE0 = 1
×: Don't care
n = 6 to 0

(e) When loss occurs due to stop condition during data transfer

ST	AD6 to AD0	R/$\overline{W}$	$\overline{ACK}$	D7 to Dn	SP
				▲1	△2

▲1: IICS0 = 10000110B
△2: IICS0 = 01000001B

Remark ▲: Always generated
△: Generated only when SPIE0 = 1
×: Don't care
n = 6 to 0

(f) When arbitration loss occurs due to low-level data when attempting to generate a restart condition

(i) When WTIM0 = 0

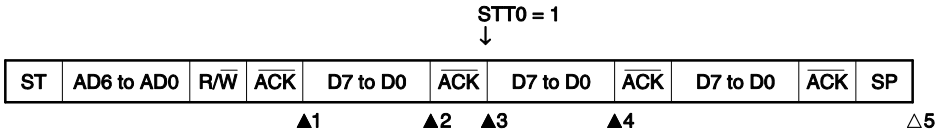

▲1: IICS0 = 1000×110B
▲2: IICS0 = 1000×000B (Sets the WTIM0 bit to 1)
▲3: IICS0 = 1000×100B (Clears the WTIM0 bit to 0)
▲4: IICS0 = 01000000B
△5: IICS0 = 00000001B

Remark ▲: Always generated
△: Generated only when SPIE0 = 1
×: Don't care

(ii) When WTIM0 = 1

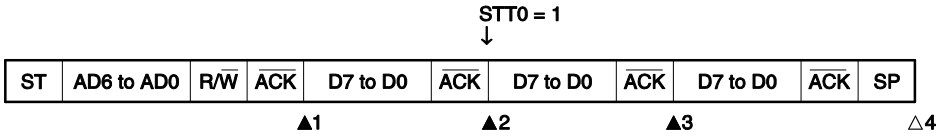

▲1: IICS0 = 1000×110B
▲2: IICS0 = 1000×100B (Sets the STT0 bit to 1)
▲3: IICS0 = 01000100B
△4: IICS0 = 00000001B

Remark ▲: Always generated
△: Generated only when SPIE0 = 1
×: Don't care

(g) When arbitration loss occurs due to a stop condition when attempting to generate a restart condition

(i) When WTIM0 = 0

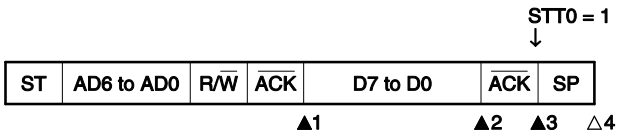

▲1: IICS0 = 1000×110B
▲2: IICS0 = 1000×000B (Sets the WTIM0 bit to 1)
▲3: IICS0 = 1000××00B (Sets the STT0 bit to 1)
△4: IICS0 = 01000001B

Remark ▲: Always generated
△: Generated only when SPIE0 = 1
×: Don't care

(ii) When WTIM0 = 1

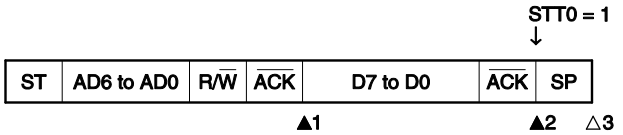

▲1: IICS0 = 1000×110B
▲2: IICS0 = 1000××00B (Sets the STT0 bit to 1)
△3: IICS0 = 01000001B

Remark ▲: Always generated
△: Generated only when SPIE0 = 1
×: Don't care

(h) When arbitration loss occurs due to low-level data when attempting to generate a stop condition

(i) When WTIM0 = 0

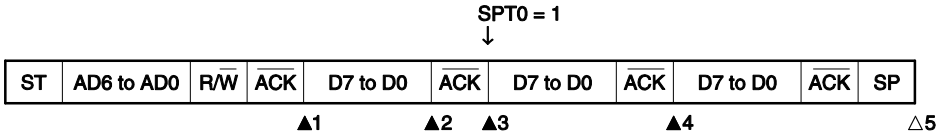

▲1: IICS0 = 1000×110B
▲2: IICS0 = 1000×000B (Sets the WTIM0 bit to 1)
▲3: IICS0 = 1000×100B (Clears the WTIM0 bit to 0)
▲4: IICS0 = 01000100B
△5: IICS0 = 00000001B

Remark ▲: Always generated
△: Generated only when SPIE0 = 1
×: Don't care

(ii) When WTIM0 = 1

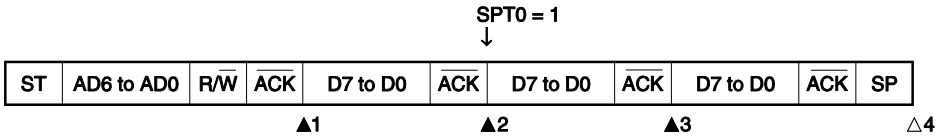

▲1: IICS0 = 1000×110B
▲2: IICS0 = 1000×100B (Sets the SPT0 bit to 1)
▲3: IICS0 = 01000100B
△4: IICS0 = 00000001B

Remark ▲: Always generated
△: Generated only when SPIE0 = 1
×: Don't care

16.6 Timing Charts

When using the I^2C bus mode, the master device outputs an address via the serial bus to select one of several slave devices as its communication partner.

After outputting the slave address, the master device transmits the TRC0 bit (bit 3 of the IICA status register 0 (IICS0)), which specifies the data transfer direction, and then starts serial communication with the slave device.

Figures 16-32 and 16-33 show timing charts of the data communication.

The IICA shift register 0 (IICA0)'s shift operation is synchronized with the falling edge of the serial clock (SCLA0). The transmit data is transferred to the SO latch and is output (MSB first) via the SDAA0 pin.

Data input via the SDAA0 pin is captured into IICA0 at the rising edge of SCLA0.

Figure 16-32. Example of Master to Slave Communication
(When 9-Clock Wait Is Selected for Master, 9-Clock Wait Is Selected for Slave) (1/4)

<R> **(1) Start condition ~ address ~ data**

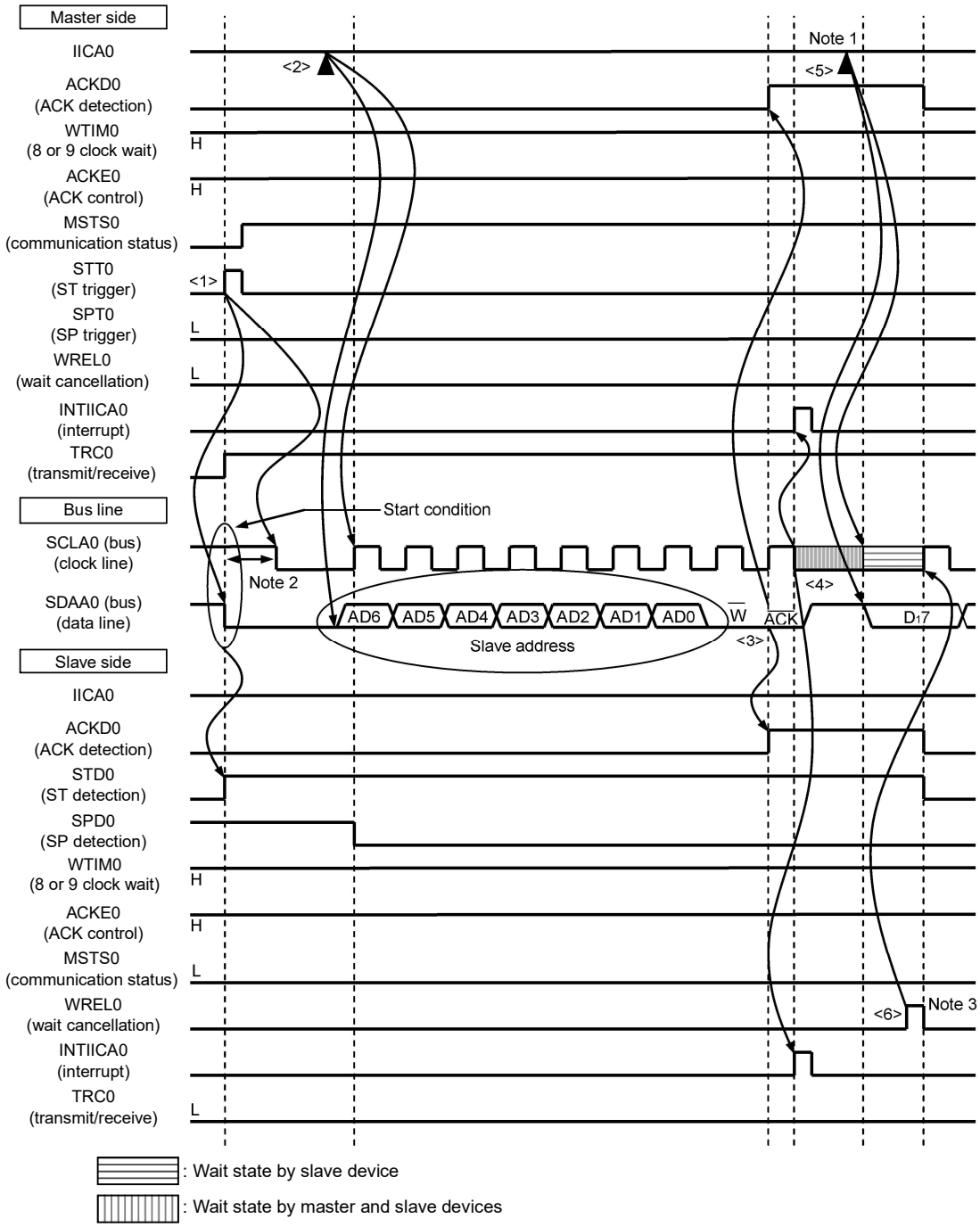

Notes 1. Write data to IICA0, not setting the WREL0 bit, in order to cancel a wait state during transmission by a master device.

2. Make sure that the time between the fall of the SDAA0 pin signal and the fall of the SCLA0 pin signal is at least 4.0 μs when specifying standard mode and at least 0.6 μs when specifying fast mode.

3. For releasing wait state during reception of a slave device, write “FFH” to IICA0 or set the WREL0 bit.

The meanings of <1> to <6> in (1) Start condition ~ address ~ data in Figure 16-32 are explained below.

<1> The start condition trigger is set by the master device (STT0 = 1) and a start condition (i.e. SCLA0 = 1 changes SDAA0 from 1 to 0) is generated once the bus data line goes low (SDAA0). When the start condition is subsequently detected, the master device enters the master device communication status (MSTS0 = 1). The master device is ready to communicate once the bus clock line goes low (SCLA0 = 0) after the hold time has elapsed.

<2> The master device writes the address + W (transmission) to the IICA shift register 0 (IICA0) and transmits the slave address.

<3> In the slave device if the address received matches the address (SVA0 value) of a slave device**Note**, that slave device sends an ACK by hardware to the master device. The ACK is detected by the master device (ACKD0 = 1) at the rising edge of the 9th clock.

<4> The master device issues an interrupt (INTIICA0: end of address transmission) at the falling edge of the 9th clock. The slave device whose address matched the transmitted slave address sets a wait status (SCLA0 = 0) and issues an interrupt (INTIICA0: address match)**Note**.

<5> The master device writes the data to transmit to the IICA0 register and releases the wait status that it set by the master device.

<6> If the slave device releases the wait status (WREL0 = 1), the master device starts transferring data to the slave device.

Note If the transmitted address does not match the address of the slave device, the slave device does not return an ACK to the master device (NACK: SDAA0 = 1). The slave device also does not issue the INTIICA0 interrupt (address match) and does not set a wait status. The master device, however, issues the INTIICA0 interrupt (end of address transmission) regardless of whether it receives an ACK or NACK.

Remark <1> to <15> in Figure 16-32 represent the entire procedure for communicating data using the I^2C bus. Figure 16-32 (1) Start condition ~ address ~ data shows the processing from <1> to <6>, Figure 16-32 (2) Address ~ data ~ data shows the processing from <3> to <10>, and Figure 16-32 (3) Data ~ data ~ stop condition shows the processing from <7> to <15>.

Figure 16-32. Example of Master to Slave Communication
(When 9-Clock Wait Is Selected for Master, 9-Clock Wait Is Selected for Slave) (2/4)

(2) Address ~ data ~ data

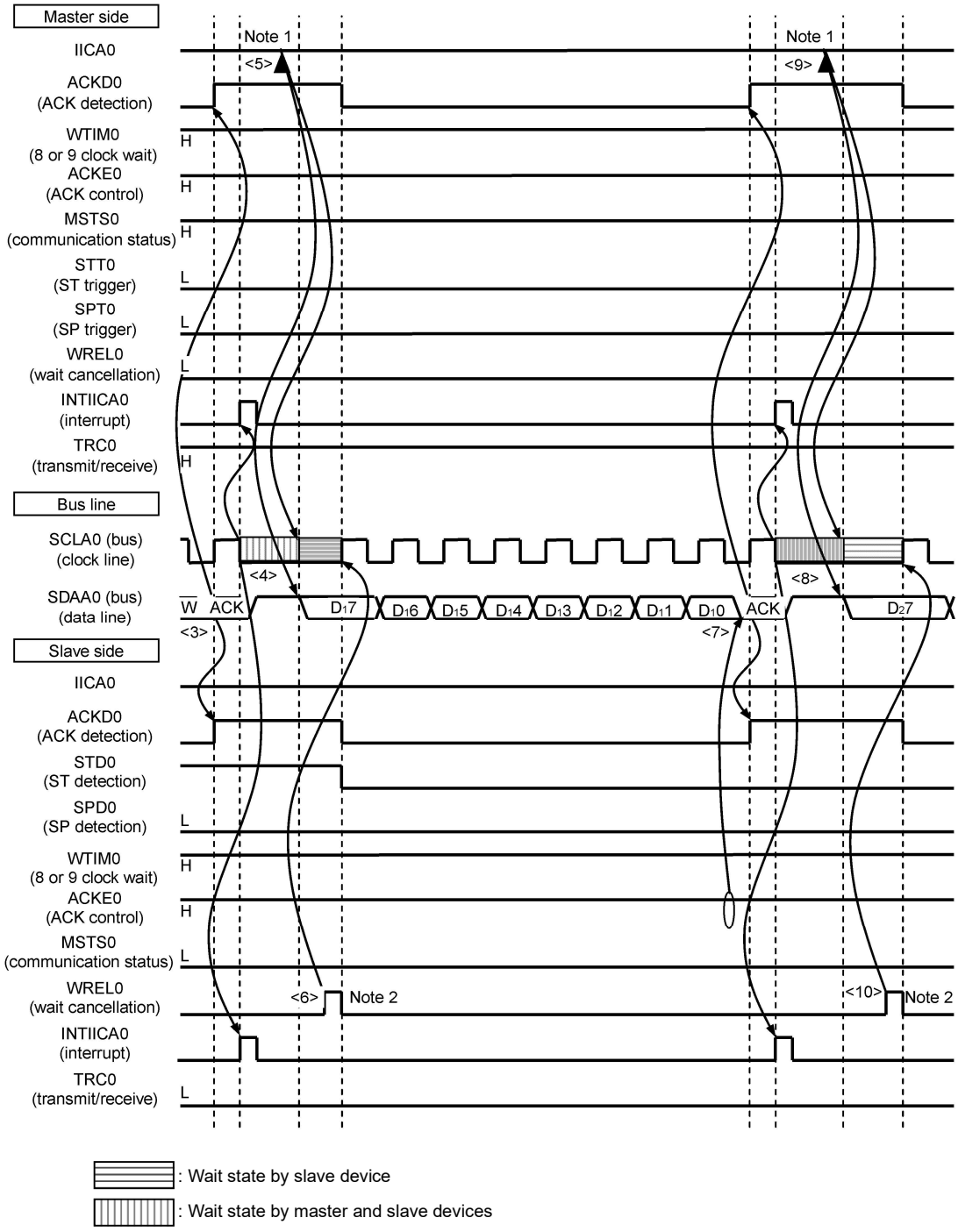

Notes 1. Write data to IICA0, not setting the WREL0 bit, in order to cancel a wait state during transmission by a master device.

2. For releasing wait state during reception of a slave device, write “FFH” to IICA0 or set the WREL0 bit.

The meanings of <3> to <10> in (2) Address ~ data ~ data in Figure 16-32 are explained below.

<3> In the slave device if the address received matches the address (SVA0 value) of a slave device[Note], that slave device sends an ACK by hardware to the master device. The ACK is detected by the master device (ACKD0 = 1) at the rising edge of the 9th clock.

<4> The master device issues an interrupt (INTIICA0: end of address transmission) at the falling edge of the 9th clock. The slave device whose address matched the transmitted slave address sets a wait status (SCLA0 = 0) and issues an interrupt (INTIICA0: address match)[Note].

<5> The master device writes the data to transmit to the IICA shift register 0 (IICA0) and releases the wait status that it set by the master device.

<6> If the slave device releases the wait status (WREL0 = 1), the master device starts transferring data to the slave device.

<7> After data transfer is completed, because of ACKE0 = 1, the slave device sends an ACK by hardware to the master device. The ACK is detected by the master device (ACKD0 = 1) at the rising edge of the 9th clock.

<8> The master device and slave device set a wait status (SCLA0 = 0) at the falling edge of the 9th clock, and both the master device and slave device issue an interrupt (INTIICA0: end of transfer).

<9> The master device writes the data to transmit to the IICA0 register and releases the wait status that it set by the master device.

<10> The slave device reads the received data and releases the wait status (WREL0 = 1). The master device then starts transferring data to the slave device.

Note If the transmitted address does not match the address of the slave device, the slave device does not return an ACK to the master device (NACK: SDAA0 = 1). The slave device also does not issue the INTIICA0 interrupt (address match) and does not set a wait status. The master device, however, issues the INTIICA0 interrupt (end of address transmission) regardless of whether it receives an ACK or NACK.

Remark <1> to <15> in Figure 16-32 represent the entire procedure for communicating data using the I^2C bus. Figure 16-32 (1) Start condition ~ address ~ data shows the processing from <1> to <6>, Figure 16-32 (2) Address ~ data ~ data shows the processing from <3> to <10>, and Figure 16-32 (3) Data ~ data ~ stop condition shows the processing from <7> to <15>.

Figure 16-32. Example of Master to Slave Communication
(When 9-Clock Wait Is Selected for Master, 9-Clock Wait Is Selected for Slave) (3/4)

(3) Data ~ data ~ Stop condition

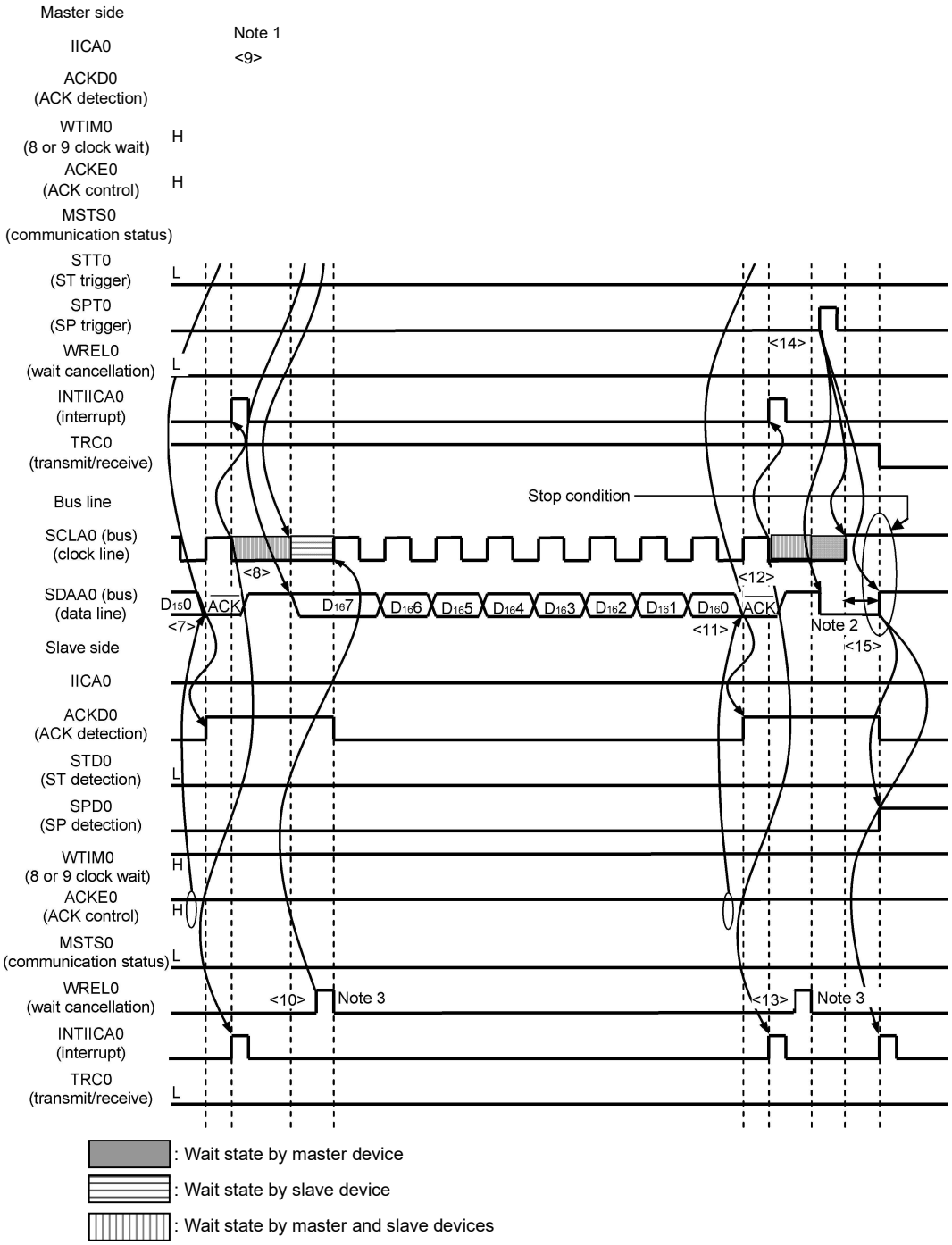

Notes 1. Write data to IICA0, not setting the WREL0 bit, in order to cancel a wait state during transmission by a master device.

2. Make sure that the time between the rise of the SCLA0 pin signal and the generation of the stop condition after a stop condition has been issued is at least 4.0 μs when specifying standard mode and at least 0.6 μs when specifying fast mode.

3. For releasing wait state during reception of a slave device, write “FFH” to IICA0 or set the WREL0 bit.

The meanings of <7> to <15> in (3) Data ~ data ~ stop condition in Figure 16-32 are explained below.

<7> After data transfer is completed, because of ACKE0 = 1, the slave device sends an ACK by hardware to the master device. The ACK is detected by the master device (ACKD0 = 1) at the rising edge of the 9th clock.

<8> The master device and slave device set a wait status (SCLA0 = 0) at the falling edge of the 9th clock, and both the master device and slave device issue an interrupt (INTIICA0: end of transfer).

<9> The master device writes the data to transmit to the IICA shift register 0 (IICA0) and releases the wait status that it set by the master device.

<10> The slave device reads the received data and releases the wait status (WREL0 = 1). The master device then starts transferring data to the slave device.

<11> When data transfer is complete, the slave device (ACKE0 =1) sends an ACK by hardware to the master device. The ACK is detected by the master device (ACKD0 = 1) at the rising edge of the 9th clock.

<12> The master device and slave device set a wait status (SCLA0 = 0) at the falling edge of the 9th clock, and both the master device and slave device issue an interrupt (INTIICA0: end of transfer).

<13> The slave device reads the received data and releases the wait status (WREL0 = 1).

<14> By the master device setting a stop condition trigger (SPT0 = 1), the bus data line is cleared (SDAA0 = 0) and the bus clock line is set (SCLA0 = 1). After the stop condition setup time has elapsed, by setting the bus data line (SDAA0 = 1), the stop condition is then generated (i.e. SCLA0 =1 changes SDAA0 from 0 to 1).

<15> When a stop condition is generated, the slave device detects the stop condition and issues an interrupt (INTIICA0: stop condition).

Remark <1> to <15> in Figure 16-32 represent the entire procedure for communicating data using the I^2C bus. Figure 16-32 (1) Start condition ~ address ~ data shows the processing from <1> to <6>, Figure 16-32 (2) Address ~ data ~ data shows the processing from <3> to <10>, and Figure 16-32 (3) Data ~ data ~ stop condition shows the processing from <7> to <15>.

Figure 16-32. Example of Master to Slave Communication
(When 9-Clock Wait Is Selected for Master, 9-Clock Wait Is Selected for Slave) (4/4)

(4) Data ~ restart condition ~ address

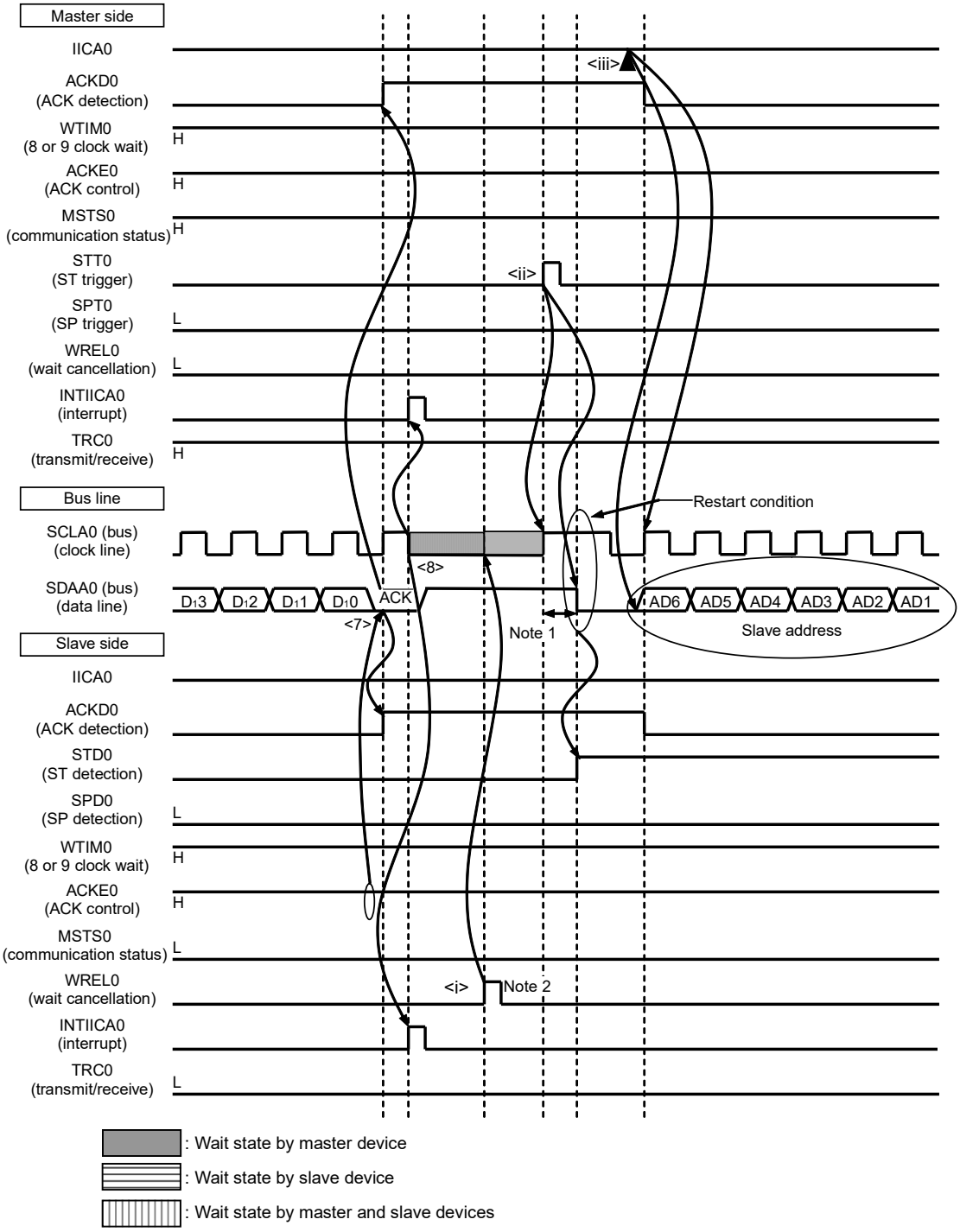

Notes 1. Make sure that the time between the rise of the SCLA0 pin signal and the generation of the start condition after a restart condition has been issued is at least 4.7 μs when specifying standard mode and at least 0.6 μs when specifying fast mode.

2. For releasing wait state during reception of a slave device, write “FFH” to IICA0 or set the WREL0 bit.

The following describes the operations in Figure 16-32 (4) Data ~ restart condition ~ address. After the operations in steps <7> and <8>, the operations in steps <i> to <iii> are performed. These steps return the processing to step <iii>, the data transmission step.

<7> After data transfer is completed, because of ACKE0 = 1, the slave device sends an ACK by hardware to the master device. The ACK is detected by the master device (ACKD0 = 1) at the rising edge of the 9th clock.

<8> The master device and slave device set a wait status (SCLA0 = 0) at the falling edge of the 9th clock, and both the master device and slave device issue an interrupt (INTIICA0: end of transfer).

<i> The slave device reads the received data and releases the wait status (WREL0 = 1).

<ii> The start condition trigger is set again by the master device (STT0 = 1) and a start condition (i.e. SCLA0 =1 changes SDAA0 from 1 to 0) is generated once the bus clock line goes high (SCLA0 = 1) and the bus data line goes low (SDAA0 = 0) after the restart condition setup time has elapsed. When the start condition is subsequently detected, the master device is ready to communicate once the bus clock line goes low (SCLA0 = 0) after the hold time has elapsed.

<iii> The master device writing the address + R/W (transmission) to the IICA shift register (IICA0) enables the slave address to be transmitted.

Figure 16-33. Example of Slave to Master Communication
(When 8-Clock Wait Is Selected for Master, 9-Clock Wait Is Selected for Slave) (1/3)

(1) Start condition ~ address ~ data

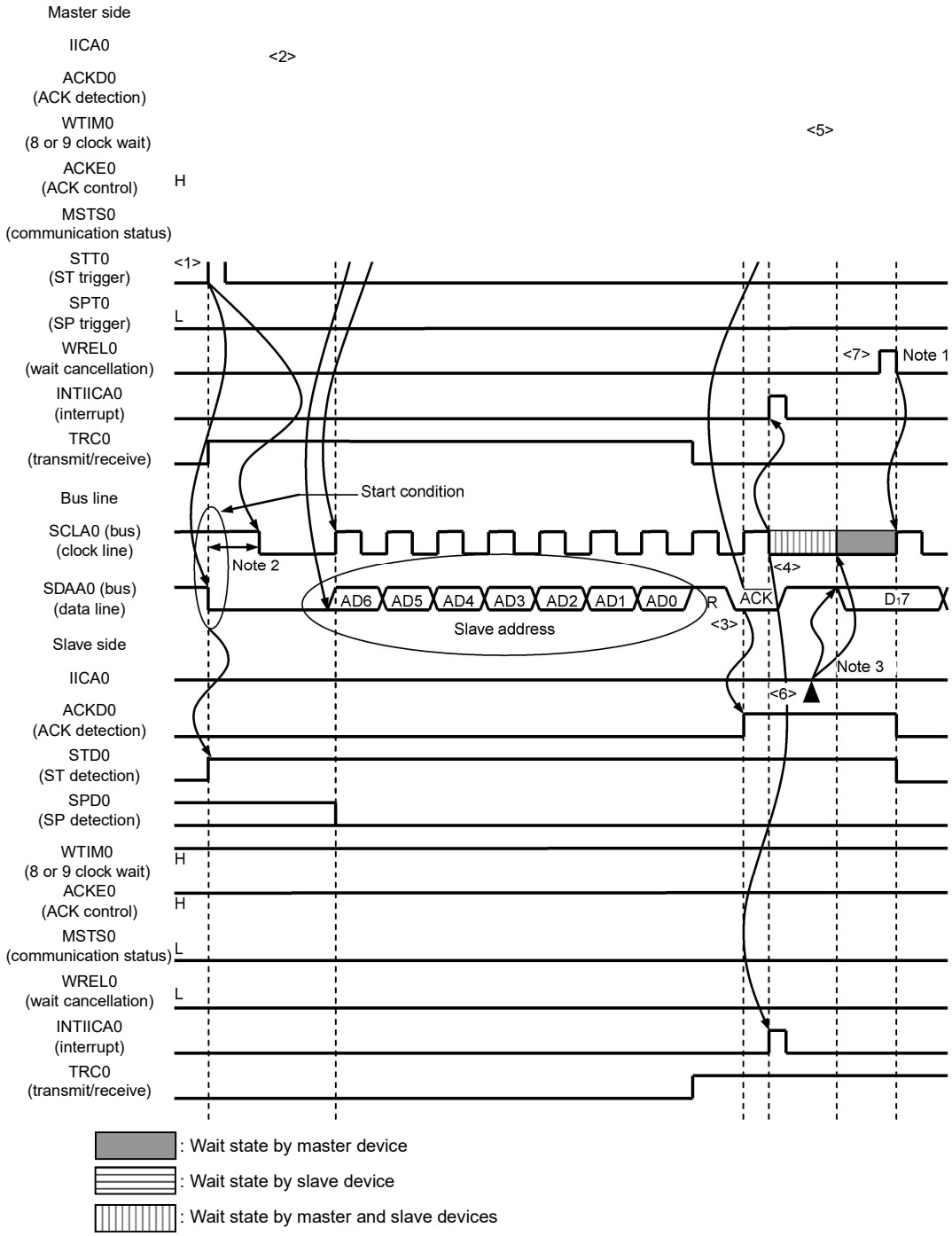

Notes 1. For releasing wait state during reception of a master device, write “FFH” to IICA0 or set the WREL0 bit.

2. Make sure that the time between the fall of the SDAA0 pin signal and the fall of the SCLA0 pin signal is at least 4.0 μs when specifying standard mode and at least 0.6 μs when specifying fast mode.

3. Write data to IICA0, not setting the WREL0 bit, in order to cancel a wait state during transmission by a slave device.

The meanings of <1> to <7> in (1) Start condition ~ address ~ data in Figure 18-33 are explained below.

<1> The start condition trigger is set by the master device (STT0 = 1) and a start condition (i.e. SCLA0 =1 changes SDAA0 from 1 to 0) is generated once the bus data line goes low (SDAA0). When the start condition is subsequently detected, the master device enters the master device communication status (MSTS0 = 1). The master device is ready to communicate once the bus clock line goes low (SCLA0 = 0) after the hold time has elapsed.

<2> The master device writes the address + R (reception) to the IICA shift register 0 (IICA0) and transmits the slave address.

<3> In the slave device if the address received matches the address (SVA0 value) of a slave device**Note**, that slave device sends an ACK by hardware to the master device. The ACK is detected by the master device (ACKD0 = 1) at the rising edge of the 9th clock.

<4> The master device issues an interrupt (INTIICA0: end of address transmission) at the falling edge of the 9th clock. The slave device whose address matched the transmitted slave address sets a wait status (SCLA0 = 0) and issues an interrupt (INTIICA0: address match)**Note**.

<5> The timing at which the master device sets the wait status changes to the 8th clock (WTIM0 = 0).

<6> The slave device writes the data to transmit to the IICA0 register and releases the wait status that it set by the slave device.

<7> The master device releases the wait status (WREL0 = 1) and starts transferring data from the slave device to the master device.

Note If the transmitted address does not match the address of the slave device, the slave device does not return an ACK to the master device (NACK: SDAA0 = 1). The slave device also does not issue the INTIICA0 interrupt (address match) and does not set a wait status. The master device, however, issues the INTIICA0 interrupt (end of address transmission) regardless of whether it receives an ACK or NACK.

Remark <1> to <19> in Figure 16-33 represent the entire procedure for communicating data using the I^2C bus. Figure 16-33 (1) Start condition ~ address ~ data shows the processing from <1> to <7>, Figure 16-33 (2) Address ~ data ~ data shows the processing from <3> to <12>, and Figure 16-33 (3) Data ~ data ~ stop condition shows the processing from <8> to <19>.

Figure 16-33. Example of Slave to Master Communication
(When 8-Clock Wait Is Selected for Master, 9-Clock Wait Is Selected for Slave) (2/3)

(2) Address ~ data ~ data

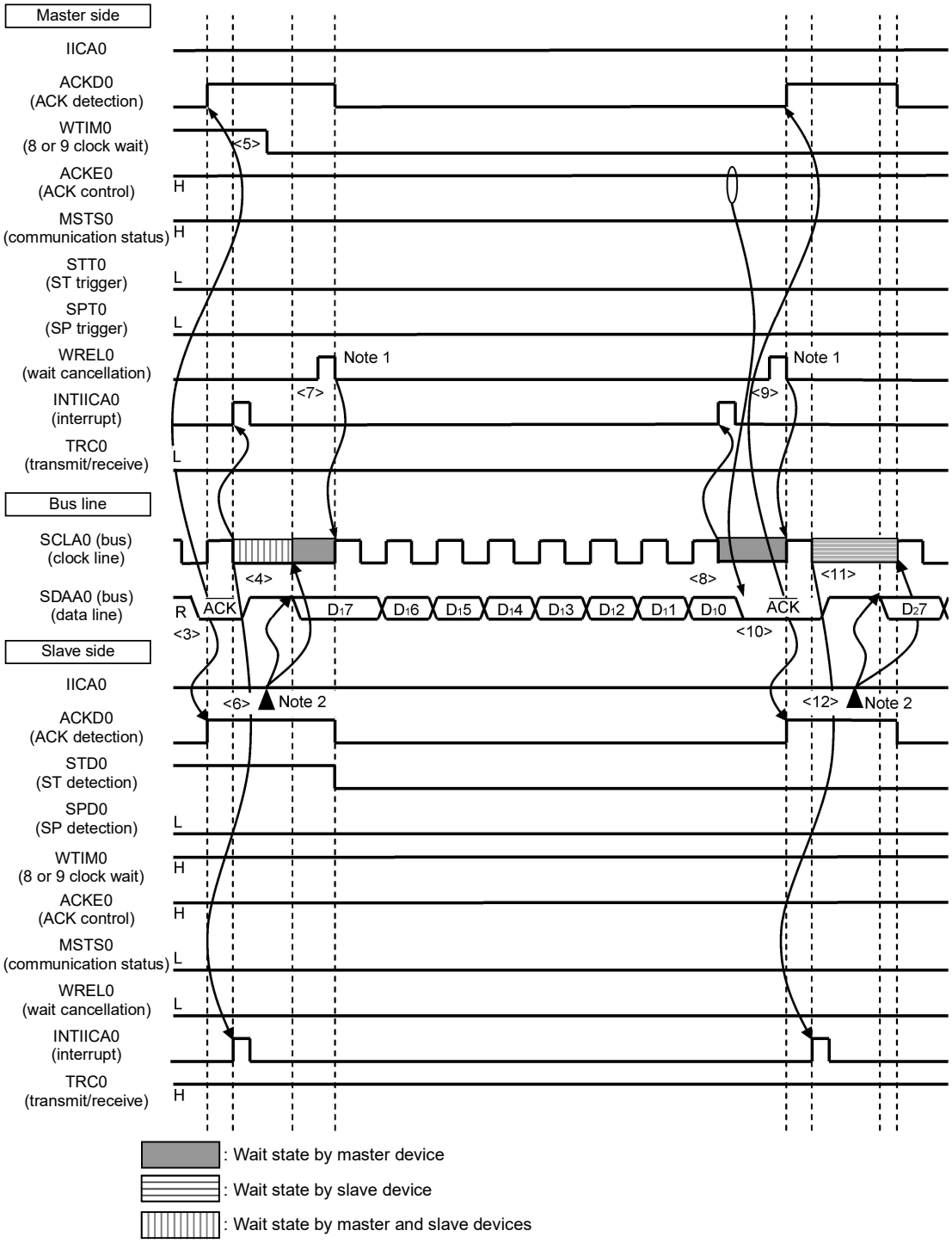

Notes 1. For releasing wait state during reception of a master device, write “FFH” to IICA0 or set the WREL0 bit.

2. Write data to IICA0, not setting the WREL0 bit, in order to cancel a wait state during transmission by a slave device.

The meanings of <3> to <12> in (2) Address ~ data ~ data in Figure 16-33 are explained below.

<3> In the slave device if the address received matches the address (SVA0 value) of a slave device[Note], that slave device sends an ACK by hardware to the master device. The ACK is detected by the master device (ACKD0 = 1) at the rising edge of the 9th clock.

<4> The master device issues an interrupt (INTIICA0: end of address transmission) at the falling edge of the 9th clock. The slave device whose address matched the transmitted slave address sets a wait status (SCLA0 = 0) and issues an interrupt (INTIICA0: address match)[Note].

<5> The master device changes the timing of the wait status to the 8th clock (WTIM0 = 0).

<6> The slave device writes the data to transmit to the IICA shift register 0 (IICA0) and releases the wait status that it set by the slave device.

<7> The master device releases the wait status (WREL0 = 1) and starts transferring data from the slave device to the master device.

<8> The master device sets a wait status (SCLA0 = 0) at the falling edge of the 8th clock, and issues an interrupt (INTIICA0: end of transfer). Because of ACKE0 = 1 in the master device, the master device then sends an ACK by hardware to the slave device.

<9> The master device reads the received data and releases the wait status (WREL0 = 1).

<10> The ACK is detected by the slave device (ACKD0 = 1) at the rising edge of the 9th clock.

<11> The slave device set a wait status (SCLA0 = 0) at the falling edge of the 9th clock, and the slave device issue an interrupt (INTIICA0: end of transfer).

<12> By the slave device writing the data to transmit to the IICA0 register, the wait status set by the slave device is released. The slave device then starts transferring data to the master device.

Note If the transmitted address does not match the address of the slave device, the slave device does not return an ACK to the master device (NACK: SDAA0 = 1). The slave device also does not issue the INTIICA0 interrupt (address match) and does not set a wait status. The master device, however, issues the INTIICA0 interrupt (end of address transmission) regardless of whether it receives an ACK or NACK.

Remark <1> to <19> in Figure 16-33 represent the entire procedure for communicating data using the I^2C bus. Figure 16-33 (1) Start condition ~ address ~ data shows the processing from <1> to <7>, Figure 16-33 (2) Address ~ data ~ data shows the processing from <3> to <12>, and Figure 16-33 (3) Data ~ data ~ stop condition shows the processing from <8> to <19>.

Figure 16-33. Example of Slave to Master Communication
(When 8-Clock and 9-Clock Wait Is Selected for Master, 9-Clock Wait Is Selected for Slave) (3/3)

(3) Data ~ data ~ stop condition

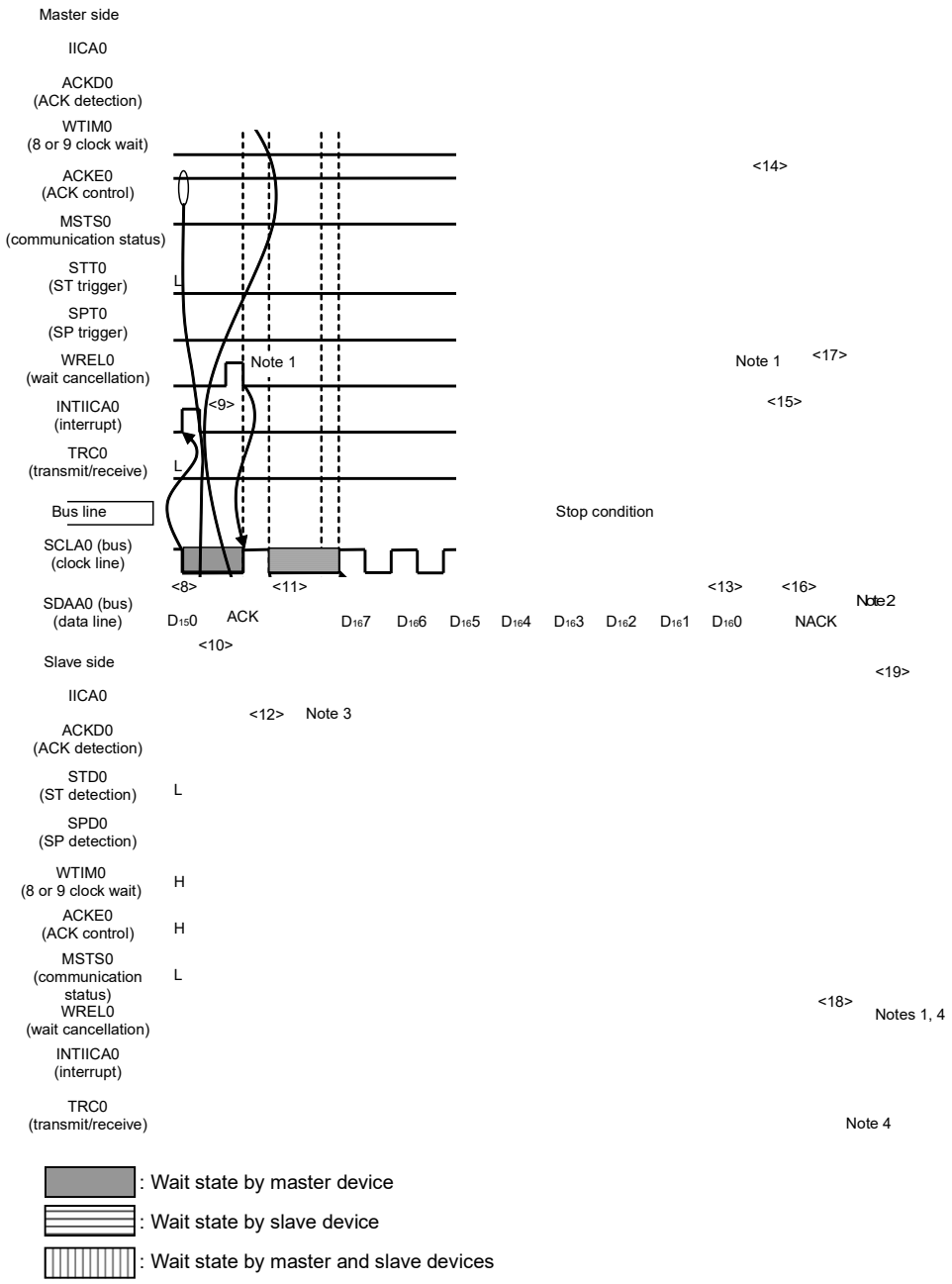

Notes 1. To cancel a wait state, write “FFH” to IICA0 or set the WREL0 bit.

2. Make sure that the time between the rise of the SCLA0 pin signal and the generation of the stop condition after a stop condition has been issued is at least 4.0 μs when specifying standard mode and at least 0.6 μs when specifying fast mode.

3. Write data to IICA0, not setting the WREL0 bit, in order to cancel a wait state during transmission by a slave device.

4. If a wait state during transmission by a slave device is canceled by setting the WREL0 bit, the TRC0 bit will be cleared.

The meanings of <8> to <19> in (3) Data ~ data ~ stop condition in Figure 16-33 are explained below.

<R>

<8> The master device sets a wait status (SCLA0 = 0) at the falling edge of the 8th clock, and issues an interrupt (INTIICA0: end of transfer). Because of ACKE0 = 1 in the master device, the master device then sends an ACK by hardware to the slave device.

<9> The master device reads the received data and releases the wait status (WREL0 = 1).

<10> The ACK is detected by the slave device (ACKD0 = 1) at the rising edge of the 9th clock.

<11> The slave device set a wait status (SCLA0 = 0) at the falling edge of the 9th clock, and the slave device issue an interrupt (INTIICA0: end of transfer).

<12> By the slave device writing the data to transmit to the IICA register, the wait status set by the slave device is released. The slave device then starts transferring data to the master device.

<13> The master device issues an interrupt (INTIICA0: end of transfer) at the falling edge of the 8th clock, and sets a wait status (SCLA0 = 0). Because ACK control (ACKE0 = 1) is performed, the bus data line is at the low level (SDAA0 = 0) at this stage.

<14> The master device sets NACK as the response (ACKE0 = 0) and changes the timing at which it sets the wait status to the 9th clock (WTIM0 = 1).

<15> If the master device releases the wait status (WREL0 = 1), the slave device detects the NACK (ACKD0 = 0) at the rising edge of the 9th clock.

<16> The master device and slave device set a wait status (SCLA0 = 0) at the falling edge of the 9th clock, and both the master device and slave device issue an interrupt (INTIICA0: end of transfer).

<17> When the master device issues a stop condition (SPT0 = 1), the bus data line is cleared (SDAA0 = 0) and the master device releases the wait status. The master device then waits until the bus clock line is set (SCLA0 = 1).

<18> The slave device acknowledges the NACK, halts transmission, and releases the wait status (WREL0 = 1) to end communication. Once the slave device releases the wait status, the bus clock line is set (SCLA0 = 1).

<19> Once the master device recognizes that the bus clock line is set (SCLA0 = 1) and after the stop condition setup time has elapsed, the master device sets the bus data line (SDAA0 = 1) and issues a stop condition (i.e. SCLA0 =1 changes SDAA0 from 0 to 1). The slave device detects the generated stop condition and slave device issue an interrupt (INTIICA0: stop condition).

Remark <1> to <19> in Figure 16-33 represent the entire procedure for communicating data using the I^2C bus. Figure 16-33 (1) Start condition ~ address ~ data shows the processing from <1> to <7>, Figure 16-33 (2) Address ~ data ~ data shows the processing from <3> to <12>, and Figure 16-33 (3) Data ~ data ~ stop condition shows the processing from <8> to <19>.

CHAPTER 17 LIN/UART MODULE (RLIN3)

17.1 Overview

The LIN/UART module is a hardware LIN communication controller that supports LIN Specification Package Revision 1.3, 2.0, 2.1, 2.2 and SAE J2602, and automatically performs frame communication and error determination.
The LIN/UART module is provided with UART mode and can also be used as a UART.
Table 17-1 gives the LIN/UART module specifications and Figures 17-1 and 17-2 show block diagrams of the LIN/UART module.

Table 17-1. LIN/UART Module Specifications

Item			Specifications
Channel count			RL78/F13: 1 channel RL78/F14: 1 to 2 channels
LIN communication function	Protocol		LIN Specification Package Revision 1.3, 2.0, 2.1, 2.2 and SAE J2602
	Variable frame structure	Master	• Break (low) transmission width: 13 to 28 Tbits • Break delimiter transmission width: 1 to 4 Tbits • Inter-byte space (header): 0 to 7 Tbits (space between Sync field and ID field)Note 1 • Response space: 0 to 7 TbitsNote 1 • Inter-byte space: 0 to 3 Tbits (space between data bytes in response area) • Wake-up: 1 to 16 Tbits
		Slave	• Break reception width: 9.5 or 10.5 Tbits [for fixed baud rate] : 10 or 11 Tbits [for auto baud rate] • Response space: 0 to 7 Tbits • Inter-byte space: 0 to 3 Tbits (space between data bytes in response area) • Wake-up: 1 to 16 Tbits
	Checksum		• Automatic operation for both transmission and reception • Classic or enhanced selectable (for each frame)
	Response field data byte count		Variable from 0 to 8 bytes Multi-byte (9 or more bytes) response transmission and reception also possible
	Frame communication modes	Master	• Mode in which header transmission and response transmission/reception is started with a single transmission start request • Mode in which header transmission and response transmission are started with separate transmission start requests (frame separate mode)
		Slave	• Mode in which header is automatically received with fixed baud rate • Mode in which header is automatically received with the baud rate set according to the sync field measurement result of the sync field and break field detected
	Wake-up transmission and reception		LIN wake-up mode provided • Wake-up transmission (1 to 16 Tbits) • Wake-up reception Low width of input signals measured
	Status	Master	• Successful frame/wake-up transmission • Successful header transmission • Successful frame/wake-up receptionNote 2 • Successful data 1 reception • Error detection • Operation mode (LIN reset mode, LIN wake-up mode, LIN operation mode, LIN self-test mode)

Item		Specifications	
LIN communication function	Status	Slave	• Successful frame/wake-up transmission • Successful frame/wake-up reception[Note 2] • Successful header reception • Successful data 1 reception • Error detection • Operation mode (LIN reset mode, LIN wake-up mode, LIN operation mode, LIN self-test mode)
	Error status	Master	• Bit error • Checksum error • Frame timeout error/response timeout error • Physical bus error • Framing error • Response preparation error
		Slave	• Bit error • Checksum error • Frame timeout error/response timeout error • Sync field error • ID parity error • Framing error • Response preparation error
	Baud rate selection	Baud rate conforming to the LIN specifications generated using baud rate generator	
	Test mode	Self-test mode for user evaluation	
	Interrupt function	Master	• Successful header/frame/wake-up transmission • Successful frame/wake-up reception[Note 2] • Error detection
		Slave	• Successful frame/wake-up transmission • Header/frame/wake-up reception[Note 2] • Error detection

Item		Specifications
UART communication function	Data buffer	• Transmission data buffer/transmission data buffer for wait (exclusively for transmission; data length of 1, 7, 8, and 9 bits supported) • UART buffer (exclusively for transmission; variable data length from 1 to 9 bits; data length of 7 and 8 bits supported) • Reception data buffer (exclusively for reception; data length of 1, 7, 8, and 9 bits supported)
	Data format	• Character length: 7 or 8 bits 9 bits including the expansion bit supported. • Transmission stop bit: 1 or 2 bits • Parity function: odd, even, 0, or none • LSB- or MSB-first transfer selectable • Reverse input/output of transmission/reception data
	Status	• Transmission status • Reception status • Successful UART buffer transmission • Error SUM • Expansion bit detection • ID match • Reset mode status
	Error status	• Bit error • Framing error • Parity error • Overrun error
	Baud rate selection	With the baud rate generator incorporated, any baud rate can be set.
	If the expected level is detected for any expansion bit, the 8 bits of the received data can be compared to the preset register data. The stop bit received is guaranteed (start of transmission can be delayed when start of transmission is attempted during reception of the stop bit).	
	Interrupt function	• Transmission start/successful transmission • Successful reception • Status detection

Notes 1. Since the same register is used for setting, the inter-byte space (header) = response space.

2. For wake-up reception, the low level width of the input signal is indicated.

Figure 17-1. LIN/UART Module Block Diagram (1)

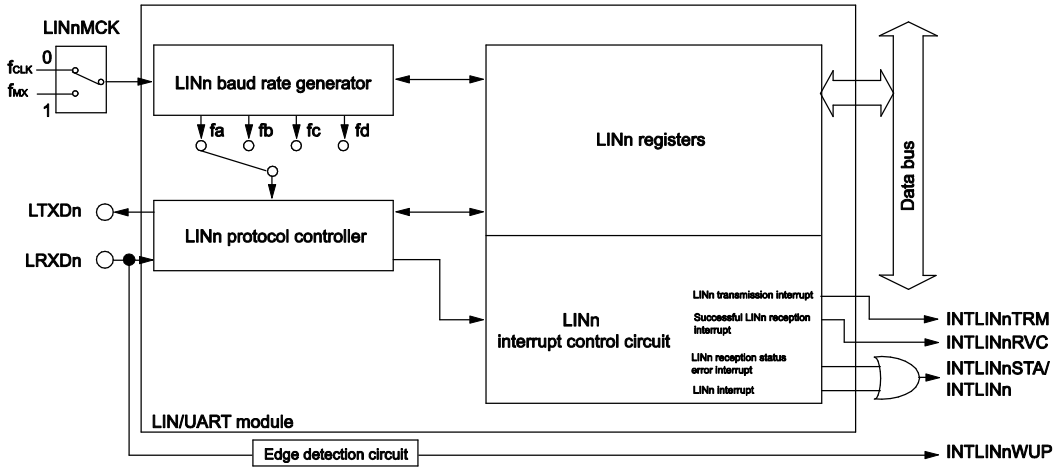

n = 0, 1

- LTXDn, LRXDn: LIN/UART module I/O pins
- LINn baud rate generator: Generates the LIN/UART module communication clock signal.
- LINn registers: LIN/UART module registers
- LINn interrupt controller: Controls interrupt requests generated by the LIN/UART module.

(n = 0, 1)

Figure 17-2. LIN/UART Module Block Diagram (2)

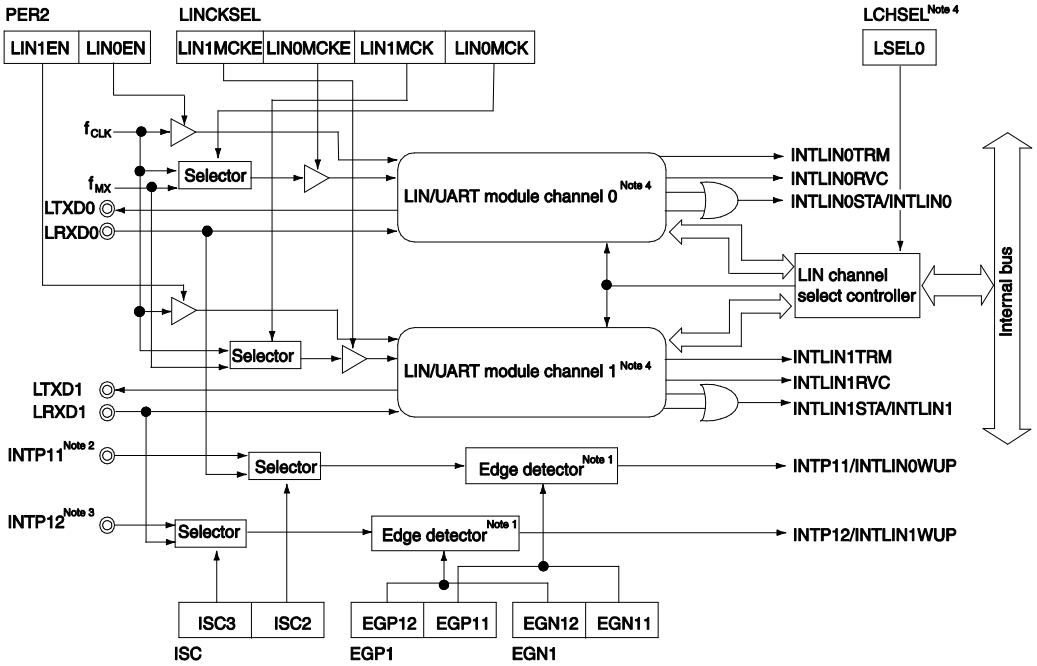

Notes 1. For details, see **CHAPTER 21 INTERRUPT FUNCTIONS**.
2. INTP11 is mounted only on the 80-pin products of RL78/F13 (LIN incorporated), 64- and 80-pin products of RL78/F13 (CAN and LIN incorporated), and 64-, 80-, and 100-pin products of RL78/F14.
3. INTP12 is mounted only on 64-, 80-, and 100-pin products of RL78/F14.
4. Only the registers of the channel that is selected with the LCHSEL register can be accessed using the CPU instructions and by the DTC. For the product incorporating one channel, set the LSEL0 bit in the LCHSEL register to 0.

Table 17-2 shows the I/O pins used in the LIN/UART module.

Table 17-2. LIN/UART Module I/O Pins

Module Symbol	Pin Name	Input/Output	Function
LINn	LRXDn	Input	LIN communication function Input pin of the UART communication function
	LTXDn	Output	LIN communication function Output pin of the UART communication function

(n = 0, 1)

The appropriate mode should be used for the LIN/UART module according to the application: LIN master, LIN slave, or UART.

LIN master

- LIN reset mode
- LIN mode (LIN master mode)
  - LIN wake-up mode
  - LIN operation mode
- LIN self-test mode

LIN slave

- LIN reset mode
- LIN mode (LIN slave mode [auto baud rate] or LIN slave mode [fixed baud rate])
  - LIN wake-up mode
  - LIN operation mode
- LIN self-test mode

UART

- LIN reset mode
- UART mode

17.2 Register Descriptions

Table 17-3 lists the LIN/UART module-related registers.

Table 17-3. List of LIN/UART Module-Related Registers

Register Name	Symbol	LIN Master	LIN Slave	UART
Peripheral enable register 2	PER2	√	√	√
Input switch control register	ISC	√	√	√
LIN channel select register	LCHSEL	√	√	√
LIN clock select register	LINCKSEL	√	√	√
External interrupt rising edge enable registers 0, 1	EGP0, EGP1	√	√	√
External interrupt falling edge enable registers 0, 1	EGN0, EGN1	√	√	√
LIN wake-up baud rate select register	LWBR0/LWBR1	√	√	√
LIN/UART baud rate prescaler registers	LBRP0/LBRP1	—	√	√
LIN/UART baud rate prescaler 0 register	LBRP00/LBRP10	√	√	√
LIN/UART baud rate prescaler 1 register	LBRP01/LBRP11	√	√	√
LIN self-test control register	LSTC0/LSTC1	√	√	—
UART standby control register	LUSC0/LUSC1	—	—	√
LIN/UART mode register	LMD0/LMD1	√	√	√
LIN break field configuration register/ UART configuration register	LBFC0/LBFC1	√	√	√
LIN/UART space configuration register	LSC0/LSC1	√	√	√
LIN wake-up configuration register	LWUP0/LWUP1	√	√	—
LIN interrupt enable register	LIE0/LIE1	√	√	—
LIN/UART error detection enable register	LEDE0/LEDE1	√	√	√
LIN/UART control register	LCUC0/LCUC1	√	√	√
LIN/UART transmission control register	LTRC0/LTRC1	√	√	√
LIN/UART mode status register	LMST0/LMST1	√	√	√
LIN/UART status register	LST0/LST1	√	√	√
LIN/UART error status register	LEST0/LEST1	√	√	√
LIN/UART data field configuration register	LDFC0/LDFC1	√	√	√
LIN/UART ID buffer register	LIDB0/LIDB1	√	√	√
LIN checksum buffer register	LCBR0/LCBR1	√	√	—
UART data buffer 0 register	LUDB00/LUDB10	—	—	√
LIN/UART data buffer 1 register	LDB01/LDB11	√	√	√
LIN/UART data buffer 2 register	LDB02/LDB12	√	√	√
LIN/UART data buffer 3 register	LDB03/LDB13	√	√	√
LIN/UART data buffer 4 register	LDB04/LDB14	√	√	√
LIN/UART data buffer 5 register	LDB05/LDB15	√	√	√
LIN/UART data buffer 6 register	LDB06/LDB16	√	√	√
LIN/UART data buffer 7 register	LDB07/LDB17	√	√	√
LIN/UART data buffer 8 register	LDB08/LDB18	√	√	√
UART operation enable register	LUOER0/LUOER1	—	—	√
UART option register 1	LUOR01/LUOR11	—	—	√

Register Name	Symbol	LIN Master	LIN Slave	UART
UART transmission data register	LUTDR0/LUTDR1	—	—	√
	LUTDR0L/ LUTDR1L	—	—	√
	LUTDR0H/ LUTDR1H	—	—	√
UART reception data register	LURDR0/LURDR1	—	—	√
	LURDR0L/ LURDR1L	—	—	√
	LURDR0H/ LURDR1H	—	—	√
UART wait transmission data register	LUWTDR0/LUWTDR1	—	—	√
	LUWTDR0L/ LUWTDR1L	—	—	√
	LUWTDR0H/ LUWTDR1H	—	—	√

√ : Used

—: Not used

When writing to a register not used, write 00H.

17.2.1 LIN Registers for Master Mode

(1) Input Switch Control Register (ISC)

The ISC2 and ISC3 bits in the ISC register are used in the LIN/UART module (RLIN3).
Setting bit 2 or bit 3 to 1 selects the input signal of the serial data input pin for the LIN/UART module as the external interrupt input.
This register can be set by a 1-bit or 8-bit memory manipulation instruction.
Reset signal generation sets this register to 00H.

Address: F0073H After reset: 00H R/W

Symbol	7	6	5	4	3	2	1	0
ISC	0	0	0	0	ISC3	ISC2	0	ISC0

ISC3	Switching inputs for external interrupt INTP12
0	INTP12 pin input signal is set as external interrupt input.
1	LRXD1 pin input signal is set as external interrupt input.

ISC2	Switching inputs for external interrupt INTP11
0	INTP11 pin input signal is set as external interrupt input.
1	LRXD0 pin input signal is set as external interrupt input.

ISC0	Switching inputs for external interrupt INTP0
0	INTP0 pin input signal is set as external interrupt input. (normal operation)
1	RXD0 pin input signal is set as external interrupt input. (wake-up signal detection)

Caution Bits 7 to 4 and 1 should always be set to 0.

(2) LIN Channel Select Register (LCHSEL)

Address: F007BH

	7	6	5	4	3	2	1	0
	—	—	—	—	—	—	—	LSEL0
Value after reset:	0	0	0	0	0	0	0	0

Bit	Symbol	Bit Name	Function	R/W
0	LSEL0	LIN Channel Select	0: Selects LIN0. (LIN0 registers can be accessed.) 1: Selects LIN1. (LIN1 registers can be accessed.)	R/W
7 to 1	—	Reserved	These bits are always read as 0. The write value should always be 0.	R/W

LSEL0 bit (LIN channel select bit)

Since the LIN/UART module registers are not directly mapped on the CPU memory map, they should be accessed via the register windows. The register windows are mapped on addresses F06C1H to F06E9H.
Setting a value to the LSEL0 bit maps all the registers of the corresponding channel on the register window.
Setting the LSEL0 bit to 0 maps the LIN0 registers.
Setting the LSEL0 bit to 1 maps the LIN1 registers.

With the product incorporating one channel, set the LSEL0 bit to 0.
With the product incorporating two channels, set the LSEL0 bit to the applicable value before accessing a register of the channel to use.

(3) Peripheral Enable Register 2 (PER2)

The PER2 register is used to enable or disable supplying the clock to the peripheral hardware. Clock supply to the hardware that is not used is also stopped so as to decrease the power consumption and noise.

To use the peripheral functions which are controlled by this register, set (1) the bit corresponding to each function before specifying the initial settings of the peripheral functions.

This register can be set by a 1-bit or 8-bit memory manipulation instruction.

Reset signal generation sets this register to 00H.

Address: F02C1H After reset: 00H R/W

Symbol	7	6	5	4	<3>	<2>	1	<0>
PER2	0	0	0	0	LIN1EN Note 1	LIN0EN	0	CAN0EN Note 2

LIN1EN Note 1	Control of LIN1 input clock supply
0	Stops input clock supply. • Disables writing to the SFR used by LIN1. • LIN1 is in the reset state.
1	Enables input clock supply. • Enables reading from and writing to the SFR used by LIN1.

LIN0EN	Control of LIN0 input clock supply
0	Stops input clock supply. • Disables writing to the SFR used by LIN0. • LIN0 is in the reset state.
1	Enables input clock supply. • Enables reading from and writing to the SFR used by LIN0.

CAN0EN Note 2	Control of CAN input clock supply
0	Stops input clock supply. • Disables writing to the SFR used by CAN. • CAN is in the reset state.
1	Enables input clock supply. • Enables reading from and writing to the SFR used by CAN.

Notes 1. Only in the RL78/F14 products with at least 128 Kbytes of code flash memory and the 100-pin products of the RL78/F14.

2. Only in the RL78/F13 (CAN and LIN incorporated) and RL78/F14 products.

Caution Be sure to clear the following bits to 0.

Bits 0, 1, 3, 4, 5, 6, and 7 in the RL78/F13 (LIN incorporated) products

Bits 1, 3, 4, 5, 6, and 7 in the RL78/F13 (CAN and LIN incorporated) products and the RL78/F14 products with 30, 32, 48, 64, or 80 pins and up to 96 Kbytes of code flash memory

Bits 1, 4, 5, 6, and 7 in the RL78/F14 products with at least 128 Kbytes of code flash memory and the 100-pin products of the RL78/F14

(4) LIN Clock Select Register (LINCKSEL)

This register is used to control the communication clock source supplied to the LIN.

Address: F02C3H After reset: 00H R/W

Symbol	7	6	<5>	<4>	3	2	<1>	<0>
LINCKSEL	0	0	LIN1MCKE Note	LIN0MCKE	0	0	LIN1MCK Note	LIN0MCK

LIN1MCKE Note	Control of supplying or stopping LIN1 communication clock source
0	Stops LIN communication clock source supply.
1	Enables LIN communication clock source supply.

LIN0MCKE	Control of supplying or stopping LIN0 communication clock source
0	Stops LIN communication clock source supply.
1	Enables LIN communication clock source supply.

LIN1MCK Note	Control of selecting LIN1 communication clock source
0	Selects the f_{CLK} clock.
1	Selects the f_{MX} clock.

LIN0MCK	Control of selecting LIN0 communication clock source
0	Selects the f_{CLK} clock.
1	Selects the f_{MX} clock.

Note Only in the RL78/F14 products with at least 48 pins and 128 Kbytes or more of code flash memory and the 100-pin products of the RL78/F14.

Cautions 1. Select the LINn operating clock with the LINnMCK bit before setting the LINnMCKE (n = 0, 1) bit to 1 (operating clock is supplied).

2. When operating LINn in SNOOZE mode, set the LINnMCK bit to 0.

3. In case of LINnMCK is set to 1, do not used the timeout error detection.
In that case, set at least 1.2 times the frequency of the LIN communication clock source to the f_{CLK} clock.

(5) External interrupt rising edge enable registers (EGP0, EGP1), external interrupt falling edge enable registers (EGN0, EGN1)

For details, see **21.3.4 External interrupt rising edge enable registers (EGP0, EGP1), external interrupt falling edge enable registers (EGN0, EGN1)**.

(6) LIN Wake-up Baud Rate Select Register (LWBRn)

Address: F06C1H

	7	6	5	4	3	2	1	0
	NSPB[3:0]				LPRS[2:0]			LWBR0
Value after reset:	0	0	0	0	0	0	0	0

Bit	Symbol	Bit Name	Function	R/W
0	LWBR0	Wake-up Baud Rate Select	0: When LIN1.3 is used 1: When LIN 2.x is used	R/W
3 to 1	LPRS [2:0]	Prescaler Clock Select	b3 b1 0 0 0: 1/1 0 0 1: 1/2 0 1 0: 1/4 0 1 1: 1/8 1 0 0: 1/16 1 0 1: 1/32 1 1 0: 1/64 1 1 1: 1/128	R/W
7 to 4	NSPB [3:0]	Bit Sampling Count Select	b7 b4 0 0 0 0: 16 sampling 1 1 1 1: 16 sampling Settings other than the above are prohibited.	R/W

Set the LWBRn register when the OMM0 bit in the LMSTn register is 0 (LIN reset mode).

LWBR0 bit (wake-up baud rate select bit)

When LIN Specification Package Revision 1.3 is used, set the LWBR0 bit in the LWBRn register to 0. This allows the 2.5-Tbit or longer low level width of the input signal to be measured. When LIN Specification Package Revision 2.x is used, set the LWBR0 bit to 1. When the LWBR0 bit is set to 1, fa is always selected as the LIN system clock (f_{LIN}) in LIN wake-up mode regardless of the setting of LCKS bits in the LMDn register (setting of LCKS bits not affected). This allows the 2.5-Tbit or longer low level width of the input signal to be measured.

Setting the baud rate to 19200 bps with fa selected allows 130 μs or longer low level width of the input signal to be detected in LIN wake-up mode regardless of the setting of LCKS bits in the LMDn register.

LPRS bits (prescaler clock select bits)

The LPRS bits select the frequency division ratio for the prescaler.

The LIN communication clock source frequency is divided based on this prescaler.

NSPB bits (bit sampling count select bits)

The NSPB bits select the number of sampling in one Tbit (reciprocal of the baud rate).

In LIN master mode (LIN/UART mode select bits in LIN/UART mode register = 00b), set the NSPB bits to 0000b or 1111b (16 sampling).

(7) LIN/UART Baud Rate Prescaler 0 Register (LBRPn0)

Address: F06C2H

	7	6	5	4	3	2	1	0
Value after reset:	0	0	0	0	0	0	0	0

Bit	Function	Setting Range	R/W
7 to 0	Assuming that the value set in this register is N (0 to 255), the baud rate prescaler 0 divides the frequency of the prescaler clock by N + 1.	00H to FFH	R/W

Set the LBRPn0 register when the OMM0 bit in the LMSTn register is 0 (LIN reset mode).
The value set in this register is used to control the frequency of baud rate clock sources fa, fb, and fc.
Assuming that the value set in this register is N, baud rate prescaler 0 divides the frequency of the clock that is selected by the LPRS bits by N + 1.

(8) LIN/UART Baud Rate Prescaler 1 Register (LBRPn1)

Address: F06C3H

	7	6	5	4	3	2	1	0
Value after reset:	0	0	0	0	0	0	0	0

Bit	Function	Setting Range	R/W
7 to 0	Assuming that the value set in this register is M (0 to 255), the baud rate prescaler 1 divides the frequency of the prescaler clock by M+1.	00H to FFH	R/W

Set the LBRPn1 register when the OMM0 bit in the LMSTn register is 0 (LIN reset mode).
The value set in this register is used to control the frequency of baud rate clock source fd.
Assuming that the value set in this register is M, baud rate prescaler 1 divides the frequency of the clock that is selected by the LPRS bits (prescaler clock select bits) by M+1.

(9) LIN Self-Test Control Register (LSTCn)

Address: F06C4H

	7	6	5	4	3	2	1	0
								LSTM
Value after reset:	0	0	0	0	0	0	0	0

Bit	Symbol	Bit Name	Function	R/W
7 to 0	Writing A7H, 58H, and 01H successively to these bits places the LIN/UART module into LIN self-test mode.			R/W
0	LSTM	LIN Self-Test Mode	0: The module is not in LIN self-test mode 1: The module is in LIN self-test mode.	R/W

The LSTCn register cancels protection of LIN self-test mode.
Set the LSTCn register when the OMM0 bit in the LMSTn register is 0 (LIN reset mode).
Writing A7H, 58H, and 01H successively to the LSTCn register places the module into LIN self-test mode.
When successive writing is completed thus placing LIN self-test mode to be entered, the LSTM bit is set to 1.
Do not write any other value during successive writing.
For making transition to LIN self-test mode, refer to **17.6 LIN Self-Test Mode**.
Reading bits 6 to 1 returns 000000b, and reading bit 7 returns the undefined value.

LSTM bit (LIN self-test mode bit)
When transition to LIN self-test mode is completed, the LSTM bit is set to 1.
For leaving LIN self-test mode, refer to **17.6 LIN Self-Test Mode**.
Writing 1 to this bit does not affect the value of the LSTCn register if it is not a part of successive writing of A7H, 58H, and 01H.

(10) LIN/UART Mode Register (LMDn)

Address: F06C8H

	7	6	5	4	3	2	1	0
	—	—	LRDNFS	LIOS	LCKS[1:0]		LMD[1:0]	
Value after reset:	0	0	0	0	0	0	0	0

Bit	Symbol	Bit Name	Function	R/W
1, 0	LMD[1:0]	LIN/UART Mode Select	b1 b0 0 0: LIN master mode	R/W
3, 2	LCKS[1:0]	LIN System Clock Select	b3 b2 0 0: fa (Clock generated by baud rate prescaler 0) 0 1: fb (1/2 clock generated by baud rate prescaler 0) 1 0: fc (1/8 clock generated by baud rate prescaler 0) 1 1: fd (1/2 clock generated by baud rate prescaler 1)	R/W
4	LIOS	LIN Interrupt Output Select	0: LIN interrupt is used. 1: Transmission interrupt, successful reception interrupt, and reception status interrupt are used.	R/W
5	LRDNFS	LIN Reception Data Noise Filtering Disable	0: The noise filter is enabled. 1: The noise filter is disabled.	R/W
6	—	Reserved	This bit is always read as 0. The write value should always be 0.	R/W
7	—	Reserved	This bit is always read as 0. The write value should always be 0	R/W

Set the LMDn register when the OMM0 bit in the LMSTn register is 0 (LIN reset mode).

LMD[1:0] bits (LIN/UART mode select bits)
The LMD bits select the LIN/UART module mode.
To use the LIN/UART module as a LIN master, set these bits to 00b.
With 00b set, the LIN/UART module operates in LIN master mode.

LCKS[1:0] bits (LIN system clock select bits)
The LCKS bits select the clock to be input to the protocol controller.
With 00b set, the protocol controller is provided with fa (clock generated by baud rate prescaler 0).
With 01b set, the protocol controller is provided with fb (1/2 clock generated by baud rate prescaler 0).
With 10b set, the protocol controller is provided with fc (1/8 clock generated by baud rate prescaler 0).
With 11b set, the protocol controller is provided with fd (1/2 clock generated by baud rate prescaler 1).
When the LWBR0 bit in the LWBRn register is 1 (LIN 2.x is used) and the LMSTn register is 01h (LIN wake-up mode), fa is always input to the protocol controller regardless of the setting of LCKS bits (setting of LCKS bits not affected).

LIOS bit (LIN interrupt output select bit)
The LIOS bit selects the number of interrupt outputs from the LIN/UART module.
With 0 set, the LIN interrupt is generated from the LIN/UART module.
With 1 set, the transmission interrupt, successful reception interrupt, and reception status interrupt are generated from the LIN/UART module.
For each interrupt source, refer to **17.9 Interrupts**.

LRDNFS bit (LIN reception data noise filtering disable bit)
The LRDNFS bit enables or disables the noise filter when receiving data.
With 0 set, the noise filter is enabled when receiving data.
With 1 set, the noise filter is disabled when receiving data.

(11) LIN Break Field Configuration Register/UART Configuration Register (LBFCn)

Address: F06C9H

	7	6	5	4	3	2	1	0
	—	—	BDT[1:0]		BLT[3:0]			
Value after reset:	0	0	0	0	0	0	0	0

Bit	Symbol	Bit Name	Function	R/W
3 to 0	BLT[3:0]	Transmission Break (Low) Width Select	b3 b0 0 0 0 0: 13 Tbits 0 0 0 1: 14 Tbits 0 0 1 0: 15 Tbits : 1 1 1 0: 27 Tbits 1 1 1 1: 28 Tbits	R/W
5, 4	BDT[1:0]	Transmission Break Delimiter (High) Width Select	b5 b4 0 0: 1 Tbit 0 1: 2 Tbits 1 0: 3 Tbits 1 1: 4 Tbits	R/W
6	—	Reserved	This bit is always read as 0. The write value should always be 0.	R/W
7	—	Reserved	This bit is always read as 0. The write value should always be 0.	R/W

Set the LBFCn register when the OMM0 bit in the LMSTn register is 0 (LIN reset mode).
Some combinations of the set values result in the length of a frame exceeding the frame timeout time. Set the appropriate values in this register.

BLT[3:0] bits (transmission break (low) width select bits)
The BLT bits set the break (low) width of the transmission frame header.
13 Tbits to 28 Tbits can be set.

BDT bits (transmission break delimiter (high) width select bits)
The BDT bits set the break delimiter (high) width of the transmission frame header field.
1 Tbit to 4 Tbits can be set.

(12) LIN/UART Space Configuration Register (LSCn)

Address: F06CAH

	7	6	5	4	3	2	1	0
	—	—	IBS[1:0]		—	IBSH[2:0]		
Value after reset:	0	0	0	0	0	0	0	0

Bit	Symbol	Bit Name	Function	R/W
2 to 0	IBSH[2:0]	Inter-Byte Space (Header)/ Response Space Select	b2 b0 0 0 0: 0 Tbit 0 0 1: 1 Tbit 0 1 0: 2 Tbits 0 1 1: 3 Tbits 1 0 0: 4 Tbits 1 0 1: 5 Tbits 1 1 0: 6 Tbits 1 1 1: 7 Tbits	R/W
3	—	Reserved	This bit is always read as 0. The write value should always be 0.	R/W
5, 4	IBS[1:0]	Inter-Byte Space Select	b5 b4 0 0: 0 Tbit 0 1: 1 Tbit 1 0: 2 Tbits 1 1: 3 Tbits	R/W
7, 6	—	Reserved	These bits are always read as 0. The write value should always be 0.	R/W

Set the LSCn register when the OMM0 bit in the LMSTn register is 0 (LIN reset mode).
Some combinations of the set values result in the length of a frame or a response exceeding the timeout time. Set the appropriate values in this register.

IBSH[2:0] bits (inter-byte space (header)/response space select bits)
The IBSH bits set the width of the inter-byte space (header) of the transmission frame header field and the response space.
0 Tbit to 7 Tbits can be set.
The response space setting is enabled only during response transmission; setting is disabled during response reception.
The inter-byte space (header) is equal to the response space.

IBS[1:0] bits (inter-byte space select bits)
The IBS bits set the width of the inter-byte space of the transmission frame response field.
0 Tbit to 3 Tbits can be set.
These bits are enabled only during response transmission; these are disabled during response reception.

(13) LIN Wake-up Configuration Register (LWUPn)

Address: F06CBH

	7	6	5	4	3	2	1	0
	WUTL[3:0]				—	—	—	—
Value after reset:	0	0	0	0	0	0	0	0

Bit	Symbol	Bit Name	Function	R/W
3 to 0	—	Reserved	These bits are always read as 0. The write value should always be 0.	R/W
7 to 4	WUTL[3:0]	Wake-up Transmission Low Width Select	b7 b4 0 0 0 0: 1 Tbit 0 0 0 1: 2 Tbits 0 0 1 0: 3 Tbits 0 0 1 1: 4 Tbits : 1 1 0 0: 13 Tbits 1 1 0 1: 14 Tbits 1 1 1 0: 15 Tbits 1 1 1 1: 16 Tbits	R/W

Set the LWUPn register when the OMM0 bit in the LMSTn register is 0 (LIN reset mode).

WUTL[3:0] bits (wake-up transmission low width select bits)

The WUTL bits set the low width of the wake-up signal transmission.

1 Tbit to 16 Tbits can be set.

When the LWBR0 bit in the LWBRn register is 1 (LIN 2.x is used), fa is always selectd as the LIN system clock (f_{LIN}) regardless of the setting of LCKS bits in the LMDn register (setting of LCKS bits not affected).

(14) LIN Interrupt Enable Register (LIEn)

Address: F06CCH

	7	6	5	4	3	2	1	0
	—	—	—	—	SHIE	ERRIE	FRCIE	FTCIE
Value after reset:	0	0	0	0	0	0	0	0

Bit	Symbol	Bit Name	Function	R/W
0	FTCIE	Successful Frame/Wake-up Transmission Interrupt Enable	0: Disables successful frame/wake-up transmission interrupt. 1: Enables successful frame/wake-up transmission interrupt.	R/W
1	FRCIE	Successful Frame/Wake-up Reception Interrupt Enable	0: Disables successful frame/wake-up reception interrupt. 1: Enables successful frame/wake-up reception interrupt.	R/W
2	ERRIE	Error Detection Interrupt Enable	0: Disables error detection interrupt. 1: Enables error detection interrupt.	R/W
3	SHIE	Successful Header Transmission Interrupt Enable	0: Disables successful header transmission interrupt. 1: Enables successful header transmission interrupt.	R/W
7 to 4	—	Reserved	These bits are always read as 0. The write value should always be 0.	R/W

Set the LIEn register when the OMM0 bit in the LMSTn register is 0 (LIN reset mode).

FTCIE bit (successful frame/wake-up transmission interrupt enable bit)
The FTCIE bit enables or disables interrupt generation upon successful transmission of a frame or a wake-up signal.
With 0 set, the interrupt is not generated when the FTC flag in the LSTn register is set to 1.
With 1 set, the interrupt is generated when the FTC flag in the LSTn register is set to 1.

FRCIE bit (successful frame/wake-up reception interrupt enable bit)
The FRCIE bit enables or disables interrupt generation upon successful reception of a frame or a wake-up signal (counting of low width of the input signal).
With 0 set, the interrupt is not generated when the FRC flag in the LSTn register is set to 1.
With 1 set, the interrupt is generated when the FRC flag in the LSTn register is set to 1.

ERRIE bit (error detection interrupt enable bit)
The ERRIE bit enables or disables interrupt generation upon detection of an error.
With 0 set, the interrupt is not generated when the ERR flag in the LSTn register is set to 1.
With 1 set, the interrupt is generated when the ERR flag in the LSTn register is set to 1.
Interrupt sources can be the bit error, physical bus error, frame/response timeout error, framing error, checksum error, and response preparation error.
Detection of the bit error, physical bus error, frame/response timeout error, and framing error can be enabled or disabled using the LEDEn register.

SHIE bit (successful header transmission interrupt enable bit)
The SHIE bit enables or disables interrupt generation upon successful transmission of a header.
With 0 set, the interrupt is not generated when the HTRC flag in the LSTn register is set to 1.
With 1 set, the interrupt is generated when the HTRC flag in the LSTn register is set to 1.

(15) LIN/UART Error Detection Enable Register (LEDEn)

Address: F06CDH

	7	6	5	4	3	2	1	0
	LTES	—	—	—	FERE	FTERE	PBERE	BERE
Value after reset:	0	0	0	0	0	0	0	0

Bit	Symbol	Bit Name	Function	R/W
0	BERE	Bit Error Detection Enable	0: Disables bit error detection. 1: Enables bit error detection.	R/W
1	PBERE	Physical Bus Error Detection Enable	0: Disables physical bus error detection. 1: Enables physical bus error detection.	R/W
2	FTERE	Timeout Error Detection Enable	0: Disables frame/response timeout error detection. 1: Enables frame/response timeout error detection.	R/W
3	FERE	Framing Error Detection Enable	0: Disables framing error detection. 1: Enables framing error detection.	R/W
4	—	Reserved	This bit is always read as 0. The write value should always be 0.	R/W
5	—	Reserved	This bit is always read as 0. The write value should always be 0.	R/W
6	—	Reserved	This bit is always read as 0. The write value should always be 0.	R/W
7	LTES	Timeout Error Select	0: Frame timeout error 1: Response timeout error	R/W

Set the LEDEn register when the OMM0 bit in the LMSTn register is 0 (LIN reset mode).

BERE bit (bit error detection enable bit)

The BERE bit enables or disables detection of the bit error.

Set 1(the bit error detection enables) to this bit.

The bit error detection result of the bit error is indicated in the BER flag in the LESTn register.

For details of the bit error, refer to **17.4.6 Error Status.**

PBERE bit (physical bus error detection enable bit)

The PBERE bit enables or disables detection of the physical bus error.
With 0 set, the physical bus error is not detected.
With 1 set, the physical bus error is detected.
When this bit is set to 1, the detection result is indicated in the PBER flag in the LESTn register.
For details of the physical bus error, refer to **17.4.6 Error Status**.

FTERE bit (timeout error detection enable bit)

The FTERE bit enables or disables detection of the frame timeout error or the response timeout error.
With 0 set, the frame timeout error or response timeout error is not detected.
With 1 set, the frame timeout error or response timeout error is detected.
When this bit is set to 1, the detection result is indicated in the FTER flag in the LESTn register.
With the LTES bit, either the frame timeout error or response timeout error can be selected.
Do not use the timeout error if response data of 9 bytes or more is to be transmitted or received.
For details of the timeout error, refer to **17.4.6 Error Status**.

FERE bit (framing error detection enable bit)
The FERE bit enables or disables detection of the framing error.
Set 1(the framing error detection enables) to this bit.
The framing error detection result is indicated in the FER flag in the LESTn register.
For details of the framing error, refer to **17.4.6 Error Status**.

LTES bit (timeout error select bit)
The LTES bit selects the specific timeout function to be used.
With 0 set, the timeout function applies to frame timeout.
With 1 set, the timeout function applies to response timeout.
For details of the timeout error, refer to **17.4.6 Error Status**.

(16) LIN/UART Control Register (LCUCn)

Address: F06CEH

	7	6	5	4	3	2	1	0
	—	—	—	—	—	—	OM1	OM0
Value after reset:	0	0	0	0	0	0	0	0

Bit	Symbol	Bit Name	Function	R/W
0	OM0	LIN Reset	0: LIN reset mode is caused. 1: LIN reset mode is canceled.	R/W
1	OM1	LIN Mode Select	0: LIN wake-up mode is caused. 1: LIN operation mode is caused.	R/W
7 to 2	—	Reserved	These bits are always read as 0. The write value should always be 0.	R/W

Set the LCUCn register to 01H to cause a transition to LIN wake-up mode after canceling LIN reset mode, and set the LCUCn register to 03H to cause a transition to LIN operation mode.
In LIN self-test mode, set the LCUCn register to 03H after a transition to LIN self-test mode is completed.
After a value is written to this register, confirm that the value written is actually indicated in the LMSTn register before writing another value.

OM0 bit (LIN reset bit)
The OM0 bit selects either causing a transition to LIN reset mode or canceling LIN reset mode.
With 0 set, LIN reset mode is caused.
With 1 set, LIN reset mode is canceled.

OM1 bit (LIN mode select bit)
The OM1 bit selects the specific operation mode (either LIN wake-up mode or LIN operation mode) after canceling LIN reset mode.
With 0 set, LIN wake-up mode is caused.
With 1 set, LIN operation mode is caused.
This register is valid only when the OMM0 bit in the LMSTn register is 1.
Writing a value to this bit is disabled while the FTS bit in the LTRCn register is 1.

(17) LIN/UART Transmission Control Register (LTRCn)

Address: F06D0H

	7	6	5	4	3	2	1	0
	—	—	—	—	—	—	RTS	FTS
Value after reset:	0	0	0	0	0	0	0	0

Bit	Symbol	Bit Name	Function	R/W
0	FTS	Frame Transmission or Wake-up Transmission/Reception Start	0: Frame transmission or wake-up transmission/reception is stopped. 1: Frame transmission or wake-up transmission/reception is started.	R/W
1	RTS	Response Transmission/Reception Start	0: Response transmission/reception is stopped in frame separate mode. 1: Response transmission/reception is started in frame separate mode.	R/W
2	—	Reserved	This bit is always read as 0. The write value should always be 0.	R/W
7 to 3	—	Reserved	These bits are always read as 0. The write value should always be 0.	R/W

FTS bit (frame transmission or wake-up transmission/reception start bit)
Set the FTS bit to 1 to start frame or wake-up transmission.
Also set this bit to 1 to allow wake-up reception (counting of the low width of the input signal).
Only 1 can be written to this bit; 0 cannot be written.
Writing a value to this bit is disabled when the OMM0 bit in the LMSTn register is 0 (LIN reset mode). This bit is set to 0 upon completion of frame or wake-up communication and transition to LIN reset mode.

RTS bit (response transmission/reception start bit)
Set the RTS bit to 1 in frame separate mode after header transmission is started (FTS bit is 1) and response transmission data is ready. Once set, this bit is automatically cleared to 0 upon completion of frame communication or transition to LIN reset mode.
Only 1 can be written to this bit; 0 cannot be written.
To write 1 to this bit, write 02H to the LTRCn register by using an 8-bit data transfer instruction.
Writing a value to this bit is disabled when the OMM0 bit in the LMSTn register is 0 (LIN reset mode).
Writing a value to this bit is disabled when the FTS bit is 0 (frame transmission or wake-up transmission/reception is halted).

When response data of 9 bytes or more is to be transmitted or received, set this bit to 1 each time a data group (variable from 0 to 8 bytes) is transmitted or received. Once set, this bit is automatically cleared to 0 upon completion of data group communication or transition to LIN reset mode.

(18) LIN/UART Mode Status Register (LMSTn)

Address: F06D1H

	7	6	5	4	3	2	1	0
	—	—	—	—	—	—	OMM1	OMM0
Value after reset:	0	0	0	0	0	0	0	0

Bit	Symbol	Bit Name	Function	R/W
0	OMM0	LIN Reset Status Monitor	0: The module is in LIN reset mode. 1: The module is not in LIN reset mode.	R
1	OMM1	LIN Mode Status Monitor	0: The module is in LIN wake-up mode. 1: The module is in LIN operation mode.	R
7 to 2	—	Reserved	These bits are always read as 0. The write value should always be 0.	R/W

OMM0 bit (LIN reset status monitor)

OMM1 bit (LIN mode status monitor)

The OMM0 and OMM1 bits indicate the current operation mode.

(19) LIN/UART Status Register (LSTn)

Address: F06D2H

	7	6	5	4	3	2	1	0
	HTRC	D1RC	—	—	ERR	—	FRC	FTC
Value after reset:	0	0	0	0	0	0	0	0

Bit	Symbol	Bit Name	Function	R/W
0	FTC	Successful Frame/Wake-up Transmission Flag	0: Frame or wake-up transmission has not been completed. 1: Frame or wake-up transmission has been completed.	R/W
1	FRC	Successful Frame/Wake-up Reception Flag	0: Frame or wake-up reception has not been completed. 1: Frame or wake-up reception has been completed.	R/W
2	—	Reserved	This bit is always read as 0. The write value should always be 0.	R/W
3	ERR	Error Detection Flag	0: No error has been detected. 1: Error has been detected.	R
4, 5	—	Reserved	These bits are always read as 0. The write value should always be 0.	R/W
6	D1RC	Successful Data 1 Reception Flag	0: Data 1 reception has not been completed. 1: Data 1 reception has been completed.	R/W
7	HTRC	Successful Header Transmission Flag	0: Header transmission has not been completed. 1: Header transmission has been completed.	R/W

The LSTn register is automatically cleared to 00H upon transition to LIN reset mode and start of the next communication (the FTS bit in the LTRCn register is 1).
In LIN reset mode, writing to this register is disabled. In LIN reset mode, the register retains 00H.
To clear the specific bits in the register, write 0 to the bits to be cleared and write 1 to the other bits by using an 8-bit data transfer instruction.

FTC flag (successful frame/wake-up transmission flag)
Only 0 can be written to the FTC flag; when 1 is written, the bit retains the value that has been retained before 1 is written.
The FTC flag is set to 1 upon completion of response or wake-up transmission. Here, an interrupt is generated if the FTCIE bit in the LIEn register is 1 (interrupt is enabled). To clear the bit to 0 before the next communication (the FTS bit in the LTRCn register is 1), write 0 to the bit in LIN operation mode or LIN wake-up mode.

When response data of 9 bytes or more is to be transmitted, this bit is set to 1 each time a data group (variable from 0 to 8 bytes) is transmitted. Write 0 before starting transmission of the next data group.

FRC flag (successful frame/wake-up reception flag)
Only 0 can be written to the FRC flag; when 1 is written, the bit retains the value that has been retained before 1 is written.
The FRC flag is set to 1 upon completion of response or wake-up reception. Here, an interrupt is generated if the FRCIE bit in the LIEn register is 1 (interrupt is enabled). To clear the bit to 0 before the next communication (the FTS bit in the LTRCn register is 1), write 0 to the bit in LIN operation mode or LIN wake-up mode.

When response data of 9 bytes or more is to be received, this bit is set to 1 each time a data group (variable from 0 to 8 bytes) is received. Write 0 before starting reception of the next data group.

ERR flag (error detection flag)

The ERR flag is set to 1 upon detection of an error (any of the LESTn register flags is 1). Here, an interrupt is generated if the ERRIE bit in the LIEn register is 1 (interrupt is enabled). To clear the bit to 0 before the next communication (the FTS bit in the LTRCn register is 1), write 0 to the RPER, CSER, FER, FTER, PBER, and BER flags in the LESTn register in LIN operation mode or LIN wake-up mode. This clears the ERR flag to 0.

D1RC flag (successful data 1 reception flag)

Only 0 can be written to the D1RC flag; when 1 is written, the bit retains the value that has been retained before 1 is written. The D1RC flag is set to 1 upon completion of data 1 reception. Here, an interrupt is not generated. To clear the bit to 0 before the next communication (the FTS bit in the LTRCn register is 1), write 0 to the bit in LIN operation mode.

When response data of 9 bytes or more is to be received, this bit is set to 1 each time data 1 of a data group (variable from 0 to 8 bytes) is received. Write 0 before starting reception of the next data group.

HTRC flag (successful header transmission flag)

Only 0 can be written to the HTRC flag; when 1 is written, the bit retains the value that has been retained before 1 is written. The HTRC flag is set to 1 upon completion of header transmission. Here, an interrupt is generated if the SHIE bit in the LIEn register is 1 (interrupt is enabled). To clear the bit to 0 before the next communication (the FTS bit in the LTRCn register is 1), write 0 to the bit in LIN operation mode.

(20) LIN/UART Error Status Register (LESTn)

Address: F06D3H

	7	6	5	4	3	2	1	0
	RPER	—	CSER	—	FER	FTER	PBER	BER
Value after reset:	0	0	0	0	0	0	0	0

Bit	Symbol	Bit Name	Function	R/W
0	BER	Bit Error Flag	0: Bit error has not been detected. 1: Bit error has been detected.	R/W
1	PBER	Physical Bus Error Flag	0: Physical bus error has not been detected. 1: Physical bus error has been detected.	R/W
2	FTER	Timeout Error Flag	0: Frame/response timeout error has not been detected. 1: Frame/response timeout error has been detected.	R/W
3	FER	Framing Error Flag	0: Framing error has not been detected. 1: Framing error has been detected.	R/W
4	—	Reserved	This bit is always read as 0. The write value should always be 0.	R/W
5	CSER	Checksum Error Flag	0: Checksum error has not been detected. 1: Checksum error has been detected.	R/W
6	—	Reserved	This bit is always read as 0. The write value should always be 0.	R/W
7	RPER	Response Preparation Error Flag	0: Response preparation error has not been detected. 1: Response preparation error has been detected.	R/W

The LESTn register is automatically cleared to 00H upon transition to LIN reset mode and start of the next communication (the FTS bit in the LTRCn register is 1).
In LIN reset mode, writing to this register is disabled. In LIN reset mode, the register retains 00H.
When the FTS bit in the LTRCn register is 1 (frame transmission or wake-up transmission/reception is started), do not write a value to this register.
To clear the specific bits in the register, write 0 to the bits to be cleared and write 1 to the other bits by using an 8-bit data transfer instruction.

BER flag (bit error flag)
Only 0 can be written to the BER flag; when 1 is written, the bit retains the value that has been retained before 1 is written.
The BER flag is set to 1 upon bit error detection if the BERE bit in the LEDEn register is 1 (bit error detection is enabled). To clear the bit to 0 before the next communication (the FTS bit in the LTRCn register is 1), write 0 to the bit in LIN operation mode or LIN wake-up mode.

PBER flag (physical bus error flag)
Only 0 can be written to the PBER flag; when 1 is written, the bit retains the value that has been retained before 1 is written.
The PBER flag is set to 1 upon physical bus error detection if the PBERE bit in the LEDEn register is 1 (physical bus error detection is enabled). To clear the bit to 0 before the next communication (the FTS bit in the LTRCn register is 1), write 0 to the bit in LIN operation mode or LIN wake-up mode.

FTER flag (timeout error flag)
Only 0 can be written to the FTER flag; when 1 is written, the bit retains the value that has been retained before 1 is written.
The FTER flag is set to 1 upon frame timeout error or response timeout error detection if the FTERE bit in the LEDEn register is 1 (frame/response timeout error detection is enabled). To clear the bit to 0 before the next communication (the FTS bit in the LTRCn register is 1), write 0 to the bit in LIN operation mode.

FER flag (framing error flag)

Only 0 can be written to the FER flag; when 1 is written, the bit retains the value that has been retained before 1 is written. The FER flag is set to 1 upon framing error detection if the FERE bit in the LEDEn register is 1 (framing error detection is enabled). To clear the bit to 0 before the next communication (the FTS bit in the LTRCn register is 1), write 0 to the bit in LIN operation mode.

CSER flag (checksum error flag)

Only 0 can be written to the CSER flag; when 1 is written, the bit retains the value that has been retained before 1 is written. The CSER flag is set to 1 upon checksum error detection. To clear the bit to 0 before the next communication (the FTS bit in the LTRCn register is 1), write 0 to the bit in LIN operation mode.

RPER flag (response preparation error flag)

Only 0 can be written to the RPER flag; when 1 is written, the bit retains the value that has been retained before 1 is written. The RPER flag is set to 1 upon response preparation error detection. To clear the bit to 0 before the next communication (the FTS bit in the LTRCn register is 1), write 0 to the bit in LIN operation mode.

(21) LIN/UART Data Field Configuration Register (LDFCn)

Address: F06D4H

	7	6	5	4	3	2	1	0
	LSS	FSM	CSM	RFT	RFDL[3:0]			
Value after reset:	0	0	0	0	0	0	0	0

Bit	Symbol	Bit Name	Function	R/W
3 to 0	RFDL[3:0]	Response Field Length Select	b3 b0 0 0 0 0: 0 byte (+ checksum) 0 0 0 1: 1 byte (+ checksum) 0 0 1 0: 2 bytes (+ checksum) : 0 1 1 1: 7 bytes (+ checksum) 1 0 0 0: 8 bytes (+ checksum) Settings other than the above are prohibited.	R/W
4	RFT	Response Field Communication Direction Select	0: Reception 1: Transmission	R/W
5	CSM	Checksum Select	0: Classic checksum mode 1: Enhanced checksum mode	R/W
6	FSM	Frame Separate Mode Select	0: Frame separate mode is not set. 1: Frame separate mode is set.	R/W
7	LSS	Transmission/Reception Continuation Select	0: The data group to be transmitted/received next is the last one. 1: The data group to be transmitted/received next is not the last one. (Checksum is not included.)	R/W

RFDL[3:0] bits (response field length select bits)

The RFDL bits set the length of the response field data.
The data length can be 0 to 8 bytes excluding the checksum size.
To transmit response data with the FSM bit set to 0 (not frame separate mode), set the RFDL bits before header transmission (the FTS bit in the LTRCn register is 0).
To transmit response data with the FSM bit set to 1 (frame separate mode), set the RFDL bits before response transmission (the RTS bit in the LTRCn register is 0).
To receive response data, set the RFDL bits before header transmission (the FTS bit in the LTRCn register is 0).

When response data of 9 bytes or more is to be transmitted or received, set the RFDL bits before data group transmission/reception (RTS bit in the LTRCn register is 0).
During communication of response data of 9 bytes or more, only the last data group (the LSS bit is 0) includes the checksum, and no other groups (the LSS bit is 1) include the checksum.

RFT bit (response field communication direction select bit)
The RFT bits set the direction of the response field/wake-up signal communication.
With 0 set, reception is performed in the response field. In LIN wake-up mode, wake-up reception is performed (low width of the input signal is counted).
With 1 set, transmission is performed in the response field. In LIN wake-up mode, wake-up transmission is performed.
Set this bit when the FTS bit in the LTRCn register is 0 (frame transmission or wake-up transmission/reception is halted).
When response data of 9 bytes or more is to be transmitted or received, do not change the RFT bit setting after the first data group through the last data group.

CSM bit (checksum select bit)
The CSM bit sets the checksum mode.
With 0 set, classic checksum mode is selected.
With 1 set, enhanced checksum mode is selected.
When the timeout error is used (the FTERE bit in the LEDEn register is 1), the specific timeout time depends on the setting of this bit. For details of the bit error, refer to **17.4.6 Error Status**.
Set this bit when the FTS bit in the LTRCn register is 0 (frame transmission or wake-up transmission/reception is halted).
When response of 9 bytes or more is to be transmitted or received, do not change the CSM bit setting after the first data group through the last data group.
During communication of response data of 9 bytes or more, only the last data group (the LSS bit is 0) includes the checksum, and no other groups (the LSS bit is 1) include the checksum.

FSM bit (frame separate mode select bit)
The FSM bit sets the response communication mode.
With 0 set, frame separate mode is not selected. In this case, after header transmission is started (the FTS bit in the LTRCn register is 1), response is transmitted/received without the RTS bit in the LTRCn register being set.
With 1 set, frame separate mode is selected. If the RTS bit in the LTRCn register is set to 1 during header transmission, response is transmitted after successful header transmission.
For response reception (the RFT bit is 0), set the FSM bit to 0.
When causing a transition to LIN self-test mode, set this bit to 0 before transition.
For details of frame separate mode, refer to **17.4.3 (1) (a) Frame Separate Mode**.
Set this bit when the FTS bit in the LTRCn register is 0 (frame transmission or wake-up transmission/reception is halted).

When response data of 9 bytes or more is to be transmitted or received, set the FSM bit to 1.

LSS bit (transmission/reception continuation select bit)
The LSS bit shows that the next data group to be transmitted or received is not the last one when response data of 9 bytes or more is to be transmitted or received.
With 0 set, data and checksum are transmitted or received because the next data group to be transmitted or received is the last one.
With 1 set, only data is transmitted or received, and the checksum is not included because the next data group to be transmitted or received is not the last one.
Set the LSS bit only when the FSM bit is 1 (frame separate mode) and response data of 9 bytes or more is to be transmitted or received.
Set this bit while the RTS bit in the LTRCn register is 0 (response transmission/reception stopped).

(22) LIN/UART ID Buffer Register (LIDBn)

Address: F06D5H

	7	6	5	4	3	2	1	0
	IDP[1:0]		ID[5:0]					
Value after reset:	0	0	0	0	0	0	0	0

Bit	Symbol	Bit Name	Function	R/W
5 to 0	ID[5:0]	ID Setting	Sets the 6-bit ID value to be transmitted in the ID field.	R/W
7, 6	IDP[1:0]	Parity Setting	Sets the parity bits (P) to be transmitted in the ID field.	R/W

Set the LIDBn register when the FTS bit in the LTRCn register is 0 (frame transmission or wake-up transmission/reception is halted).

In LIN self-test mode, this register operates as follows:
Write the value to be transmitted before communication. The reversed value of the value received can be read from the register after frame transmission/reception is completed (after loopback).
For details of LIN self-test mode, refer to **17.6 LIN Self-Test Mode**.

ID bits (ID setting bits)
The ID bit sets the 6-bit ID value to be transmitted in the ID field of the LIN frame.

IDP bits (parity setting bits)
The IDP bits set the parity bits (P0 and P1) to be transmitted in the ID field of the LIN frame.
The IDP0 bit is P0 and the IDP1 bit is P1.
Since parity is not automatically calculated, set the calculation result. Note that if the erroneous result is set, it is transmitted as is.

(23) LIN Checksum Buffer Register (LCBRn)

Address: F06D6H

	7	6	5	4	3	2	1	0
Value after reset:	0	0	0	0	0	0	0	0

Bit	Function	R/W
7 to 0	Holds the checksum value transmitted or received.	R/W

In LIN mode, this register operates as follows:

- When the RFT bit in the LDFCn register is 1 (transmission):

  The value transmitted can be read from the register. Read the value after transmission is completed.

  Writing to this register is invalid.

- When the RFT bit in the LDFCn register is 0 (reception):

  The value received can be read from the register. Read the value after reception is completed.

  Writing to this register is invalid.

In LIN self-test mode, this register operates as follows:

- When the RFT bit in the LDFCn register is 1 (transmission):

  The reversed value of the value transmitted can be read from the register after frame transmission is completed (after loopback).

- When the RFT bit in the LDFCn register is 0 (reception):

  Write the value to be received before communication.
  The reversed value of the value received can be read from the register after frame transmission/reception is completed (after loopback).

For details of LIN self-test mode, refer to **17.6 LIN Self-Test Mode**.

Set the LCBRn register when the FTS bit in the LTRCn register is 0 (frame transmission or wake-up transmission/reception is halted).

When response data of 9 bytes or more is to be transmitted or received, the checksum is appended only to the last data group; this register is not updated for the other data groups.

(24) LIN/UART Data Buffer m Register (LDBnm) (m = 1 to 8)

Address: LDBn1 F06D8H, LDBn2 F06D9H, LDBn3 F06DAH, LDBn4 F06DBH, LDBn5 F06DCH, LDBn6 F06DDH, LDBn7 F06DEH, LDBn8 F06DFH

	7	6	5	4	3	2	1	0
Value after reset:	0	0	0	0	0	0	0	0

Bit	Function	Setting Range	R/W
7 to 0	Sets the data to be transmitted or allows the received data to be read.	00H to FFH	R/W

For response transmission:
These registers set the data to be transmitted in the response field.
Use these registers with the following settings.

- RFT in LDFCn register is 1 (transmission)
- FSM in LDFCn register is 0 (not frame separate mode)
- FTS bit in LTRCn register is 0 (frame transmission or wake-up transmission/reception is halted)

or

- RFT in LDFCn register is 1 (transmission)
- FSM in LDFCn register is 1 (frame separate mode)
- RTS in LTRCn register is 0 (response transmission/reception is halted)

For response reception:
These registers hold the data received in the response field.
<R> The received data is overwritten. If an error is detected, the data up to the byte in which the error was detected are stored in the register.
Do not read these registers when the FTS bit is 1 (frame transmission or wake-up transmission/reception is started)

For transmission of response data of 9 bytes or more:
Use these registers with the following settings.

- RFT in LDFCn register is 1 (transmission)
- FSM in LDFCn register is 1 (frame separate mode)
- RTS in LTRCn register is 0 (response transmission/reception is halted)

For reception of response data of 9 bytes or more:
Do not read these registers when the RTS bit is 1 (response transmission/reception is started).

In LIN self-test mode, these registers operate as follows:
Write the value to be transmitted before communication.
The reversed value of the value received can be read from the register after frame transmission/reception is completed (after loopback).

For details of LIN self-test mode, refer to **17.6 LIN Self-Test Mode**.

17.2.2 LIN Registers for Slave Mode

(1) Input Switch Control Register (ISC)

The ISC2 and ISC3 bits in the ISC register are used in the LIN/UART module (RLIN3).
Setting bit 2 or bit 3 to 1 selects the input signal of the serial data input pin for the LIN/UART module as the external interrupt input.
This register can be set by a 1-bit or 8-bit memory manipulation instruction.
Reset signal generation sets this register to 00H.

Address: F0073H After reset: 00H R/W

Symbol	7	6	5	4	3	2	1	0
ISC	0	0	0	0	ISC3	ISC2	0	ISC0

ISC3	Switching inputs for external interrupt INTP12
0	INTP12 pin input signal is set as external interrupt input.
1	LRXD1 pin input signal is set as external interrupt input.

ISC2	Switching inputs for external interrupt INTP11
0	INTP11 pin input signal is set as external interrupt input.
1	LRXD0 pin input signal is set as external interrupt input.

ISC0	Switching inputs for external interrupt INTP0
0	INTP0 pin input signal is set as external interrupt input. (normal operation)
1	RXD0 pin input signal is set as external interrupt input. (wake-up signal detection)

Caution Bits 7 to 4 and 1 should always be set to 0.

(2) LIN Channel Select Register (LCHSEL)

Address: F007BH

	7	6	5	4	3	2	1	0
	—	—	—	—	—	—	—	LSEL0
Value after reset:	0	0	0	0	0	0	0	0

Bit	Symbol	Bit Name	Function	R/W
0	LSEL0	LIN Channel Select	0: Selects LIN0. (LIN0 registers can be accessed.) 1: Selects LIN1. (LIN1 registers can be accessed.)	R/W
7 to 1	—	Reserved	These bits are always read as 0. The write value should always be 0.	R/W

LSEL0 bit (LIN channel select bit)

Since the LIN/UART module registers are not directly mapped on the CPU memory map, they should be accessed via the register windows. The register windows are mapped on addresses F06C1H to F06E9H.
Setting a value to the LSEL0 bit maps all the registers of the corresponding channel on the register window.
Setting the LSEL0 bit to 0 maps the LIN0 registers.
Setting the LSEL0 bit to 1 maps the LIN1 registers.

With the product incorporating one channel, set the LSEL0 bit to 0.
With the product incorporating two channels, set the LSEL0 bit to the applicable value before accessing a register of the channel to use.

(3) Peripheral Enable Register 2 (PER2)

The PER2 register is used to enable or disable supplying the clock to the peripheral hardware. Clock supply to the hardware that is not used is also stopped so as to decrease the power consumption and noise.

To use the peripheral functions which are controlled by this register, set (1) the bit corresponding to each function before specifying the initial settings of the peripheral functions.

This register can be set by a 1-bit or 8-bit memory manipulation instruction.

Reset signal generation sets this register to 00H.

Address: F02C1H After reset: 00H R/W

Symbol	7	6	5	4	<3>	<2>	1	<0>
PER2	0	0	0	0	LIN1EN Note 1	LIN0EN	0	CAN0EN Note 2

LIN1EN Note 1	Control of LIN1 input clock supply
0	Stops input clock supply. • Disables writing to the SFR used by LIN1. • LIN1 is in the reset state.
1	Enables input clock supply. • Enables reading from and writing to the SFR used by LIN1.

LIN0EN	Control of LIN0 input clock supply
0	Stops input clock supply. • Disables writing to the SFR used by LIN0. • LIN0 is in the reset state.
1	Enables input clock supply. • Enables reading from and writing to the SFR used by LIN0.

CAN0EN Note 2	Control of CAN input clock supply
0	Stops input clock supply. • Disables writing to the SFR used by CAN. • CAN is in the reset state.
1	Enables input clock supply. • Enables reading from and writing to the SFR used by CAN.

Notes 1. Only in the RL78/F14 products with at least 128 Kbytes of code flash memory and the 100-pin products of the RL78/F14.

2. Only in the RL78/F13 (CAN and LIN incorporated) and RL78/F14 products.

Caution Be sure to clear the following bits to 0.

Bits 0, 1, 3, 4, 5, 6, and 7 in the RL78/F13 (LIN incorporated) products

Bits 1, 3, 4, 5, 6, and 7 in the RL78/F13 (CAN and LIN incorporated) products and the RL78/F14 products with 30, 32, 48, 64, or 80 pins and up to 96 Kbytes of code flash memory

Bits 1, 4, 5, 6, and 7 in the RL78/F14 products with at least 128 Kbytes of code flash memory and the 100-pin products of the RL78/F14

(4) LIN Clock Select Register (LINCKSEL)

This register is used to control the communication clock source supplied to the LIN.

Address: F02C3H After reset: 00H R/W

Symbol	7	6	<5>	<4>	3	2	<1>	<0>
LINCKSEL	0	0	LIN1MCKE Note	LIN0MCKE	0	0	LIN1MCK Note	LIN0MCK

LIN1MCKE Note	Control of supplying or stopping LIN1 communication clock source
0	Stops LIN communication clock source supply.
1	Enables LIN communication clock source supply.

LIN0MCKE	Control of supplying or stopping LIN0 communication clock source
0	Stops LIN communication clock source supply.
1	Enables LIN communication clock source supply.

LIN1MCK Note	Control of selecting LIN1 communication clock supply
0	Selects the f_{CLK} clock.
1	Selects the f_{MX} clock.

LIN0MCK	Control of selecting LIN0 communication clock source
0	Selects the f_{CLK} clock.
1	Selects the f_{MX} clock.

Note Only in the RL78/F14 products with at least 48 pins and 128 Kbytes or more of code flash memory and the 100-pin products of the RL78/F14.

Cautions 1. Select the LINn operating clock with the LINnMCK bit before setting the LINnMCKE (n = 0, 1) bit to 1 (operating clock is supplied).

2. When operating LINn in SNOOZE mode, set the LINnMCK bit to 0.

3. In case of LINnMCK is set to 1, do not used the timeout error detection.
In that case, set at least 1.2 times the frequency of the LIN communication clock source to the f_{CLK} clock.

(5) External interrupt rising edge enable registers (EGP0, EGP1), external interrupt falling edge enable registers (EGN0, EGN1)

For details, see **21.3.4 External interrupt rising edge enable registers (EGP0, EGP1), external interrupt falling edge enable registers (EGN0, EGN1).**

(6) LIN Wake-up Baud Rate Select Register (LWBRn)

Address: F06C1H

	7	6	5	4	3	2	1	0
	NSPB[3:0]				LPRS[2:0]			—
Value after reset:	0	0	0	0	0	0	0	0

Bit	Symbol	Bit Name	Function	R/W
0	—	Reserved	This bit is always read as 0. The write value should always be 0.	R/W
3 to 1	LPRS [2:0]	Prescaler Clock Select	b3 b1 0 0 0: 1/1 0 0 1: 1/2 0 1 0: 1/4 0 1 1: 1/8 1 0 0: 1/16 1 0 1: 1/32 1 1 0: 1/64 1 1 1: 1/128	R/W
7 to 4	NSPB [3:0]	Bit Sampling Count Select	b7 b4 0 0 0 0: 16 sampling 0 0 1 1: 4 sampling 0 1 1 1: 8 sampling 1 1 1 1: 16 sampling Settings other than the above are prohibited.	R/W

Set the LWBRn register when the OMM0 bit in the LMSTn register is 0 (LIN reset mode).

LPRS[2:0] bits (prescaler clock select bits)

The LPRS bits select the frequency division ratio for the prescaler.
The LIN communication clock source frequency is divided based on this prescaler.
In LIN slave mode with auto baud rate (LIN/UART mode select bits in LIN/UART mode register = 10b), set these bits according to the target baud rate so that the frequency of the prescaler clock is the corresponding value from the list.

[Target baud rate]	[Frequency of prescaler clock]
1 kbps to 20 kbps:	4 MHz **Note**
1 kbps to less than 2.4 kbps:	4 MHz
2.4 kbps to 20 kbps:	8 MHz to 12 MHz

Note Set the NSPB bits to 0011b (4 sampling).

NSPB[3:0] bits (bit sampling count select bits)

The NSPB bits select the number of sampling in one Tbit (reciprocal of the baud rate).
In LIN slave mode with auto baud rate (LIN/UART mode select bits in LIN/UART mode register = 10b), set the NSPB bits to 0011b (4 sampling) or 0111b (8 sampling).
In LIN slave mode with fixed baud rate (LIN/UART mode select bits in LIN/UART mode register = 11b), set the NSPB bits to 0000b or 1111b (16 sampling).

(7) LIN/UART Baud Rate Prescaler Register (LBRPn)

Address: F06C3H, F06C2H

	LBRPn1								LBRPn0							
	15	14	13	12	11	10	9	8	7	6	5	4	3	2	1	0
Value after reset:	0	0	0	0	0	0	0	0	0	0	0	0	0	0	0	0

Bit	Function	Setting Range	R/W
15 to 0	Assuming that the value set in this register is L (0 to 65535), the baud rate prescaler divides the frequency of the prescaler clock by L + 1.	0000H to FFFFH	R/W

Set the LBRPn register when the OMM0 bit in the LMSTn register is 0 (LIN reset mode).

Assuming that the value set in this register is L, the baud rate prescaler divides the frequency of the clock that is selected by the LPRS bits (prescaler clock select bits) in the LWBRn register by L + 1.
The LBRPn register can be accessed in 8-bit units using the following registers.
- Lower 8 bits: LIN/UART baud rate prescaler 0 register (LBRPn0); address F06C2H
- Upper 8 bits: LIN/UART baud rate prescaler 1 register (LBRPn1); address F06C3H

Remark When a sync field reception succeeded in LIN slave mode [auto baud rate], baud rate correction result is set to LBRPn register automatically.

(8) LIN Self-Test Control Register (LSTCn)

Address: F06C4H

	7	6	5	4	3	2	1	0
								LSTM
Value after reset:	0	0	0	0	0	0	0	0

Bit	Symbol	Bit Name	Function	R/W
7 to 0	Writing A7H, 58H, and 01H successively to these bits places the module into LIN self-test mode.			R/W
0	LSTM	LIN Self-Test Mode	0: The module is not in LIN self-test mode 1: The module is in LIN self-test mode.	R/W

The LSTCn register cancels protection of LIN self-test mode.
Set the LSTCn register when the OMM0 bit in the LMSTn register is 0 (LIN reset mode).
Writing A7H, 58H, and 01H successively to the LSTCn register places the module into LIN self-test mode.
When successive writing is completed thus placing LIN self-test mode to be entered, the LSTM bit is set to 1.
Do not write any other value during successive writing.
For making transition to LIN self-test mode, refer to **17.6 LIN Self-Test Mode**.
Reading bits 6 to 1 returns 000000b, and reading bit 7 returns the undefined value.

LSTM bit (LIN self-test mode bit)
When transition to LIN self-test mode is completed, the LSTM bit is set to 1.
For leaving LIN self-test mode, refer to **17.6 LIN Self-Test Mode**.
Writing 1 to this bit does not affect the value of the LSTCn register if it is not a part of successive writing of A7H, 58H, and 01H.

(9) LIN/UART Mode Register (LMDn)

Address: F06C8H

	7	6	5	4	3	2	1	0
	—	—	LRDNFS	LIOS	—	—	LMD[1:0]	
Value after reset:	0	0	0	0	0	0	0	0

Bit	Symbol	Bit Name	Function	R/W
1, 0	LMD[1:0]	LIN/UART Mode Select	b1 b0 1 0: LIN slave mode (auto baud rate) 1 1: LIN slave mode (fixed baud rate)	R/W
3, 2	—	Reserved	These bits are always read as 0. The write value should always be 0.	R/W
4	LIOS	LIN Interrupt Output Select	0: LIN interrupt is used. 1: Transmission interrupt, successful reception interrupt, and reception status interrupt are used.	R/W
5	LRDNFS	LIN Reception Data Noise Filtering Disable	0: The noise filter is enabled. 1: The noise filter is disabled.	R/W
6	—	Reserved	This bit is always read as 0. The write value should always be 0.	R/W
7	—	Reserved	This bit is always read as 0. The write value should always be 0.	R/W

Set the LMDn register when the OMM0 bit in the LMSTn register is 0 (LIN reset mode).

LMD[1:0] bits (LIN/UART mode select bits)
The LMD bits select the LIN/UART module mode.
To use the LIN/UART module as a LIN slave, set these bits to 10b or 11b.
With 10b set, the LIN/UART module operates in LIN slave mode with auto baud rate.
With 11b set, the LIN/UART module operates in LIN slave mode with fixed baud rate.

LIOS bit (LIN interrupt output select bit)
The LIOS bit selects the number of interrupt outputs from the LIN/UART module.
With 0 set, the LIN interrupt is generated from the LIN/UART module.
With 1 set, the transmission interrupt, successful reception interrupt, and reception status interrupt are generated from the LIN/UART module.
For each interrupt source, refer to **17.9 Interrupts**.

LRDNFS bit (LIN reception data noise filtering disable bit)
The LRDNFS bit enables or disables the noise filter when receiving data.
With 0 set, the noise filter is enabled when receiving data.
With 1 set, the noise filter is disabled when receiving data.

(10) LIN Break Field Configuration Register/UART Configuration Register (LBFCn)

Address: F06C9H

	7	6	5	4	3	2	1	0
	—	—	—	—	—	—	—	BLT
Value after reset:	0	0	0	0	0	0	0	0

Bit	Symbol	Bit Name	Function	R/W
0	BLT	Reception Break (Low) Width Select	0: Reception break (low width) of 9.5/10 or more Tbits is detected. 1: Reception break (low width) of 10.5/11 or more Tbits is detected.	R/W
6 to 1	—	Reserved	These bits are always read as 0. The write value should always be 0.	R/W
7	—	Reserved	This bit is always read as 0. The write value should always be 0.	R/W

Set the LBFCn register when the OMM0 bit in the LMSTn register is 0 (LIN reset mode).

BLT bit (reception break (low) width select bit)
The BLT bit sets the critical low width of the received data to be determined as break.

In LIN slave mode with auto baud rate (the LMD bits in the LMDn register are 10b):
With 0 set, the low width of 10 or more Tbits is detected.
With 1 set, the low width of 11 or more Tbits is detected.

In LIN slave mode with fixed baud rate (the LMD bits in the LMDn register are 11b):
With 0 set, the low width of 9.5 or more Tbits is detected.
With 1 set, the low width of 10.5 or more Tbits is detected.

(11) LIN/UART Space Configuration Register (LSCn)

Address: F06CAH

	7	6	5	4	3	2	1	0
	—	—	IBS[1:0]		—	RS[2:0]		
Value after reset:	0	0	0	0	0	0	0	0

Bit	Symbol	Bit Name	Function	R/W
2 to 0	RS[2:0]	Response Space Select	b2 b0 0 0 0: 0 Tbit 0 0 1: 1 Tbit 0 1 0: 2 Tbits 0 1 1: 3 Tbits 1 0 0: 4 Tbits 1 0 1: 5 Tbits 1 1 0: 6 Tbits 1 1 1: 7 Tbits	R/W
3	—	Reserved	This bit is always read as 0. The write value should always be 0.	R/W
5, 4	IBS[1:0]	Inter-Byte Space Select	b5 b4 0 0: 0 Tbit 0 1: 1 Tbit 1 0: 2 Tbits 1 1: 3 Tbits	R/W
7, 6	—	Reserved	These bits are always read as 0. The write value should always be 0.	R/W

Set the LSCn register when the OMM0 bit in the LMSTn register is 0 (LIN reset mode).
Setting is enabled only during response transmission; setting is disabled during response reception.
Some combinations of the set values result in the length of a frame or a response exceeding the timeout time. Set the appropriate values in this register.

RS[2:0] bits (response space select bits)
The RS bits set the width of the response space of the response transmission.
0 Tbit to 7 Tbits can be set.

IBS[1:0] bits (inter-byte space select bits)
The IBS bits set the width of the inter-byte space of the response transmission.
0 Tbit to 3 Tbits can be set.

(12) LIN Wake-up Configuration Register (LWUPn)

Address: F06CBH

	7	6	5	4	3	2	1	0
	WUTL[3:0]				—	—	—	—
Value after reset:	0	0	0	0	0	0	0	0

Bit	Symbol	Bit Name	Function	R/W
3 to 0	—	Reserved	These bits are always read as 0. The write value should always be 0.	R/W
7 to 4	WUTL[3:0]	Wake-up Transmission Low Width Select	b7 b4 0 0 0 0: 1 Tbit 0 0 0 1: 2 Tbits 0 0 1 0: 3 Tbits 0 0 1 1: 4 Tbits : 1 1 0 0: 13 Tbits 1 1 0 1: 14 Tbits 1 1 1 0: 15 Tbits 1 1 1 1: 16 Tbits	R/W

Set the LWUPn register when the OMM0 bit in the LMSTn register is 0 (LIN reset mode).

WUTL[3:0] bits (wake-up transmission low width select bits)
The WUTL bits set the low width of the wake-up frame transmission.
1 Tbit to 16 Tbits can be set.

(13) LIN Interrupt Enable Register (LIEn)

Address: F06CCH

	7	6	5	4	3	2	1	0
	—	—	—	—	SHIE	ERRIE	FRCIE	FTCIE
Value after reset:	0	0	0	0	0	0	0	0

Bit	Symbol	Bit Name	Function	R/W
0	FTCIE	Successful Frame/Wake-up Transmission Interrupt Enable	0: Disables successful response/wake-up transmission interrupt. 1: Enables successful response/wake-up transmission interrupt.	R/W
1	FRCIE	Successful Frame/Wake-up Reception Interrupt Enable	0: Disables successful response/wake-up reception interrupt. 1: Enables successful response/wake-up reception interrupt.	R/W
2	ERRIE	Error Detection Interrupt Enable	0: Disables error detection interrupt. 1: Enables error detection interrupt.	R/W
3	SHIE	Successful Header Reception Interrupt Enable	0: Disables successful header reception interrupt. 1: Enables successful header reception interrupt.	R/W
7 to 4	—	Reserved	These bits are always read as 0. The write value should always be 0.	R/W

Set the LIEn register when the OMM0 bit in the LMSTn register is 0 (LIN reset mode).

FTCIE bit (successful frame/wake-up transmission interrupt enable bit)
The FTCIE bit enables or disables interrupt generation upon successful transmission of a response or a wake-up signal.
With 0 set, the interrupt is not generated when the FTC flag in the LSTn register is set to 1.
With 1 set, the interrupt is generated when the FTC flag in the LSTn register is set to 1.

FRCIE bit (successful frame/wake-up reception interrupt enable bit)
The FRCIE bit enables or disables interrupt generation upon successful reception of a response or a wake-up signal (counting of low width of the input signal).
With 0 set, the interrupt is not generated when the FRC flag in the LSTn register is set to 1.
With 1 set, the interrupt is generated when the FRC flag in the LSTn register is set to 1.

ERRIE bit (error detection interrupt enable bit)
The ERRIE bit enables or disables interrupt generation upon detection of an error.
With 0 set, the interrupt is not generated when the ERR flag in the LSTn register is set to 1.
With 1 set, the interrupt is generated when the ERR flag in the LSTn register is set to 1.
Interrupt sources can be the bit error, frame/response timeout error, framing error, sync field error, checksum error, ID parity error, and response preparation error.
Detection of the bit error, frame/response timeout error, framing error, sync field error, and ID parity error can be enabled or disabled using the LEDEn register.

SHIE bit (successful header reception interrupt enable bit)
The SHIE bit enables or disables interrupt generation upon successful transmission of a header.
With 0 set, the interrupt is not generated when the HTRC flag in the LSTn register is set to 1.
With 1 set, the interrupt is generated when the HTRC flag in the LSTn register is set to 1.

(14) LIN/UART Error Detection Enable Register (LEDEn)

Address: F06CDH

	7	6	5	4	3	2	1	0
	LTES	IPERE	—	SFERE	FERE	TERE	—	BERE
Value after reset:	0	0	0	0	0	0	0	0

Bit	Symbol	Bit Name	Function	R/W
0	BERE	Bit Error Detection Enable	0: Disables bit error detection. 1: Enables bit error detection.	R/W
1	—	Reserved	This bit is always read as 0. The write value should always be 0.	R/W
2	TERE	Timeout Error Detection Enable	0: Disables frame/response timeout error detection. 1: Enables frame/response timeout error detection.	R/W
3	FERE	Framing Error Detection Enable	0: Disables framing error detection. 1: Enables framing error detection.	R/W
4	SFERE	Sync Field Error Detection Enable	0: Disables sync field error detection. 1: Enables sync field error detection.	R/W
5	—	Reserved	This bit is always read as 0. The write value should always be 0.	R/W
6	IPERE	ID Parity Error Detection Enable	0: Disables ID parity error detection. 1: Enables ID parity error detection.	R/W
7	LTES	Timeout Error Select	0: Frame timeout error 1: Response timeout error	R/W

Set the LEDEn register when the OMM0 bit in the LMSTn register is 0 (LIN reset mode).

BERE bit (bit error detection enable bit)
The BERE bit enables or disables detection of the bit error.
Set 1(the bit error detection enables) to this bit.
The bit error detection result of the bit error is indicated in the BER flag in the LESTn register.
For details of the bit error, refer to **17.4.6 Error Status**.

TERE bit (timeout error detection enable bit)
The TER bit enables or disables detection of the frame timeout error or the response timeout error.
With 0 set, the frame timeout error or response timeout error is not detected.
With 1 set, the frame timeout error or response timeout error is detected.
When this bit is set to 1, the detection result is indicated in the TER flag in the LESTn register.
With the LTES bit, either the frame timeout error or response timeout error can be selected.
Do not use the timeout error in LIN slave mode with auto baud rate (LIN/UART mode select bits in LIN/UART mode register = 10b).
Do not use the timeout error if response data of 9 bytes or more is to be transmitted or received.
For details of the timeout error, refer to **17.4.6 Error Status**.

FERE bit (framing error detection enable bit)
The FERE bit enables or disables detection of the framing error.
Set 1(the framing error detection enables) to this bit.
The framing error detection result is indicated in the FER flag in the LESTn register.
For details of the framing error, refer to **17.4.6 Error Status**.

SFERE bit (sync field error detection enable bit)

The SFERE bit enables or disables detection of the sync field error.
With 0 set, the sync field error is not detected.
With 1 set, the sync field error is detected.
Upon detection of the sync field error, the system is placed in the next header wait state, irrespective of the setting of this bit.
When this bit is set to 1, the detection result is indicated in the SFER flag in the LESTn register.
For details of the sync field error, refer to **17.4.6 Error Status**.

IPERE bit (ID parity error detection enable bit)

The IPERE bit enables or disables detection of the ID parity error.
With 0 set, the ID parity error is not detected.
With 1 set, the ID parity error is detected.
When this bit is set to 1, the detection result is indicated in the IPER flag in the LESTn register.
For details of the ID parity error, refer to **17.4.6 Error Status**.

LTES bit (timeout error select bit)

The LTES bit selects the specific timeout function to be used.
With 0 set, the timeout function applies to frame timeout.
With 1 set, the timeout function applies to response timeout.
For details of the timeout error, refer to **17.4.6 Error Status**.

(15) LIN/UART Control Register (LCUCn)

Address: F06CEH

	7	6	5	4	3	2	1	0
	—	—	—	—	—	—	OM1	OM0
Value after reset:	0	0	0	0	0	0	0	0

Bit	Symbol	Bit Name	Function	R/W
0	OM0	LIN Reset	0: LIN reset mode is caused. 1: LIN reset mode is canceled.	R/W
1	OM1	LIN Mode Select	0: LIN wake-up mode is caused. 1: LIN operation mode is caused.	R/W
7 to 2	—	Reserved	These bits are always read as 0. The write value should always be 0.	R/W

Set the LCUCn register to 01H to cause a transition to LIN wake-up mode after canceling LIN reset mode, and set the LCUCn register to 03H to cause a transition to LIN operation mode.
In LIN self-test mode, set the LCUCn register to 03H after a transition to LIN self-test mode is completed.
When the LIN/UART module makes a transition from the LIN operating mode to the LIN reset mode while operating as a LIN slave (at a fixed baud rate), write 1 to the LIN0EN bit (or the LIN1EN bit) in the PER2 register after having cleared the given bit to 0.
After a value is written to this register, confirm that the value written is actually indicated in the LMSTn register before writing another value.

OM0 bit (LIN reset bit)
The OM0 bit selects either causing a transition to LIN reset mode or canceling LIN reset mode.
With 0 set, LIN reset mode is caused.
With 1 set, LIN reset mode is canceled.

OM1 bit (LIN mode select bit)
The OM1 bit selects the specific operation mode (either LIN wake-up mode or LIN operation mode) after canceling LIN reset mode.
With 0 set, LIN wake-up mode is caused.
With 1 set, LIN operation mode is caused.
This register is valid only when the OMM0 bit in the LMSTn register is 1.
Writing a value to this bit is disabled while the FTS bit in the LTRCn register is 1.

(16) LIN/UART Transmission Control Register (LTRCn)

Address: F06D0H

	7	6	5	4	3	2	1	0
	—	—	—	—	—	LNRR	RTS	FTS
Value after reset:	0	0	0	0	0	0	0	0

Bit	Symbol	Bit Name	Function	R/W
0	FTS	LIN Communication Start	0: Header reception or wake-up transmission/reception is stopped. 1: Header reception or wake-up transmission/reception is started.	R/W
1	RTS	Response Transmission/Reception Start	0: Response transmission/reception is stopped. 1: Response transmission/reception is started.	R/W
2	LNRR	No-Response Request	0: Response to the reception ID is received/transmitted. 1: Response to the reception ID is not received/transmitted.	R/W
7 to 3	—	Reserved	These bits are always read as 0. The write value should always be 0.	R/W

FTS bit (LIN communication start bit)

Set the FTS bit to 1 to start header or wake-up reception (counting of the low width of the input signal).
Also set this bit to 1 to allow wake-up transmission.
Only 1 can be written to this bit; 0 cannot be written.
Writing a value to this bit is disabled when the OMM0 bit in the LMSTn register is 0 (LIN reset mode).
This bit is set to 0 upon completion of wake-up transmission/reception and transition to LIN reset mode.

RTS bit (response transmission/reception start bit)

Set the RTS bit to 1 when response transmission/reception is started after the header is received and the received ID is checked. Once set, this bit is automatically cleared to 0 upon completion of response communication or transition to LIN reset mode.
Only 1 can be written to this bit; 0 cannot be written.
To write 1 to this bit, write 02H to the LTRCn register by using an 8-bit data transfer instruction.
Do not set this bit and the LNRR bit to 1 simultaneously.
Writing a value to this bit is disabled when the OMM0 bit in the LMSTn register is 0 (LIN reset mode).
Writing a value to this bit is disabled when the FTS bit is 0 (header reception or wake-up transmission/reception is stopped).

When response data of 9 bytes or more is to be transmitted or received, set this bit to 1 each time a data group (variable from 0 to 8 bytes) is transmitted or received. Once set, this bit is automatically cleared to 0 upon completion of data group transmission/reception or transition to LIN reset mode.

LNRR bit (no-response request bit)

Set the LNRR bit to 1 when neither response transmission nor reception is started after the header is received and the received ID is checked.
Once set, this bit is automatically cleared to 0 upon detection of the new sync field or transition to LIN reset mode.

Only 1 can be written to this bit; 0 cannot be written.
To write 1 to this bit, write 04H to the LTRCn register by using an 8-bit data transfer instruction.
Do not set this bit and the RTS bit to 1 simultaneously.
Writing a value to this bit is disabled when the OMM0 bit in the LMSTn register is 0 (LIN reset mode).
Writing a value to this bit is disabled when the FTS bit is 0 (header reception or wake-up transmission/reception is stopped).
When a 9-byte or longer response is to be transmitted or received, do not use this bit other than on completion of header reception (do not use this bit on completion of the second and subsequent data groups).

(17) LIN/UART Mode Status Register (LMSTn)

Address: F06D1H

	7	6	5	4	3	2	1	0
	—	—	—	—	—	—	OMM1	OMM0
Value after reset:	0	0	0	0	0	0	0	0

Bit	Symbol	Bit Name	Function	R/W
0	OMM0	LIN Reset Status Monitor	0: The module is in LIN reset mode. 1: The module is not in LIN reset mode.	R
1	OMM1	LIN Mode Status Monitor	0: The module is in LIN wake-up mode. 1: The module is in LIN operation mode.	R
7 to 2	—	Reserved	These bits are always read as 0. The write value should always be 0.	R/W

OMM0 bit (LIN reset status monitor)

OMM1 bit (LIN mode status monitor)

The OMM0 and OMM1 bits indicate the current operation mode.

(18) LIN/UART Status Register (LSTn)

Address: F06D2H

	7	6	5	4	3	2	1	0
	HTRC	D1RC	—	—	ERR	—	FRC	FTC
Value after reset:	0	0	0	0	0	0	0	0

Bit	Symbol	Bit Name	Function	R/W
0	FTC	Successful Frame/Wake-up Transmission Flag	0: Response or wake-up transmission has not been completed. 1: Response or wake-up transmission has been completed.	R/W
1	FRC	Successful Frame/Wake-up Reception Flag	0: Response or wake-up reception has not been completed. 1: Response or wake-up reception has been completed.	R/W
2	—	Reserved	This bit is always read as 0. The write value should always be 0.	R/W
3	ERR	Error Detection Flag	0: No error has been detected. 1: Error has been detected.	R
4, 5	—	Reserved	These bits are always read as 0. The write value should always be 0.	R/W
6	D1RC	Successful Data 1 Reception Flag	0: Data 1 reception has not been completed. 1: Data 1 reception has been completed.	R/W
7	HTRC	Successful Header Reception Flag	0: Header reception has not been completed. 1: Header reception has been completed.	R/W

The LSTn register is automatically cleared to 00H upon transition to LIN reset mode.
In LIN reset mode, writing to this register is disabled. In LIN reset mode, the register retains 00H.
To clear the specific bits in the register, write 0 to the bits to be cleared and write 1 to the other bits by using an 8-bit data transfer instruction.

FTC flag (successful frame/wake-up transmission flag)
Only 0 can be written to the FTC flag; when 1 is written, the bit retains the value that has been retained before 1 is written. The FTC flag is set to 1 upon completion of response or wake-up transmission. Here, an interrupt is generated if the FTCIE bit in the LIEn register is 1 (interrupt is enabled). Note that when the response or wake-up transmission is completed with the FTC flag set to 1, an interrupt is not generated. To clear the bit to 0, write 0 to the bit.

When response data of 9 bytes or more is to be transmitted, this bit is set to 1 each time a data group (variable from 0 to 8 bytes) is transmitted. Write 0 before starting transmission of the next data group.

FRC flag (successful frame/wake-up reception flag)
Only 0 can be written to the FRC flag; when 1 is written, the bit retains the value that has been retained before 1 is written. The FRC flag is set to 1 upon completion of response or wake-up reception. Here, an interrupt is generated if the FRCIE bit in the LIEn register is 1 (interrupt is enabled). Note that when the response or wake-up reception is completed with the FRC flag set to 1, an interrupt is not generated. To clear the bit to 0, write 0 to the bit.

When response data of 9 bytes or more is to be received, this bit is set to 1 each time a data group (variable from 0 to 8 bytes) is received. Write 0 before starting reception of the next data group.

ERR flag (error detection flag)
The ERR flag is set to 1 upon detection of an error (any of the LESTn register flags is 1). Here, an interrupt is generated if the ERRIE bit in the LIEn register is 1 (interrupt is enabled). Note that when an error is detected with the ERR flag set to 1, an interrupt is not generated. To clear the bit to 0, write 0 to the RPER, IPER ,CSER, SFER, FER, TER, and BER flags in the LESTn register. This clears the ERR flag to 0.

D1RC flag (successful data 1 reception flag)
Only 0 can be written to the D1RC flag; when 1 is written, the bit retains the value that has been retained before 1 is written. The D1RC flag is set to 1 upon completion of data 1 reception. Here, an interrupt is not generated. To clear the bit to 0, write 0 to the bit.

When response data of 9 bytes or more is to be received, this bit is set to 1 each time data 1 of a data group (variable from 0 to 8 bytes) is received. Write 0 before starting reception of the next data group.

HTRC flag (successful header transmission flag)
Only 0 can be written to the HTRC flag; when 1 is written, the bit retains the value that has been retained before 1 is written. The HTRC flag is set to 1 upon completion of header transmission. Here, an interrupt is generated if the SHIE bit in the LIEn register is 1 (interrupt is enabled). Note that when header reception is completed with the HTRC flag set to 1, an interrupt is not generated. To clear the bit to 0, write 0 to the bit.
After the reception of a header, clear this bit after reading it as 1 so that a new header will be detectable.

(19) LIN/UART Error Status Register (LESTn)

Address: F06D3H

	7	6	5	4	3	2	1	0
	RPER	IPER	CSER	SFER	FER	TER	—	BER
Value after reset:	0	0	0	0	0	0	0	0

Bit	Symbol	Bit Name	Function	R/W
0	BER	Bit Error Flag	0: Bit error has not been detected. 1: Bit error has been detected.	R/W
1	—	Reserved	This bit is always read as 0. The write value should always be 0.	R/W
2	TER	Timeout Error Flag	0: Frame/response timeout error has not been detected. 1: Frame/response timeout error has been detected.	R/W
3	FER	Framing Error Flag	0: Framing error has not been detected. 1: Framing error has been detected.	R/W
4	SFER	Sync Field Error Flag	0: Sync field error has not been detected. 1: Sync field error has been detected.	R/W
5	CSER	Checksum Error Flag	0: Checksum error has not been detected. 1: Checksum error has been detected.	R/W
6	IPER	ID Parity Error Flag	0: ID parity error has not been detected. 1: ID parity error has been detected.	R/W
7	RPER	Response Preparation Error Flag	0: Response preparation error has not been detected. 1: Response preparation error has been detected.	R/W

The LESTn register is automatically cleared to 00H upon transition to LIN reset mode.
In LIN reset mode, writing to this register is disabled. In LIN reset mode, the register retains 00H.
To clear the specific bits in the register, write 0 to the bits to be cleared and write 1 to the other bits by using an 8-bit data transfer instruction.

BER flag (bit error flag)
Only 0 can be written to the BER flag; when 1 is written, the bit retains the value that has been retained before 1 is written. The BER flag is set to 1 upon bit error detection if the BERE bit in the LEDEn register is 1 (bit error detection is enabled). To clear the bit to 0, write 0 to the bit.

TER flag (timeout error flag)
Only 0 can be written to the TER flag; when 1 is written, the bit retains the value that has been retained before 1 is written. The TER flag is set to 1 upon frame timeout error or response timeout error detection if the TERE bit in the LEDEn register is 1 (frame/response timeout error detection is enabled). To clear the bit to 0, write 0 to the bit.

FER flag (framing error flag)
Only 0 can be written to the FER flag; when 1 is written, the bit retains the value that has been retained before 1 is written. The FER flag is set to 1 upon framing error detection if the FERE bit in the LEDEn register is 1 (framing error detection is enabled). To clear the bit to 0, write 0 to the bit.

SFER flag (sync field error flag)
Only 0 can be written to the SFER flag; when 1 is written, the bit retains the value that has been retained before 1 is written. The SFER flag is set to 1 upon sync field error detection if the SFERE bit in the LEDEn register is 1 (sync field error detection is enabled). To clear the bit to 0, write 0 to the bit.

CSER flag (checksum error flag)
Only 0 can be written to the CSER flag; when 1 is written, the bit retains the value that has been retained before 1 is written. The CSER flag is set to 1 upon checksum error detection. To clear the bit to 0, write 0 to the bit.

IPER flag (ID parity error flag)
Only 0 can be written to the IPER flag; when 1 is written, the bit retains the value that has been retained before 1 is written. The IPER flag is set to 1 upon ID parity error detection if the IPERE bit in the LEDEn register is 1 (ID parity error detection is enabled). To clear the bit to 0, write 0 to the bit.

RPER flag (response preparation error flag)
Only 0 can be written to the RPER flag; when 1 is written, the bit retains the value that has been retained before 1 is written. The RPER flag is set to 1 upon response preparation error detection. To clear the bit to 0, write 0 to the bit.

(20) LIN/UART Data Field Configuration Register (LDFCn)

Address: F06D4H

	7	6	5	4	3	2	1	0
	LSS	—	LCS	RCDS	RFDL[3:0]			
Value after reset:	0	0	0	0	0	0	0	0

Bit	Symbol	Bit Name	Function	R/W
3 to 0	RFDL[3:0]	Response Field Length Select	b3 b0 0 0 0 0: 0 byte (+ checksum) 0 0 0 1: 1 byte (+ checksum) 0 0 1 0: 2 bytes (+ checksum) : 0 1 1 1: 7 bytes (+ checksum) 1 0 0 0: 8 bytes (+ checksum) Settings other than the above are prohibited.	R/W
4	RCDS	Response Field Communication Direction Select	0: Reception 1: Transmission	R/W
5	LCS	Checksum Select	0: Classic checksum mode 1: Enhanced checksum mode	R/W
6	—	Reserved	This bit is always read as 0. The write value should always be 0.	R/W
7	LSS	Transmission/Reception Continuation Select	0: The data group to be transmitted/received next is the last one. 1: The data group to be transmitted/received next is not the last one. (Data transmission/reception is continued without waiting for the next header reception.)	R/W

RFDL[3:0] bits (response field length select bits)
The RFDL bits set the length of the response field data.
The data length can be 0 to 8 bytes excluding the checksum size.
Set these bits when the RTS bit is 0 (response transmission/reception stopped).

When response data of 9 bytes or more is to be transmitted and received, only the last data group (the LSS bit is 0) includes the checksum, and no other groups (the LSS bit is 1) include the checksum.

RCDS bit (response field communication direction select bit)
The RCDS bit sets the direction of the response field/wake-up signal communication.
With 0 set, reception is performed in the response field. In LIN wake-up mode, wake-up reception is performed (low width of the input signal is counted).
With 1 set, transmission is performed in the response field. In LIN wake-up mode, wake-up transmission is performed.
When the module is in the LIN operating mode, set this bit while the RTS bit in the LTRCn register is 0 (response transmission/reception stopped). When the module is in the LIN wakeup mode, set this bit while the FTS bit in the LTRCn register is 0 (header reception or wake-up transmission/reception stopped).

When response data of 9 bytes or more is to be transmitted or received, do not change the RCDS bit setting after the first data group through the last data group.

LCS bit (checksum select bit)
The LCS bit sets the checksum mode.
With 0 set, classic checksum mode is selected.
With 1 set, enhanced checksum mode is selected.
When the timeout error is used (the TERE bit in the LEDEn register is 1), the specific timeout time depends on the setting of this bit. For details, refer to **17.4.6 Error Status**.
Do not set this bit to 1 (enhanced mode) when the response field is 0 bytes long (the RFDL bit is 0).

When response of 9 bytes or more is to be transmitted or received, do not change the LCS bit setting after the first data group through the last data group.
During communication of response data of 9 bytes or more, only the last data group (the LSS bit is 0) includes the checksum, and no other groups (the LSS bit is 1) include the checksum.
Set this bit while the RTS bit in the LTRCn register is 0 (response transmission/reception stopped).

LSS bit (transmission/reception continuation select bit)
The LSS bit shows that the next data group to be transmitted or received is not the last one.
With 0 set, data and checksum are transmitted or received because the next data group to be transmitted or received is the last one.
With 1 set, only data is transmitted or received, and the checksum is not included because the next data group to be transmitted or received is not the last one.

During LIN communication, do not set this bit to 1.
Set this bit while the RTS bit in the LTRCn register is 0 (response transmission/reception stopped).

(21) LIN/UART ID Buffer Register (LIDBn)

Address: F06D5H

	7	6	5	4	3	2	1	0
	IDP[1:0]		ID[5:0]					
Value after reset:	0	0	0	0	0	0	0	0

Bit	Symbol	Bit Name	Function	R/W
5 to 0	ID[5:0]	ID	Holds the 6-bit ID value received in the ID field.	R/W
7, 6	IDP[1:0]	Parity	Holds the parity bits (P) received in the ID field.	R/W

Writing to the LIDBn register is enabled upon completion of header reception.
In LIN mode (LIN operation mode or LIN wake-up mode), writing is disabled.

In LIN self-test mode, this register operates as follows:
Write the value to be transmitted before communication. The reversed value of the value received can be read from the register after frame transmission/reception is completed (after loopback).
For details of LIN self-test mode, refer to **17.6 LIN Self-Test Mode**.

ID[5:0] bits (ID bits)
The ID bits hold the 6-bit ID value received in the ID field of the LIN frame.

IDP[1:0] bits (parity bits)
The IDP bits hold the parity bits (P0 and P1) received in the ID field of the LIN frame.
The IDP0 bit is P0 and the IDP1 bit is P1.
When the IPERE bit in the LEDEn register is 1 (ID parity detection is enabled), the received value is checked against the internally pre-calculated value, and if they do not agree, the IPER bit (ID parity error flag) is set.

(22) LIN Checksum Buffer Register (LCBRn)

Address: F06D6H

	7	6	5	4	3	2	1	0
Value after reset:	0	0	0	0	0	0	0	0

Bit	Function	R/W
7 to 0	Holds the checksum value transmitted or received.	R/W

In LIN mode, this register operates as follows:

- When the RCDS bit in the LDFCn register is 1 (transmission):

  The value transmitted can be read from the register. Writing to this register is invalid.
- When the RCDS bit in the LDFCn register is 0 (reception):

  The value received can be read from the register. Writing to this register is invalid.

When response data of 9 bytes or more is to be transmitted or received, the checksum is appended only to the last data group; this register is not updated for the other data groups.

In LIN self-test mode, this register operates as follows:

- When the RCDS bit in the LDFCn register is 1 (transmission):

  The reversed value of the value received can be read from the register after frame transmission is completed (after loopback).
- When the RCDS bit in the LDFCn register is 0 (reception):

  Write the value to be received before communication. The reversed value of the value received can be read from the register after frame transmission/reception is completed (after loopback).

For details of LIN self-test mode, refer to **17.6 LIN Self-Test Mode**.

Set the LCBRn register when the FTS bit in the LTRCn register is 0 (frame transmission or wake-up transmission/reception is halted).

(23) LIN/UART Data Buffer m Register (LDBnm) (m = 1 to 8)

Address: LDBn1 F06D8H, LDBn2 F06D9H, LDBn3 F06DAH, LDBn4 F06DBH, LDBn5 F06DCH, LDBn6 F06DDH, LDBn7 F06DEH, LDBn8 F06DFH

	7	6	5	4	3	2	1	0
Value after reset:	0	0	0	0	0	0	0	0

Bit	Function	Setting Range	R/W
7 to 0	Sets the data to be transmitted or allows the received data to be read.	00H to FFH	R/W

For response transmission:
These registers set the data to be transmitted in the response field.
Set these registers when the RTS bit is 0 (response reception/transmission is halted).

For response reception:
These registers hold the data received in the response field.
<R> The received data is overwritten. If an error is detected, the data up to the byte in which the error was detected are stored in the register.
Do not read these registers when the RTS bit is 1 (response transmission/reception is started)

In LIN self-test mode, this register operates as follows:
Write the value to be transmitted before communication. The reversed value of the value received can be read from the register after frame transmission/reception is completed (after loopback).
For details of LIN self-test mode, refer to **17.6 LIN Self-Test Mode**.

17.2.3 Registers for UART

(1) Input Switch Control Register (ISC)

The ISC2 and ISC3 bits in the ISC register are used in the LIN/UART module (RLIN3).
Setting bit 2 or bit 3 to 1 selects the input signal of the serial data input pin for the LIN/UART module as the external interrupt input.
This register can be set by a 1-bit or 8-bit memory manipulation instruction.
Reset signal generation sets this register to 00H.

Address: F0073H After reset: 00H R/W

Symbol	7	6	5	4	3	2	1	0
ISC	0	0	0	0	ISC3	ISC2	0	ISC0

ISC3	Switching inputs for external interrupt INTP12
0	INTP12 pin input signal is set as external interrupt input.
1	LRXD1 pin input signal is set as external interrupt input.

ISC2	Switching inputs for external interrupt INTP11
0	INTP11 pin input signal is set as external interrupt input.
1	LRXD0 pin input signal is set as external interrupt input.

ISC0	Switching inputs for external interrupt INTP0
0	INTP0 pin input signal is set as external interrupt input. (normal operation)
1	RXD0 pin input signal is set as external interrupt input. (wake-up signal detection)

Caution Bits 7 to 4 and 1 should always be set to 0.

(2) LIN Channel Select Register (LCHSEL)

Address: F007BH

	7	6	5	4	3	2	1	0
	—	—	—	—	—	—	—	LSEL0
Value after reset:	0	0	0	0	0	0	0	0

Bit	Symbol	Bit Name	Function	R/W
0	LSEL0	LIN Channel Select	0: Selects LIN0. (LIN0 registers can be accessed.) 1: Selects LIN1. (LIN1 registers can be accessed.)	R/W
7 to 1	—	Reserved	These bits are always read as 0. The write value should always be 0.	R/W

LSEL0 bit (LIN channel select bit)

Since the LIN/UART module registers are not directly mapped on the CPU memory map, they should be accessed via the register windows. The register windows are mapped on addresses F06C1H to F06E9H.
Setting a value to the LSEL0 bit maps all the registers of the corresponding channel on the register window.
Setting the LSEL0 bit to 0 maps the LIN0 registers.
Setting the LSEL0 bit to 1 maps the LIN1 registers.

With the product incorporating one channel, set the LSEL0 bit to 0.
With the product incorporating two channels, set the LSEL0 bit to the applicable value before accessing a register of the channel to use.

(3) Peripheral Enable Register 2 (PER2)

The PER2 register is used to enable or disable supplying the clock to the peripheral hardware. Clock supply to the hardware that is not used is also stopped so as to decrease the power consumption and noise.

To use the peripheral functions which are controlled by this register, set (1) the bit corresponding to each function before specifying the initial settings of the peripheral functions.

This register can be set by a 1-bit or 8-bit memory manipulation instruction.

Reset signal generation sets this register to 00H.

Address: F02C1H After reset: 00H R/W

Symbol	7	6	5	4	<3>	<2>	1	<0>
PER2	0	0	0	0	LIN1EN Note 1	LIN0EN	0	CAN0EN Note 2

LIN1EN Note 1	Control of LIN1 input clock supply
0	Stops input clock supply. • Disables writing to the SFR used by LIN1. • LIN1 is in the reset state.
1	Enables input clock supply. • Enables reading from and writing to the SFR used by LIN1.

LIN0EN	Control of LIN0 input clock supply
0	Stops input clock supply. • Disables writing to the SFR used by LIN0. • LIN0 is in the reset state.
1	Enables input clock supply. • Enables reading from and writing to the SFR used by LIN0.

CAN0EN Note 2	Control of CAN input clock supply
0	Stops input clock supply. • Disables writing to the SFR used by CAN. • CAN is in the reset state.
1	Enables input clock supply. • Enables reading from and writing to the SFR used by CAN.

Notes **1.** Only in the RL78/F14 products with at least 128 Kbytes of code flash memory and the 100-pin products of the RL78/F14.

2. Only in the RL78/F13 (CAN and LIN incorporated) and RL78/F14 products.

Caution **Be sure to clear the following bits to 0.**

Bits 0, 1, 3, 4, 5, 6, and 7 in the RL78/F13 (LIN incorporated) products

Bits 1, 3, 4, 5, 6, and 7 in the RL78/F13 (CAN and LIN incorporated) products and the RL78/F14 products with 30, 32, 48, 64, or 80 pins and up to 96 Kbytes of code flash memory

Bits 1, 4, 5, 6, and 7 in the RL78/F14 products with at least 128 Kbytes of code flash memory and the 100-pin products of the RL78/F14

(4) LIN Clock Select Register (LINCKSEL)

This register is used to control the communication clock source supplied to the LIN.

Address: F02C3H After reset: 00H R/W

Symbol	7	6	<5>	<4>	3	2	<1>	<0>
LINCKSEL	0	0	LIN1MCKE Note	LIN0MCKE	0	0	LIN1MCK Note	LIN0MCK

LIN1MCKE Note	Control of supplying or stopping LIN1 communication clock source
0	Stops LIN communication clock source supply.
1	Enables LIN communication clock source supply.

LIN0MCKE	Control of supplying or stopping LIN0 communication clock source
0	Stops LIN communication clock source supply.
1	Enables LIN engine clock supply.

LIN1MCK Note	Control of selecting LIN1 communication clock source
0	Selects the f_{CLK} clock.
1	Selects the f_{MX} clock.

LIN0MCK	Control of selecting LIN0 communication clock source
0	Selects the f_{CLK} clock.
1	Selects the f_{MX} clock.

Note Only in the RL78/F14 products with at least 48 pins and 128 Kbytes or more of code flash memory and the 100-pin products of the RL78/F14.

Cautions 1. Select the LINn operating clock with the LINnMCK bit before setting the LINnMCKE (n = 0, 1) bit to 1 (operating clock is supplied).

2. When operating LINn in SNOOZE mode, set the LINnMCK bit to 0.

3. In case of LINnMCK is set to 1, set at least 1.2 times the frequency of the LIN communication clock source to the f_{CLK} clock.

(5) External interrupt rising edge enable registers (EGP0, EGP1), external interrupt falling edge enable registers (EGN0, EGN1)

For details, see **21.3.4 External interrupt rising edge enable registers (EGP0, EGP1), external interrupt falling edge enable registers (EGN0, EGN1)**.

(6) LIN Wake-up Baud Rate Select Register (LWBRn)

Address: F06C1H

	7	6	5	4	3	2	1	0
	NSPB[3:0]				LPRS[2:0]			—
Value after reset:	0	0	0	0	0	0	0	0

Bit	Symbol	Bit Name	Function	R/W
0	—	Reserved	This bit is always read as 0. The write value should always be 0.	R/W
3 to 1	LPRS [2:0]	Prescaler Clock Select	b3 b1 0 0 0: 1/1 0 0 1: 1/2 0 1 0: 1/4 0 1 1: 1/8 1 0 0: 1/16 1 0 1: 1/32 1 1 0: 1/64 1 1 1: 1/128	R/W
7 to 4	NSPB [3:0]	Bit Sampling Count Select	b7 b4 0 0 0 0: 16 sampling 0 1 0 1: 6 sampling 0 1 1 0: 7 sampling 0 1 1 1: 8 sampling 1 0 0 0: 9 sampling 1 0 0 1: 10 sampling 1 0 1 0: 11 sampling 1 0 1 1: 12 sampling 1 1 0 0: 13 sampling 1 1 0 1: 14 sampling 1 1 1 0: 15 sampling 1 1 1 1: 16 sampling Settings other than the above are prohibited.	R/W

Set the LWBRn register when the OMM0 bit in the LMSTn register is 0 (LIN reset mode).

LPRS[2:0] bits (prescaler clock select bits)
The LPRS bits select the frequency division ratio for the prescaler.
The LIN communication clock source frequency is divided based on this prescaler.

NSPB[3:0] bits (bit sampling count select bits)
The NSPB bits select the number of sampling in one Tbit (reciprocal of the baud rate).
In UART mode (LIN/UART mode select bits in LIN/UART mode register = 01b), the NSPB bits can be set for 6 to 16 sampling.

(7) LIN/UART Baud Rate Prescaler Register (LBRPn)

Address: F06C3H, F06C2H

	LBRPn1								LBRPn0							
	15	14	13	12	11	10	9	8	7	6	5	4	3	2	1	0
Value after reset:	0	0	0	0	0	0	0	0	0	0	0	0	0	0	0	0

Bit	Function	Setting Range	R/W
15 to 0	Assuming that the value set in this register is L (0 to 65535), the baud rate prescaler divides the frequency of the prescaler clock by L + 1.	0000H to FFFFH	R/W

Set the LBRPn register when the OMM0 bit in the LMSTn register is 0 (LIN reset mode).
Assuming that the value set in this register is L, the baud rate prescaler divides the frequency of the clock that is selected by the LPRS bits in the LWBRn register (prescaler clock select bits) by L + 1.
The LBRPn register can be accessed in 8-bit units using the following registers.

- Lower 8 bits: LIN/UART baud rate prescaler 0 register (LBRPn0); address F06C2H
- Upper 8 bits: LIN/UART baud rate prescaler 1 register (LBRPn1); address F06C3H

(8) UART Standby Control Register (LUSCn)

Address: F06C5H

	7	6	5	4	3	2	1	0
	—	—	—	—	—	URDCC	USEC	UWC
Value after reset:	0	0	0	0	0	0	0	0

Bit	Symbol	Bit Name	Function	R/W
0	UWC	UART Standby Wake-up Control	0: Disables start of reception from STOP mode. 1: Enables start of reception from STOP mode.	R/W
1	USEC	UART Standby Error Control	0: Enables error detection interrupt generation. 1: Disables error detection interrupt generation.	R/W
2	URDCC	UART Standby Received data Comparison Control	0: Disables comparison of the received data and the LIDBn register value in SNOOZE mode. 1: Enables comparison of the received data and the LIDBn register value in SNOOZE mode.	R/W
7 to 3	—	Reserved	These bits are always read as 0. The write value should always be 0.	R/W

Set the LUSCn register when the OMM0 bit in the LMSTn register is 0 (LIN reset mode).

UWC bit (UART standby wake-up control bit)

The UWC bit enables or disables transition to SNOOZE mode upon detection of the falling edge on the reception pin in STOP mode.

With 0 set, detection of the falling edge on the reception pin in STOP mode does not cause a transition to SNOOZE mode thus not initiating reception.

With 1 set, detection of the falling edge on the reception pin in STOP mode causes a transition to SNOOZE mode thus initiating reception.

USEC bit (UART standby error control bit)

The USEC bit enables or disables interrupt generation upon detection of an error or change in status in SNOOZE mode.

With 0 set, if an error (framing error or parity error) or change in status (detection of the expansion bit) is detected in SNOOZE mode, the corresponding flag is set to 1 thus generating the error detection interrupt.

With 1 set, if an error (framing error or parity error) or change in status (detection of the expansion bit) is detected in SNOOZE mode, the corresponding flag is not set to 1 thus generating no error detection interrupt and the module makes a transition to STOP mode.

Do not set this bit to 1 (error detection interrupt generation is disabled) when the UWC bit is 0 (start of reception from STOP mode is disabled).

This bit is enabled when the UWC bit is set to 1 (start of reception from STOP mode is enabled).

URDCC bit (UART standby received data comparison control bit)

The URDCC bit enables or disables comparison of the data received in SNOOZE mode and the LIDBn register value.

With 0 set, the data received in SNOOZE mode is not compared with the LIDBn register value and the appropriate interrupt is generated.

With 1 set, the data received in SNOOZE mode is compared with the LIDBn register value, and if they agree, the successful reception interrupt is generated. If they do not agree, an interrupt is not generated but the module makes a transition to STOP mode.

Do not set this bit to 1 (comparison of the received data and the LIDBn register value in SNOOZE mode is enabled) when the UWC bit is 0 (start of reception from STOP mode is disabled).

When this bit should be set to 1 (comparison of the received data and the LIDBn register value in SNOOZE mode is enabled), be sure to set the bit length to 8 bits (the UBLS bit in the LBFCn register is 0; 8-bit UART communication) and set the UEBE bit in the LUORn1 register to 0; expansion bit operation is disabled).

This bit is enabled when the UWC bit is set to 1 (start of reception from STOP mode is enabled).

(9) LIN/UART Mode Register (LMDn)

Address: F06C8H

	7	6	5	4	3	2	1	0
	—	—	LRDNFS	—	—	—	LMD[1:0]	
Value after reset:	0	0	0	0	0	0	0	0

Bit	Symbol	Bit Name	Function	R/W
1, 0	LMD[1:0]	LIN/UART Mode Select	b1 b0 0 1: UART mode	R/W
4 to 2	—	Reserved	These bits are always read as 0. The write value should always be 0.	R/W
5	LRDNFS	LIN Reception Data Noise Filtering Disable	0: The noise filter is enabled. 1: The noise filter is disabled.	R/W
6	—	Reserved	This bit is always read as 0. The write value should always be 0.	R/W
7	—	Reserved	This bit is always read as 0. The write value should always be 0.	R/W

Set the LMDn register when the OMM0 bit in the LMSTn register is 0 (LIN reset mode).

LMD[1:0] bits (LIN/UART mode select bits)
The LMD bits select the LIN/UART module mode.
To use the LIN/UART module as UART, set these bits to 01b.
With 01b set, the LIN/UART module operates as UART.

LRDNFS bit (LIN reception data noise filtering disable bit)
The LRDNFS bit enables or disables the noise filter when receiving data.
With 0 set, the noise filter is enabled when receiving data.
With 1 set, the noise filter is disabled when receiving data.

(10) LIN Break Field Configuration Register/UART Configuration Register (LBFCn)

Address: F06C9H

	7	6	5	4	3	2	1	0
	—	UTPS	URPS	UPS[1:0]		USBLS	UBOS	UBLS
Value after reset:	0	0	0	0	0	0	0	0

Bit	Symbol	Bit Name	Function	R/W
0	UBLS	UART Character Length Select	0: 8-bit UART communication 1: 7-bit UART communication	R/W
1	UBOS	UART Transfer Format Select	0: LSB first 1: MSB first	R/W
2	USBLS	UART Stop Bit Length Select	0: One stop bit 1: Two stop bits	R/W
4, 3	UPS[1:0]	UART Parity Select	b4 b3 0 0: No parity 0 1: Even parity 1 0: 0-parity 1 1: Odd parity	R/W
5	URPS	UART Input Polarity Select	0: Reception data is input as is. 1: Reception data is reversed before being input.	R/W
6	UTPS	UART Output Polarity Select	0: Transmission data is output as is. 1: Transmission data is reversed before being output.	R/W
7	—	Reserved	This bit is always read as 0. The write value should always be 0.	R/W

Set the LBFCn register when the OMM0 bit in the LMSTn register is 0 (LIN reset mode).

UBLS bit (UART character length select bit)
The UBLS bit sets the length of a character of a UART communication frame.
With 0 set, a character of a frame is 8 bits long in communication.
With 1 set, a character of a frame is 7 bits long in communication.
Setting this bit is invalid when a character of a UART frame for communication is 9 bits long (the UEBE bit in the LUORn1 register is 1).

UBOS bit (UART transfer format select bit)
The UBOS bit sets the bit order of UART communication data.
With 0 set, data is transferred with the LSB first.
With 1 set, data is transferred with the MSB first.

USBLS bit (UART stop bit length select bit)
The USBLS bit sets the stop bit length in UART communication.
With 0 set, transmission is performed with 1 stop bit.
With 1 set, transmission is performed with 2 stop bits.

UPS[1:0] bit (UART parity select bit)

The UPS bits set the parity for UART communication.
With 00b set, no parity is used in communication.

- Transmission
  A parity bit is not appended to transmission data.
- Reception
  A parity bit is not appended to reception data, thus causing no parity error.

With 01b set, an even parity is used in communication.

- Transmission
  When the number of 1s in transmission data is odd, 1 is appended as the parity bit, whereas when the number of 1s in the transmission data is even, 0 is appended as the parity bit.
- Reception
  When the number of 1s in the received data including the parity bit is odd, the parity error occurs.

With 10b set, 0-parity is used in communication.

- Transmission
  A 0 is appended as the parity bit irrespective of the number of 1s in the transmission data.
- Reception
  No parity error is caused since the value of the parity bit is not checked.

With 11b set, an odd parity is used in communication.

- Transmission
  When the number of 1s in transmission data is odd, 0 is appended as the parity bit, whereas when the number of 1s in the transmission data is even, 1 is appended as the parity bit.
- Reception
  When the number of 1s in the received data including the parity bit is even, the parity error occurs.

URPS bit (UART input polarity select bit)

The URPS bit sets the input polarity in UART communication.
With 0 set, the reception data is input as is.
With 1 set, the reception data is reversed before being input.
The setting of this bit applies to all the bits for the UART frames.
In half-duplex communication, set this bit and the UTPS bit to the same value.

UTPS bit (UART output polarity select bit)

The UTPS bit sets the output polarity in UART communication.
With 0 set, the transmission data is output as is.
With 1 set, the transmission data is reversed before being output.
The setting of this bit applies to all the bits for the UART frames.
In half-duplex communication, set this bit and the URPS bit to the same value.

(11) LIN/UART Space Configuration Register (LSCn)

Address: F06CAH

	7	6	5	4	3	2	1	0
	—	—	IBS[1:0]		—	—	—	—
Value after reset:	0	0	0	0	0	0	0	0

Bit	Symbol	Bit Name	Function	R/W
2 to 0	—	Reserved	These bits are always read as 0. The write value should always be 0.	R/W
3	—	Reserved	This bit is always read as 0. The write value should always be 0.	R/W
5, 4	IBS[1:0]	Inter-Byte Space Select	b5 b4 0 0: 0 Tbit 0 1: 1 Tbit 1 0: 2 Tbits 1 1: 3 Tbits	R/W
7, 6	—	Reserved	These bits are always read as 0. The write value should always be 0.	R/W

Set the LSCn register when the OMM0 bit in the LMSTn register is 0 (LIN reset mode).

IBS[1:0] bits (Inter-byte space select bits)
The IBS bits set the width of the space between UART frames in transmission using UART buffer.
0 Tbit to 3 Tbits can be set.
When transmitting from the transmission buffer(LUTDRn register) and the wait transmission buffer(LUWTDRn register),set 00b to the IBS[1:0] bit.

(12) LIN/UART Error Detection Enable Register (LEDEn)

Address: F06CDH

	7	6	5	4	3	2	1	0
	—	—	—	—	FERE	OERE	—	BERE
Value after reset:	0	0	0	0	0	0	0	0

Bit	Symbol	Bit Name	Function	R/W
0	BERE	Bit Error Detection Enable	0: Disables bit error detection. 1: Enables bit error detection.	R/W
1	—	Reserved	This bit is always read as 0. The write value should always be 0.	R/W
2	OERE	Overrun Error Detection Enable	0: Disables overrun error detection. 1: Enables overrun error detection.	R/W
3	FERE	Framing Error Detection Enable	0: Disables framing error detection. 1: Enables framing error detection.	R/W
4	—	Reserved	This bit is always read as 0. The write value should always be 0.	R/W
5	—	Reserved	This bit is always read as 0. The write value should always be 0.	R/W
6	—	Reserved	This bit is always read as 0. The write value should always be 0.	R/W
7	—	Reserved	This bit is always read as 0. The write value should always be 0.	R/W

Set the LEDEn register when the OMM0 bit in the LMSTn register is 0 (LIN reset mode).

BERE bit (bit error detection enable bit)
The BERE bit enables or disables detection of the bit error.
With 0 set, the bit error is not detected.
With 1 set, the bit error is detected.
When this bit is set to 1, the detection result is indicated in the BER flag in the LESTn register.
Do not set this bit to 1 when the LIN/UART module is used in full-duplex mode.
For details of the bit error, refer to **17.5.5 Error Status**.
Do not set this bit when the NSPB bits in the LWBRn register are 0101b (6 sampling) and the LRDNFS bit in the LMDn register is 0 (the noise filter is in use).

OERE bit (overrun error detection enable bit)
The OERE bit enables or disables detection of the overrun error.
With 0 set, the overrun error is not detected.
With 1 set, the overrun error is detected.
When this bit is set to 1, the detection result is indicated in the OER flag in the LESTn register.
For details of the overrun error, refer to **17.5.5 Error Status**.

FERE bit (framing error detection enable bit)
The FERE bit enables or disables detection of the framing error.
With 0 set, the framing error is not detected.
With 1 set, the framing error is detected.
When this bit is set to 1, the detection result is indicated in the FER flag in the LESTn register.
For details of the framing error, refer to **17.5.5 Error Status**.

(13) LIN/UART Control Register (LCUCn)

Address: F06CEH

	7	6	5	4	3	2	1	0
	—	—	—	—	—	—	—	OM0
Value after reset:	0	0	0	0	0	0	0	0

Bit	Symbol	Bit Name	Function	R/W
0	OM0	LIN Reset	0: LIN reset mode is caused. 1: LIN reset mode is canceled.	R/W
1	—	Reserved	This bit is always read as 0. The write value should always be 0.	R/W
7 to 2	—	Reserved	These bits are always read as 0. The write value should always be 0.	R/W

After a value is written to this register, confirm that the value written is actually indicated in the LMSTn register before writing another value.

OM0 bit (LIN reset bit)
The OM0 bit selects either causing a transition to LIN reset mode or canceling LIN reset mode.
With 0 set, LIN reset mode is caused.
With 1 set, LIN reset mode is canceled.

(14) LIN/UART Transmission Control Register (LTRCn)

Address: F06D0H

	7	6	5	4	3	2	1	0
	—	—	—	—	—	—	RTS	—
Value after reset:	0	0	0	0	0	0	0	0

Bit	Symbol	Bit Name	Function	R/W
0	—	Reserved	This bit is always read as 0. The write value should always be 0.	R/W
1	RTS	UART Buffer Transmission Start	0: UART buffer transmission is disabled. 1: UART buffer transmission is enabled.	R/W
2	—	Reserved	This bit is always read as 0. The write value should always be 0.	R/W
7 to 3	—	Reserved	These bits are always read as 0. The write value should always be 0.	R/W

RTS bit (UART buffer transmission start bit)

Set the RTS bit to 1 to transmit data from UART buffer.
Only 1 can be written to this bit; 0 cannot be written.
Write a value to this bit when the UTOE bit in the LUOERn register is 1 (transmission is enabled) and the UTS bit in the LSTn register is 0 (transmission not in progress).
Once set, whether or not an error has occurred, this bit is automatically cleared to 0 upon completion of transmission of the amount of data corresponding to the setting for the number of data units (by the MDL bits in the LDFCn register).
This bit is automatically cleared to 0 upon transition to LIN reset mode.

Writing a value to this bit is disabled when the OMM0 bit in the LMSTn register is 0 (LIN reset mode).
When 1 is to be written to this bit while the setting of the UTSW bit in the LDFCn register is 1 (requesting transmission from the UART buffer after the completion of waiting for stop bit reception), only do so after the reception of a stop bit.

(15) LIN/UART Mode Status Register (LMSTn)

Address: F06D1H

	7	6	5	4	3	2	1	0
	—	—	—	—	—	—	—	OMM0
Value after reset:	0	0	0	0	0	0	0	0

Bit	Symbol	Bit Name	Function	R/W
0	OMM0	LIN Reset Status Monitor	0: The module is in LIN reset mode. 1: The module is not in LIN reset mode.	R
1	—	Reserved	This bit is always read as 0. The write value should always be 0.	R
7 to 2	—	Reserved	These bits are always read as 0. The write value should always be 0.	R/W

OMM0 bit (LIN reset status monitor bit)

The OMM0 bit indicates whether or not the LIN reset mode is currently set.
With 0 set, the LIN/UART module is in LIN reset mode.
With 1 set, the LIN/UART module is not in LIN reset mode.

(16) LIN/UART Status Register (LSTn)

Address: F06D2H

	7	6	5	4	3	2	1	0
	—	—	URS	UTS	ERR	—	—	FTC
Value after reset:	0	0	0	0	0	0	0	0

Bit	Symbol	Bit Name	Function	R/W
0	FTC	Successful Buffer Transmission Flag	0: Data transmission from the UART buffer has not been completed. 1: Data transmission from the UART buffer has been completed.	R/W
1	—	Reserved	This bit is always read as 0. The write value should always be 0.	R/W
2	—	Reserved	This bit is always read as 0. The write value should always be 0.	R/W
3	ERR	Error Detection Flag	0: No error has been detected. 1: Error has been detected.	R
4	UTS	Transmission Status Flag	0: The LIN/UART module is not transmitting data. 1: The LIN/UART module is transmitting data.	R
5	URS	Reception Status Flag	0: The LIN/UART module is not receiving data. 1: The LIN/UART module is receiving data.	R
7, 6	—	Reserved	These bits are always read as 0. The write value should always be 0.	R/W

The LSTn register is automatically cleared to 00H upon transition to LIN reset mode.
In LIN reset mode, writing to this register is disabled. In LIN reset mode, the register retains 00H.
To clear the specific bits in the register, write 0 to the bits to be cleared and write 1 to the other bits by using an 8-bit data transfer instruction.

FTC flag (successful buffer transmission flag)
Only 0 can be written to the FTC flag; when 1 is written, the bit retains the value that has been retained before 1 is written.
Whether or not an error has occurred, this bit is set to 1 upon completion of transmission of data, which is equal to the number of data units set with the MDL bits in the LDFCn register, from UART buffer. Here, an interrupt is generated.
To clear the bit to 0, write 0 to the bit.

ERR flag (error detection flag)
The ERR flag is set to 1 upon detection of an error (any of the LESTn register flags is 1). Here, an interrupt is generated.
Note that when an error, the expansion bit, or ID match is detected with the ERR flag set to 1, an interrupt is not generated.
To clear the bit to 0, write 0 to the UPER, IDMT, EXBT, FER, OER, and BER flags in the LESTn register. This clears the ERR flag to 0.

UTS flag (transmission status flag)
The UTS flag is set to 1 upon start of transmission. During transmission, the flag retains 1.
Transmission is started when:

- transmission data is set in the LUTDRn or LUWTDRn register.
- 1 is set in the RTS bit in the LTRCn register.

The UTS flag is cleared to 0 upon end of transmission. While transmission is halted, the flag retains 0.
Transmission is ended when:

- transmission of the data set in the LUTDRn or LUWTDRn register is completed and the next transmission data is not set.
- data transmission from the UART buffer is completed (the RTS bit in the LTRCn register is set to 0).

URS flag (reception status flag)

The URS flag is set to 1 upon start of reception. During reception, the flag retains 1.

Reception is started when:

- the start bit is detected.

The URS flag is cleared to 0 upon end of reception. While reception is halted, the flag retains 0.

Reception is ended when:

- the first stop bit is sampled.

(17) LIN/UART Error Status Register (LESTn)

Address: F06D3H

	7	6	5	4	3	2	1	0
	—	UPER	IDMT	EXBT	FER	OER	—	BER
Value after reset:	0	0	0	0	0	0	0	0

Bit	Symbol	Bit Name	Function	R/W
0	BER	Bit Error Flag	0: Bit error has not been detected. 1: Bit error has been detected.	R/W
1	—	Reserved	This bit is always read as 0. The write value should always be 0.	R/W
2	OER	Overrun Error Flag	0: Overrun error has not been detected. 1: Overrun error has been detected.	R/W
3	FER	Framing Error Flag	0: Framing error has not been detected. 1: Framing error has been detected.	R/W
4	EXBT	Expansion Bit Detection Flag	0: Expansion bit has not been detected. 1: Expansion bit has been detected.	R/W
5	IDMT	ID match flag	0: Received data does not agree with the ID value. 1: Received data agrees with the ID value.	R/W
6	UPER	Parity Error Flag	0: Parity error has not been detected. 1: Parity error has been detected.	R/W
7	—	Reserved	This bit is always read as 0. The write value should always be 0.	R/W

The LESTn register is automatically cleared to 00H upon transition to LIN reset mode.
In LIN reset mode, writing to this register is disabled. In LIN reset mode, the register retains 00H.
To clear the specific bits in the register, write 0 to the bits to be cleared and write 1 to the other bits by using an 8-bit data transfer instruction.

BER flag (bit error flag)
Only 0 can be written to the BER flag; when 1 is written, the bit retains the value that has been retained before 1 is written.
The BER flag is set to 1 upon bit error detection if the BERE bit in the LEDEn register is 1 (bit error detection is enabled). To clear the bit to 0, write 0 to the bit.

OER flag (overrun error flag)
Only 0 can be written to the OER flag; when 1 is written, the bit retains the value that has been retained before 1 is written.
The OER flag is set to 1 upon overrun error detection if the OERE bit in the LEDEn register is 1 (overrun error detection is enabled). To clear the bit to 0, write 0 to the bit.

FER flag (framing error flag)
Only 0 can be written to the FER flag; when 1 is written, the bit retains the value that has been retained before 1 is written.
The FER flag is set to 1 upon framing error detection if the FERE bit in the LEDEn register is 1 (framing error detection is enabled).
In SNOOZE mode, the following conditions should also be satisfied to set this flag to 1.

- The UWC bit in the LUSCn register is 1 (start of reception from STOP mode is enabled).
- The USEC bit in the LUSCn register is 0 (error detection interrupt generation is enabled).

To clear the bit to 0, write 0 to the bit.

EXBT flag (expansion bit detection flag)

Only 0 can be written to the EXBT flag; when 1 is written, the bit retains the value that has been retained before 1 is written. This flag is set to 1 when the UEBE bit in the LUORn1 register is 1 (expansion bit operation is enabled) and the received expansion bit agrees with the UEBDL bit value in the LUORn1 register.

In SNOOZE mode, the following conditions should also be satisfied to set this flag to 1.

- The UWC bit in the LUSCn register is 1 (start of reception from STOP mode is enabled).
- The USEC bit in the LUSCn register is 0 (error detection interrupt generation is enabled).
- The UECD bit in the LUORn1 register is 0 (comparison of the expansion bit is enabled).

To clear the bit to 0, write 0 to the bit.

IDMT flag (ID match flag)

Only 0 can be written to the IDMT flag; when 1 is written, the bit retains the value that has been retained before 1 is written. The IDMT flag is set to 1 when all the following conditions are satisfied.

- The UEBE bit in the LUORn1 register is 1 (expansion bit operation is enabled).
- The UECD bit in the LUORn1 register is 0 (expansion bit comparison is enabled).
- The UEBDCE bit in the LUORn1 register is 1 (data comparison after expansion bit detection is enabled).
- The received expansion bit agrees with the value of the UEBDL bit in the LUORn1 register.
- The 8-bit received data excluding the expansion bits agrees with the LIDBn register value.

To clear the bit to 0, write 0 to the bit.

UPER flag (parity error flag)

Only 0 can be written to the IDMT flag; when 1 is written, the bit retains the value that has been retained before 1 is written. The UPER flag is set to 1 upon parity error detection.

In SNOOZE mode, the following conditions should also be satisfied to set this flag to 1.

- The UWC bit in the LUSCn register is 1 (start of reception from STOP mode is enabled).
- The USEC bit in the LUSCn register is 0 (error detection interrupt generation is enabled).

To clear the bit to 0, write 0 to the bit.

(18) LIN/UART Data Field Configuration Register (LDFCn)

Address: F06D4H

	7	6	5	4	3	2	1	0
	—	—	UTSW	—	MDL[3:0]			
Value after reset:	0	0	0	0	0	0	0	0

Bit	Symbol	Bit Name	Function	R/W
3 to 0	MDL[3:0]	UART Buffer Data Length Select	b3 b0 0 0 0 0: 9 data 0 0 0 1: 1 data 0 0 1 0: 2 data 0 0 1 1: 3 data 0 1 0 0: 4 data 0 1 0 1: 5 data 0 1 1 0: 6 data 0 1 1 1: 7 data 1 0 0 0: 8 data 1 0 0 1: 9 data Settings other than the above are prohibited.	R/W
4	—	Reserved	This bit is always read as 0. The write value should always be 0.	R/W
5	UTSW	Transmission Start Wait	0: When UART buffer transmission is requested, transmission is started immediately. 1: When UART buffer transmission is requested, transmission is started after waiting for stop bit reception to be completed.	R/W
7, 6	—	Reserved	These bits are always read as 0. The write value should always be 0.	R/W

MDL[3:0] bits (UART buffer data length select bits)
The MDL bits set the data length of the UART buffer.
Writing a value to these bits is disabled when the RTS bit is 1 (UART buffer transmission is enabled).

UTSW bit (transmission start wait bit)
The UTSW bit controls the start timing of UART buffer transmission.
With 0 set, when UART buffer transmission is requested, transmission is started immediately.
With 1 set, when UART buffer transmission is requested, transmission is started after waiting for reception of the stop bit to be completed.
Note that the wait time is only 1 bit even if the stop bit length is set to 2 bits with the USBLS bit in the LBFCn register.
This bit is enabled when 1 is set to the RTS bit in the LTRCn register.
Writing a value to this bit is disabled when the RTS bit is 1 (UART buffer transmission is enabled).
Do not set this bit to 1 for the purpose other than switching from reception to transmission in half-duplex communication.

(19) LIN/UART ID Buffer Register (LIDBn)

Address: F06D5H

	7	6	5	4	3	2	1	0
Value after reset:	0	0	0	0	0	0	0	0

Bit	Function	R/W
7 to 0	Sets the ID value to be referenced for expansion bit/data comparison or data comparison in SNOOZE mode.	R/W

When the UEBE bit is 1 (expansion bit operation is enabled) and the UEBDCE bit is 1 (data comparison after expansion bit detection is enabled) in the LUORn1 register, set the value to be compared with the received data to the LIDBn register.
When the UWC bit is 1 (start of reception from STOP mode is enabled) and the URDCC bit is 1 (comparison of the received data and the LIDBn register value is enabled in SNOOZE mode) in the LUSCn register, set the value to be compared with the received data to the LIDBn register.

Set the LIDBn register when the URS bit in the LSTn register is 0 (reception not in progress).

(20) UART Data Buffer 0 Register (LUDBn0)

Address: F06D7H

	7	6	5	4	3	2	1	0
Value after reset:	0	0	0	0	0	0	0	0

Bit	Function	Setting Range	R/W
7 to 0	Sets the data to be transmitted from the UART buffer.	00H to FFH	R/W

The LUDBn0 register sets the data to be first transmitted from the UART buffer for nine-data-long transmission (the MDL bits in the LDFCn register is 0H or 9H).

Write to the LUDBn0 register while the RTS bit is 0 (UART buffer transmission is disabled).

For details of the UART buffer, refer to **17.5,3 Buffer Processing of Transmission Data**.

(21) LIN/UART Data Buffer m Register (LDBnm) (m = 1 to 8)

Address: LDBn1 F06D8H, LDBn2 F06D9H, LDBn3 F06DAH, LDBn4 F06DBH, LDBn5 F06DCH, LDBn6 F06DDH, LDBn7 F06DEH, LDBn8 F06DFH

	7	6	5	4	3	2	1	0
Value after reset:	0	0	0	0	0	0	0	0

Bit	Function	Setting Range	R/W
7 to 0	Sets the data to be transmitted from the UART buffer.	00H to FFH	R/W

These registers set the data to be transmitted from the UART buffer.
Write to these registers while the RTS bit is 0 (UART buffer transmission is disabled).

For details of the UART buffer, refer to **17.5,3 Buffer Processing of Transmission Data**.

(22) UART Operation Enable Register (LUOERn)

Address: F06E0H

	7	6	5	4	3	2	1	0
	—	—	—	—	—	—	UROE	UTOE
Value after reset:	0	0	0	0	0	0	0	0

Bit	Symbol	Bit Name	Function	R/W
0	UTOE	Transmission Enable	0: Disables transmission. 1: Enables transmission.	R/W
1	UROE	Reception Enable	0: Disables reception. 1: Enables reception.	R/W
7 to 2	—	Reserved	These bits are always read as 0. The write value should always be 0.	R/W

The LUOERn register is automatically cleared to 00H upon transition to LIN reset mode.
In LIN reset mode, writing to this register is disabled. In LIN reset mode, the register retains 00H.

UTOE bit (transmission enable bit)
The UTOE bit enables or disables transmission.
With 0 set, transmission is disabled.
With 1 set, transmission is enabled.
Do not clear this bit during transmission. To cancel transfer while transmission is in progress, place the module in the LIN reset mode by setting the OM0 bit in the LCUCn register to 0 (LIN reset mode). Note that this operation also cancels reception.

UROE bit (reception enable bit)
The UROE bit enables or disables reception.
With 0 set, reception is disabled.
With 1 set, reception is enabled.
Do not clear this bit during reception. To cancel transfer while reception is in progress, place the module in the LIN reset mode by setting the OM0 bit in the LCUCn register to 0 (LIN reset mode). Note that this operation also cancels transmission.
This bit must be 0 during transmitting data from UART buffer.

(23) UART Option Register 1 (LUORn1)

Address: F06E1H

	7	6	5	4	3	2	1	0
	—	—	—	UECD	UTIGTS	UEBDCE	UEBDL	UEBE
Value after reset:	0	0	0	0	0	0	0	0

Bit	Symbol	Bit Name	Function	R/W
0	UEBE	Expansion Bit Enable	0: Disables expansion bit operation. 1: Enables expansion bit operation.	R/W
1	UEBDL	Expansion Bit Detection Level Select	0: Selects expansion bit value 0 as the expansion bit detection level. 1: Selects expansion bit value 1 as the expansion bit detection level.	R/W
2	UEBDCE	Expansion Bit/Data Comparison Enable	0: Disables data comparison after detection of the expansion bit. 1: Enables data comparison after detection of the expansion bit.	R/W
3	UTIGTS	Transmission Interrupt Generation Timing Select	0: Transmission interrupt is generated at the start of transmission. 1: Transmission interrupt is generated at the completion of transmission.	R/W
4	UECD	Expansion Bit Comparison Disable	0: Enables comparison between the received expansion bit and the UEBDL bit value. 1: Disables comparison between the received expansion bit and the UEBDL bit value.	R/W
7 to 5	—	Reserved	These bits are always read as 0. The write value should always be 0.	R/W

UEBE bit (expansion bit enable bit)
The UEBE bit enables or disables expansion bit operation.
With 0 set, expansion bit operation is disabled.
With 1 set, expansion bit operation is enabled.
Set this bit when the OMM0 bit in the LMSTn register is 0 (LIN reset mode).
Do not set this bit to 1 when the UART buffer is in use.

UEBDL bit (expansion bit detection level select bit)
The UEBDL bit sets the level to be detected as the expansion bit when the UEBE bit is 1 (expansion bit operation is enabled) and the UECD bit is 0 (comparison of the expansion bit is enabled).
With 0 set, expansion bit value 0 is the level to be detected as the expansion bit.
With 1 set, expansion bit value 1 is the level to be detected as the expansion bit.
Set this bit when the OMM0 bit in the LMSTn register is 0 (LIN reset mode).
Do not set this bit to 1 when the UART buffer is in use.

UEBDCE bit (expansion bit/data comparison enable bit)

The UEBDCE bit enables or disables comparison between the 8-bit received data excluding the expansion bits and the value of LIDBn register after detection of the expansion bit.
With 0 set, comparison between the received data in the LURDRn register and the LIDBn register value is disabled after detection of the expansion bit value selected by the UEBDL bit as the expansion bit.
With 1 set, comparison between the received data in the LURDRn register and the LIDBn register value is enabled after detection of the expansion bit value selected by the UEBDL bit as the expansion bit.
Set this bit when the OMM0 bit in the LMSTn register is 0 (LIN reset mode).
Do not set this bit to 1 with the UEBE bit set to 0 (expansion bit operation disabled).
Do not set this bit to 1 with the UECD bit set to 1 (expansion bit comparison disabled).
Do not set this bit to 1 when the UART buffer is in use.
Do not set this bit to 1 with the UWC bit in the LUSCn register set to 1 (start of reception from STOP mode enabled).

UTIGTS bit (transmission interrupt generation timing select bit)

The UTIGTS bit sets the generation timing of the transmission interrupt.
With 0 set, the transmission interrupt is generated at the start of transmission.
With 1 set, the transmission interrupt is generated at the completion of transmission.
When transmission from the UART buffer is performed with 0 set, the transmission interrupt is generated only at the start of the transmission of the last data of the data length set with the MDL bits in the LDFCn register.
When transmission from the UART buffer is performed with 1 set, the transmission interrupt is generated only at the completion of the transmission of the last data of the data length set with the MDL bits in the LDFCn register.

UECD bit (expansion bit comparison disable bit)

The UECD bit enables or disables comparison between the received expansion bit and the UEBDL bit value when the UEBE bit is 1 (expansion bit operation is enabled).
With 0 set, comparison between the received expansion bit and the UEBDL bit value is enabled when the expansion bit is received.
With 1 set, comparison between the received expansion bit and the UEBDL bit value is disabled when the expansion bit is received.
Set this bit when the OMM0 bit in the LMSTn register is 0 (LIN reset mode).
Do not set this bit to 1 when the UART buffer is in use.
Do not set this bit to 1 with the UEBDCE bit set to 1 (data comparison after expansion bit detection is enabled).

(24) UART Transmission Data Register (LUTDRn)

Address: F06E5H, F06E4H

	15	14	13	12	11	10	9	8	7	6	5	4	3	2	1	0
	—	—	—	—	—	—	—	[8:0]								
Value after reset:	0	0	0	0	0	0	0	0	0	0	0	0	0	0	0	0

Bit	Function	Setting Range	R/W
8 to 0	Sets the data to be transmitted from the transmission buffer.	000H to 1FFH	R/W
15 to 9	Reserved. These bits are always read as 0. The write value should always be 0.	—	R/W

<R> The LUTDRn register sets the data to be transmitted to the UART transmission data register.
Writing data to this register with the UTOE bit in the LUOERn register set to 1 starts transmission.
This register can be accessed in 8 bits.
In 9-bit communication mode, do not attempt 8-bit access.
Do not write data to this register when data transmission from the UART buffer is in progress.
Also, do not write data to this register when a transmission request is being generated due to write access to the LUWTDRn register.
When transmitting multiple sets of data continuously, do not write another data item to this register before a transmission interrupt is generated.

The table below shows the bit arrangement according to the set transfer format.

Item	LUTDRn								
	8	7	6	5	4	3	2	1	0
7-bit; LSB first	—	—	Bit 6	Bit 5	Bit 4	Bit 3	Bit 2	Bit 1	Bit 0
7-bit; MSB first	—	—	Bit 0	Bit 1	Bit 2	Bit 3	Bit 4	Bit 5	Bit 6
8-bit; LSB first	—	Bit 7	Bit 6	Bit 5	Bit 4	Bit 3	Bit 2	Bit 1	Bit 0
8-bit; MSB first	—	Bit 0	Bit 1	Bit 2	Bit 3	Bit 4	Bit 5	Bit 6	Bit 7
9-bit; LSB first	Bit 8	Bit 7	Bit 6	Bit 5	Bit 4	Bit 3	Bit 2	Bit 1	Bit 0
9-bit; MSB first	Bit 0	Bit 1	Bit 2	Bit 3	Bit 4	Bit 5	Bit 6	Bit 7	Bit 8

(25) UART Reception Data Register (LURDRn)

Address: F06E7H, F06E6H

	15	14	13	12	11	10	9	8	7	6	5	4	3	2	1	0
	—	—	—	—	—	—	—	[8:0]								
Value after reset:	0	0	0	0	0	0	0	0	0	0	0	0	0	0	0	0

Bit	Function	Setting Range	R/W
8 to 0	Allows the reception data to be read from the reception buffer.	000H to 1FFH	R
15 to 9	Reserved. These bits are always read as 0. The write value should always be 0.	—	R/W

The LURDRn register allows the reception data to be read from the reception data register.
When the UROE bit in the LUOERn register is 1, the reception data is stored in this register and can be read out.
This register is updated at the stop bit in the reception data.
This register is also updated when an error is caused by the parity or stop bit.
This register is not updated upon occurrence of an overrun error if the OERE bit in the LEDEn register is 1 (overrun error detection is enabled). This register is updated upon occurrence of an overrun error if the OERE bit is 0 (overrun error detection is disabled).
Read this register upon occurrence of a reception error (overrun error, framing error, or parity error) if the OERE bit in the LEDEn register is 1 (overrun error detection is enabled). Reading the next data without reading this register causes an overrun error.
This register can be accessed in 8 bits. However, do not access this register in 8-bit units when the expansion bits are used (the UEBE bit in the LUORn1 register is 1 (expansion bit operation enabled)).

The table below shows the bit arrangement according to the set transfer format.

Item	LURDRn								
	8	7	6	5	4	3	2	1	0
7-bit; LSB first	—	—	Bit 6	Bit 5	Bit 4	Bit 3	Bit 2	Bit 1	Bit 0
7-bit; MSB first	—	—	Bit 0	Bit 1	Bit 2	Bit 3	Bit 4	Bit 5	Bit 6
8-bit; LSB first	—	Bit 7	Bit 6	Bit 5	Bit 4	Bit 3	Bit 2	Bit 1	Bit 0
8-bit; MSB first	—	Bit 0	Bit 1	Bit 2	Bit 3	Bit 4	Bit 5	Bit 6	Bit 7
9-bit; LSB first	Bit 8	Bit 7	Bit 6	Bit 5	Bit 4	Bit 3	Bit 2	Bit 1	Bit 0
9-bit; MSB first	Bit 0	Bit 1	Bit 2	Bit 3	Bit 4	Bit 5	Bit 6	Bit 7	Bit 8

(26) UART Wait Transmission Data Register (LUWTDRn)

Address: F06E9H, F06E8H

	15	14	13	12	11	10	9	8	7	6	5	4	3	2	1	0
	—	—	—	—	—	—	—	[8:0]								
Value after reset:	0	0	0	0	0	0	0	0	0	0	0	0	0	0	0	0

Bit	Function	Setting Range	R/W
8 to 0	Sets the data to be transmitted from the UART wait transmission data register after waiting for the stop bit reception to be completed.	000H to 1FFH	R/W
15 to 9	Reserved. These bits are always read as 0. The write value should always be 0.	—	R/W

The LUWTDRn register sets the data to be transmitted from the UART wait transmission data register.
Writing data to this register with the UTOE bit in the LUOERn register set to 1 starts transmission.
Use this register only to switch from reception to transmission in half-duplex communication.
The user should write to this register only while the stop bit is received.
Note that the wait time is only 1 bit even if the stop bit length is set to 2 bits with the USBLS bit in the LBFCn register.
When this register is read, the LUTDRn register value is actually read.
In 9-bit communication mode, do not attempt 8-bit access.
Do not write data to this register when data transmission from the UART buffer is in progress.

The table below shows the bit arrangement according to the set transfer format.

Item	LUWTDRn								
	8	7	6	5	4	3	2	1	0
7-bit; LSB first	—	—	Bit 6	Bit 5	Bit 4	Bit 3	Bit 2	Bit 1	Bit 0
7-bit; MSB first	—	—	Bit 0	Bit 1	Bit 2	Bit 3	Bit 4	Bit 5	Bit 6
8-bit; LSB first	—	Bit 7	Bit 6	Bit 5	Bit 4	Bit 3	Bit 2	Bit 1	Bit 0
8-bit; MSB first	—	Bit 0	Bit 1	Bit 2	Bit 3	Bit 4	Bit 5	Bit 6	Bit 7
9-bit; LSB first	Bit 8	Bit 7	Bit 6	Bit 5	Bit 4	Bit 3	Bit 2	Bit 1	Bit 0
9-bit; MSB first	Bit 0	Bit 1	Bit 2	Bit 3	Bit 4	Bit 5	Bit 6	Bit 7	Bit 8

17.3 Modes

The LIN/UART module provides the following four modes, depending upon the specific function to be performed:

- LIN reset mode
- LIN mode

  (LIN master mode/LIN slave mode [auto baud rate]/LIN slave mode [fixed baud rate])
- UART mode
- LIN self-test mode

The supply of clocks to the LIN/UART module is stopped in LIN reset mode, which reduces power consumption.
Figure 17-3 shows mode transitions. Table 17-4 describes mode transition conditions. Table 17-5 lists operations available in each mode.

Figure 17-3. Mode Transitions

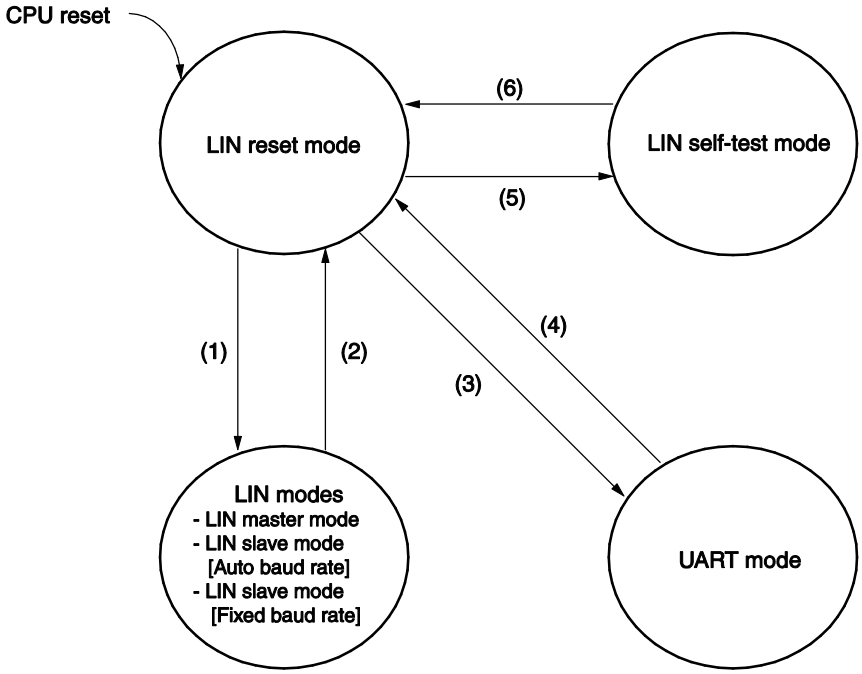

Table 17-4. Mode Transition Conditions

Step	Mode transition			Transition condition
(1)	LIN reset mode	→	LIN mode (LIN master mode)	LMD bits in LMDn register = 00b and OM1 and OM0 bits in LCUCn register = 01b or 11b
	LIN reset mode	→	LIN mode (LIN slave mode[auto baud rate])	LMD bits in LMDn register = 10b and OM1 and OM0 bits in LCUCn register = 01b or 11b
	LIN reset mode	→	LIN mode (LIN slave mode [fixed baud rate])	LMD bits in LMDn register = 11b and OM1 and OM0 bits in LCUCn register = 01b or 11b
(2)	LIN mode	→	LIN reset mode	OM0 bit in LCUCn register = 0b
(3)	LIN reset mode	→	UART mode	LMD bits in LMDn register = 01b and OM0 bit in LCUCn register = 1b
(4)	UART mode	→	LIN reset mode	OM0 bit in LCUCn register = 0b
(5)	LIN reset mode	→	LIN self-test mode	See **17.6 LIN Self-Test Mode**.
(6)	LIN self-test mode	→	LIN reset mode	See **17.6 LIN Self-Test Mode**.

Table 17-5. Operations Available in Each Mode

LIN mode		UART mode	LIN self-test mode
LIN master mode	LIN slave mode [auto baud rate]/ LIN slave mode [fixed baud rate]		
Header transmission Response transmission Response reception Wake-up transmission Wake-up reception Error detection	Header reception Response transmission Response reception Wake-up transmission Wake-up reception Error detection	UART transmission UART reception Error detection	Self test

Whether a transition has been caused to the LIN reset mode, the LIN mode, or the UART mode can be verified by reading the LMD bits in the LMDn register or the OMM0 bit in the LMSTn register.
The maximum mode transition time (maximum time from when the value is set to the LSUCn register to when the value is indicated in the LMSTn register) is the sum of three CPU clock (f_{CLK}) cycles and four cycles of the LIN communication clock source (input clock to the LIN/UART module selected by LINnMCK).
For a description of the LIN self-test mode, see **17.6 LIN Self-Test Mode**.

17.3.1 LIN Reset Mode

Setting the OM0 bit in the LCUCn register to 0b (LIN reset mode) causes a transition to LIN reset mode. The change to LIN reset mode can be verified by determining that the OMM0 bit in the LMSTn register has been set to 0b (LIN reset mode). In this mode, the LIN communication and the UART communication functions are all halted, and fLIN also stops.
From LIN reset mode, transitions to LIN mode, UART mode, and LIN self-test mode can be made.

When the mode changes to LIN reset mode, the following registers are initialized to their reset values, and as long as LIN reset mode is in effect, they retain their initial values.

- LTRCn register
- LSTn register
- LESTn register
- LUOERn register

The following registers retain their previous values even when a transition to LIN reset mode is made:

- LCHSEL register
- LWBRn register
- LBRPn0 register
- LBRPn1 register
- LUSCn register
- LMDn register
- LBFCn register
- LSCn register
- LWUPn register
- LIEn register
- LEDEn register
- LDFCn register
- LIDBn register
- LCBRn register
- LUDBn0 register
- LDBnm register (m = 1 to 8)
- LUORn1 register
- LUTDRn register
- LURDRn register
- LUWTDRn register

17.3.2 LIN Mode

LIN mode can operate in the following submodes: LIN master mode, LIN slave mode [auto baud rate], and LIN slave mode [fixed baud rate].

In LIN master mode, the following operations can be performed: header transmission, response transmission, response reception, wake-up transmission, wake-up reception, and error detection. In LIN reset mode, setting the LMD bits in the LMDn register to 00b (LIN master mode) and the OM1 and OM0 bits in the LCUCn register to either 01b or 11b sets LIN master mode, turning the OMM1 and OMM0 bits in the LMSTn register to either 01b to 11b.
In LIN slave mode [auto baud rate] and LIN slave mode [fixed baud rate], header reception, response transmission, response reception, wake-up transmission, wake-up reception, and error detection can be performed.
The LIN slave mode [auto baud rate] allows automatic detection of the break field and the sync field, and sets a baud rate based on the results of measurement of a sync field. Operation is possible with baud rates from 1 kbps to 20 kbps. Set the LPRS[2:0] bits in the LWBRn register according to the target baud rate so that the frequency of the clock (prescaler clock) obtained by dividing the LIN communication clock source frequency by the prescaler is the corresponding value from the list.

[Target baud rate]	[Frequency of prescaler clock]
1 kbps to 20 kbps:	4 MHz Note
1 kbps to less than 2.4 kbps:	4 MHz
2.4 kbps to 20 kbps:	8 MHz to 12 MHz

Note Set the NSPB[3:0] bits in the LWBRn register to 0011b (4 sampling).

In LIN slave mode [fixed baud rate] allows automatic detection of the break field, the sync field, and the ID filed at a baud rate that is set in advance by the baud rate generator.
In LIN reset mode, setting the LMD bits in the LMDn register to 10b (LIN slave mode [auto baud rate] and setting the OM1 and OM0 bit in the LCUCn register to 01b or 11b sets LIN slave mode [auto baud rate]; and setting the LMD bits in the LMDn register to 11b (LIN slave mode [fixed baud rate]), and setting the OM1 and OM0 bits in the LCUCn register to 01b or 11b sets LIN slave mode [fixed baud rate], turning the OMM1 and OMM0 bits in the LMSTn register to 01b or 11b.

When changing a submode to another submode within LIN mode, a transition to LIN reset mode should first be made and change the LMD bits in the LMDn register.

The LIN mode provides the following two operation modes:

- LIN operation mode
- LIN wake-up mode

Figure 17-4 shows the transition of operation modes. Table 17-6 describes the transition conditions of operation modes.

Figure 17-4. Transition of Operation Modes

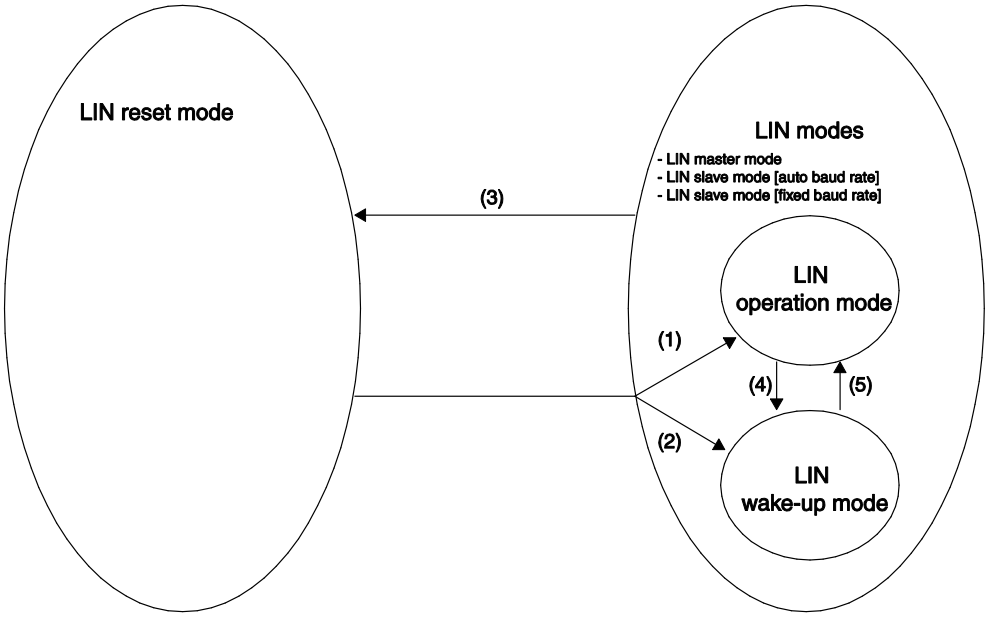

Table 17-6. Transition Conditions of Operation Modes

Step	Operation mode transition			Transition condition
(1)	LIN reset mode	→	LIN mode -LIN operation mode	LMD bits in LMDn register = 00b or 10b or 11b and OM1 and OM0 bits in LCUCn register = 11b
(2)	LIN reset mode	→	LIN mode -LIN wake-up mode	LMD bits in LMDn register = 00b or 10b or 11b and OM1 and OM0 bits in LCUCn register = 01b
(3)[Note 1]	LIN mode -LIN operation mode -LIN wake-up mode	→	LIN reset mode	OM0 bit in LCUCn register = 0b
(4)[Note 2]	LIN mode -LIN operation mode	→	LIN mode -LIN wake-up mode	OM1 and OM0 bits in LCUCn register = 01b
(5)[Note 2]	LIN mode -LIN wake-up mode	→	LIN mode -LIN operation mode	OM1 and OM0 bits in LCUCn register = 11b

Notes 1. When the LIN/UART module makes a transition from the LIN operating mode to the LIN reset mode while operating as a LIN slave (at a fixed baud rate), write 1 to the LIN0EN bit (or the LIN1EN bit) in the PER2 register after having cleared the given bit to 0.

2. Transition between LIN operation mode and LIN wake-up mode cannot be made when communication is going on (when the FTS bit in the LTRCn register is 1).

(1) LIN Operation Mode

In LIN operation mode, frame processing (header transmission, header reception, response transmission, response reception, and error detection) can be performed.
During a transition from LIN reset mode to LIN mode, setting the OM1 and OM0 bits in the LCUCn register to 11b changes the mode to LIN operation mode, changing the OMM1 and OMM0 bits in the LMSTn register to 11b. Communication settings should be performed after the LMSTn register has become 11b.

(2) LIN Wake-up Mode

In LIN wake-up mode, wake-up signal processing (wake-up transmission, wake-up reception, and error detection) can be performed.
During a transition from LIN reset mode to LIN mode, setting the OM1 and OM0 bits in the LCUCn register to 01b changes the mode to LIN wake-up mode, changing the OMM1 and OMM0 bits in the LMSTn register to 01b. Communication settings should be performed after the LMSTn register has become 01b.

17.3.3 UART Mode

In LIN reset mode, setting the LMD bits in the LMDn register to 01b (UART mode) and the OM0 bit in the LCUCn register to 1b changes the mode to UART mode, turning the OMM0 bit in the LMSTn register to 1b. Communication settings should be performed after the LMSTn register has become 01b.

17.3.4 LIN Self-Test Mode

Writing to the LSTCn register changes the mode to LIN self-test mode. The LSTM bit in the LSTCn register being 1 indicates that the mode has transitioned to the LIN self-test mode.
For further details of operations, see **17.6 LIN Self-Test Mode**.

17.4 LIN Mode

17.4.1 Operation Overview

(1) LIN Master Mode

(a) Header Transmission

Figure 17-5 shows the operation of the LIN/UART module (LIN master mode) in header transmission. Table 17-7 provides processing in header transmission.

Figure 17-5. Operation in Header Transmission

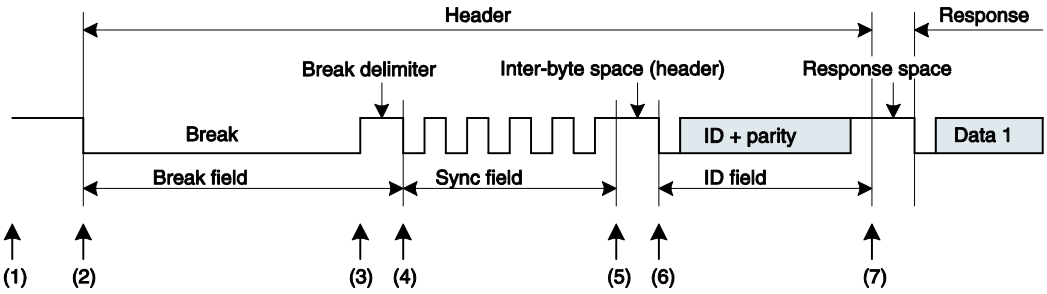

Table 17-7. Processing in Header Transmission

Step	Software processing	LIN/UART module processing
(1)	• Sets a baud rate • Sets noise filter ON/OFF • Enables interrupt • Enables error detection • Sets frame configuration parameters • Changes the LIN/UART module to the LIN master mode: LIN operation mode • Sets information on the frame to be transmitted (ID, parity, data length, response direction, Checksum method, and transmission data)	Waits for the setting of the FTS bit in the LTRCn register by software (idle).
(2)	Sets the FTS bit in the LTRCn register to 1 (start a frame transmission or wake-up transmission/reception).	Transmits a break.
(3)	Waits for an interrupt request.	Transmits a break delimiter.
(4)		Transmits a sync field (55H).
(5)		Transmits an inter-byte space (header).
(6)		Transmits an ID field.
(7)		Sets a successful header transmission flag.

For information about error detection, refer to **17.4.6 Error Status**.

(b) Response Transmission

Figure 17-6 shows the operation of the LIN/UART module (LIN master mode) in response transmission. Table 17-8 provides processing in response transmission.

Figure 17-6. Operation in Response Transmission

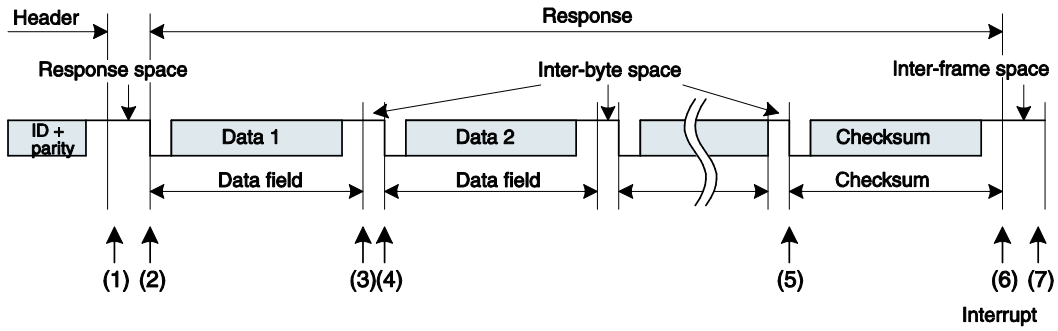

Table 17-8. Processing in Response Transmission

Step	Software processing	LIN/UART module processing
(1)	(When in frame separate mode) • Sets the RTS bit in the LTRCn register to 1 (response transmission/reception started). (When not in frame separate mode) • Waits for an interrupt request .	(When in frame separate mode) • Waits for the setting of the RTS bit in the LTRCn register to 1 by software. • When the bit is set to 1, sends a response space. (When not in frame separate mode) • Sends a response space.
(2)	Waits for an interrupt request.	Transmits the data 1.
(3)		Transmits an inter-byte space.
(4)		• Transmits the data 2. • Transmits an inter-byte space • Transmits the data 3. • Transmits an inter-byte space (Repeats the transmission of inter-byte spaces as many times as the data length specified in bits RFDL[3:0] in the LDFCn register, and stops the transmission when the BER flag in the LESTn register is 1 (bit error detected). If an error occurs, does not perform the Checksum transmission in item (5)). :
(5)		Transmits the checksum.
(6)		• Sets a successful frame/wake-up transmission flag. • Sets the FTS bit in the LTRCn register to 0 (frame transmission or wake-up transmission/reception stopped). (When in frame separate mode) • Sets the RTS bit in the LTRCn register to 0 (response transmission/reception stopped).
(7)	• Processing after communication Checks the LSTn register and clears flags.	Idle

For information about error detection, refer to **17.4.6 Error Status**.

(c) Response Reception

Figure 17-7 shows the operation of the LIN/UART module (LIN master mode) on response reception. Table 17-9 provides processing in response reception.

Figure 17-7. Operation in Response Reception

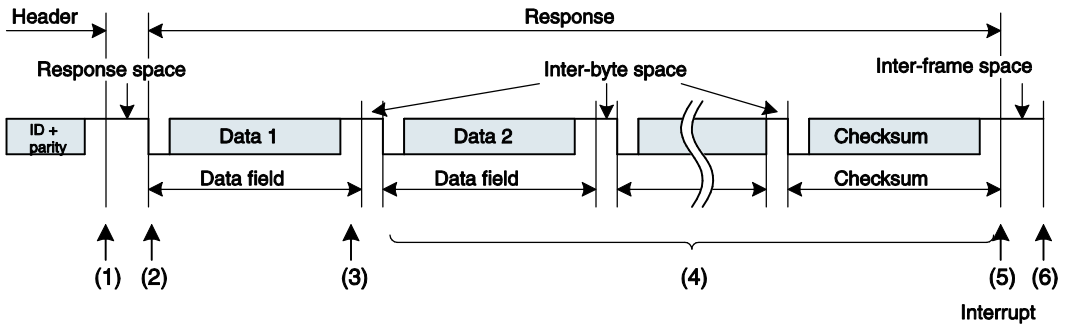

Table 17-9. Processing in Response Reception

Step	Software processing	LIN/UART module processing
(1)	Waits for an interrupt request (no processing).	Waits for detection of a start bit.
(2)		Receives the data 1 when the start bit is detected.
(3)		Sets the successful data 1 reception flag.
(4)		• Receives the data 2 when the start bit is detected. • Receives the data 3 when the start bit is detected. Repeats the transmission of inter-byte spaces as many times as the data length specified in bits RFDL[3:0] in the LDFCn register, and stops the transmission when any bit in the LESTn register is 1 (bit error detected). If an error occurs, the checksum determination in item (5) is not performed). : • Receives the checksum when the start bit is detected.
(5)		• Determines the checksum. • Sets the successful frame/wake-up reception flag. • Sets the FTS bit in the LTRCn register to 0 (frame transmission or wake-up transmission/reception stopped).
(6)	• Processing after communication Reads the received data. Checks the LSTn register and clears flags.	Idle

For information about error detection, refer to **17.4.6 Error Status**.

(2) LIN Slave Mode

(a) Header Reception

Figure 17-8 shows the operation of the LIN/UART module (LIN slave mode) in header reception. Table 17-10 provides processing in header reception.

Figure 17-8. Operation in Header Reception

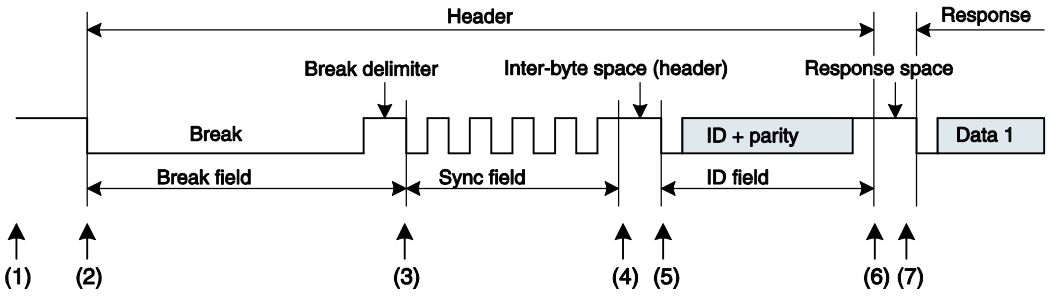

Table 17-10. Processing in Header Reception

Step	Software processing	LIN/UART module processing
(1)	• Sets a baud rate. • Sets noise filter ON/OFF. • Enables interrupt. • Enables error detection. • Sets frame configuration parameters. • Changes the LIN/UART module to the LIN slave mode: LIN operation mode. • Sets the FTS bit in the LTRCn register to 1 (header reception or wake-up transmission/reception started).	Waits for the setting of the FTS bit in the LTRCn register by software.
(2)	Waits for an interrupt request.	Waits for detection of a break field.
(3)		Detects a break field (in the case of LIN slave mode [fixed baud rate]; for break field detection timing in the case of LIN slave mode [auto baud rate], see **(1) Auto Baud Rate Correction Function)**.
(4)		• Detects a sync field (55H) • Sets the baud rate generator (in the case of LIN slave mode [auto baud rate]) • Clears the no-response request bit (LNRR bit).
(5)		• Receives an ID field. • Checks an ID parity bit
(6)		Sets a header reception complete flag.
(7)	• Checks the LSTn register and clears flags. • Checks the LIDBn register and prepares a response.	• Completes a header reception process. • Waits for a response request.

n = 0, 1

The LIN/UART module can receive a break field during transmission or reception of a frame. Here, a reception status interrupt might be generated on the detection of a framing error, bit error, etc, at the position of the stop bit of the frame preceding break field reception.

For information about error detection, refer to **17.4.6 Error Status**.

(1) Auto Baud Rate Correction Function

In LIN slave mode [auto baud rate], the system always measures the low-level widths that are received. If the first “Low” width is 10 times (if the BLT bit in the LBFCn register is “0”) or 11 times (if the BLT bit in the LBFCn register is “1”) or greater calculated from the average of the starting 2 bits (the period of the consecutive fall edges from the beginning of the sync field) of the sync field, the system concludes that the detection of a break field was successful, and verifies that the data in the sync field is 55H. When confirming that the data is 55H and the reception of the sync field is successful, the system automatically sets the baud rate correction results in the LBRPn1 and LBRPn0 registers.
If data is received up to the ID field without error, a successful header reception interrupt is generated at the stop bit position.
If the sync field data is not 55H, the system concludes that the detection of a sync field failed, and sets a sync field error flag, and generates an error detection interrupt.
In such a case, the LIN/UART module waits for the detection of another break field (“Low”) without baud rate correction.

Figure 17-9. Header Reception in LIN Slave Mode [Auto Baud Rate] (in Normal Operation)

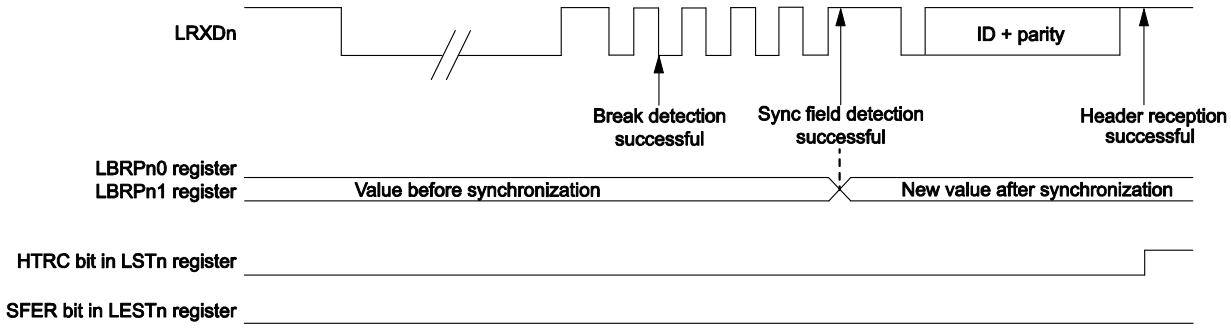

Figure 17-10. Header Reception in LIN Slave Mode [Auto Baud Rate] (Sync Field Error)

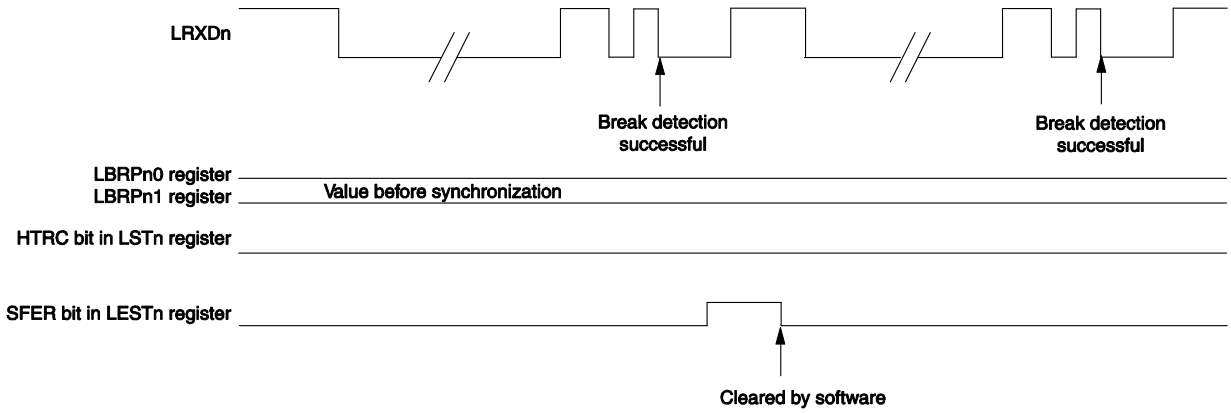

(b) Response Transmission

Figure 17-11 shows the operation of the LIN/UART module (in LIN slave mode) in response transmission. Table 17-11 provides processing in response transmission.

Figure 17-11. Operation in Response Transmission

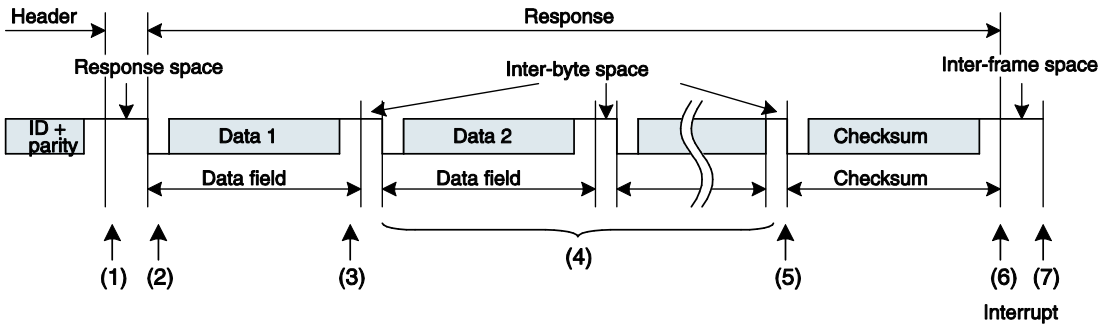

Table 17-11. Processing in Response Transmission

Step	Software processing	LIN/UART module processing
(1)	• Sets the LDFCn register. • Sets the LDBnm register. • Sets the RTS bit in the LTRCn register to 1 (response transmission/reception started).	• Waits for the setting by software of the RTS bit or the LNRR bit in the LTRCn register. • Sends a response space after the RTS bit in the LTRCn register is set to 1.
(2)	Waits for an interrupt request.	Transmits the data 1.
(3)		Transmits the inter-byte space.
(4)		• Transmits the data 2. • Transmits an inter-byte space • Transmits the data 3. • Transmits an inter-byte space (Repeats the transmission of inter-byte spaces as many times as the data length specified in bits RFDL[3:0] in the LDFCn register, and stops the transmission when the BER bit in the LESTn register is 1 (bit error detected). If an error occurs, the checksum transmission in item (5) is not performed). :
(5)		Transmits the checksum.
(6)		• Sets a successful frame/wake-up transmission flag or an error flag. • Sets the RTS bit in the LTRCn register to 0 (response transmission/reception stopped)
(7)	• Processing after communication Checks the LSTn register and clears flags.	• Completes the response transmission process. • Waits for a new break.

The LIN/UART module can receive a break field during the transmission or reception of a frame. Here, a reception status interrupt might be generated on the detection of a framing error, bit error, etc, at the position of the stop bit of the frame preceding break field reception.
For information about error detection, refer to **17.4.6 Error Status**.

(c) Response Reception

Figure 17-12 shows the operation of the LIN/UART module (LIN slave mode) in response reception. Table 17-12 provides processing in response reception.

Figure 17-12. Operation in Response Reception

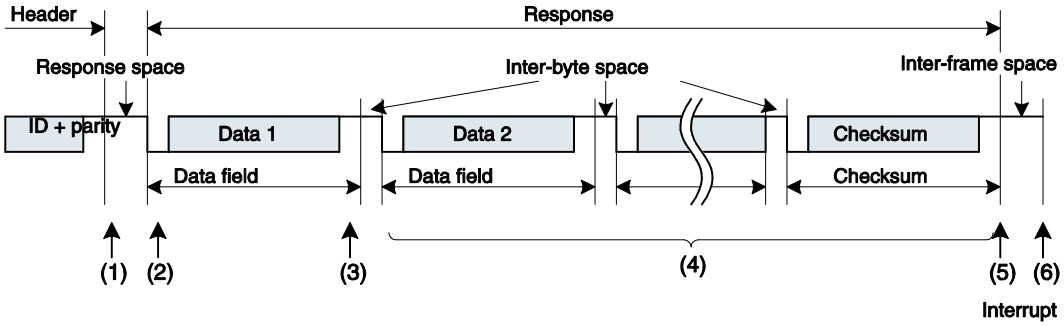

Table 17-12. Processing in Response Reception

Step	Software processing	LIN/UART module processing
(1)	• Sets the LDFCn register. • Sets the RTS bit in the LTRCn register to 1 (response transmission/reception started).	• Waits for the setting by software of the RTS bit or the LNRR bit in the LTRCn register. • Waits for detection of the start bit.
(2)	Waits for an interrupt request.	Receives the data 1 when the start bit is detected.
(3)		Sets the successful data 1 reception flag.
(4)		• Receives the data 2 when the start bit is detected. • Receives the data 3 when the start bit is detected. Repeats the transmission of inter-byte spaces as many times as the data length specified in bits RFDL[3:0] in the LDFCn register, and stops the transmission when any bit in the LESTn register is 1 (bit error detected). If an error occurs, the checksum determination in item (5) is not performed). : • Receives the checksum when the start bit is detected.
(5)		• Determines the checksum. • Sets a successful frame/wake-up reception flag or an error flag. • Sets the RTS bit in the LTRCn register to 0 (response transmission/reception stopped).
(6)	• Processing after communication Reads the received data. Checks the LSTn register and clears flags.	• Completes the response process. • Waits for a new break.

The LIN/UART module can receive a break field during the transmission or reception of a frame. Here, a reception status interrupt might be generated on the detection of a framing error, bit error, etc, at the position of the stop bit of the frame preceding break field reception.

For information about error detection, refer to **17.4.6 Error Status**.

(d) No-Response Request

Figure 17-13 shows the operation of the LIN/UART module (LIN slave mode) when no response is requested. Table 17-13 shows the processing that occurs when no response is requested.

Figure 17-13. Operation when No Response is Requested

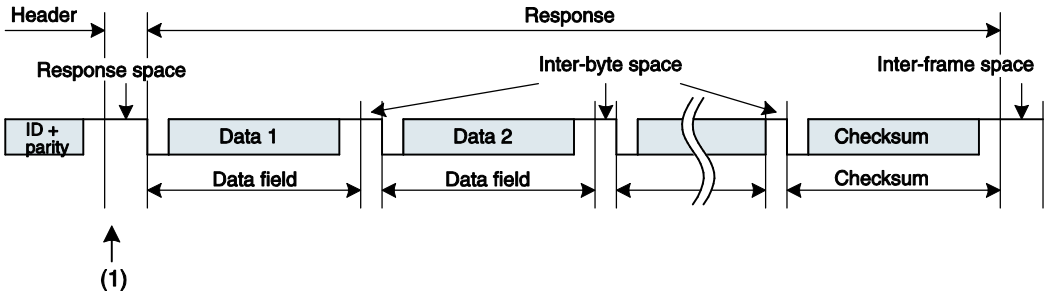

Table 17-13. Processing when No Response is Requested

Step	Software processing	LIN/UART module processing
(1)	• Sets the no-response request bit (LNRR bit) to 1.	• Waits for the setting of the no-response request bit (LNRR bit) by software. • Completes the frame reception process. • Waits for a new break.

17.4.2 Data Transmission/Reception

(1) Data Transmission

One bit of data is transmitted per 1 Tbit.
The data that is transmitted returns to the reception data input pin via the LIN transceiver. The received data and the transmitted data is compared bit by bit, and the results are stored in the BER flag in the LESTn register (see **17.4.6 Error Status**).
In LIN master mode and LIN slave mode [fixed baud rate], 1 Tbit is generated to be 16fLIN, and thus the sampling point for received data is at the 13th clock cycle (81.25% position).
In LIN slave mode [auto baud rate], if 1 Tbit is generated to be 4fLIN, the sampling point for received data is at the third clock cycle (75% position). If 1 Tbit is generated to be 8fLIN, the sampling point for received data is at the 7th clock cycle (87.5% position).
Figure 17-14 shows an example of data transmission timing.

Figure 17-14. Example of Data Transmission Timing (LIN Master Mode, LIN Slave Mode [Fixed Baud Rate])

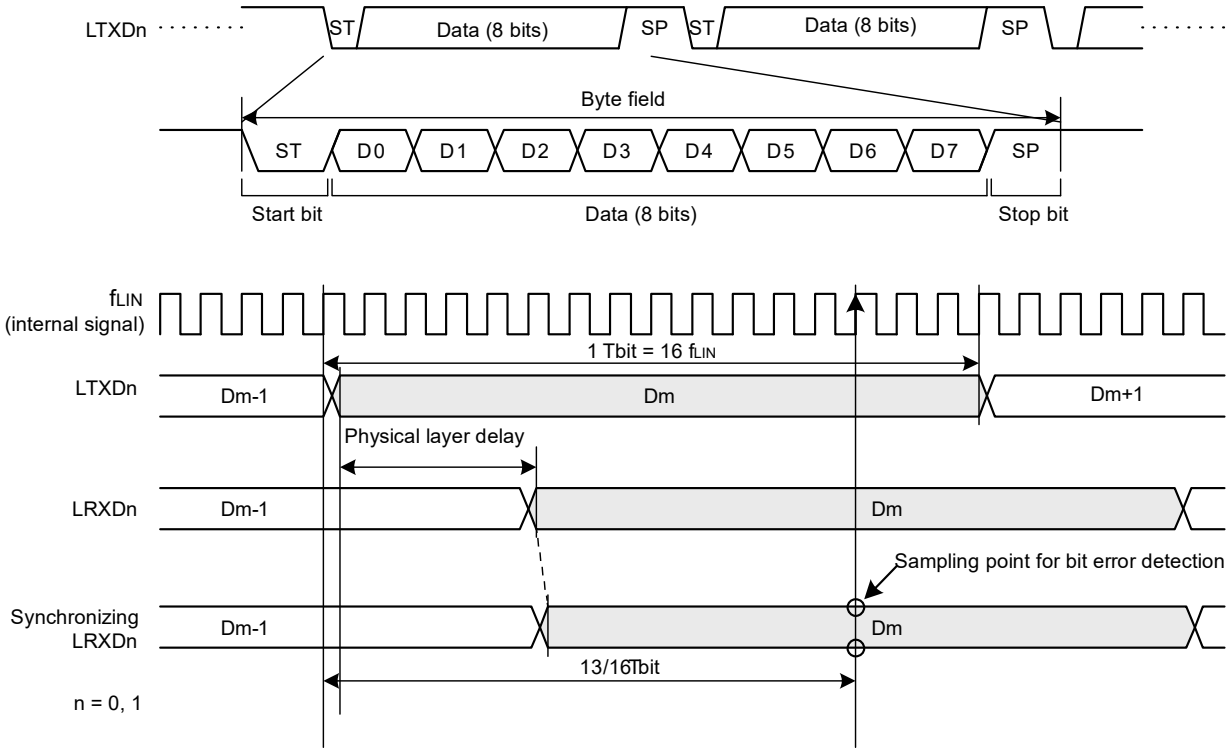

(2) Data Reception

Data reception is performed by using the synchronized LRXDn signal (an internal signal) that is the input from the LRXDn pin synchronized with prescaler clock.
The byte field is synchronized at the falling edge of the start bit for the synchronized LRXDn signal. After the falling edge is detected, sampling is performed again 0.5 Tbit later, and the falling edge is recognized as a start bit if the synchronized LRXDn signal is low. The falling edge is not recognized as a start bit if the LRXDn signal after the clearing of the resetting is low-fixed or if a high level is detected on re-sampling.
After the start bit is detected, the system samples 1 bit per Tbit.
The LIN/UART module has a noise filter function with respect to reception data. If the LRDNFS bit in the LMDn register is 0, the LIN/UART module uses a noise filter, and for a sampling value the value determined by a 3-sampling majority rule on prescaler clocks is used. If the LRDNFS bit in the LMDn register is 1, the LIN/UART module does not use a noise filter, and for a sampling value the value of the synchronized LRXDn value at the sampling position is used as is.

Figure 17-15 shows an example of data reception timing.

Figure 17-15. Example of Data Reception Timing (LIN Master Mode, LIN Slave Mode [Fixed Baud Rate])

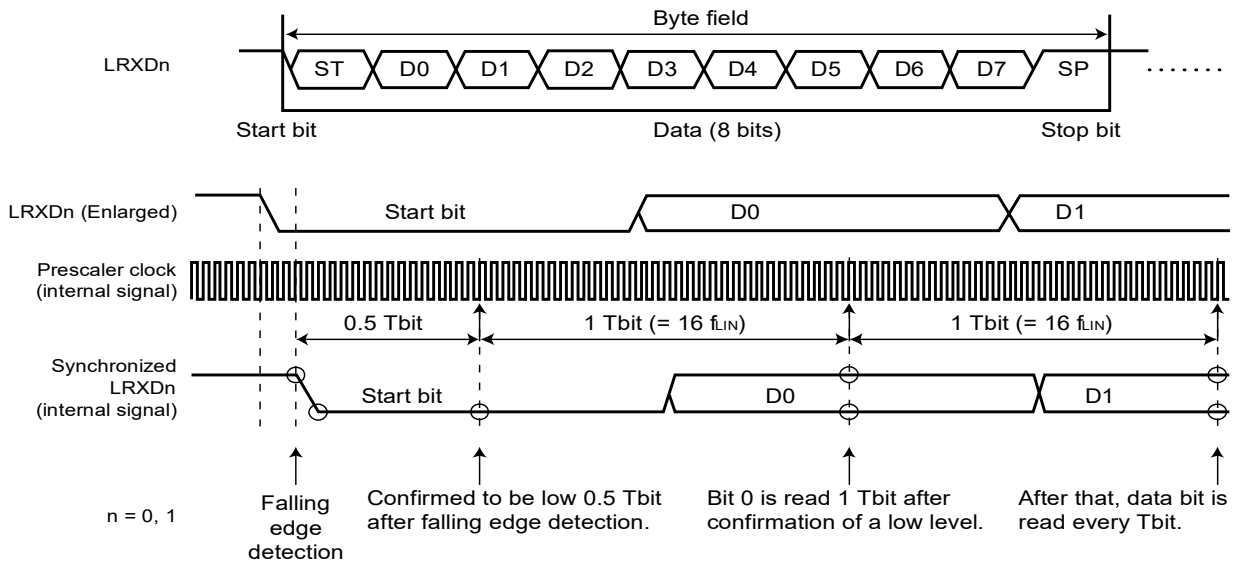

17.4.3 Transmission/Reception Data Buffering

This section explains the buffer processing that takes place when the LIN/UART module sends or receives data continuously.

(1) Transmission of LIN Frames

For an 8-byte transmission, the contents stored in registers LDBn1 to LDBn8 are sequentially transmitted to data areas 1 to 8 of the LIN frame. In the case of a 4-byte transmission, the contents stored in registers LDBn1 to LDBn4 are transmitted to data areas 1 to 4 of the LIN frame, but the contents of registers LDBn5 to LDBn8 are not transmitted. The transmitted checksum data is stored in the LCBRn register.
Figure 17-16 depicts the LIN transmission processing and the required buffer.

Figure 17-16. LIN Transmission Processing and Required Buffer

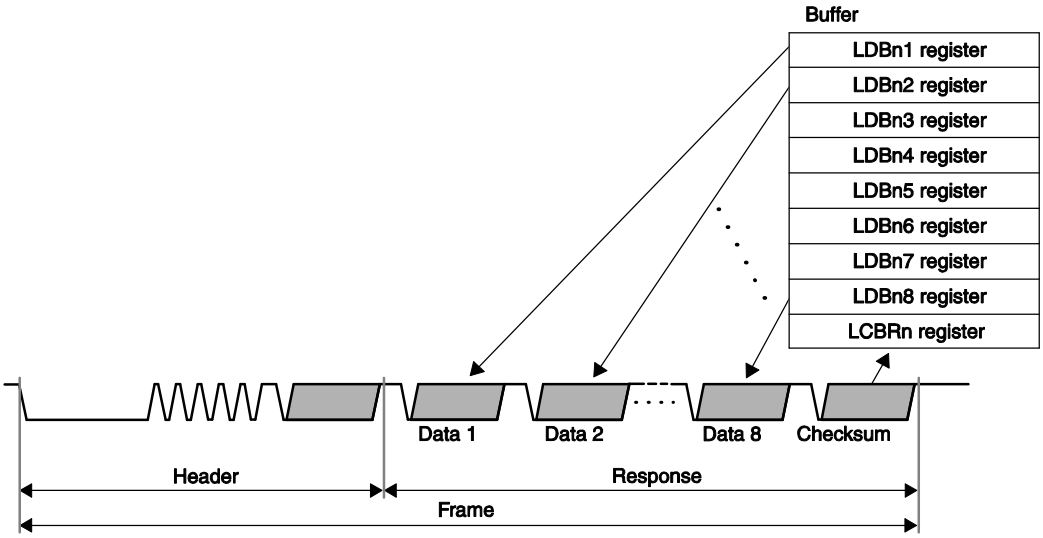

(a) Frame Separate Mode

Setting the FSM bit in the LDFCn register to 1 turns on the frame separate mode.
In frame separate mode, a header and a response are transmitted when prompted by separate transmission start requests.
When the transmission of a header is finished, the HTRC flag in the LSTn register turns 1 (successful header transmission).

Use frame separate mode when sending or receiving response data of 9 bytes or greater in LIN master mode.

(2) Reception of LIN Frames

For an 8-byte reception, the contents of data areas 1 to 8 of the LIN frame is stored in registers LDBn1 to LDBn8, respectively, upon receipt of a stop bit. In the case of a 4-byte reception, the contents of data areas 1 to 4 of the LIN frame are stored in registers LDBn1 to LDBn4, respectively; however, no data is stored in registers LDBn5 to LDBn8. Also, the received checksum data is stored in the LCBRn register.
Figure 17-17 depicts the LIN reception processing and the required buffer.

Figure 17-17. LIN Reception Processing and Required Buffer

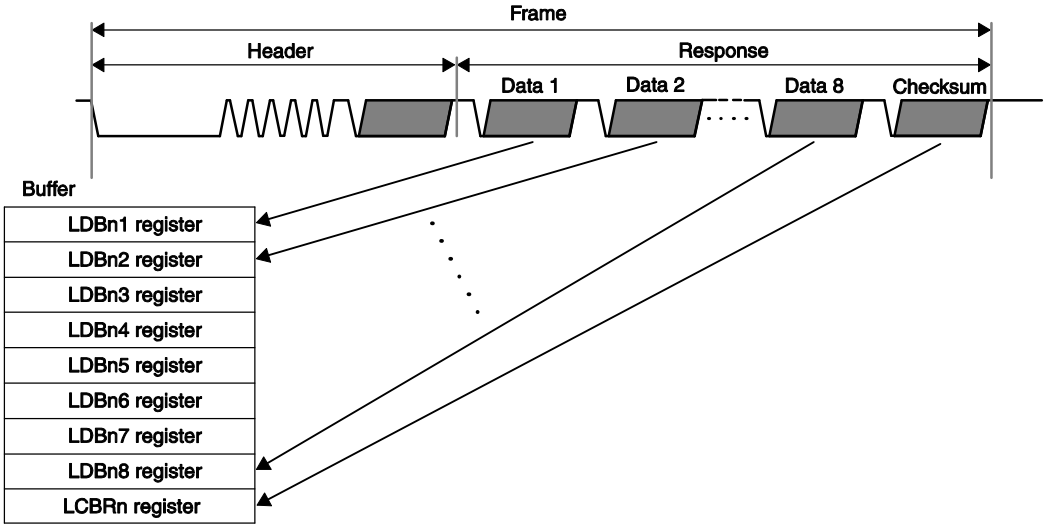

(a) Reception of Data 1

When the reception of the first byte of data is finished, the D1RC flag in the LSTn register turns 1 (successful data 1 reception).

(3) Multi-Byte Response Transmission/Reception Function

Normally in LIN communications, a response is 9 bytes or less (including a checksum field); however, responses in 10 bytes or greater can also be sent and received.
In such a case, the bit error, framing error, response preparation error detection, and auto checksum functions are enabled.

If the data length is greater than 8 bytes, the LSS bit should be set to 1 (indicating that the next data group to be sent or received is not the final data group) in the first data group (variable in 0 to 8 bytes) before sending or receiving the data group. After the transmission or reception, the user should determine whether the next data group is the final data group. If it is the final data group, the LSS bit should be set to 0 (indicating that the next data group to be sent or received is the final data group), and a checksum should be appended to the final data group.

By changing the RFDL bit settings when the RTS bit is 0, the user can change the data length for each data group.

When performing multi-byte response transmission/reception in LIN master mode, set the FSM bit in the LDFCn register to 1 (frame separate mode).

Caution In LIN slave mode, the LIN/UART module can detect a new break field during the transmission or reception of a response.

17.4.4 Wake-up Transmission/Reception

The wake-up transmission/reception can be used in LIN wake-up mode.

(1) Wake-up Transmission

In LIN wake-up mode, setting the RCDS bit in the LDFCn register to 1 (transmission) and the FTS bit in the LTRCn register to 1 (header reception or wake-up transmission/reception started) causes a wake-up signal to be output from the output pin. The low width of the wake-up signal should be set using the WUTL[3:0] bits in the LWUPn register. However, when the LWBR0 bit in the LWBRn register is 1 in LIN master mode, the low width is defined based on fa as the LIN system clock (f_{LIN}) regardless of the setting of LCKS bits in the LMDn register. Setting the baud rate to 19200 bps with fa selected and setting the WUTL[3:0] bits in the LWUPn register to 0100b (5 Tbits) allows 260 μs low level width of the signal to be output in LIN wake-up mode regardless of the setting of LCKS bits in the LMDn register.

If a wake-up low is output without any bit error, the FTC flag in the LSTn register turns 1 (successful response or wake-up transmission); when the FTCIE bit in the LIEn register is 1 (successful response/wakeup transmission interrupt enabled), an interrupt request is generated.
If a bit error is detected, wake-up transmission is canceled and the BER flag in the LESTn register is set to 1 (bit error detection).
Figure 17-18 shows the wake-up transmission timing.

Figure 17-18. Wake-up Transmission Timing

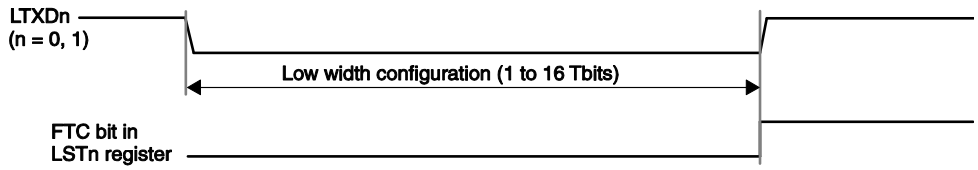

(2) Wake-up Reception

The detection of a wake-up signal involves the use of an input signal low width count function.
The input signal low width count function measures the low width of the input signal to the LRXDn pin, using the same sampling point as data reception. The function can measure the input signal low width of 2.5 Tbits of fLIN or greater.
In LIN master mode, appropriately setting the LWBR0 bit in the LWBRn register allows switching between LIN operation mode and LIN wake-up mode without changing any baud rate generator setting.
Set the LWBR0 bit in the LWBRn register to 0 when LIN Specification Package Revision 1.3 is used, and set it to 1 when LIN Specification Package Revision 2.x is used. When the LWBR0 bit is set to 1, fa is always selected as the LIN system clock (f_{LIN}) regardless of the setting of LCKS bits in the LMDn register (setting of LCKS bits not affected).
Setting the baud rate to 19200 bps with fa selected allows 130 μs or longer low level width of the input signal to be detected regardless of the setting of LCKS bits in the LMDn register.
When using this function, in LIN wake-up mode, set the RFT bit in the LDFCn register to 0 (LIN master mode: reception), or RCDS bit to 0 (LIN slave mode: reception), and the FTS bit in the LTRCn register to 1 (LIN master mode: frame transmission or wake-up transmission/reception started; LIN slave mode: header reception or wake-up transmission/reception started).
When the low width to be measured is reached, the FRC flag in the LSTn register turns 1 (successful response/wake-up reception). If the FRCIE bit in the LIEn register is 1 (successful response or wake-up reception interrupt enabled), an interrupt request is generated.

Figure 17-19. Input Signal Low Count Function

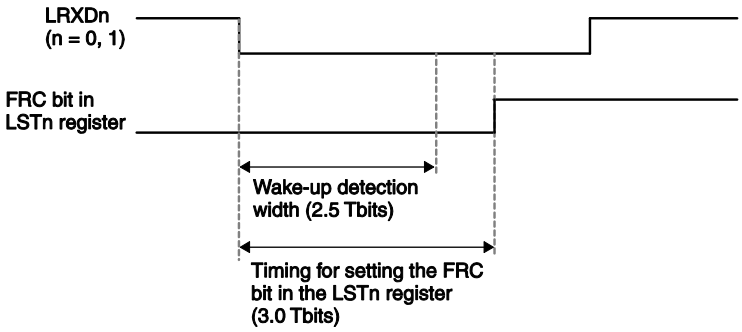

17.4.5 Status

During LIN mode operation, the LIN/UART module can detect seven types of statuses.
The four statuses, successful frame/wake-up transmission, successful frame/wake-up reception, error detection, successful header transmission//header reception, can generate interrupt requests.
Table 17-14 shows the types of statuses available in LIN master mode. Table 17-15 lists the types of statuses available in LIN slave mode [auto baud rate] and in LIN slave mode [fixed baud rate].

Table 17-14. Types of Statuses in LIN Master Mode

Status	Status set condition	Status clear condition	Operation mode capable of status detection	Corresponding bit	Interrupt
Reset	After the OM0 bit in the LCUCn register is set to not-LIN–reset-mode, if actually the LIN/UART module is cleared from LIN reset mode.	After the OM0 bit in the LCUCn register is set to LIN reset mode, if actually the LIN/UART module enters LIN reset mode.	All modes	OMM0 bit in LMSTn register	Not available
Operation mode	After the OM1 bit in the LCUCn register is set to LIN operation mode, if actually the LIN/UART module enters LIN operation mode.	After the OM1 bit in the LCUCn register is set to LIN wake-up mode, if actually the LIN/UART module enters LIN wake-up mode.	• LIN operation mode • LIN wake-up mode	OMM1 bit in LMSTn register	Not available
Frame/wake-up transmission end	When a frame (header transmission + response transmission), a wake-up signal, or a data group is transmitted successfully.	• When another communication is started • When cleared by software • After transition to LIN reset mode	• LIN operation mode • LIN wake-up mode	FTC flag in LSTn register	Available
Frame/wake-up reception end	When a frame (header transmission + response reception), a wake-up signal, or a data group is received successfully.	• When another communication is started • When cleared by software • After transition to LIN reset mode	• LIN operation mode • LIN wake-up mode	FRC flag in LSTn register	Available
Error detection	If any of the PRER flag, CSER flag, FER flag, FTER flag, PBER flag, and BER flags in the LESTn register turns 1 (error detected).	• When another communication is started • When cleared by software Note 1 • After transition to LIN reset mode	• LIN operation mode • LIN wake-up mode	ERR flag in LSTn register	Available
Data 1 reception end	The RFT bit in the LDFCn register is 0 (reception) and the first byte of the response field is received Note 2.	• When another communication is started • When cleared by software • After transition to LIN reset mode	LIN operation mode	D1RC flag in LSTn register	Not available
Header reception end	When a header field is received successfully.	• When another communication is started • When cleared by software • After transition to LIN reset mode	LIN operation mode	HTRC flag in LSTn register	Available

Notes 1. In LIN wake-up mode and LIN operation mode, the ERR flag in the LSTn register is cleared to 0 by writing 0 to the PRER flag, CSER flag, FER flag, FTER flag, PBER flag or BER flags in the LESTn register.

2. Not detected when the RFDL[3:0] bits in the LDFCn register are 0000b (0-byte + checksum).

Table 17-15. Types of Statuses in LIN Slave Mode

Status	Status set condition	Status clear condition	Operation mode capable of detecting a status	Corresponding bit	Interrupt
Reset	After the OM0 bit in the LCUCn register is set to not-LIN–reset-mode, if actually the LIN/UART module is cleared from LIN reset mode.	After the OM0 bit in the LCUCn register is set to LIN reset mode, if actually the LIN/UART module enters LIN reset mode.	All modes	OMM0 bit in LMSTn register	Not available
Operation mode	After the OM1 bit in the LCUCn register is set to LIN operation mode, if actually the LIN/UART module enters LIN operation mode.	After the OM1 bit in the LCUCn register is set to LIN wake-up mode, if actually the LIN/UART module enters LIN wake-up mode.	• LIN operation mode • LIN wake-up mode	OMM1 bit in LMSTn register	Not available
Frame/wake-up transmission end	When a response field, a wake-up signal, or a data group is transmitted successfully.	• When cleared by software • After transition to LIN reset mode	• LIN operation mode • LIN wake-up mode	FTC flag in LSTn register	Available
Frame/wake-up reception end	When a response field, a wake-up signal, or a data group is received successfully.	• When cleared by software • After transition to LIN reset mode	• LIN operation mode • LIN wake-up mode	FRC flag in LSTn register	Available
Error detection	If any of the PRER flag, IPER flag, CSER flag, SFER flag, FER flag, TER flag ,and BER flags in the LESTn register turns 1 (error detected).	• When cleared by software Note 1 • After transition to LIN reset mode	• LIN operation mode • LIN wake-up mode	ERR flag in LSTn register	Available
Data 1 reception end	The RCDS bit in the LDFCn register is 0 (reception) and the first byte of the response field is received Note 2.	• When cleared by software • After transition to LIN reset mode	LIN operation mode	D1RC flag in LSTn register	Not available
Header reception end	When a header field is received successfully.	• When cleared by software • After transition to LIN reset mode	LIN operation mode	HTRC flag in LSTn register	Available

Notes 1. In LIN wake-up mode and LIN operation mode, the ERR flag in the LSTn register is cleared to 0 by writing 0 to the PRER flag, IPER flag, CSER flag, SFER flag, FER flag, TER flag or BER flags in the LESTn register.

2. Not detected when the RFDL[3:0] bits in the LDFCn register are 0000b (0-byte + checksum).

17.4.6 Error Status

(1) LIN Master Mode

(a) Types of Error Statuses

The LIN/UART module can detect six types of error statuses in LIN master mode. The condition of these error statuses can be checked by means of the corresponding bits in the LESTn register.

All error statuses represent interrupt events.

Table 17-16 shows the types of error statuses.

Table 17-16. Types of Error Statuses in LIN Master Mode

Status	Error detection condition	Operation mode capable of error detection	Communication	Enable/disable detection	Corresponding bit
Bit error	The transmitted data and the data on the LIN bus monitored by the receive pin do not match[Note 1, 2]	• LIN operation mode • LIN wake-up mode	Cancel	O	BER flag in LESTn register
Physical bus error	• LIN bus is detected to be high when sending a break • LIN bus is detected to be low when sending a break delimiter • LIN bus is detected to be high when sending a wake-up	• LIN operation mode • LIN wake-up mode	Cancel	O	PBER flag in LESTn register
Timeout error	A frame or response transmission/reception does not terminate within a given time[Note 3]	LIN operation mode	Cancel	O	FTER flag in LESTn register
Framing error	In response field reception, a stop bit of each data byte is low	LIN operation mode	Cancel	O	FER flag in LESTn register
Checksum error	In response field reception, the result of checksum test gives an error	LIN operation mode	—	×	CSER flag in LESTn register
Response preparation error	The following conditions occur in frame separate mode: • The first reception data byte is received after completion of header transmission but before a response transmission/reception request is set • The first reception data byte is received after completion of the previous data group reception but before a transmission/reception request for another data group is set	LIN operation mode	Cancel	×	RPER flag in LESTn register

Notes 1. If a bit error is detected, the process is canceled after a stop bit is sent. If a bit error is detected in a non-data area, such as an inter-byte space, the transmission is canceled immediately after transmission of error bit. If a bit error is detected during the transmission of a wake-up, the transmission of the wake-up is canceled after the error-causing bit is sent.

2. In multi-byte response transmission, a bit error can be detected between data groups.

3. The timeout time depends on the response field data length (the RFDL[3:0] bits in the LDFCn register) and the checksum selection (the CSM bit in the LDFCn register), and this can be calculated according to the following formula:

Timeout time is 8 data bytes until setting of LTRCn register in frame separate mode (FSM bit of LDFCn register is set to 1).

[Frame timeout]

- On classic selection (when the CSM bit in the LDFCn register is 0):
  Timeout time = 49 + (number of data bytes + 1) × 14 [Tbit]
- On enhanced selection (when the CSM bit in the LDFCn register is 1):
  Timeout time = 48 + (number of data bytes + 1) × 14 [Tbit]

The aforementioned timeout time is a time greater than the TFRAME_MAX of LIN Specification Package Revision 1.3 on classic selection, or the TFRAME_MAX of LIN Specification Package Revision 2.x on enhanced selection.

[Response timeout]

Timeout time = (number of data bytes + 1) × 14 [Tbit]

Caution The error status is cleared when another communication is started, when cleared by software, or after transition to LIN reset mode.

(b) Target Time Area for LIN Error Detection

Figure 17-20 shows the time domain in which the LIN/UART module in master mode performs monitoring for error detection.

Figure 17-20. Target Time Area for LIN Error Detection (LIN Master Mode)

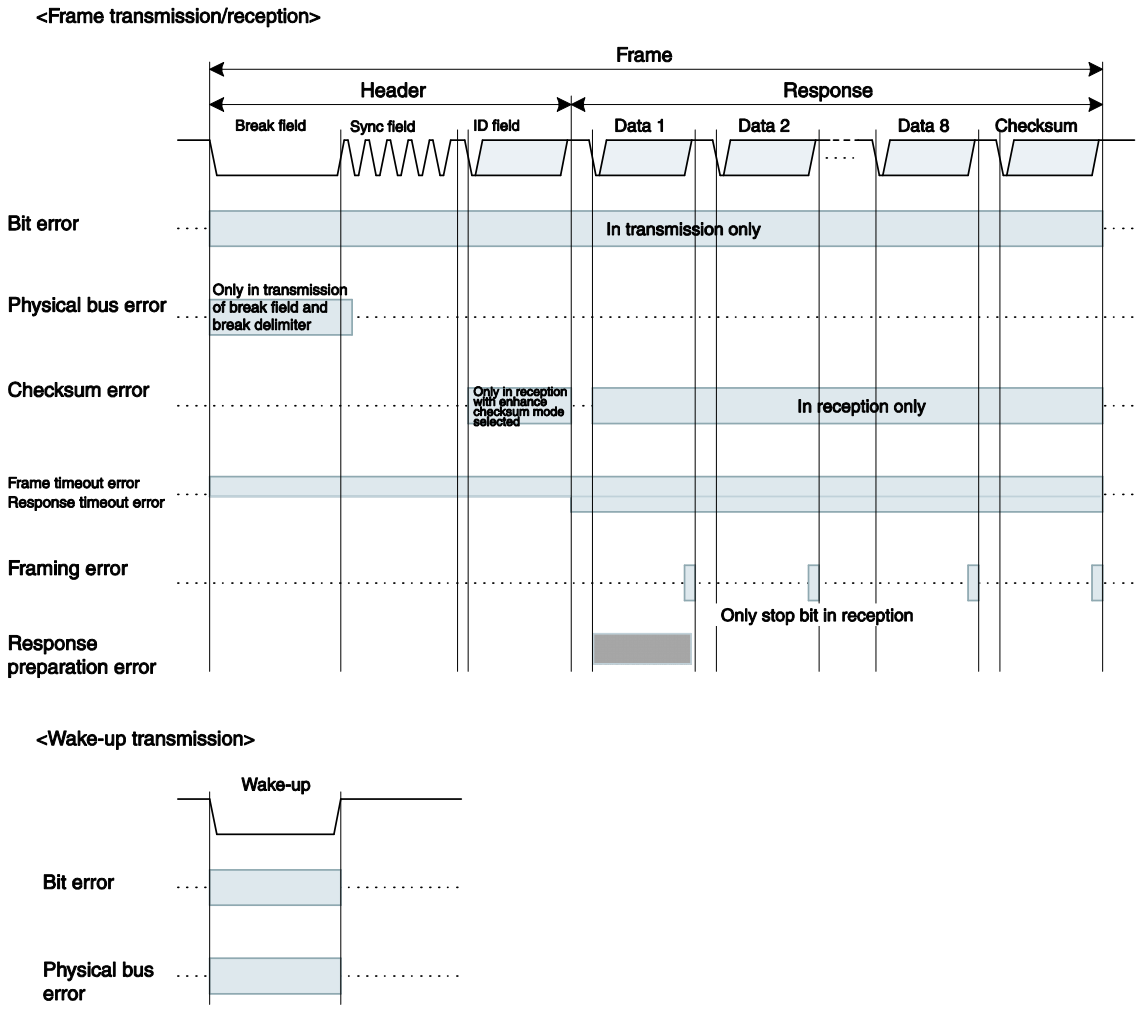

(2) LIN Slave Mode

(a) Types of Error Statuses

The LIN/UART module can detect seven types of error statuses in LIN slave mode [auto baud rate] or in LIN slave mode [fixed baud rate]. These error statuses can be verified by checking the corresponding bits in the LESTn register.

Table 17-17 shows the types of error statuses.

Table 17-17. Types of Error Statuses in LIN Slave Mode

Status	Error detection condition	Operation mode capable of error detection	Communication	Enable/ disable detection	Corresponding bit
Bit error	The transmitted data and the data on the LIN bus monitored by the receive pin do not match[Notes 1, 2]	• LIN operation mode • LIN wake-up mode	Cancel	O	BER flag in LESTn register
Timeout error	A frame or response transmission/reception does not terminate within a given time[Note 3]	LIN operation mode	Cancel	O	TER flag in LESTn register
Framing error	In frame reception, a stop bit of each data byte is low	LIN operation mode	Cancel	O	FER flag in LESTn register
Sync field error	If the width of the break low is greater than the width set by the BLT bit in the LBFCn register and the sync field is not 55H	LIN operation mode	Cancel	O Note 4	SFER flag in LESTn register
Checksum error	In response frame reception, the result of checksum test gives an error	LIN operation mode	— Note 5	×	CSER flag in LESTn register
ID parity error	If the received ID parity bit does not match the value that is automatically calculated by the LIN/UART module	LIN operation mode	Cancel	O	IPER flag in LESTn register
Response preparation error	• After the reception of a header, before the first reception data byte is received, response preparation is not made in time. • During a multi-byte response transmission/reception, before the first reception data byte of another data group is received, preparation for another data group is not made in time.	LIN operation mode	Cancel	×	RPER flag in LESTn register

Notes 1. If a bit error is detected, the process is canceled after a stop bit is sent. If a bit error is detected in a non-data area, such as an inter-byte space, the transmission is canceled immediately after transmission of error bit. If a bit error is detected during the transmission of a wake-up, the transmission of the wake-up is canceled after the error-causing bit is sent.

2. In multi-byte response transmission, a bit error can be detected between data groups.

3. The timeout time depends on the response field data length (the RFDL[3:0] bits in the LDFCn register) and the checksum selection (the LCS bit in the LDFCn register), and this can be calculated according to the following formulae:

Until the RTS or LNRR bit in the LTRCn register is set, the timeout time is set based on 8-byte data. Once the RTS bit is set, the timeout time is re-set based on the response field data length (the RFDL[3:0] bits in the LDFCn register). When the LNRR bit is set, the timeout function is stopped.

[Frame timeout]

- On classic selection (when the CSM bit in the LDFCn register is 0)
  Timeout time = 49 + (number of data bytes + 1) × 14 [Tbit]
- On enhanced selection (when the CSM bit in the LDFCn register is 1)
  Timeout time = 48 + (number of data bytes + 1) × 14 [Tbit]

The aforementioned timeout time is a time greater than the TFRAME_MAX of LIN Specification Package Revision 1.3 on classic selection, or the TFRAME_MAX of LIN Specification Package Revision 2.x on enhanced selection.

[Response timeout]

Timeout time = (number of data bytes + 1) × 14 [Tbit]

4. Only indication in the SFER flag can be enabled or disabled; error detection cannot be enabled or disabled.

5. Checksum determination is performed after response frame reception is completed. If the result is determined as an error, the successful reception flag is not set to 1.

Caution The error status is cleared when cleared by software or after transition to LIN reset mode.

(b) Target Time Area for LIN Error Detection

Figure 17-21 shows the time domain in which the LIN/UART module in slave mode performs monitoring for error detection.

Figure 17-21. Target Time Area for LIN Error Detection (LIN Slave Mode)

<R>

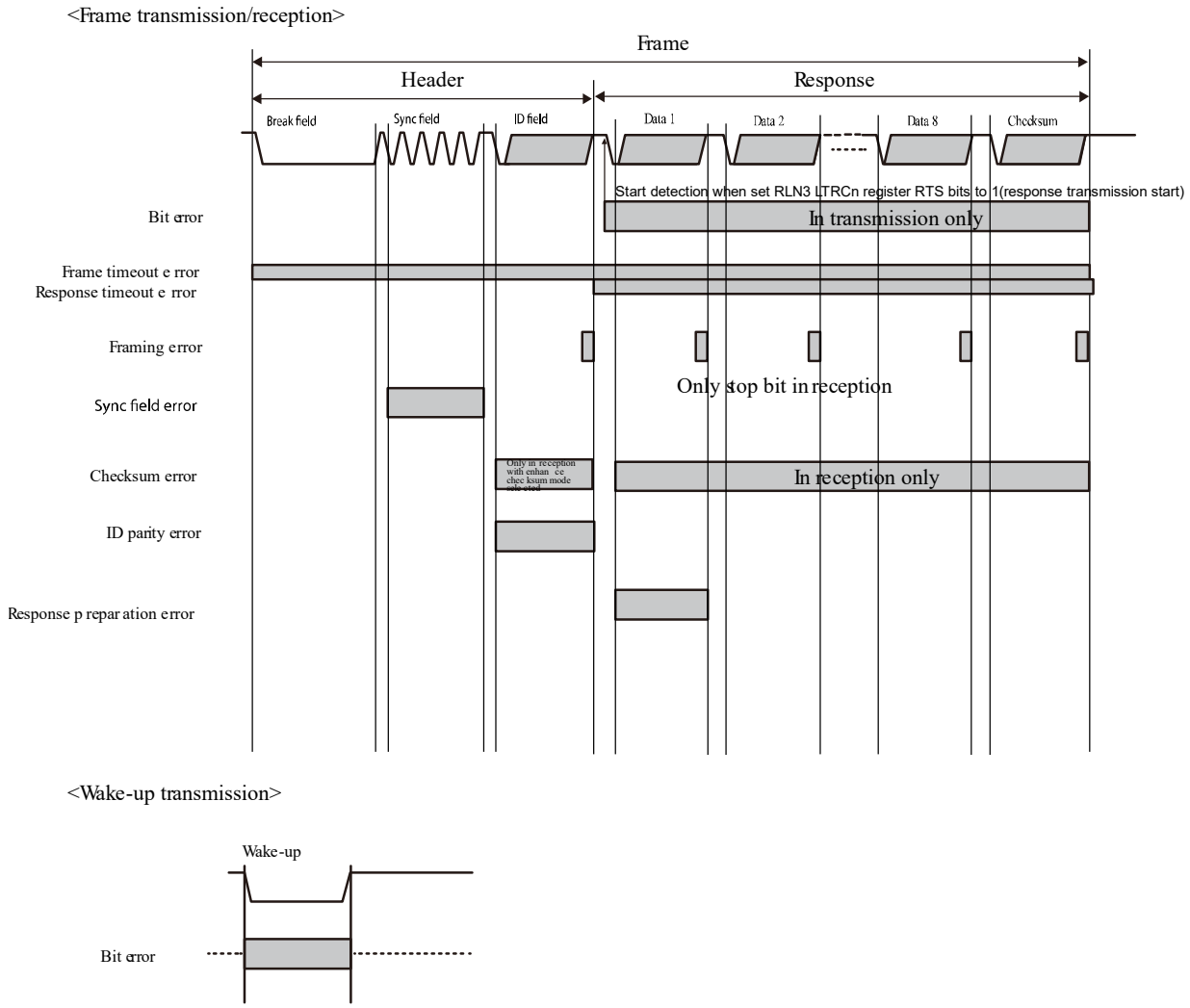

17.5 UART Mode

17.5.1 Operation Overview

(1) Transmission

Figure 17-22 shows LIN/UART module (in UART mode) transmission operations; Table 17-18 shows LIN/UART module (in UART mode) transmission processing.

Figure 17-22. LIN/UART Module (in UART mode) Transmission Operation

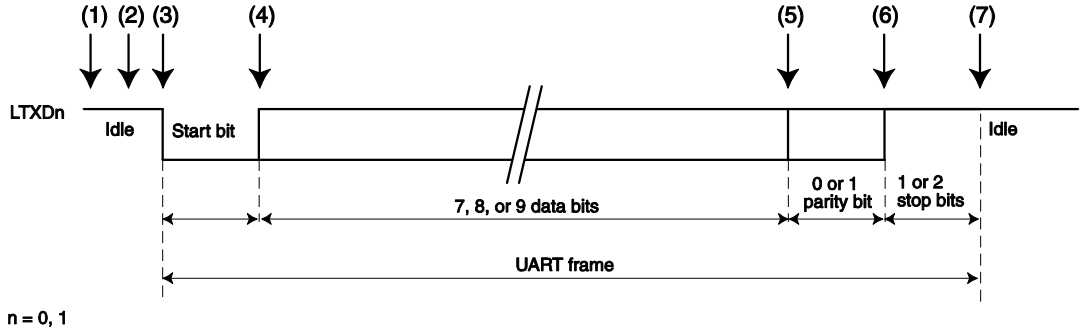

Table 17-18. LIN/UART Module (UART Mode) Transmission Processing

Step	Software processing	LIN/UART module processing
(1)	• Sets a baud rate. • Sets noise filter ON/OFF. • Sets error detection enable. • Sets data format • Sets an interrupt generation timing. • Clears the LIN/UART module from LIN reset mode • Sets the transmit enable bit (UTOE bit) to 1	• Waits for a transmission trigger (LUTDRn register) by software.
(2)	• Sets the transmission data in the UART transmission data register (LUTDRn register) or UART wait transmission data (LUWTDRn).	• Sets the transmission status flag.
(3)	• Waits for an interrupt request. [When the UTIGTS bit is 0 (a transmission interrupt request is output upon start of transmission)] • When transmitting data continuously, sets another piece of transmission data in the UART transmission data register (LUTDRn register), waits for the generation of an interrupt request.	• Transmits a start bit (for switching between transmission and reception in half duplex communication, transmits a start bit after receiving 1 stop bit. This function is referred to in **17.5.1 (4) Transmission Start Wait Function**). [When the UTIGTS bit is 0 (a transmission interrupt request is output upon start of transmission)] • Outputs a transmission interrupt.
(4)		Transmits the data set in the UART (wait) transmission data register.
(5)		Transmits a parity bit when parity is used.
(6)		Transmits 1 or 2 stop bits.
(7)	[When the UTIGTS bit is 0 (a transmission interrupt request is output upon start of transmission)] • If another piece of transmission data is set, goes to step (3). [When the UTIGTS bit is 1 (a transmission interrupt request is output upon end of transmission)] • When transmitting data continuously, goes to step (2).	[When the UTIGTS bit is 0 (a transmission interrupt request is output upon start of transmission)] • If another piece of transmission data is set, goes to step (3). • If another piece of transmission data is not set, clears the transmission status flag. [When the UTIGTS bit is 1 (a transmission interrupt request is output upon end of transmission)] • Outputs a transmission interrupt. • Clears the transmission status flag

(a) Continuous Transmission

The LIN/UART module (in UART mode) can transmit multiple sets of data continuously by using the LUTDRn register. Figure 17-23 shows an operating example where the transmission interrupt generation timing is the start of transmission. Figure 17-24 shows an operating example where the transmission interrupt generation timing is the end of transmission.

Figure 17-23. LIN/UART Module (in UART mode) Continuous Transmission Operation (when UTIGTS Bit in LUORn1 Register is 0)

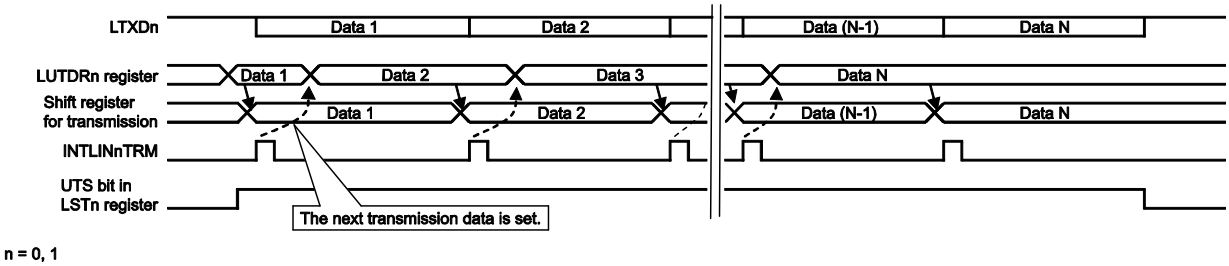

Figure 17-24. LIN/UART Module (in UART mode) Continuous Transmission Operation (when UTIGTS Bit in LUORn1 Register is 1)

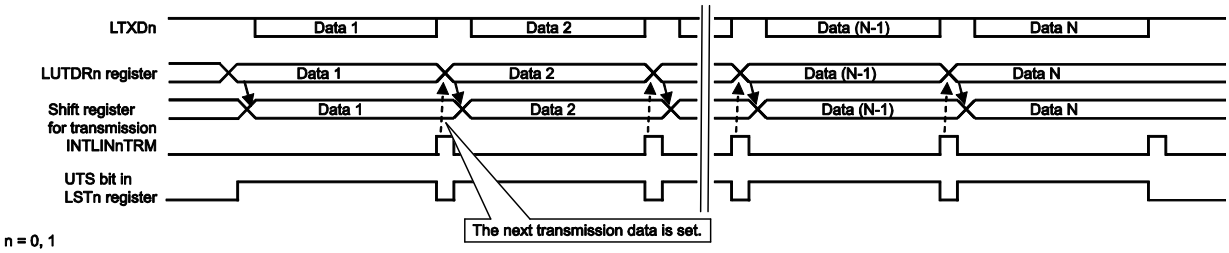

An interrupt can be generated at the end of a transmission by changing the UTIGTS bit in the LUORn1 register from 0 to 1 after the start of transmission of final data, provided only that the transmission interrupt generation timing is the start of transmission and the end of transmission of final data needs to be known.

(b) UART Buffer Transmission

The LIN/UART module (in UART mode) has a maximum of nine bytes of UART buffers, and thus it is capable of performing continuous transmissions through the use of UART buffers.
Figure 17-25 shows the UART buffer transmission operation in the LIN/UART module (in UART mode). Table 17-19 shows the UART buffer transmission processing.

Figure 17-25. UART Buffer Transmission in LIN/UART Module (in UART mode)

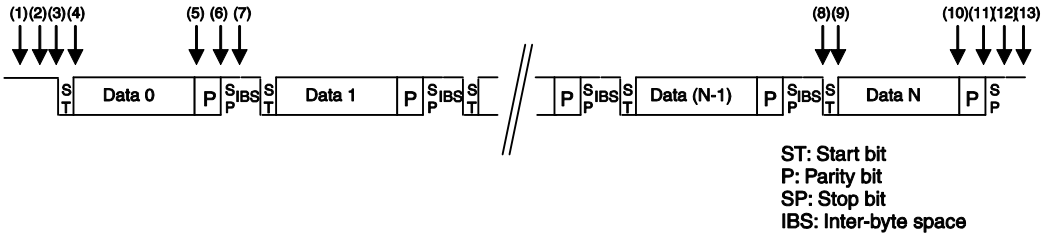

Table 17-19. UART Buffer Transmission Processing in LIN/UART Module (in UART mode)

Step	Software processing	LIN/UART module processing
(1)	• Sets a baud rate. • Sets noise filter ON/OFF. • Sets error detection enable. • Sets data format. • Sets an interrupt generation timing to the end of transmission. • Clears the LIN/UART module from LIN reset mode. • Sets the transmit enable bit (UTOE bit) to 1	• Waits for a transmission trigger (RTS bit) by software.
(2)	• Sets a UART buffer data length and whether the system must wait for the start of transmission. • Sets the transmission data in the UART data buffer 0 register (LUDBn0) and the LIN/UART data buffer m register (LDBnm). • Sets the UART buffer transmission start bit (RTS).	• Sets the transmission status flag.
(3)	• Waits for an interrupt request.	• Transmits a start bit (for switching between transmission and reception in half duplex communication, transmits a start bit after receiving 1 stop bit. This function is referred to in **17.5.1 (4) Transmission Start Wait Function**).
(4)		Transmits the data set in the UART data buffer 0 register (LUDBn0) and the LIN/UART data buffer m register (LDBnm).
(5)		Transmits a parity bit when parity is used.
(6)		Transmits 1 or 2 stop bits
(7)		Transmits an inter-byte space (idle).
		Repeats steps (3) to (7) until frame count -1 that was set in the UART buffer data length select bits is reached.
(8)		Transmits a start bit.
(9)		Transmits the data set in the LIN/UART data buffer m register (LDBnm).
(10)		Transmits a parity bit when parity is used.
(11)		Transmits 1 or 2 stop bits.
(12)		• Sets the buffer transmission end flag. • Clears the UART buffer transmit start (RTS) bit. • Outputs a transmission interrupt. • Clears the transmission status flag.
(13)	• Checks the LSTn register and clears flags • When transmitting data continuously, goes to step (2).	

n = 0, 1

(2) Reception

Figure 17-26 shows the LIN/UART module (in UART mode) reception operation. Table 17-20 shows the LIN/UART module (in UART mode) reception processing.

Figure 17-26. LIN/UART Module (in UART Mode) Reception Operation

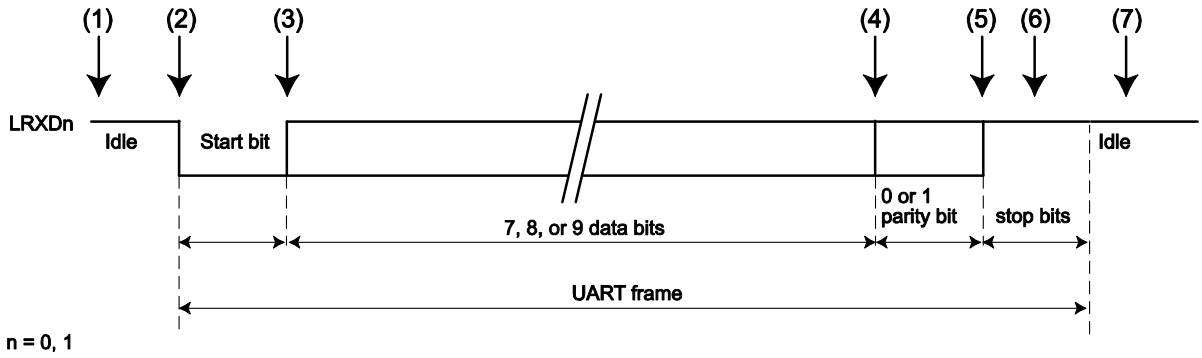

Table 17-20. LIN/UART Module (in UART Mode) Reception Processing

Step	Software processing	LIN/UART module processing
(1)	• Sets a baud rate. • Sets noise filter ON/OFF. • Sets error detection enable. • Sets data format. • Clears the LIN/UART module from LIN reset mode. • Sets the receive enable bit (UROE bit) to 1.	• Waits for reception enable state switching by software. • Waits for detection of a start bit.
(2)	Waits for an interrupt request.	• Waits for a falling edge from the reception pin, and detects a start bit. • Sets the reception status flag.
(3)		Receives data.
(4)		Receives a parity bit when parity is used.
(5)		Receives only 1 stop bit.
(6)		• Outputs a successful reception interrupt. • Clears the reception status flag.
(7)	Checks the LSTn register and clears flags.	Waits for a falling edge from the reception pin.

n = 0, 1

(3) Expansion Bits

The LIN/UART module (in UART mode) can transmit and receive 9-bit long data by setting the UEBE bit in the LUORn1 register to 1.

(a) Expansion Bit Transmission

The LIN/UART module (in UART mode) can transmit 9-bit long data when the expansion bit enable bit (UEBE) in UART option register 1 (LUORn1) is 1 and by writing the 9-bit data to either the UART transmission data register (LUTDRn) or the UART wait transmission data register (LUWTDRn).

Figure 17-27. Transmission Example When Expansion Bit is Enabled (LSB First)

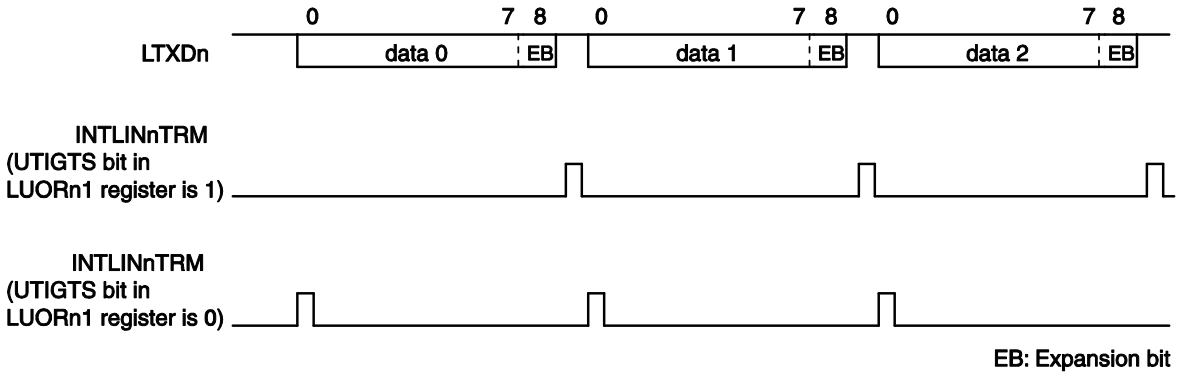

(b) Expansion Bit Reception

With the LIN/UART module (in UART mode), 9-bit data can always be received without requiring a comparison of expansion bits, provided that the expansion bit enable bit (UEBE) in UART option register 1 (LUORn1) is 1, the expansion bit comparison disable bit (UECD) is 1, and the expansion bit/data comparison enable bit (UEBDCE) is 0. Irrespective of the particular setting of the expansion bit detection level select bit (UEBDL) in UART option register 1 (LUORn1), a successful LINn reception interrupt is generated (n = 0, 1) when 9-bit data is received.

Figure 17-28. Expansion Bit Reception Example (LSB First)

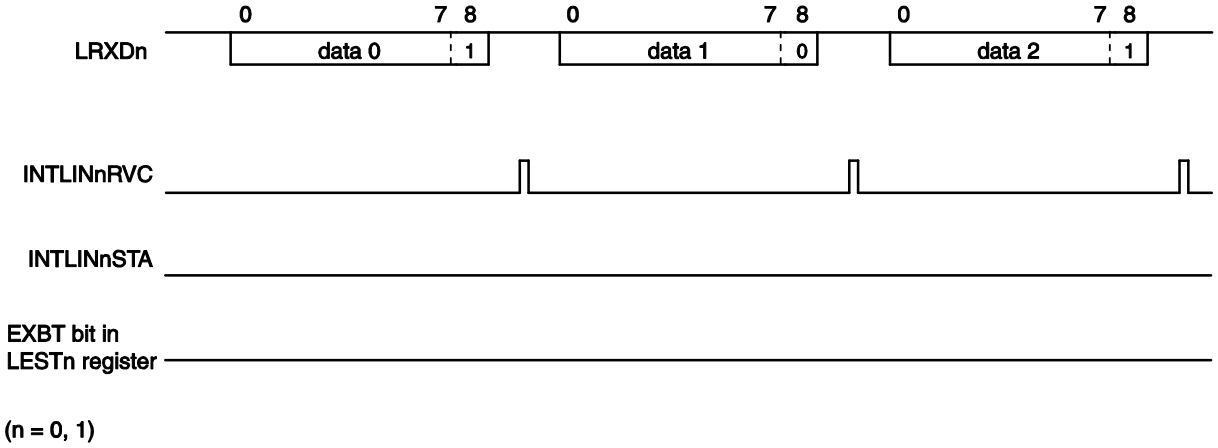

(c) Expansion Bit Reception (with Expansion Bit Comparison)

The LIN/UART module (in UART mode) can compare received expansion bits and the UEBDL bits when the expansion bit enable bit (UEBE) in UART option register 1 (LUORn1) is 1, the expansion bit comparison disable bit (UECD) is 0, and the expansion bit/data comparison enable bit (UEBDCE) is 0.
If the level that was set in the expansion bit detection level select bit (UEBDL) is detected, a LINn reception status interrupt is generated upon completion of data reception, and the expansion bit detection flag (EXBT) in the LIN/UART error status register (LESTn) is set. If the reversed value of an expansion bit detection level is detected, a successful LINn reception interrupt is generated. In either case, the received data is stored in the UART reception data register (LURDRn), unless there was an overrun error.

Figure 17-29 shows an example when the expansion bit detection level select bit (UEBDL) is set to 0.

Figure 17-29. Expansion Bit Reception Example (with Expansion Bit Comparison) (LSB First, UEBDL = 0)

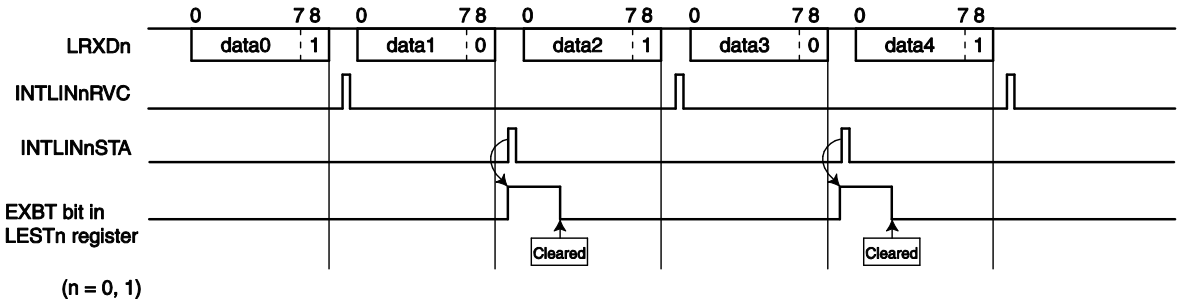

Notes 1. If a reception error (parity error, framing error, or overrun error) occurs in received data 0, 2, or 4 (if a reversed value of an expansion bit detection level is detected), a LINn reception status interrupt is generated, and the error flag is updated. In this case, a successful LINn reception interrupt is not generated

2. If a reception error (parity error, framing error, or overrun error) occurs in received data 1 or 3 (if an expansion bit detection level is detected), a LINn reception status interrupt is generated, and the error flag is updated. In the case of an overrun error, the expansion bit detection flag (EXBT) is also set.

(d) Expansion Bit Reception (with Data Comparison)

The LIN/UART module (in UART mode) compares the 8-bit received data excluding the expansion bits with the preset LIDBn register value if the level that was set in the expansion bit detection level select bit (UEBDL) is detected when the expansion bit enable bit (UEBE) in UART option register 1 (LUORn1) is 1, the expansion bit comparison disable bit (UECD) is 0, and the expansion bit/data comparison enable bit (UEBDCE) is 1. If the compared two values agree, the following operations are executed.

- A LINn reception status interrupt is generated (n = 0 or 1).
- The expansion bit detection flag (EXBT) is set.
- The ID match flag (IDMT) is set.
- The received data is stored in the UART reception data register (LURDRn).

Even if the compared two values agree, a successful LINn reception interrupt is not generated.

If the compared two values do not agree, neither successful LINn reception interrupt nor LINn reception status interrupt is generated, thus not setting the EXBT or IDMT flag to 1. Here, the received data is not stored in the UART reception data register (LURDRn).

When changing the UEBDCE bit to 0, complete it before the next data is completely received.

Figure 17-30 shows an example when the expansion bit detection level select bit (UEBDL) is set to 0.

Figure 17-30. Expansion Bit Reception Example (with Data Comparison) (LSB First, UEBDL = 0)

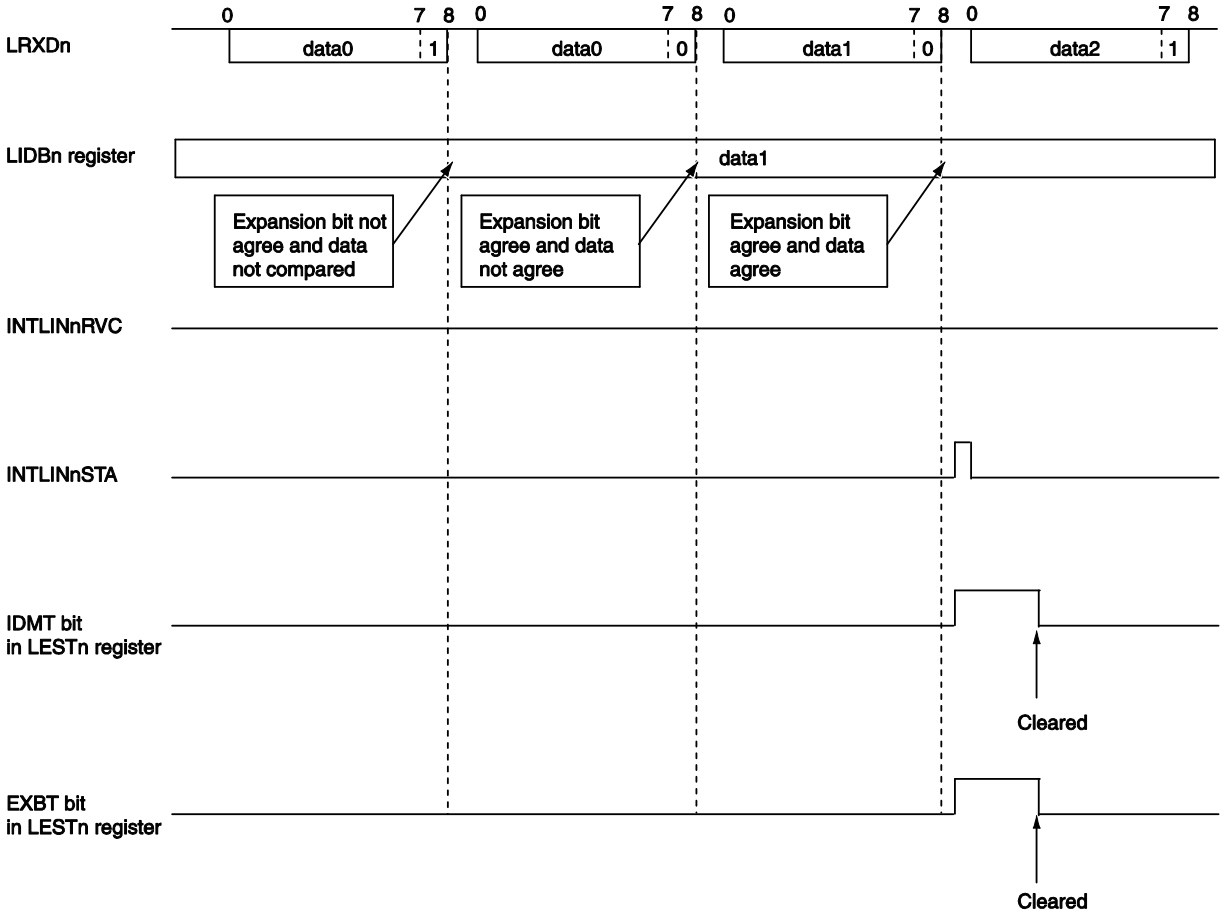

Caution If a reception error (parity error, framing error, or overrun error) occurs, a LINn reception status interrupt is generated, and the error flag is updated. In the case of an overrun error with matching of the compare result, EXBT and IDMT flags are also set to 1.

(4) Transmission Start Wait Function

For performing half-duplex communication, the LIN/UART module (in UART mode) has the function of securing the reception stop bit when switching from reception to transmission.
If it is desired to delay the start of transmission until the stop bits for the reception are completed, set data in the LUWTDRn register, which is used only for the wait function, instead of setting transmission data in the LUTDRn register as a start-of-transmission request. When transmitting from the UART buffer, set 1 (UART buffer transmission enabled) in the RST bit in the LTRCn register with 1 set in the UTSW bit in the LDFCn register.
In such a case, the LIN/UART module delays the start of transmission until the stop bits of reception data are completed.
It should be noted that even if the UART stop bit length select bit (USBLS) is 1 (stop bits = 2 bits), delay is made only for 1 bits.

Figure 17-31 shows the operation of transmission wait function.

Figure 17-31. Transmission Wait Function (if transmission data is set during the stop bits in the received data)

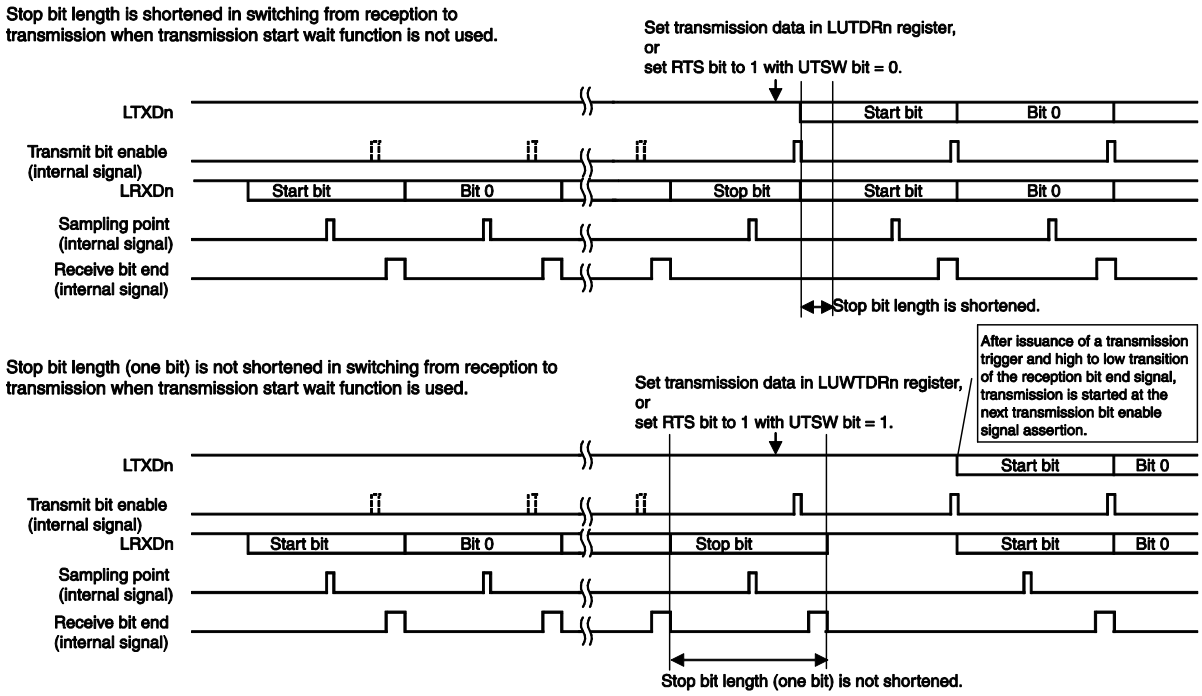

(5) SNOOZE Mode Function

The LIN/UART module (UART mode) is provided with SNOOZE mode during reception. The SNOOZE mode allows data reception without CPU operation when the LRXDn pin input is detected in STOP mode.
To use the LIN/UART module (UART mode) in SNOOZE mode, make the following settings before entering STOP mode.

- In SNOOZE mode, it is necessary to set the different baud rate for UART reception from that in normal operation. Refer to tables 17-21 to 17-24 and set the LBRPn register and LPRS[2:0] bits and NSPB[3:0] bits in the LWBRn register appropriately.
- Set the UWC bit in the UART standby control register (LUSCn). Also set the USEC and URDCC bits in the LUSCn register to enable or disable error interrupt generation upon occurrence of a communication error and comparison of the received data and the LIDBn register value, respectively.
- Set the UROE bit to 1 in the UART operation enable register (LUOERn) immediately before entering STOP mode.

After entering STOP mode, UART reception starts upon detection of the LRXDn edge (start bit input).

Cautions 1. SNOOZE mode can be set only when the LINnMCK bit in the LINCKSEL register is 0 (f_{CLK} selected) and the high-speed on-chip oscillator clock (f_{IH}) is selected for f_{CLK}.

2. The maximum transfer rate in SNOOZE mode is 4800 bps when the FRQSEL4 in the user option byte (000C2H/020C2H) is set to 0, and 2400 bps when FRQSEL4 is set to 1.

3. With UWC = 1, the UART can be used only if reception is started during STOP mode.
If another SNOOZE function or interrupt is also used and reception is started during any state other than STOP mode as described below, data is not received correctly and a framing error or parity error may occur.

- **After setting UWC to 1, reception is started before entering STOP mode.**
- **Reception is started during another SNOOZE mode.**
- **After returning to normal operation from STOP mode upon an interrupt or other cause, reception is started before setting UWC to 0.**

4. With USEC = 1, if an error (parity error or framing error) or change in status (detection of the expansion bit) is detected in SNOOZE mode, the flag is not set to 1 thus generating no error interrupt.

<R> **5. The CPU enters from the STOP mode to the SNOOZE mode at the falling edge of the LRxDn signal. Note that the UART frame reception in the LIN/UART module (UART mode) may not start and the CPU may keep the SNOOZE mode in case an input pulse on the LRxDn pin is too short to be detected as a start bit. In such cases, data in the next UART frame does not be received correctly, and a reception error occurs.**

Table 17-21. Baud Rate Setting for UART Reception in SNOOZE Mode
(LIN communication clock source = 32 MHz ± 2%, FRQSEL4 = 0)

UART Baud Rate (target)	Prescaler LPRS[2:0]	Baud Rate Generators 0 and 1 LBRP0 and LBRP1	Maximum Allowable Value	Minimum Allowable Value
1200 bps	1/2	828	2.45%	-2.50%
2400 bps	1/2	412	2.07%	-2.30%
4800 bps	1/2	203	1.81%	-1.42%

Table 17-22. Baud Rate Setting for UART Reception in SNOOZE Mode
(LIN communication clock source = 24 MHz ± 2%, FRQSEL4 = 0)

UART Baud Rate (target)	Prescaler LPRS[2:0]	Baud Rate Generators 0 and 1 LBRP0 and LBRP1	Maximum Allowable Value	Minimum Allowable Value
1200 bps	1/2	621	2.41%	-2.55%
2400 bps	1/2	308	2.31%	-2.08%
4800 bps	1/2	152	1.81%	-1.45%

Table 17-23. Baud Rate Setting for UART Reception in SNOOZE Mode
(LIN communication clock source = 32 MHz ± 2%, FRQSEL4 =1)

UART Baud Rate (target)	Prescaler LPRS[2:0]	Baud Rate Generators 0 and 1 LBRP0 and LBRP1	Maximum Allowable Value	Minimum Allowable Value
1200 bps	1/2	826	2.23%	-2.26%
2400 bps	1/2	410	1.65%	-1.83%

Table 17-24. Baud Rate Setting for UART Reception in SNOOZE Mode
(LIN communication clock source = 24 MHz ± 2%, FRQSEL4 =1)

UART Baud Rate (target)	Prescaler LPRS[2:0]	Baud Rate Generators 0 and 1 LBRP0 and LBRP1	Maximum Allowable Value	Minimum Allowable Value
1200 bps	1/2	619	2.28%	-2.23%
2400 bps	1/2	307	1.73%	-1.76%

Remarks 1. The maximum and minimum allowable values are applied to the baud rates for UART reception. Set the parameters so that the baud rates for UART transmission should also fall within the allowable range.

2. The receive data length is 8 bits + a parity bit.

3. The numbers in the table are for sixteen samples per bit (i.e. when NSPB[3:0] = 0000b or 1111b).

(a) SNOOZE Mode Operation (returning to normal operation upon successful reception; UWC = 1, URDCC = 0)

Figure 17-32. Timing Chart of SNOOZE Mode Operation
(returning to normal operation upon successful reception; UWC = 1, URDCC = 0)

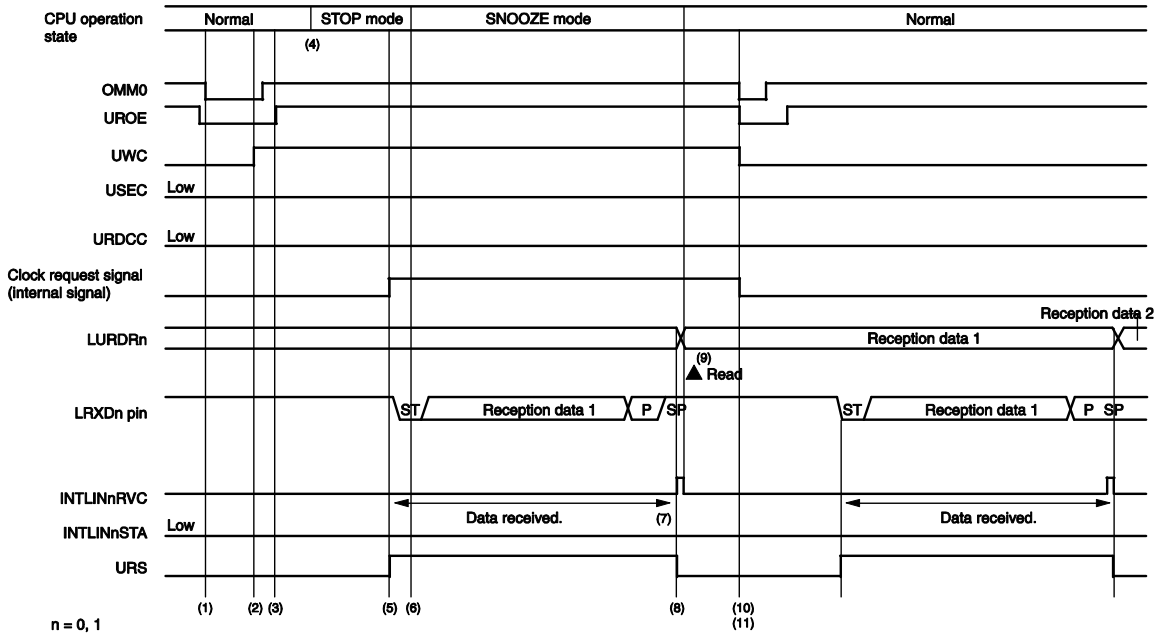

Remark (1) to (11) in Figure 17-32 correspond to (1) to (11) in Figure 17-33.

Figure 17-33. Flowchart of SNOOZE Mode Operation
(returning to normal operation upon successful reception; UWC = 1, URDCC = 0)

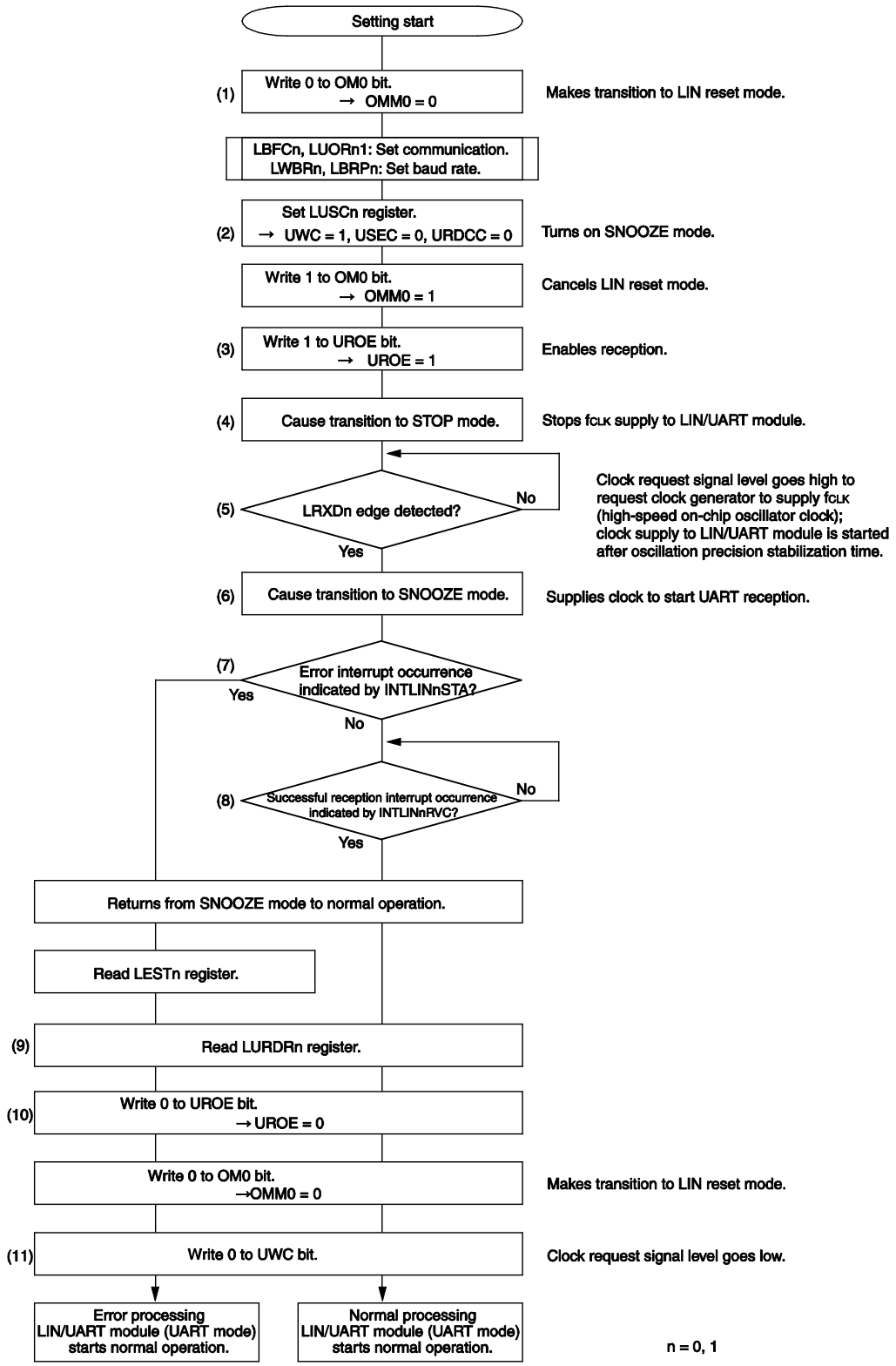

Remark (1) to (11) in Figure 17-33 correspond to (1) to (11) in Figure 17-32.

(b) SNOOZE Mode Operation (returning to normal operation upon comparison result agreement of data received; UWC = 1, URDCC = 1)

Figure 17-34. Timing Chart of SNOOZE Mode Operation
(returning to normal operation upon comparison result agreement of data received; UWC = 1, URDCC = 1)

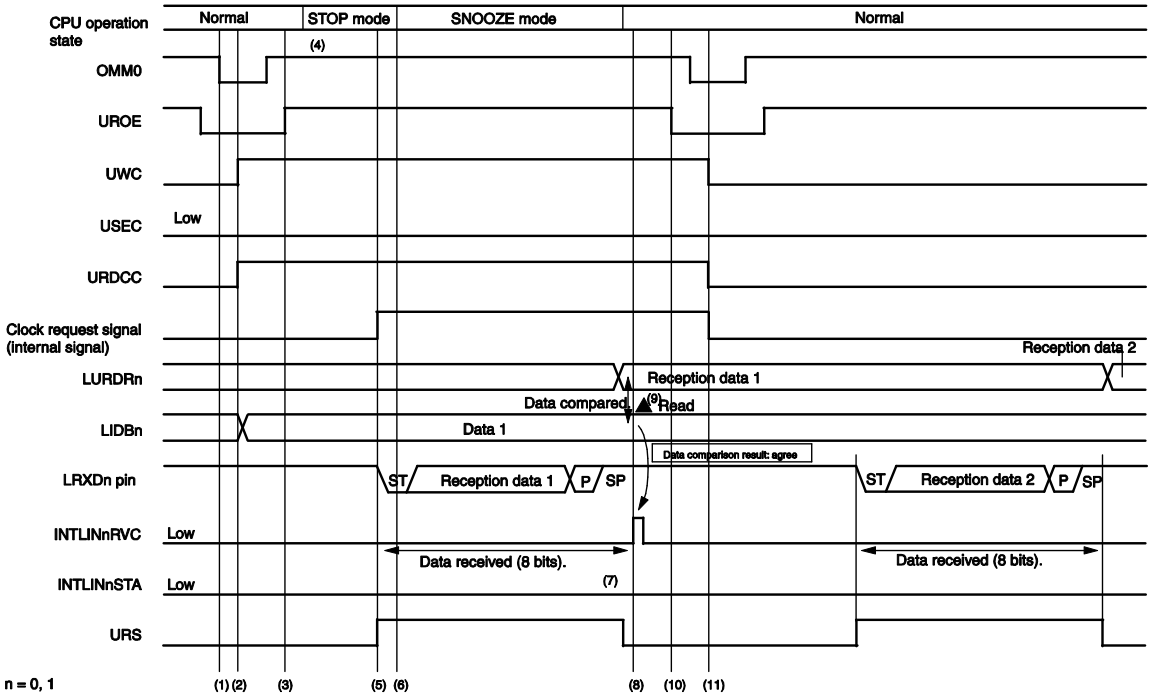

Figure 17-35. Flowchart of SNOOZE Mode Operation
(returning to normal operation upon comparison result agreement of data received; UWC = 1, URDCC = 1)

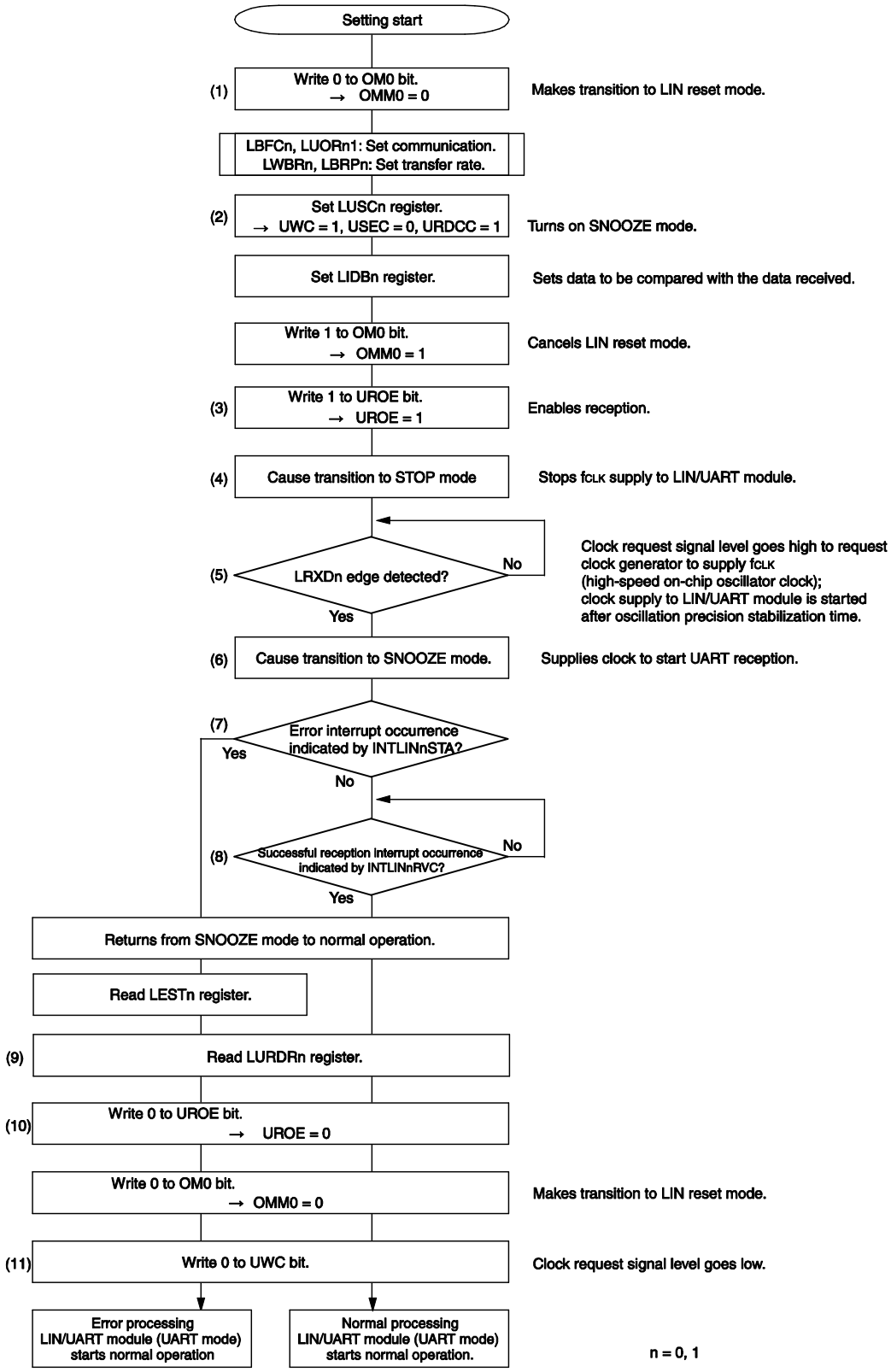

If it is necessary to set the URDCC bit in the LUSCn register to 1 (comparison of received data and LIDBn register data enabled in SNOOZE mode), only use SNOOZE mode with the UBLS bit in the LBFCn register set to 0 (UART 8-bit character communication) and UEBE bit in the LUORn1 register set to 0 (expansion bit operation disabled).

17.5.2 Data Transmission/Reception

(1) Data Transmission

One bit of data is transmitted per Tbit.
In half-duplex communication, if the BERE bit in the LEDEn register is 1 (bit error detection enabled), the transmission data and the input pin level are compared bit by bit during data transmission, and the results are stored in the BER flag in the LESTn register (see **17.5.5 Error Status**). The timing at which the input pin is sampled during data transmission can vary depending upon the settings of the LPRS[2:0] and NSPB[3:0] bits in the LWBRn register.
The bit error detection timing in UART mode is shown in Table 17-25.

Table 17-25. Error Detection Timing in UART Mode

Sampling count per bit	Bit error detection timing
6 samples	3rd clock cycle + one cycle of the prescaler clock
7 samples	4th clock cycle + one cycle of the prescaler clock
8 samples	4th clock cycle + one cycle of the prescaler clock
9 samples	5th clock cycle + one cycle of the prescaler clock
10 samples	5th clock cycle + one cycle of the prescaler clock
11 samples	6th clock cycle + one cycle of the prescaler clock
12 samples	6th clock cycle + one cycle of the prescaler clock
13 samples	7th clock cycle + one cycle of the prescaler clock
14 samples	7th clock cycle + one cycle of the prescaler clock
15 samples	8th clock cycle + one cycle of the prescaler clock
16 samples	8th clock cycle + one cycle of the prescaler clock

Figure 17-36. Example of Data Transmission Timing (when Sampling Count is 16 in 1 Tbit)

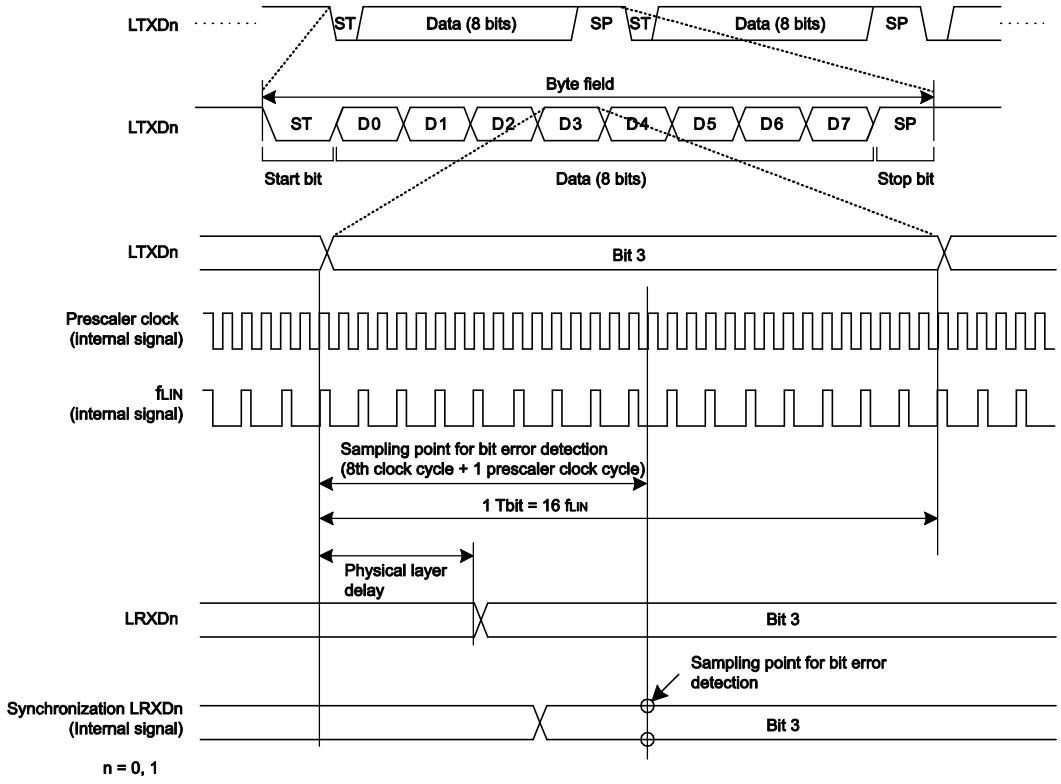

(2) Data Reception

Data reception is performed by using the synchronized LRXDn (an internal signal) that is the input from the LRXDn pin synchronized with the prescaler clock.
The byte field is synchronized at the falling edge of the start bit for the synchronized LRXDn signal. After the falling edge is detected, resampling is performed 0.5 Tbits later if the sampling count per 1 Tbit is even and {(sampling count + 1)/2}/(sampling count) Tbits later if odd. If the synchronized LRXDn signal is low, the bit is recognized as a start bit. The bit is not recognized as a start bit if the LRXDn signal is fixed at low after the reset is cleared or if a high level is detected during the resampling.
After the start bit is detected, 1 bit is sampled per Tbit.
Note that when the BERE bit in the LEDEn register is set to 1, sampling proceeds at the same time as the detection of a bit error.
The LIN/UART module has a noise filter function with respect to received data. If the LRDNFS bit in the LMDn register is 0, the noise filter is used. For a sampling value, the value determined by a 3-sampling majority rule by the prescaler clock is used. If the LRDNFS bit in the LMDn register is 1, the noise filter is not used. In this case, for a sampling value, the synchronized LRXDn value at the sampling position is used as is.

Figure 17-37 shows an example of data reception timing.

Figure 17-37. Example of Data Reception Timing (when Sampling Count is 16 in 1 Tbit)

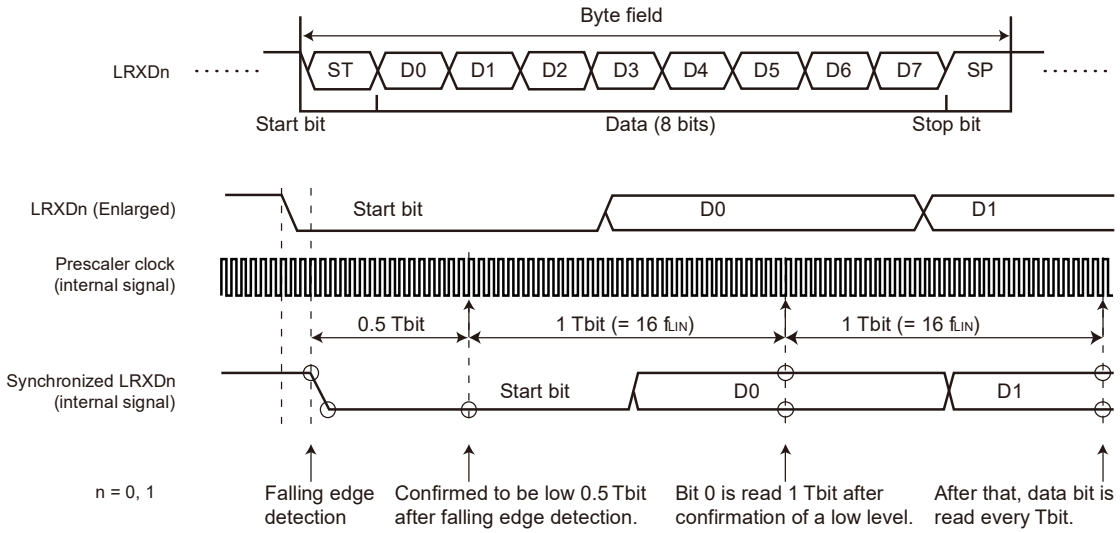

17.5.3 Buffer Processing of Transmission Data

(1) Transmission of UART Buffer

For a 9-byte transmission, the contents stored in the LUDBn0 and LDBn1 to LDBn8 registers are transmitted to data areas 0 to 8. The LUDBn0 register is used only if 9-byte transmission is set. In other cases, the LDBn1 to LDBn8 registers are selected depending upon the length of data involved. For a 4-byte transmission, the contents stored in the LDBn1 to LDBn4 registers are transmitted to data areas 1 to 4, but the contents of the LDBn5 to LDBn8 registers are not transmitted. A LINn transmission interrupt is generated after the transmission of the data that is set in the MDL[3:0] bits in the LDFCn register (n = 0, 1). The spaces between transmission data items can be set in the IBS bit in the LSCn register.
Figure 17-38 shows a 9-byte UART buffer and the transmission processing.

Figure 17-38. UART Buffer and Transmission Processing (for 9-Byte Transmission)

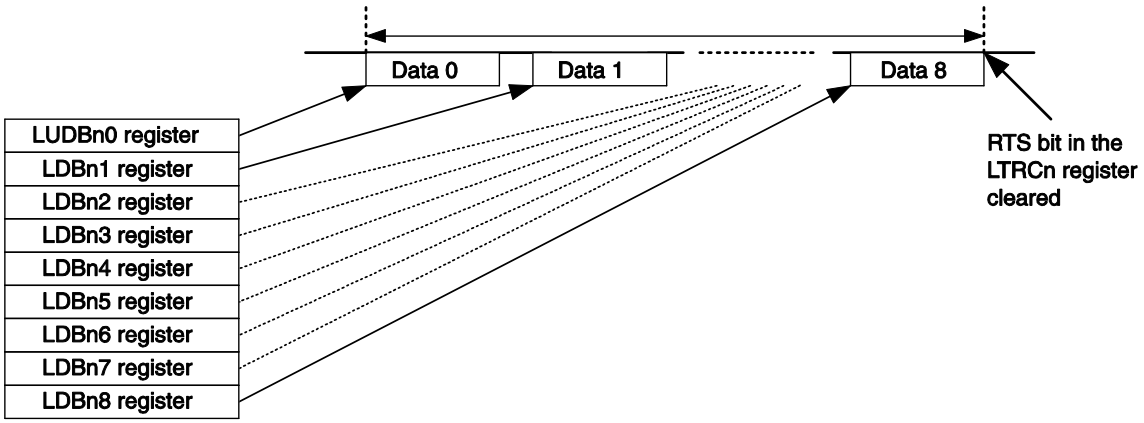

17.5.4 Status

In UART mode, the LIN/UART module can detect five types of statuses.
Two statuses, successful UART buffer transmission and error detection, can generate interrupt requests.
Table 17-26 shows the types of statuses available in UART mode.

Table 17-26. Types of Statuses in UART Mode

Status	Status set condition	Status clear condition	Corresponding bit	Interrupt
Reset	After the OM0 bit in the LCUCn register is set to not-LIN–reset-mode, if actually the LIN/UART module is cleared from LIN reset mode.	After the OM0 bit in the LCUCn register is set to LIN reset mode, if actually the LIN/UART module enters LIN reset mode.	OMM0 bit in LMSTn register	Not available
Successful UART buffer transmission	• The transmission of the last data of data equal to the length set in the MDL bits in the LDFCn register is started while the UTIGTS bit in the LUORn1 register is 0 (transmission interrupt is generated at the start of transmission). • The transmission of data equal to the length set in the MDL bits in the LDFCn register is completed while the UTIGTS bit in the LUORn1 register is 1 (transmission interrupt is generated at the completion of transmission).	• When cleared by software • After transition to LIN reset mode	FTC flag in LSTn register	Available
Error detection	If any of the UPER flag, IDMT flag, EXBT flag, FER flag, OER flag, and BER flags in the LESTn register turns 1 (error detected).	• When cleared by software[Note] • After transition to LIN reset mode	ERR flag in LSTn register	Available
Transmission status	• When data is written to the LUTDRn or LUWTDRn register. • When a 1 is written to the RTS bit in the LTRCn register.	• The transmission of the data set in the LUTDRn or LUWTDRn register is complete, but another transmission data item is not set • The transmission of the data in the UART buffer is complete, and the RTS bit in the LTRCn register is cleared • After transition to LIN reset mode	UTS flag in LSTn register	Not available
Reception status	• When a start bit is detected.	• When a sampling point for stop bits is detected • After transition to LIN reset mode	URS flag in LSTn register	Not available

Note Writing a 0 to the UPER, IDMT, EXBT, FET, OER, and BER flags in the LESTn register when the LIN reset mode is being canceled turns the ERR flag in the LSTn register to 0.

17.5.5 Error Status

In UART mode, the LIN/UART module can detect four types of errors and two types of statuses. The condition of these error statuses can be checked by means of the corresponding bits in the LESTn register.
Table 17-27 lists applicable error status types.

Table 17-27. Types of Error Statuses in UART Mode

Status	Error detection condition	Communication	Enable/disable detection	Corresponding bit
Bit error	The transmitted data and the data monitored on the receive pin do not match Note 1	Continues until the transmission of the set transmission data is finished.	O	BER flag in LESTn register
Overrun error	After received data is stored in the LURDRn register, another data item is received before the data is read. (In this case, no data is stored in the LURDRn register).	— (Reception is finished by the time this error is detected)	O	OER flag in LESTn register
Framing error	When the first stop bit at the first bit is low in the reception processing.	— (Reception is finished by the time this error is detected)	O	FER flag in LESTn register
Parity error	The received parity value fails to match the parity value calculated from the received data	Continues until the data reception is finished.	× Note 2	UPER flag in LESTn register
Expansion bit detection	The value of the received expansion bit matches the value of the UEBDL bit in the LUORn1 register.	—	O	EXBT flag in LESTn register
ID match	The value of the received expansion bit matches the value of the UEBDL bit in the LUORn1 register and the 8-bit received data excluding the expansion bit matches the value of the LIDBn register.	—	O	IDMT flag in LESTn register

Notes 1. If data is transmitted from the UART buffer, a bit error is also detected in the space between UART frames (inter-byte space).

2. Setting the UPS[1:0] bits in the LBFCn register to 10b (0 parity) disables the checking of parity bit values. In this case, no parity error is generated.

Caution The error status is cleared when cleared by software or after transition to LIN reset mode.

17.6 LIN Self-Test Mode

The LIN/UART module has a LIN self-test mode. When LIN self-testing is turned on, the LTXDn and LRXDn signals are disconnected from the external pins and connected within the LIN/UART module. Frames transferred from the internal LTXDn terminal loop back to the internal LRXDn terminal. The LIN self-test mode is exclusively for testing LIN mode operation.
The following four types of tests are available:

- LIN master self-test mode (transmission): header transmission and response transmission
- LIN master self-test mode (reception): header transmission and response reception
- LIN slave self-test mode (transmission): header reception and response transmission
- LIN slave self-test mode (reception): header reception and response reception

<R> In the LIN self-test mode, the LIN/UART module operates at the highest baud rate regardless of the setting of the baud rate generator. The baud rate is <frequency of the LIN communications clock source>/16 bps regardless of the settings of the baud rate related registers (the NSPB bit in the LWBRn register must be set to 0000b or 1111b, and the LPRS bit of the LWBRn register must be set to 000b).
In the LIN self-test mode, the following functions are not supported. Do not use these functions.

- LIN wake-up mode
- Frame separate mode
- Multi-byte response reception and transmission
- LIN slave mode [auto baud rate]
- Frame/response timeout error

Figure 17-39. Connection in LIN Reset Mode, LIN Mode and UART Mode

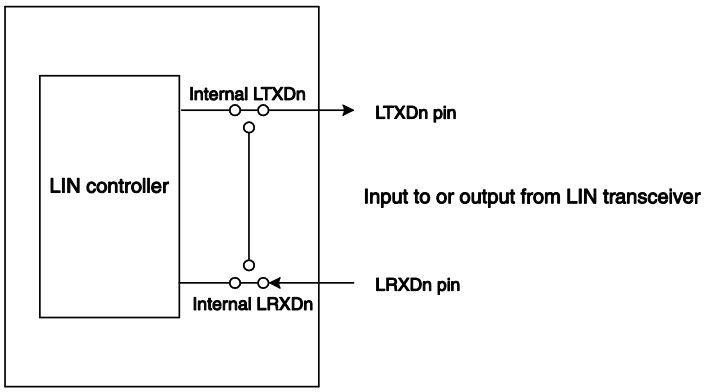

Figure 17-40. Connection in LIN Self-Test Mode

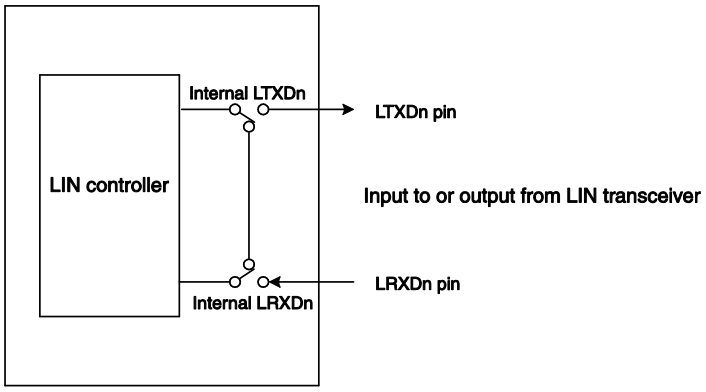

17.6.1 Change to LIN Self-Test Mode

LIN self-test mode is entered by writing to the LSTCn register.
The transition to LIN self-test mode can be confirmed when the LSTM bit in the LSTCn register becomes 1.
When changing to LIN self-test mode, be sure to execute a specific sequence. In that sequence, information must be written three times consecutively to the LIN self-test control register, as follows:

- Change to LIN reset mode
  Set the OM0 bit in the LCUCn register to 0 (LIN reset mode).
  Read the OMM0 bit in the LMSTn register; verify that it is 0 (LIN reset mode).
- Select a LIN mode
  LMD bits in LMDn register = 00b (LIN master mode) or 11b (LIN slave mode [fixed baud rate])
- 1st write: LSTCn register = 1010 0111b (A7H)
- 2nd write: LSTCn register = 0101 1000b (58H)
- 3rd write: LSTCn register = 0000 0001b (01H)
- Verify the transition to LIN self-test mode

  Read the LSTM bit in the LSTCn register; verify that it is 1 (LIN self-test mode).

If the key of the first write (A7H) is written twice by mistake, the transition to LIN self-test mode is canceled. The above sequence should be retried from the step of first write. In addition, if a write to another LIN-related register is performed during transition to LIN self-test mode (three consecutive write operations to the LSTCn register), the transition is also canceled.

17.6.2 Transmission in LIN Master Self-Test Mode

To execute a self-test on LIN master transmission, perform the procedure below:

- Set registers related to the baud rate, noise filter, and interrupt output.
  <R> LWBRn register = 0000000xb
  LBRPn0 register = xxxxxxxxb[Note 1]
  LBRPn1 register = xxxxxxxxb[Note 1]
  LMDn register = 00xxxx00b[Note 1, 3]
- Set registers related to interrupt enabling and error enabling.
  LIEn register = 0000xxxxb[Note 2, 3]
  LEDEn register = x000x0xxb
- Set registers related to the break field and spaces.
  LBFCn register = 00xxxxxxb
  LSCn register = 00xx0xxxb
- Cancel the reset.
  Write 11b to the OM1 and OM0 bits in the LCUCn register and verify that the OMM1 and OMM0 bits in the LMSTn register become 11b.
- Set registers related to the transmission frame.
  LDFCn register = 00x1xxxxb
  LIDBn register = xxxxxxxxb
  LDBn1 to LDBn8 registers = xxxxxxxxb
- Start header transmission followed with response transmission
  LDFCn register = 00x1xxxxb
  Set the FTS bit in the LTRCn register to 1 (frame transmission or wake-up transmission/reception started).

The LIN master self-test mode (transmission) is executed. In this mode, interrupts are generated, and status and error status are also updated appropriately. The checksum is automatically computed by the LIN/UART module.
When the execution of LIN master self-test mode (transmission) is aborted, set OM0 bit of LCUCn register to 0 (LIN reset mode).

- When the transmission is completed, the reversed value of the looped-back frame data is stored in the LIDBn, LDBnm (m = 1 to 8), and LCBRn registers (the data is reversed before being stored because the transmitted value should be compared with the looped-back value). The FTS bit in the LTRCn register is cleared.
- If the transmission fails to complete due to an error, the applicable error flag is set and the FTS bit in the LTRCn register is cleared.

Notes 1. The following register settings do not affect the operations in LIN self-test mode. Therefore, setting them is not mandatory.
<R> LBRPn0 register, LBRPn1 register, and LCKS bits in LMDn register

2. As necessary, set the related registers in **CHAPTER 21 INTERRUPT FUNCTIONS**.

3. When the successful header transmission interrupt and successful frame transmission interrupt are used in the same interrupt, the SHIE bit in the LIEn register should not be set to 1 (successful header transmission interrupt enabled) if the software processing of the successful header transmission interrupt does not complete before the successful frame transmission interrupt is generated.
The period starting from when the successful header transmission flag is set until the successful frame/wake-up transmission flag is set can be calculated as follows:

$$10 \times (\text{number of data bytes} + 1)\ [\text{Tbit}]$$

$$1\ \text{Tbit} = \text{LIN communication clock source} \times 16$$

Remark x: Any desired value

17.6.3 Reception in LIN Master Self-Test Mode

To execute a self-test on LIN master reception, perform the procedure below:

- Set registers related to the baud rate, noise filter, and interrupt output.
  <R> LWBRn register = 0000000xb
  LBRPn0 register = xxxxxxxxb[Note 1]
  LBRPn1 register = xxxxxxxxb[Note 1]
  LMDn register = 00xxxx00b[Note 1, 3]
- Set registers related to interrupt enabling and error enabling.
  LIEn register = 0000xxxxb[Note 2, 3]
  LEDEn register = x000x0xxb
- Set registers related to the break field and spaces.
  LBFCn register = 00xxxxxxb
  LSCn register = 00xx0xxxb[Note 1]
- Cancel the reset.
  Write 11b to the OM1 and OM0 bits in the LCUCn register and verify that the OMM1 and OMM0 bits in the LMSTn register become 11b.
- Set registers related to the reception frame.
  LDFCn register = 00x0xxxxb
  LIDBn register = xxxxxxxxb
  LDBn1 to LDBn8 registers = xxxxxxxxb
  LCBRn register = xxxxxxxxb

Since the checksum is not computed automatically, store a computed value. By intentionally setting an incorrect computation result as the checksum, a test for checksum errors can be performed.

- Start header transmission followed with response reception
  Set the FTS bit in the LTRCn register to 1 (frame transmission or wake-up transmission/reception started).

The LIN master self-test mode (reception) is executed. In this mode, interrupts are generated, and status and error status are also updated appropriately. When the execution of LIN master self-test mode (reception) is aborted, set OM0 bit of LCUCn register to 0 (LIN reset mode).

- When the reception is completed, the reversed value of the looped-back frame data is stored in the LIDBn, LDBnm (m = 1 to 8), and LCBRn registers (the data is reversed before being stored because the set value should be compared with the looped-back and received value). The FTS bit in the LTRCn register is cleared.
- If the reception fails to complete due to an error, the applicable error flag is set and the FTS bit in the LTRCn register is cleared.

Notes 1. The following register settings do not affect the operations in LIN self-test mode. Therefore, setting them is not mandatory.
<R> LBRPn0 register, LBRPn1 register, LCKS bits in LMDn register, and IBS bits in LSCn register

2. As necessary, set the related registers in **CHAPTER 21 INTERRUPT FUNCTIONS**.

3. When the successful header transmission interrupt and successful frame transmission interrupt are used in the same interrupt, the SHIE bit in the LIEn register should not be set to 1 (successful header transmission interrupt enabled) if the software processing of the successful header transmission interrupt does not complete before the successful frame transmission interrupt is generated.
The period starting from when the successful header transmission flag is set until the successful frame/wake-up transmission flag is set can be calculated as follows:

$$10 \times (\text{number of data bytes} + 1)\ [\text{Tbit}]$$

$$1\ \text{Tbit} = \text{LIN communication clock source} \times 16.$$

Remark x: Any desired value

17.6.4 Transmission in LIN Slave Self-Test Mode

To execute a self-test on LIN slave transmission, perform the procedure below:

- Set registers related to the baud rate, noise filter, and interrupt output.
  <R> LWBRn register = 0000000xb
  LBRPn0 register = xxxxxxxxb[Note 1]
  LBRPn1 register = xxxxxxxxb[Note 1]
  LMDn register = 00xx0011b [Note 4]
- Set registers related to interrupt enabling and error enabling.
  LIEn register = 0000xxxxb[Note 2, 4]
  LEDEn register = xx0xx00xb
- Set registers related to the break field and spaces.
  LBFCn register = 0000000xb[Note 3]
  LSCn register = 00xx0001b
- Cancel the reset.
  Write 11b to the OM1 and OM0 bits in the LCUCn register and verify that the OMM1 and OMM0 bits in the LMSTn register become 11b.
- Set registers related to the transmission frame.
  LDFCn register = 00x1xxxxb
  LIDBn register = xxxxxxxxb
  LDBn1 to LDBn8 registers = xxxxxxxxb
- Start header reception followed with response transmission
  Set the FTS bit in the LTRCn register to 1 (header reception or wake-up transmission/reception started).
  (Without any operation involving the RTS bit in the LTRCn register, the reception of a header and the transmission of a response are executed, in the indicated order.)

The LIN slave self-test mode (transmission) is executed. In this mode, interrupts are generated, and status and error status are also updated appropriately. The checksum is automatically computed by the LIN/UART module.
When the execution of LIN master self-test mode (transmission) is aborted, set OM0 bit of LCUCn register to 0 (LIN reset mode).

- When the transmission is completed, the reversed value of the looped-back frame data is stored in the LIDBn, LDBnm (m = 1 to 8), and LCBRn registers (the data is reversed before being stored because the transmitted value should be compared with the looped-back value). The FTS bit in the LTRCn register is cleared.
- If the transmission fails to complete due to an error, the applicable error flag is set and the FTS bit in the LTRCn register is cleared.

Notes 1. The following register settings do not affect the operations in LIN self-test mode. Therefore, setting them is not mandatory.
<R> LBRPn0 register, and LBRPn1 register

2. As necessary, set the related registers in **CHAPTER 21 INTERRUPT FUNCTIONS**.

3. A break with a width of 9.5 or 10.5 Tbits is output from the internal LTXDn pin depending on this register setting.

4. When the successful header reception interrupt and successful response transmission interrupt are used in the same interrupt, the SHIE bit in the LIEn register should not be set to 1 (successful header reception interrupt enabled) if the software processing of the successful header reception interrupt does not complete before the successful response transmission interrupt is generated.
The period starting from when the successful header reception flag is set until the successful response/wake-up transmission flag is set can be calculated as follows:

$10 \times$ (number of data bytes + 1) [Tbit]

1 Tbit = LIN communication clock source $\times$ 16.

Remark x: Any desired value

17.6.5 Reception in LIN Slave Self-Test Mode

To execute a self-test on LIN slave reception, perform the procedure below:

- Set registers related to the baud rate, noise filter, and interrupt output.
  <R> LWBRn register = 0000000xb
  LBRPn0 register = xxxxxxxxb[Note 1]
  LBRPn1 register = xxxxxxxxb[Note 1]
  LMDn register = 00xx0011b [Note 4]
- Set registers related to interrupt enabling and error enabling.
  LIEn register = 0000xxxxb[Note 2, 4]
  LEDEn register = xx0xx00xb
- Set registers related to the break field and spaces.
  LBFCn register = 0000000xb[Note 3]
  LSCn register = 00xx0001b[Note 1]
- Cancel the reset.
  Write 11b to the OM1 and OM0 bits in the LCUCn register and verify that the OMM1 and OMM0 bits in the LMSTn register become 11b.
- Set registers related to the reception frame.
  LDFCn register = 00x0xxxxb
  LIDBn register = xxxxxxxxb
  LDBn1 to LDBn8 registers = xxxxxxxxb
  LCBRn register = xxxxxxxxb

Since the checksum is not computed automatically, store a computed value. By intentionally setting an incorrect computation result as the checksum, a test for checksum errors can be performed.

- Start header reception followed with response reception
  Set the FTS bit in the LTRCn register to 1 (header reception or wake-up transmission/reception started).
  (Without any operation involving the RTS bit in the LTRCn register, the reception of a header and the reception of a response are executed, in the indicated order.)

The LIN slave self-test mode (reception) is executed. In this mode, interrupts are generated, and status and error status are also updated appropriately. When the execution of LIN master self-test mode (reception) is aborted, set OM0 bit of LCUCn register to 0 (LIN reset mode).

- When the reception is completed, the reversed value of the looped-back frame data is stored in the LIDBn, LDBnm (m = 1 to 8), and LCBRn registers (the data is reversed before being stored because the set value should be compared with the looped-back and received value). The FTS bit in the LTRCn register is cleared.
- If the reception fails to complete due to an error, the applicable error flag is set and the FTS bit in the LTRCn register is cleared.

Notes 1. The following register settings do not affect the operations in LIN self-test mode. Therefore, setting them is not mandatory.
<R> LBRPn0 register, LBRPn1 register, and IBS bits in LSCn register

2. As necessary, set the related registers in **CHAPTER 21 INTERRUPT FUNCTIONS**.

3. A break with a width of 9.5 or 10.5 Tbits is output from the internal LTXDn pin depending on this register setting.

4. When the successful header reception interrupt and successful response reception interrupt are used in the same interrupt, the SHIE bit in the LIEn register should not be set to 1 (successful header reception interrupt enabled) if the software processing of the successful header reception interrupt does not complete before the successful response reception interrupt is generated.
The period starting from when the successful header reception flag is set until the successful response/wake-up reception flag is set can be calculated as follows:

$$10 \times (\text{number of data bytes} + 1)\ [\text{Tbit}]$$

$$1\ \text{Tbit} = \text{LIN communication clock source} \times 16$$

Remark x: Any desired value

17.6.6 Terminating LIN Self-Test Mode

To terminate LIN self-test mode, perform the procedure below:

- Write 0 (LIN reset mode) to the OM0 bit in the LCUCn register.
  If the OMM1 and OMM0 bits in the LMSTn register are not 11b, write 11b to the OM1 and OM0 bits in the LCUCn register. After confirming that the OMM1 and OMM0 bits in the LMSTn register have turned 11b, change to LIN reset mode.
- Verify the cancellation of LIN self-test mode.
  Read the LSTM bit in the LSTCn register; confirm that it is not 0 (not in LIN self-test)
- Verify the transition to LIN reset mode.
  Read the OMM0 bit in the LMSTn register; verify that it is 0 (LIN reset mode).

17.7 Baud Rate Generator

The prescaler clock is obtained by frequency-dividing the LIN communication clock source by the prescaler, and the LIN system clock (f_{LIN}) is obtained by frequency-dividing the prescaler clock by the baud rate generator. The clock obtained by frequency-dividing the LIN system clock (f_{LIN}) by the number of samples is the baud rate. The reciprocal of this baud rate is called the bit time (Tbit).

The LIN/UART module has two kinds of baud rate generators. The baud rate generators switch over according to the mode used.

17.7.1 LIN Master Mode

Figure 17-41 shows a block diagram of baud rate generation in LIN master mode.

Figure 17-41. Block Diagram of Baud Rate Generation in LIN Master Mode

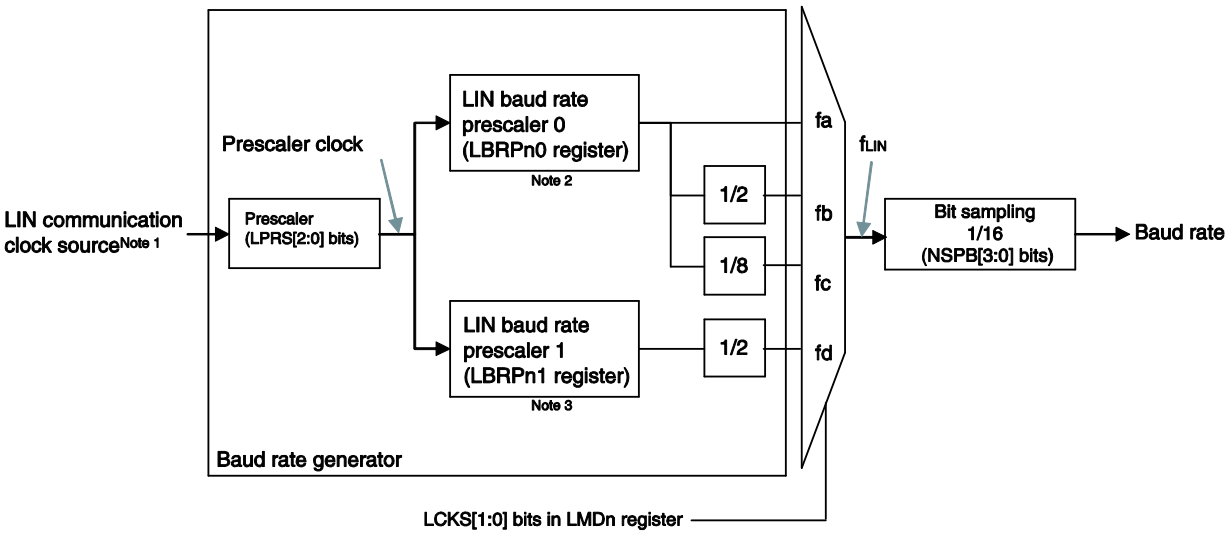

Notes 1. For the LIN communication clock source, refer to CHAPTER 5 CLOCK GENERATOR.
2. When the value in the LBRPn0 register is N (N = 0 to 255), the clock frequency is divided by N+1.
3. When the value in the LBRPn1 register is M (M = 0 to 255), the clock frequency is divided by M+1.

Set the LIN communications clock source as follows.

- LIN communications clock source = f_{CLK}[Note 1]
- In the range from 4 MHz to 32 MHz

Note 1. When the timeout error detection is not used, the f_{MX} clock is selectable as the LIN communication clock source. In that case, set at least 1.2 times the frequency of the LIN communication clock source to the CPU/peripheral hardware clock(f_{CLK}).

By setting the LBRPn0 register so that fa is 307200 Hz (= 19200 × 16), the resulting bit rates are fa = 19200 × 16, fb = 9600 × 16 and fc = 2400 × 16. These bit rates are frequency-divided by 16 in the bit timing generator, enabling bit rates of 19200 bps, 9600 bps and 2400 bps to be generated. Also, by setting the LBRPn1 register so that fd is 166672 Hz (= 10417 × 16), the resulting bit rate is fd = 10417 × 16. This bit rate is frequency-divided by 16 in the bit timing generator, enabling 10417 bps to be generated.

Table 17-28 shows examples of baud rate (19200, 10417, 9600, and 2400 bps) generation for each LIN communication clock source frequency, and also the corresponding errors.

Table 17-28. Examples of Baud Rate (19200, 10417, 9600, and 2400 bps) Generation in LIN Master Mode

LIN communication clock source	Prescaler	Baud rate generator 0 N+1 frequency-divided	Baud rate generator 1 M+1 frequency-divided	LIN system clock	Baud rate	Error
32 MHz	1/1	104	—	fa	19230.77	+0.16%
		—	96	fd	10416.67	-0.003%
		104	—	fb	9615.38	+0.16%
		104	—	fc	2403.85	+0.16%
24 MHz	1/1	78	—	fa	19230.77	+0.16%
		—	72	fd	10416.67	-0.003%
		78	—	fb	9615.38	+0.16%
		78	—	fc	2403.85	+0.16%
16 MHz	1/1	52	—	fa	19230.77	+0.16%
		—	48	fd	10416.67	-0.003%
		52	—	fb	9615.38	+0.16%
		52	—	fc	2403.85	+0.16%
12 MHz	1/1	39	—	fa	19230.77	+0.16%
		—	36	fd	10416.67	-0.003%
		39	—	fb	9615.38	+0.16%
		39	—	fc	2403.85	+0.16%
8 MHz	1/1	26	—	fa	19230.77	+0.16%
		—	24	fd	10416.67	-0.003%
		26	—	fb	9615.38	+0.16%
		26	—	fc	2403.85	+0.16%

Remark The numbers in the table are for sixteen samples per bit (i.e. when NSPB[3:0] = 0000b or 1111b).

17.7.2 LIN Slave Mode

Figure 17-42 shows a block diagram of baud rate generation in LIN slave mode.

Figure 17-42. Block Diagram of Baud Rate Generation in LIN Slave Mode

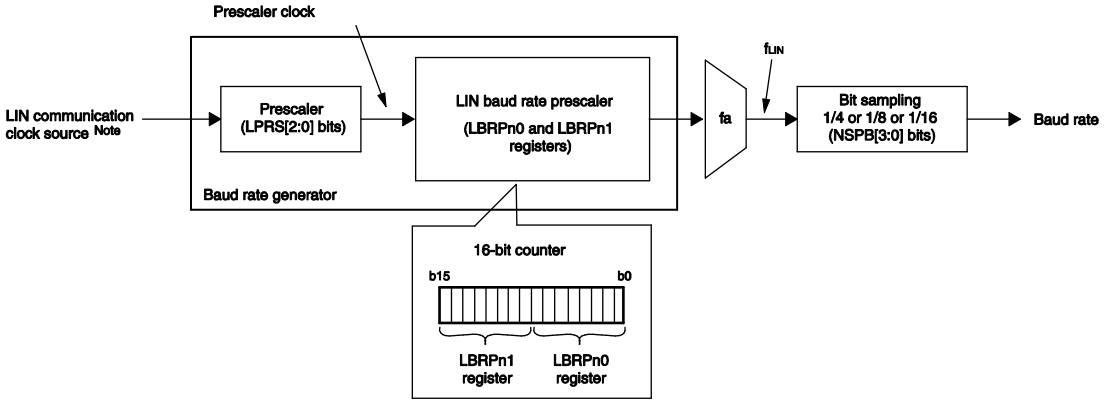

Note For the LIN communication clock source, refer to CHAPTER 5 CLOCK GENERATOR.

Set the LIN communications clock source as follows.

- LIN communications clock source = f_{CLK} Note1
- In the range from 4 MHz to 32 MHz

Note 1. When the timeout error detection is not used, the f_{MX} clock is selectable as the LIN communication clock source. In that case, set at least 1.2 times the frequency of the LIN communication clock source to the CPU/peripheral hardware clock(f_{CLK}).

In LIN slave mode [Auto Baud Rate], operation is possible with the baud rates from 1 kbps to 20 kbps. Set the prescaler clock according to the target baud rate so that its frequency is the corresponding value from the list.

[Target baud rate]	[Frequency of prescaler clock]
1 kbps to 20 kbps:	4 MHz Note
1 kbps to less than 2.4 kbps:	4 MHz
2.4 kbps to 20 kbps:	8 MHz to 12 MHz

Note Set the NSPB[3:0] bits in the LWBRn register to 0011b (4 sampling).

Table 17-29 shows the examples of baud rate (19200, 10417, 9600, and 2400 bps) generation for each LIN communication clock source frequency in LIN slave mode [fixed baud rate] and errors.

Table 17-29. Examples of Baud Rate Generation (19200 bps, 10417 bps, 9600 bps and 2400 bps) in LIN Slave Mode [Fixed Baud Rate]

LIN communication clock source	Prescaler	Baud rate generator 0-1 N+1 frequency-divided	Baud rate	Error
32 MHz	1/1	104	19230.77	+0.16%
		192	10416.67	-0.003%
		208	9615.38	+0.16%
		833	2400.96	+0.04%
24 MHz	1/1	78	19230.77	+0.16%
		144	10416.67	-0.003%
		156	9615.38	+0.16%
		625	2400	0%
16 MHz	1/1	52	19230.77	+0.16%
		96	10416.67	-0.003%
		104	9615.38	+0.16%
		417	2398.08	-0.08%
12 MHz	1/1	39	19230.77	+0.16%
		72	10416.67	-0.003%
		78	9615.38	+0.16%
		313	2396.17	-0.16%
8 MHz	1/1	26	19230.77	+0.16%
		48	10416.67	-0.003%
		52	9615.38	+0.16%
		208	2403.85	+0.16%

Remark The numbers in the table are for sixteen samples per bit (i.e. when NSPB[3:0] = 0000b or 1111b).

17.7.3 UART Mode

Figure 17-43 shows a block diagram of baud rate generation in UART mode.

Figure 17-43. Block Diagram of Baud Rate Generation in UART Mode

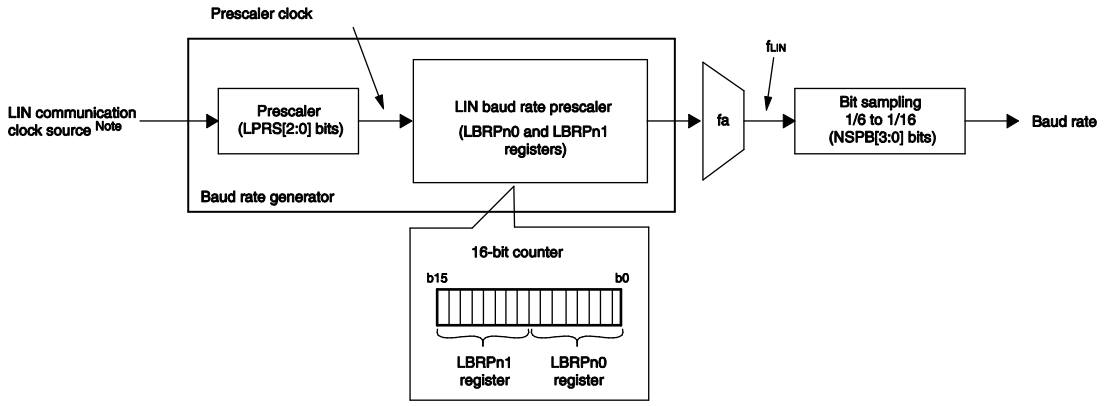

Note For the LIN communication clock source, refer to CHAPTER 5 CLOCK GENERATOR.

Set the LIN communications clock source as follows.

- LIN communications clock source = f_{CLK}[Note1]
- In the range from 4 MHz to 32 MHz

Note 1. It is available to select the f_{MX} to the LIN communications clock source. In that case, set at least 1.2 times the frequency of the LIN communication clock source to the CPU/peripheral hardware clock(f_{CLK}).

Table 17-30. UART Baud Rate Setting Examples (when LIN communication clock source = 32 MHz)

UART Baud Rate (Target Baud Rate)	Prescaler	Baud rate generator 0-1 N+1 frequency-divided	Baud rate	Error
1200 bps	1/2	833	1200.48	+0.04%
2400 bps	1/2	417	2398.08	-0.08%
4800 bps	1/2	208	4807.69	+0.16%
9600 bps	1/2	104	9615.38	+0.16%
19200 bps	1/2	52	19230.77	+0.16%
31250 bps	1/2	32	31250.00	0.00%
38400 bps	1/2	26	38461.54	+0.16%

Remarks 1. These examples are for sixteen samples per bit (i.e. when NSPB[3:0] = 0000b or 1111b).

2. The baud rate can be calculated by the following expression.

Baud rate = (LIN communications clock source (f_{CLK} or f_{MX}: selected by the LINnMCK bits) frequency)
× (frequency divider selected by LPRS[2:0] ÷ (LBRPn0 + (0x0100 × LBRPn1) + 1))
÷ number selected by NSPB[3:0] bps

17.8 Noise Filter

The LIN/UART module has a noise filter for reducing erroneous receiving of data due to noise. By setting the LRDNFS bit in the LMDn register to 0 (to use the noise filter), the noise filter is activated. The noise filter samples the level of the synchronized LRXDn (n = 0, 1) based on the prescaler clock, and outputs the majority among three sampled levels. The value of each bit in the received data is determined by the noise filter output.

Figure 17-44 shows the configuration of the noise filter, figure 17-45 an example of a noise filter circuit, and figure 17-46 the determination of the received data when the noise filter is used.

Figure 17-44. Configuration of Noise Filter

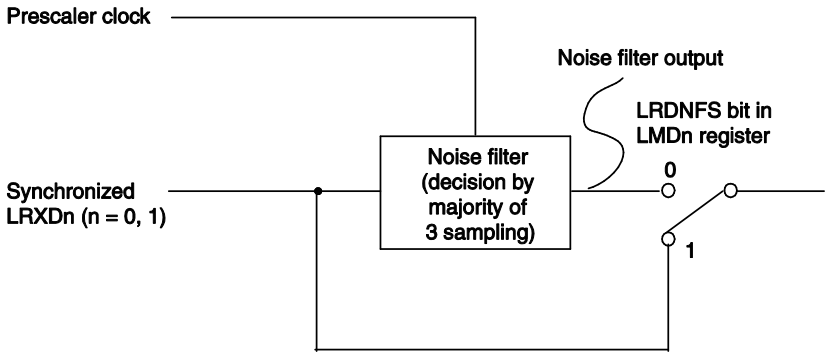

Figure 17-45. Example of Noise Filter Circuit

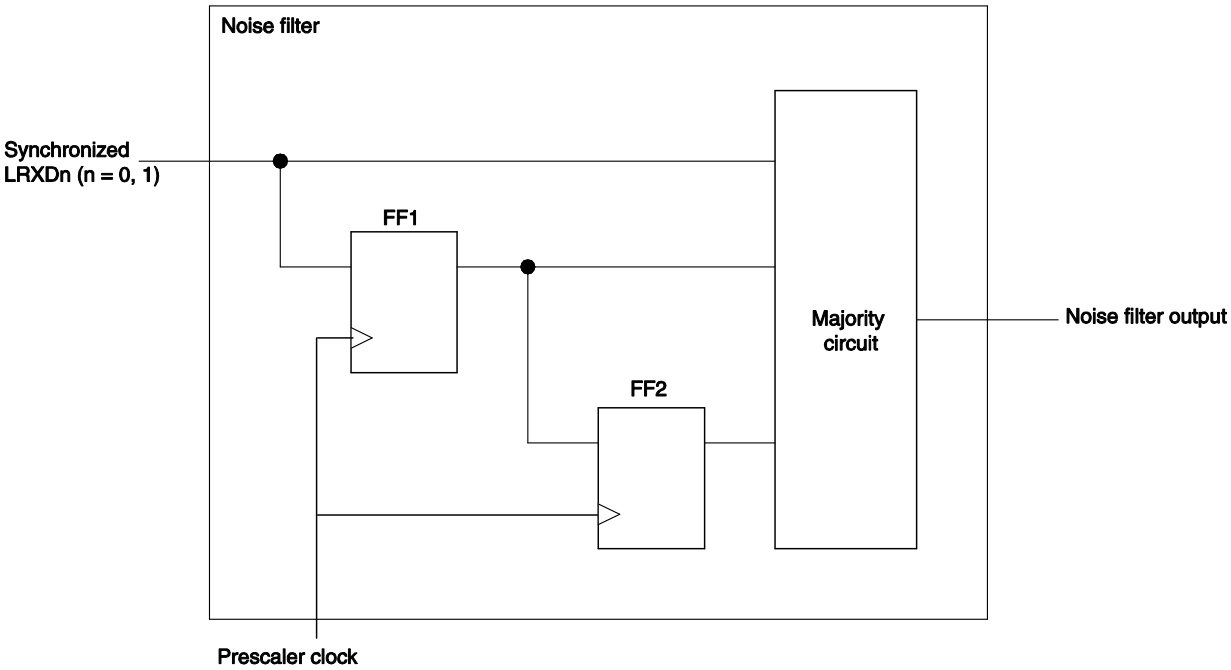

Figure 17-46. Determination of Received Data when Noise Filter is Used

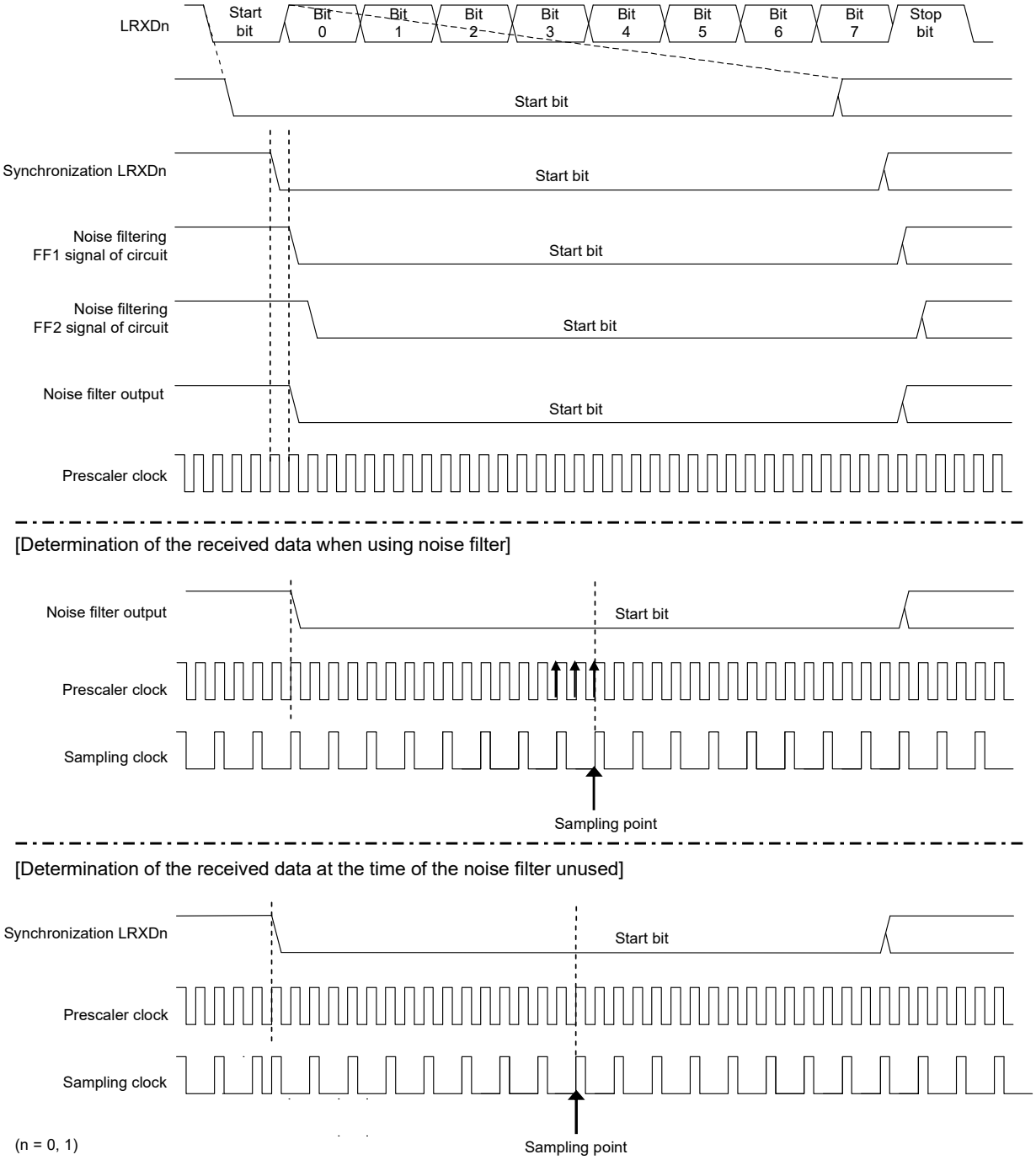

(n = 0, 1)

17.9 Interrupts

The LIN/UART module generates four types of interrupt requests.

- LINn successful transmission interrupt
- LINn successful reception interrupt
- LINn reception status interrupt
- LINn interrupt

Setting the LIOS bit in the LMDn register to 0 allows to perform logical OR operation on all of the interrupt sources, outputting the interrupt request from the LINn interrupt.
Setting the LIOS bit in the LMDn register to 1 allows to output the LINn successful transmission interrupt, LINn successful reception interrupt, or LINn reception status interrupt depending on the interrupt sources.
Table 17-31 lists the sources for each interrupt.

Table 17-31. Interrupt Sources

Mode		LIOS bit in LMDn register is 0	LIOS bit in LMDn register is 1 Note		
		LINn Interrupt	LINn Successful Transmission Interrupt	LINn Successful Reception Interrupt	LINn Reception Status Interrupt
LIN mode	LIN master mode	• Successful frame transmission • Successful frame reception • Successful wake-up transmission • Successful wake-up reception • Successful header transmission • Bit error • Physical bus error • Frame/response timeout error • Framing error • Checksum error • Response preparation error	• Successful frame transmission • Successful wake-up transmission • Successful header transmission	• Successful frame reception • Successful wake-up reception	• Bit error • Physical bus error • Frame/response timeout error • Framing error • Checksum error • Response preparation error
	LIN slave mode	• Successful response transmission • Successful response reception • Successful wake-up transmission • Successful wake-up reception • Successful header reception • Bit error • Frame/response timeout error • Framing error • Sync field error • Checksum error • ID parity error • Response preparation error	• Successful response transmission • Successful wake-up transmission	• Successful response reception • Successful wake-up reception • Successful header reception	• Bit error • Frame/response timeout error • Framing error • Sync field error • Checksum error • ID parity error • Response preparation error
UART mode		—	• Transmission start/successful transmission	• Successful reception • Expansion bit mismatch	• Bit error • Overrun error • Framing error • Expansion bit detection • ID match • Parity error

Note LIOS bit setting is enabled in LIN mode. LIOS bit setting is not required in UART mode.

Each interrupt request is output when the corresponding bit in the LIEn register is 1 (interrupt is enabled) and the corresponding flag in the LSTn register is 1.

In the RL78/F13 and RL78/F14, the LINn reception status interrupt and LINn interrupt are assigned to the same interrupt vector.

CHAPTER 18 CAN INTERFACE (RS-CAN LITE)

The number of channels of the CAN module depends the product.

	RL78/F13 (LIN incorporated)	RL78/F13 (CAN & LIN incorporated)	RL78/F14
Channel	—	1	1

18.1 Overview

The RL78/F13 and RL78/F14 incorporate one channel of the Controller Area Network (CAN) module conforming to the ISO11898-1 specifications. Table 18-1 shows the CAN module specifications. Figure 18-1 shows the CAN module block diagram.

In this chapter, the following variables indicate the number of channels and registers.

- i (i = 0): CAN channel number
- j (j = 0 to 15): CAN receive rule entry register number
  (GAFLIDLj, GAFLIDHj, GAFLMLj, GAFLMHj, GAFLPLj, GAFLPHj)
- k (k = 0) : Transmit/receive FIFO buffer number
- m (m = 0, 1): Receive FIFO buffer number
- n (n = 0 to 15): Receive buffer number
- p (p = 0 to 3): Transmit buffer number
- r (r = 0 to 127): CAN RAM test register (RPGACCr) number

Table 18-1. CAN Module Specifications (1/2)

Item	Specification
Number of channels	1
Protocol	ISO11898-1 compliant
Communication speed	• Maximum 1 Mbps Communication speed (CANi bit time clock) = $\frac{1}{\text{CANi bit time}}$ CANi bit time = CANiTq x Tq count per bit CANiTq = $\frac{\text{(BRP[9:0] bits in the CiCFGL register + 1)}}{f_{CAN}}$ i = 0 Tq: Time quantum f_{CAN}: Frequency of CAN clock (selected by the DCS bit in the GCFGL register)
Buffer	20 buffers in total • Individual buffers: 4 buffers (4 buffers for one channel) Transmit buffer: 4 buffers per a channel • Shared buffers: 16 buffers Receive buffer: 0 to 16 buffers Receive FIFO buffer: 2 FIFO buffers (up to 16 buffers allocatable to each) Transmit/receive FIFO buffer: A FIFO buffer per a channel (up to 16 buffers allocatable to each)
Reception function	• Receives data frames and remote frames. • Selects ID format (standard ID, extended ID, or both IDs) to be received. • Sets interrupt enable/disable for each FIFO. • Mirror function (to receive messages transmitted from the own CAN node) • Timestamp function (to record message reception time as a 16-bit timer value)
Reception filter function	• Selects receive messages according to 16 receive rules. • Sets the number of receive rules (0 to 16) for each channel. • Acceptance filter processing: Sets ID and mask for each receive rule. • DLC filter processing: Sets DLC check value for each receive rule.
Receive message transfer function	• Routing function to transfer receive messages to arbitrary destinations (can be transferred to up to 2 buffers). Transfer destination: Receive buffer, receive FIFO buffer, and transmit/receive FIFO buffer • Label addition function Stores label information together when storing a message in a receive buffer and FIFO buffer.
Transmission function	• Transmits data frames and remote frames. • Selects ID format (standard ID, extended ID, or both IDs) to be transmitted. • Sets interrupt enable/disable for each transmit buffer and transmit/receive FIFO buffer. • Selects ID priority transmission or transmit buffer number priority transmission. • Transmit request can be aborted (possible to confirm with the flag) • One-shot transmission function
Interval transmission function	Sets message transmission interval time (transmit mode of transmit/receive FIFO buffers)
Transmit history function	Stores the history information of transmitted messages.

Table 18-1. CAN Module Specifications (2/2)

Item	Specification
Bus off recovery mode selection	Selects a method of returning from bus off state. • ISO11898-1 compliant • Automatic entry to channel halt mode at bus-off entry • Automatic entry to channel halt mode at bus-off end • Entry to channel halt mode by a program • Transition to the error-active state by a program (forcible return from the bus off state)
Error status monitoring	• Monitors CAN protocol errors (stuff error, form error, ACK error, CRC error, bit error, ACK delimiter error, and bus dominant lock). • Detects error status transitions (error warning, error passive, bus off entry, and bus off recovery) • Reads the error counter. • Monitors DLC errors.
Interrupt source	6 sources • Global (2 sources) CAN global receive FIFO interrupt CAN global error interrupt • Channel (4 sources/channel) CANi channel transmit interrupt CANi transmit complete interrupt CANi transmit abort interrupt CANi transmit/receive FIFO transmit complete interrupt CANi transmit history interrupt CANi transmit/receive FIFO receive interrupt CANi channel error interrupt CANi wakeup interrupt
CAN stop mode	Reduces power consumption by stopping clock supply to the CAN module.
CAN clock source	Selects the clock obtained by frequency-dividing f_{CLK} by 2 ($f_{CLK}/2$) or the X1 clock (fx).
Test function	Test function for user evaluation • Listen-only mode • Self-test mode 0 (external loopback) • Self-test mode 1 (internal loopback) • RAM test (read/write test)

Figure 18-1. CAN Module Block Diagram (i = 0)

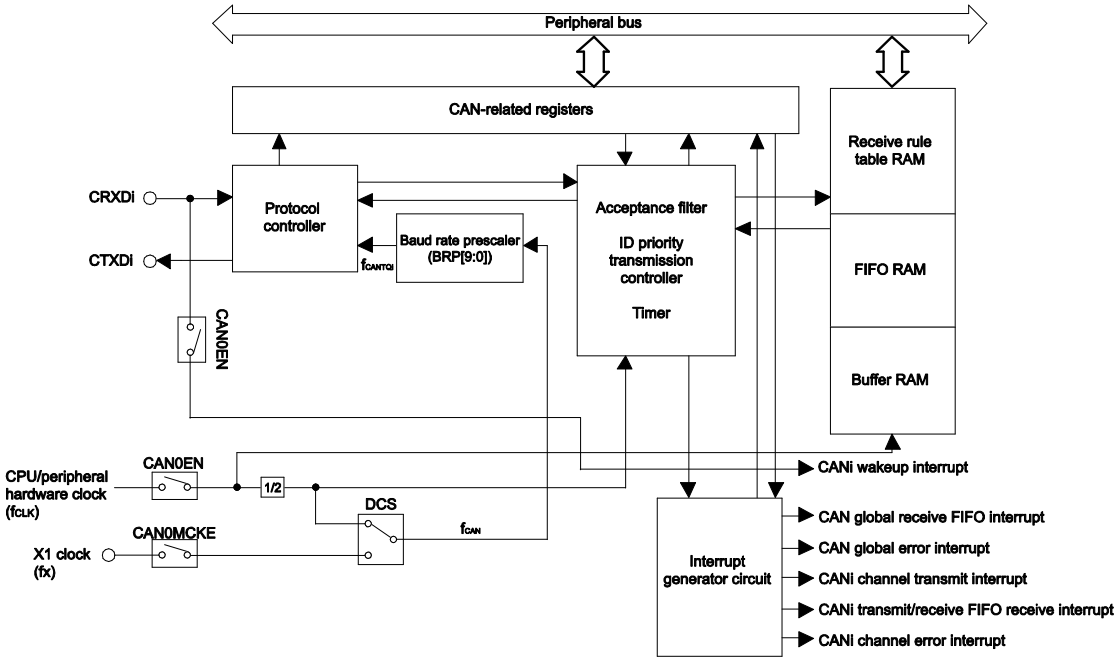

Remark i = 0
BRP[9:0]: Bits in the CiCFGL register
DCS: Bit in the GCFGL register
f_{CANTQi}: CANi Tq clock
f_{CAN}: CAN clock
CAN0EN: Bit in the PER2 register
CAN0MCKE: Bit in the CANCKSEL register

18.2 Input/Output Pins

Table 18-2 lists the I/O pins of the CAN module.

Table 18-2. I/O Pins of the CAN Module

Pin Name	I/O	Description
CRXDi	Input	Receive data input pins of the CAN communication function
CTXDi	Output	Transmit data output pins of the CAN communication function

18.3 Register Descriptions

Table 18-3 lists the registers of the CAN module.

The values after reset of the registers allocated to the CAN RAM area (F03A0H to F0681H) are those after the CAN RAM is initialized.

Table 18-3. List of CAN Module Registers (1/22)

Address	Special Function Register (SFR) Name	Symbol		R/W	Access Size			After Reset
					1 bit	8 bits	16 bits	
F02C1H	Peripheral enable register 2	PER2		R/W	√	√	—	00H
F02C2H	CAN clock select register	CANCKSEL		R/W	√	√	—	00H
F0300H	CAN0 bit configuration register L	C0CFGLL	C0CFGL	R/W	—	√	√	0000H
F0301H		C0CFGLH			—	√		
F0302H	CAN0 bit configuration register H	C0CFGHL	C0CFGH	R/W	—	√	√	0000H
F0303H		C0CFGHH			—	√		
F0304H	CAN0 control register L	C0CTRLL	C0CTRL	R/W	—	√	√	0005H Note
F0305H		C0CTRLH			—	√		
F0306H	CAN0 control register H	C0CTRHL	C0CTRH	R/W	—	√	√	0000H
F0307H		C0CTRHH			—	√		
F0308H	CAN0 status register L	C0STSLL	C0STSL	R	—	√	√	0005H Note
F0309H		C0STSLH			—	√		
F030AH	CAN0 status register H	C0STSHL	C0STSH	R	—	√	√	0000H
F030BH		C0STSHH			—	√		
F030CH	CAN0 error flag register L	C0ERFLLL	C0ERFLL	R/W	—	√	√	0000H
F030DH		C0ERFLLH			—	√		
F030EH	CAN0 error flag register H	C0ERFLHL	C0ERFLH	R	—	√	√	0000H
F030FH		C0ERFLHH			—	√		
F0322H	CAN global configuration register L	GCFGLL	GCFGL	R/W	—	√	√	0000H
F0323H		GCFGLH			—	√		
F0324H	CAN global configuration register H	GCFGHL	GCFGH	R/W	—	√	√	0000H
F0325H		GCFGHH			—	√		
F0326H	CAN global control register L	GCTRLL	GCTRL	R/W	—	√	√	0005H Note
F0327H		GCTRLH			—	√		
F0328H	CAN global control register H	GCTRHL	GCTRH	R/W	—	√	√	0000H
F0329H		GCTRHH			—	√		
F032AH	CAN global status register	GSTSL	GSTS	R	—	√	√	000DH Note
F032BH		GSTSH			—	√		
F032CH	CAN global error flag register	GERFLL		R/W	—	√	—	00H
F032EH	CAN timestamp register	GTSC		R	—	—	√	0000H
F032FH					—	—		
F0330H	CAN receive rule number configuration register	GAFLCFGL	GAFLCFG	R/W	—	√	√	0000H
F0331H		GAFLCFGH			—	√		
F0332H	CAN receive buffer number configuration register	RMNBL	RMNB	R/W	—	√	√	0000H
F0333H		—			—	—		
F0334H	CAN receive buffer receive complete flag register	RMND0L	RMND0	R/W	—	√	√	0000H
F0335H		RMND0H			—	√		
F0338H	CAN receive FIFO control register 0	RFCC0L	RFCC0	R/W	—	√	√	0000H
F0339H		RFCC0H			—	√		
F033AH	CAN receive FIFO control register 1	RFCC1L	RFCC1	R/W	—	√	√	0000H
F033BH		RFCC1H			—	√		

Note When the CAN0EN bit in the PER2 register is set to 0, the read value is undefined.
When the CAN0EN bit in the PER2 register is set to 1, the read value is the initial value listed above.

Table 18-3. List of CAN Module Registers (2/22)

Address	Special Function Register (SFR) Name	Symbol		R/W	Access Size			After Reset
					1 bit	8 bits	16 bits	
F0340H	CAN receive FIFO status register 0	RFSTS0L	RFSTS0	R/W	—	√	√	0001H Note
F0341H		RFSTS0H		R	—	√		
F0342H	CAN receive FIFO status register 1	RFSTS1L	RFSTS1	R/W	—	√	√	0001H Note
F0343H		RFSTS1H		R	—	√		
F0348H	CAN receive FIFO pointer control register 0	RFPCTR0L	RFPCTR0	W	—	√	√	0000H
F0349H		RFPCTR0H			—	√		
F034AH	CAN receive FIFO pointer control register 1	RFPCTR1L	RFPCTR1	W	—	√	√	0000H
F034BH		RFPCTR1H			—	√		
F0350H	CAN0 transmit/receive FIFO control register 0L	CFCCL0L	CFCCL0	R/W	—	√	√	0000H
F0351H		CFCCL0H			—	√		
F0352H	CAN0 transmit/receive FIFO control register 0H	CFCCH0L	CFCCH0	R/W	—	√	√	0000H
F0353H		CFCCH0H			—	√		
F0358H	CAN0 transmit/receive FIFO status register 0	CFSTS0L	CFSTS0	R/W	—	√	√	0001H Note
F0359H		CFSTS0H		R	—	√		
F035CH	CAN0 transmit/receive FIFO pointer control register 0	CFPCTR0L	CFPCTR0	W	—	√	√	0000H
F035DH		—			—	—		
F0360H	Receive FIFO message lost status register	RFMSTS		R	—	√	—	00H
F0361H	CAN0 transmit/receive FIFO message lost status register	CFMSTS		R	—	√	—	00H
F0362H	CAN receive FIFO interrupt status register	RFISTS		R	—	√	—	00H
F0363H	CAN transmit/receive FIFO receive interrupt status register	CFISTS		R	—	√	—	00H
F0364H	CAN0 transmit buffer control register 0	TMC0		R/W	—	√	—	00H
F0365H	CAN0 transmit buffer control register 1	TMC1		R/W	—	√	—	00H
F0366H	CAN0 transmit buffer control register 2	TMC2		R/W	—	√	—	00H
F0367H	CAN0 transmit buffer control register 3	TMC3		R/W	—	√	—	00H
F036CH	CAN0 transmit buffer status register 0	TMSTS0		R/W	—	√	—	00H
F036DH	CAN0 transmit buffer status register 1	TMSTS1		R/W	—	√	—	00H
F036EH	CAN0 transmit buffer status register 2	TMSTS2		R/W	—	√	—	00H
F036FH	CAN0 transmit buffer status register 3	TMSTS3		R/W	—	√	—	00H
F0374H	CAN0 transmit buffer transmit request status register	TMTRSTSL	TMTRSTS	R	—	√	√	0000H
F0375H		TMTRSTSH			—	√		
F0376H	CAN0 transmit buffer transmit complete status register	TMTCSTSL	TMTCSTS	R	—	√	√	0000H
F0377H		TMTCSTSH			—	√		
F0378H	CAN0 transmit buffer transmit abort status register	TMTASTSL	TMTASTS	R	—	√	√	0000H
F0379H		TMTASTSH			—	√		
F037AH	CAN0 transmit buffer interrupt enable register	TMIECL	TMIEC	R/W	—	√	√	0000H
F037BH		TMIECH			—	√		
F037CH	CAN0 transmit history buffer control register	THLCC0L	THLCC0	R/W	—	√	√	0000H
F037DH		THLCC0H			—	√		
F0380H	CAN0 transmit history buffer status register	THLSTS0L	THLSTS0	R/W	—	√	√	0001H Note
F0381H		THLSTS0H			—	√		
F0384H	CAN0 transmit history buffer pointer control register	THLPCTR0L	THLPCTR0	W	—	√	√	0000H
F0385H		THLPCTR0H			—	√		
F0388H	CAN global transmit interrupt status register	GTINTSTSL	GTINTSTS	R	—	√	√	0000H
F0389H		GTINTSTSH			—	√		

Note When the CAN0EN bit in the PER2 register is set to 0, the read value is undefined.
When the CAN0EN bit in the PER2 register is set to 1, the read value is the initial value listed above.

Table 18-3. List of CAN Module Registers (3/22)

Address	Special Function Register (SFR) Name	Symbol		R/W	Access Size			After Reset
					1 bit	8 bits	16 bits	
F038AH	CAN global RAM window control register	GRWCRL	GRWCR	R/W	—	√	√	0000H
F038BH		GRWCRH			—	√		
F038CH	CAN global test configuration register	GTSTCFGL	GTSTCFG	R/W	—	√	√	0000H
F038DH		GTSTCFGH			—	√		
F038EH	CAN global test control register	GTSTCTRL	—	R/W	—	√	—	00H
F038FH		—			—	—		
F0394H	CAN global test protection unlock register	GLOCKK		W	—	—	√	0000H
F0395H					—	—		
F03A0H	CAN receive rule entry register 0AL[Note 1]	GAFLIDL0L	GAFLIDL0	R/W	—	√	√	0000H
F03A1H		GAFLIDL0H			—	√		
F03A0H	CAN receive buffer register 0AL[Note 2]	RMIDL0L	RMIDL0	R	—	√	√	0000H
F03A1H		RMIDL0H			—	√		
F03A2H	CAN receive rule entry register 0AH[Note 1]	GAFLIDH0L	GAFLIDH0	R/W	—	√	√	0000H
F03A3H		GAFLIDH0H			—	√		
F03A2H	CAN receive buffer register 0AH[Note 2]	RMIDH0L	RMIDH0	R	—	√	√	0000H
F03A3H		RMIDH0H			—	√		
F03A4H	CAN receive rule entry register 0BL[Note 1]	GAFLML0L	GAFLML0	R/W	—	√	√	0000H
F03A5H		GAFLML0H			—	√		
F03A4H	CAN receive buffer register 0BL[Note 2]	RMTS0L	RMTS0	R	—	√	√	0000H
F03A5H		RMTS0H			—	√		
F03A6H	CAN receive rule entry register 0BH[Note 1]	GAFLMH0L	GAFLMH0	R/W	—	√	√	0000H
F03A7H		GAFLMH0H			—	√		
F03A6H	CAN receive buffer register 0BH[Note 2]	RMPTR0L	RMPTR0	R	—	√	√	0000H
F03A7H		RMPTR0H			—	√		
F03A8H	CAN receive rule entry register 0CL[Note 1]	GAFLPL0L	GAFLPL0	R/W	—	√	√	0000H
F03A9H		GAFLPL0H			—	√		
F03A8H	CAN receive buffer register 0CL[Note 2]	RMDF00L	RMDF00	R	—	√	√	0000H
F03A9H		RMDF00H			—	√		
F03AAH	CAN receive rule entry register 0CH[Note 1]	GAFLPH0L	GAFLPH0	R/W	—	√	√	0000H
F03ABH		GAFLPH0H			—	√		
F03AAH	CAN receive buffer register 0CH[Note 2]	RMDF10L	RMDF10	R	—	√	√	0000H
F03ABH		RMDF10H			—	√		
F03ACH	CAN receive rule entry register 1AL[Note 1]	GAFLIDL1L	GAFLIDL1	R/W	—	√	√	0000H
F03ADH		GAFLIDL1H			—	√		
F03ACH	CAN receive buffer register 0DL[Note 2]	RMDF20L	RMDF20	R	—	√	√	0000H
F03ADH		RMDF20H			—	√		
F03AEH	CAN receive rule entry register 1AH[Note 1]	GAFLIDH1L	GAFLIDH1	R/W	—	√	√	0000H
F03AFH		GAFLIDH1H			—	√		
F03AEH	CAN receive buffer register 0DH[Note 2]	RMDF30L	RMDF30	R	—	√	√	0000H
F03AFH		RMDF30H			—	√		

Notes 1. These registers are allocated to RAM window 0 for the CAN module (receive rules and CAN RAM test register). When setting these registers, set the RPAGE bit in the GRWCR register to 0.

2. These registers are allocated to RAM window 1 for the CAN module (receive buffer, receive FIFO buffer, transmit/receive FIFO buffer, transmit buffer, and transmit history data). When setting these registers, set the RPAGE bit in the GRWCR register to 1.

Table 18-3. List of CAN Module Registers (4/22)

Address	Special Function Register (SFR) Name	Symbol		R/W	Access Size			After Reset
					1 bit	8 bits	16 bits	
F03B0H	CAN receive rule entry register 1BL[Note 1]	GAFLML1L	GAFLML1	R/W	—	√	√	0000H
F03B1H		GAFLML1H			—	√		
F03B0H	CAN receive buffer register 1AL[Note 2]	RMIDL1L	RMIDL1	R	—	√	√	0000H
F03B1H		RMIDL1H			—	√		
F03B2H	CAN receive rule entry register 1BH[Note 1]	GAFLMH1L	GAFLMH1	R/W	—	√	√	0000H
F03B3H		GAFLMH1H			—	√		
F03B2H	CAN receive buffer register 1AH[Note 2]	RMIDH1L	RMIDH1	R	—	√	√	0000H
F03B3H		RMIDH1H			—	√		
F03B4H	CAN receive rule entry register 1CL[Note 1]	GAFLPL1L	GAFLPL1	R/W	—	√	√	0000H
F03B5H		GAFLPL1H			—	√		
F03B4H	CAN receive buffer register 1BL[Note 2]	RMTS1L	RMTS1	R	—	√	√	0000H
F03B5H		RMTS1H			—	√		
F03B6H	CAN receive rule entry register 1CH[Note 1]	GAFLPH1L	GAFLPH1	R/W	—	√	√	0000H
F03B7H		GAFLPH1H			—	√		
F03B6H	CAN receive buffer register 1BH[Note 2]	RMPTR1L	RMPTR1	R	—	√	√	0000H
F03B7H		RMPTR1H			—	√		
F03B8H	CAN receive rule entry register 2AL[Note 1]	GAFLIDL2L	GAFLIDL2	R/W	—	√	√	0000H
F03B9H		GAFLIDL2H			—	√		
F03B8H	CAN receive buffer register 1CL[Note 2]	RMDF01L	RMDF01	R	—	√	√	0000H
F03B9H		RMDF01H			—	√		
F03BAH	CAN receive rule entry register 2AH[Note 1]	GAFLIDH2L	GAFLIDH2	R/W	—	√	√	0000H
F03BBH		GAFLIDH2H			—	√		
F03BAH	CAN receive buffer register 1CH[Note 2]	RMDF11L	RMDF11	R	—	√	√	0000H
F03BBH		RMDF11H			—	√		
F03BCH	CAN receive rule entry register 2BL[Note 1]	GAFLML2L	GAFLML2	R/W	—	√	√	0000H
F03BDH		GAFLML2H			—	√		
F03BCH	CAN receive buffer register 1DL[Note 2]	RMDF21L	RMDF21	R	—	√	√	0000H
F03BDH		RMDF21H			—	√		
F03BEH	CAN receive rule entry register 2BH[Note 1]	GAFLMH2L	GAFLMH2	R/W	—	√	√	0000H
F03BFH		GAFLMH2H			—	√		
F03BEH	CAN receive buffer register 1DH[Note 2]	RMDF31L	RMDF31	R	—	√	√	0000H
F03BFH		RMDF31H			—	√		
F03C0H	CAN receive rule entry register 2CL[Note 1]	GAFLPL2L	GAFLPL2	R/W	—	√	√	0000H
F03C1H		GAFLPL2H			—	√		
F03C0H	CAN receive buffer register 2AL[Note 2]	RMIDL2L	RMIDL2	R	—	√	√	0000H
F03C1H		RMIDL2H			—	√		
F03C2H	CAN receive rule entry register 2CH[Note 1]	GAFLPH2L	GAFLPH2	R/W	—	√	√	0000H
F03C3H		GAFLPH2H			—	√		
F03C2H	CAN receive buffer register 2AH[Note 2]	RMIDH2L	RMIDH2	R	—	√	√	0000H
F03C3H		RMIDH2H			—	√		
F03C4H	CAN receive rule entry register 3AL[Note 1]	GAFLIDL3L	GAFLIDL3	R/W	—	√	√	0000H
F03C5H		GAFLIDL3H			—	√		

Notes 1. These registers are allocated to RAM window 0 for the CAN module (receive rules and CAN RAM test register). When setting these registers, set the RPAGE bit in the GRWCR register to 0.

2. These registers are allocated to RAM window 1 for the CAN module (receive buffer, receive FIFO buffer, transmit/receive FIFO buffer, transmit buffer, and transmit history data). When setting these registers, set the RPAGE bit in the GRWCR register to 1.

Table 18-3. List of CAN Module Registers (5/22)

Address	Special Function Register (SFR) Name	Symbol		R/W	Access Size			After Reset
					1 bit	8 bits	16 bits	
F03C4H	CAN receive buffer register 2BL[Note 2]	RMTS2L	RMTS2	R	—	√	√	0000H
F03C5H		RMTS2H			—	√		
F03C6H	CAN receive rule entry register 3AH[Note 1]	GAFLIDH3L	GAFLIDH3	R/W	—	√	√	0000H
F03C7H		GAFLIDH3H			—	√		
F03C6H	CAN receive buffer register 2BH[Note 2]	RMPTR2L	RMPTR2	R	—	√	√	0000H
F03C7H		RMPTR2H			—	√		
F03C8H	CAN receive rule entry register 3BL[Note 1]	GAFLML3L	GAFLML3	R/W	—	√	√	0000H
F03C9H		GAFLML3H			—	√		
F03C8H	CAN receive buffer register 2CL[Note 2]	RMDF02L	RMDF02	R	—	√	√	0000H
F03C9H		RMDF02H			—	√		
F03CAH	CAN receive rule entry register 3BH[Note 1]	GAFLMH3L	GAFLMH3	R/W	—	√	√	0000H
F03CBH		GAFLMH3H			—	√		
F03CAH	CAN receive buffer register 2CH[Note 2]	RMDF12L	RMDF12	R	—	√	√	0000H
F03CBH		RMDF12H			—	√		
F03CCH	CAN receive rule entry register 3CL[Note 1]	GAFLPL3L	GAFLPL3	R/W	—	√	√	0000H
F03CDH		GAFLPL3H			—	√		
F03CCH	CAN receive buffer register 2DL[Note 2]	RMDF22L	RMDF22	R	—	√	√	0000H
F03CDH		RMDF22H			—	√		
F03CEH	CAN receive rule entry register 3CH[Note 1]	GAFLPH3L	GAFLPH3	R/W	—	√	√	0000H
F03CFH		GAFLPH3H			—	√		
F03CEH	CAN receive buffer register 2DH[Note 2]	RMDF32L	RMDF32	R	—	√	√	0000H
F03CFH		RMDF32H			—	√		
F03D0H	CAN receive rule entry register 4AL[Note 1]	GAFLIDL4L	GAFLIDL4	R/W	—	√	√	0000H
F03D1H		GAFLIDL4H			—	√		
F03D0H	CAN receive buffer register 3AL[Note 2]	RMIDL3L	RMIDL3	R	—	√	√	0000H
F03D1H		RMIDL3H			—	√		
F03D2H	CAN receive rule entry register 4AH[Note 1]	GAFLIDH4L	GAFLIDH4	R/W	—	√	√	0000H
F03D3H		GAFLIDH4H			—	√		
F03D2H	CAN receive buffer register 3AH[Note 2]	RMIDH3L	RMIDH3	R	—	√	√	0000H
F03D3H		RMIDH3H			—	√		
F03D4H	CAN receive rule entry register 4BL[Note 1]	GAFLML4L	GAFLML4	R/W	—	√	√	0000H
F03D5H		GAFLML4H			—	√		
F03D4H	CAN receive buffer register 3BL[Note 2]	RMTS3L	RMTS3	R	—	√	√	0000H
F03D5H		RMTS3H			—	√		
F03D6H	CAN receive rule entry register 4BH[Note 1]	GAFLMH4L	GAFLMH4	R/W	—	√	√	0000H
F03D7H		GAFLMH4H			—	√		
F03D6H	CAN receive buffer register 3BH[Note 2]	RMPTR3L	RMPTR3	R	—	√	√	0000H
F03D7H		RMPTR3H			—	√		
F03D8H	CAN receive rule entry register 4CL[Note 1]	GAFLPL4L	GAFLPL4	R/W	—	√	√	0000H
F03D9H		GAFLPL4H			—	√		
F03D8H	CAN receive buffer register 3CL[Note 2]	RMDF03L	RMDF03	R	—	√	√	0000H
F03D9H		RMDF03H			—	√		

Notes 1. These registers are allocated to RAM window 0 for the CAN module (receive rules and CAN RAM test register). When setting these registers, set the RPAGE bit in the GRWCR register to 0.

2. These registers are allocated to RAM window 1 for the CAN module (receive buffer, receive FIFO buffer, transmit/receive FIFO buffer, transmit buffer, and transmit history data). When setting these registers, set the RPAGE bit in the GRWCR register to 1.

Table 18-3. List of CAN Module Registers (6/22)

Address	Special Function Register (SFR) Name	Symbol		R/W	Access Size			After Reset
					1 bit	8 bits	16 bits	
F03DAH	CAN receive rule entry register 4CH[Note 1]	GAFLPH4L	GAFLPH4	R/W	—	√	√	0000H
F03DBH		GAFLPH4H			—	√		
F03DAH	CAN receive buffer register 3CH[Note 2]	RMDF13L	RMDF13	R	—	√	√	0000H
F03DBH		RMDF13H			—	√		
F03DCH	CAN receive rule entry register 5AL[Note 1]	GAFLIDL5L	GAFLIDL5	R/W	—	√	√	0000H
F03DDH		GAFLIDL5H			—	√		
F03DCH	CAN receive buffer register 3DL[Note 2]	RMDF23L	RMDF23	R	—	√	√	0000H
F03DDH		RMDF23H			—	√		
F03DEH	CAN receive rule entry register 5AH[Note 1]	GAFLIDH5L	GAFLIDH5	R/W	—	√	√	0000H
F03DFH		GAFLIDH5H			—	√		
F03DEH	CAN receive buffer register 3DH[Note 2]	RMDF33L	RMDF33	R	—	√	√	0000H
F03DFH		RMDF33H			—	√		
F03E0H	CAN receive rule entry register 5BL[Note 1]	GAFLML5L	GAFLML5	R/W	—	√	√	0000H
F03E1H		GAFLML5H			—	√		
F03E0H	CAN receive buffer register 4AL[Note 2]	RMIDL4L	RMIDL4	R	—	√	√	0000H
F03E1H		RMIDL4H			—	√		
F03E2H	CAN receive rule entry register 5BH[Note 1]	GAFLMH5L	GAFLMH5	R/W	—	√	√	0000H
F03E3H		GAFLMH5H			—	√		
F03E2H	CAN receive buffer register 4AH[Note 2]	RMIDH4L	RMIDH4	R	—	√	√	0000H
F03E3H		RMIDH4H			—	√		
F03E4H	CAN receive rule entry register 5CL[Note 1]	GAFLPL5L	GAFLPL5	R/W	—	√	√	0000H
F03E5H		GAFLPL5H			—	√		
F03E4H	CAN receive buffer register 4BL[Note 2]	RMTS4L	RMTS4	R	—	√	√	0000H
F03E5H		RMTS4H			—	√		
F03E6H	CAN receive rule entry register 5CH[Note 1]	GAFLPH5L	GAFLPH5	R/W	—	√	√	0000H
F03E7H		GAFLPH5H			—	√		
F03E6H	CAN receive buffer register 4BH[Note 2]	RMPTR4L	RMPTR4	R	—	√	√	0000H
F03E7H		RMPTR4H			—	√		
F03E8H	CAN receive rule entry register 6AL[Note 1]	GAFLIDL6L	GAFLIDL6	R/W	—	√	√	0000H
F03E9H		GAFLIDL6H			—	√		
F03E8H	CAN receive buffer register 4CL[Note 2]	RMDF04L	RMDF04	R	—	√	√	0000H
F03E9H		RMDF04H			—	√		
F03EAH	CAN receive rule entry register 6AH[Note 1]	GAFLIDH6L	GAFLIDH6	R/W	—	√	√	0000H
F03EBH		GAFLIDH6H			—	√		
F03EAH	CAN receive buffer register 4CH[Note 2]	RMDF14L	RMDF14	R	—	√	√	0000H
F03EBH		RMDF14H			—	√		
F03ECH	CAN receive rule entry register 6BL[Note 1]	GAFLML6L	GAFLML6	R/W	—	√	√	0000H
F03EDH		GAFLML6H			—	√		
F03ECH	CAN receive buffer register 4DL[Note 2]	RMDF24L	RMDF24	R	—	√	√	0000H
F03EDH		RMDF24H			—	√		
F03EEH	CAN receive rule entry register 6BH[Note 1]	GAFLMH6L	GAFLMH6	R/W	—	√	√	0000H
F03EFH		GAFLMH6H			—	√		

Notes 1. These registers are allocated to RAM window 0 for the CAN module (receive rules and CAN RAM test register). When setting these registers, set the RPAGE bit in the GRWCR register to 0.

2. These registers are allocated to RAM window 1 for the CAN module (receive buffer, receive FIFO buffer, transmit/receive FIFO buffer, transmit buffer, and transmit history data). When setting these registers, set the RPAGE bit in the GRWCR register to 1.

Table 18-3. List of CAN Module Registers (7/22)

Address	Special Function Register (SFR) Name	Symbol		R/W	Access Size			After Reset
					1 bit	8 bits	16 bits	
F03EEH	CAN receive buffer register 4DH[Note 2]	RMDF34L	RMDF34	R/W	—	√	√	0000H
F03EFH		RMDF34H			—	√		
F03F0H	CAN receive rule entry register 6CL[Note 1]	GAFLPL6L	GAFLPL6	R/W	—	√	√	0000H
F03F1H		GAFLPL6H			—	√		
F03F0H	CAN receive buffer register 5AL[Note 2]	RMIDL5L	RMIDL5	R	—	√	√	0000H
F03F1H		RMIDL5H			—	√		
F03F2H	CAN receive rule entry register 6CH[Note 1]	GAFLPH6L	GAFLPH6	R/W	—	√	√	0000H
F03F3H		GAFLPH6H			—	√		
F03F2H	CAN receive buffer register 5AH[Note 2]	RMIDH5L	RMIDH5	R	—	√	√	0000H
F03F3H		RMIDH5H			—	√		
F03F4H	CAN receive rule entry register 7AL[Note 1]	GAFLIDL7L	GAFLIDL7	R/W	—	√	√	0000H
F03F5H		GAFLIDL7H			—	√		
F03F4H	CAN receive buffer register 5BL[Note 2]	RMTS5L	RMTS5	R	—	√	√	0000H
F03F5H		RMTS5H			—	√		
F03F6H	CAN receive rule entry register 7AH[Note 1]	GAFLIDH7L	GAFLIDH7	R/W	—	√	√	0000H
F03F7H		GAFLIDH7H			—	√		
F03F6H	CAN receive buffer register 5BH[Note 2]	RMPTR5L	RMPTR5	R	—	√	√	0000H
F03F7H		RMPTR5H			—	√		
F03F8H	CAN receive rule entry register 7BL[Note 1]	GAFLML7L	GAFLML7	R/W	—	√	√	0000H
F03F9H		GAFLML7H			—	√		
F03F8H	CAN receive buffer register 5CL[Note 2]	RMDF05L	RMDF05	R	—	√	√	0000H
F03F9H		RMDF05H			—	√		
F03FAH	CAN receive rule entry register 7BH[Note 1]	GAFLMH7L	GAFLMH7	R/W	—	√	√	0000H
F03FBH		GAFLMH7H			—	√		
F03FAH	CAN receive buffer register 5CH[Note 2]	RMDF15L	RMDF15	R	—	√	√	0000H
F03FBH		RMDF15H			—	√		
F03FCH	CAN receive rule entry register 7CL[Note 1]	GAFLPL7L	GAFLPL7	R/W	—	√	√	0000H
F03FDH		GAFLPL7H			—	√		
F03FCH	CAN receive buffer register 5DL[Note 2]	RMDF25L	RMDF25	R	—	√	√	0000H
F03FDH		RMDF25H			—	√		
F03FEH	CAN receive rule entry register 7CH[Note 1]	GAFLPH7L	GAFLPH7	R/W	—	√	√	0000H
F03FFH		GAFLPH7H			—	√		
F03FEH	CAN receive buffer register 5DH[Note 2]	RMDF35L	RMDF35	R	—	√	√	0000H
F03FFH		RMDF35H			—	√		
F0400H	CAN receive rule entry register 8AL[Note 1]	GAFLIDL8L	GAFLIDL8	R/W	—	√	√	0000H
F0401H		GAFLIDL8H			—	√		
F0400H	CAN receive buffer register 6AL[Note 2]	RMIDL6L	RMIDL6	R	—	√	√	0000H
F0401H		RMIDL6H			—	√		
F0402H	CAN receive rule entry register 8AH[Note 1]	GAFLIDH8L	GAFLIDH8	R/W	—	√	√	0000H
F0403H		GAFLIDH8H			—	√		
F0402H	CAN receive buffer register 6AH[Note 2]	RMIDH6L	RMIDH6	R	—	√	√	0000H
F0403H		RMIDH6H			—	√		

Notes 1. These registers are allocated to RAM window 0 for the CAN module (receive rules and CAN RAM test register). When setting these registers, set the RPAGE bit in the GRWCR register to 0.

2. These registers are allocated to RAM window 1 for the CAN module (receive buffer, receive FIFO buffer, transmit/receive FIFO buffer, transmit buffer, and transmit history data). When setting these registers, set the RPAGE bit in the GRWCR register to 1.

Table 18-3. List of CAN Module Registers (8/22)

Address	Special Function Register (SFR) Name	Symbol		R/W	Access Size			After Reset
					1 bit	8 bits	16 bits	
F0404H	CAN receive rule entry register 8BL[Note 1]	GAFLML8L	GAFLML8	R/W	—	√	√	0000H
F0405H		GAFLML8H			—	√		
F0404H	CAN receive buffer register 6BL[Note 2]	RMTS6L	RMTS6	R	—	√	√	0000H
F0405H		RMTS6H			—	√		
F0406H	CAN receive rule entry register 8BH[Note 1]	GAFLMH8L	GAFLMH8	R/W	—	√	√	0000H
F0407H		GAFLMH8H			—	√		
F0406H	CAN receive buffer register 6BH[Note 2]	RMPTR6L	RMPTR6	R	—	√	√	0000H
F0407H		RMPTR6H			—	√		
F0408H	CAN receive rule entry register 8CL[Note 1]	GAFLPL8L	GAFLPL8	R/W	—	√	√	0000H
F0409H		GAFLPL8H			—	√		
F0408H	CAN receive buffer register 6CL[Note 2]	RMDF06L	RMDF06	R	—	√	√	0000H
F0409H		RMDF06H			—	√		
F040AH	CAN receive rule entry register 8CH[Note 1]	GAFLPH8L	GAFLPH8	R/W	—	√	√	0000H
F040BH		GAFLPH8H			—	√		
F040AH	CAN receive buffer register 6CH[Note 2]	RMDF16L	RMDF16	R	—	√	√	0000H
F040BH		RMDF16H			—	√		
F040CH	CAN receive rule entry register 9AL[Note 1]	GAFLIDL9L	GAFLIDL9	R/W	—	√	√	0000H
F040DH		GAFLIDL9H			—	√		
F040CH	CAN receive buffer register 6DL[Note 2]	RMDF26L	RMDF26	R	—	√	√	0000H
F040DH		RMDF26H			—	√		
F040EH	CAN receive rule entry register 9AH[Note 1]	GAFLIDH9L	GAFLIDH9	R/W	—	√	√	0000H
F040FH		GAFLIDH9H			—	√		
F040EH	CAN receive buffer register 6DH[Note 2]	RMDF36L	RMDF36	R	—	√	√	0000H
F040FH		RMDF36H			—	√		
F0410H	CAN receive rule entry register 9BL[Note 1]	GAFLML9L	GAFLML9	R/W	—	√	√	0000H
F0411H		GAFLML9H			—	√		
F0410H	CAN receive buffer register 7AL[Note 2]	RMIDL7L	RMIDL7	R	—	√	√	0000H
F0411H		RMIDL7H			—	√		
F0412H	CAN receive rule entry register 9BH[Note 1]	GAFLMH9L	GAFLMH9	R/W	—	√	√	0000H
F0413H		GAFLMH9H			—	√		
F0412H	CAN receive buffer register 7AH[Note 2]	RMIDH7L	RMIDH7	R	—	√	√	0000H
F0413H		RMIDH7H			—	√		
F0414H	CAN receive rule entry register 9CL[Note 1]	GAFLPL9L	GAFLPL9	R/W	—	√	√	0000H
F0415H		GAFLPL9H			—	√		
F0414H	CAN receive buffer register 7BL[Note 2]	RMTS7L	RMTS7	R	—	√	√	0000H
F0415H		RMTS7H			—	√		
F0416H	CAN receive rule entry register 9CH[Note 1]	GAFLPH9L	GAFLPH9	R/W	—	√	√	0000H
F0417H		GAFLPH9H			—	√		
F0416H	CAN receive buffer register 7BH[Note 2]	RMPTR7L	RMPTR7	R	—	√	√	0000H
F0417H		RMPTR7H			—	√		
F0418H	CAN receive rule entry register 10AL[Note 1]	GAFLIDL10L	GAFLIDL10	R/W	—	√	√	0000H
F0419H		GAFLIDL10H			—	√		

Notes 1. These registers are allocated to RAM window 0 for the CAN module (receive rules and CAN RAM test register). When setting these registers, set the RPAGE bit in the GRWCR register to 0.

2. These registers are allocated to RAM window 1 for the CAN module (receive buffer, receive FIFO buffer, transmit/receive FIFO buffer, transmit buffer, and transmit history data). When setting these registers, set the RPAGE bit in the GRWCR register to 1.

Table 18-3. List of CAN Module Registers (9/22)

Address	Special Function Register (SFR) Name	Symbol		R/W	Access Size			After Reset
					1 bit	8 bits	16 bits	
F0418H	CAN receive buffer register 7CL[Note 2]	RMDF07L	RMDF07	R	—	√	√	0000H
F0419H		RMDF07H			—	√		
F041AH	CAN receive rule entry register 10AH[Note 1]	GAFLIDH10L	GAFLIDH10	R/W	—	√	√	0000H
F041BH		GAFLIDH10H			—	√		
F041AH	CAN receive buffer register 7CH[Note 2]	RMDF17L	RMDF17	R	—	√	√	0000H
F041BH		RMDF17H			—	√		
F041CH	CAN receive rule entry register 10BL[Note 1]	GAFLML10L	GAFLML10	R/W	—	√	√	0000H
F041DH		GAFLML10H			—	√		
F041CH	CAN receive buffer register 7DL[Note 2]	RMDF27L	RMDF27	R	—	√	√	0000H
F041DH		RMDF27H			—	√		
F041EH	CAN receive rule entry register 10BH[Note 1]	GAFLMH10L	GAFLMH10	R/W	—	√	√	0000H
F041FH		GAFLMH10H			—	√		
F041EH	CAN receive buffer register 7DH[Note 2]	RMDF37L	RMDF37	R	—	√	√	0000H
F041FH		RMDF37H			—	√		
F0420H	CAN receive rule entry register 10CL[Note 1]	GAFLPL10L	GAFLPL10	R/W	—	√	√	0000H
F0421H		GAFLPL10H			—	√		
F0420H	CAN receive buffer register 8AL[Note 2]	RMIDL8L	RMIDL8	R	—	√	√	0000H
F0421H		RMIDL8H			—	√		
F0422H	CAN receive rule entry register 10CH[Note 1]	GAFLPH10L	GAFLPH10	R/W	—	√	√	0000H
F0423H		GAFLPH10H			—	√		
F0422H	CAN receive buffer register 8AH[Note 2]	RMIDH8L	RMIDH8	R	—	√	√	0000H
F0423H		RMIDH8H			—	√		
F0424H	CAN receive rule entry register 11AL[Note 1]	GAFLIDL11L	GAFLIDL11	R/W	—	√	√	0000H
F0425H		GAFLIDL11H			—	√		
F0424H	CAN receive buffer register 8BL[Note 2]	RMTS8L	RMTS8	R	—	√	√	0000H
F0425H		RMTS8H			—	√		
F0426H	CAN receive rule entry register 11AH[Note 1]	GAFLIDH11L	GAFLIDH11	R/W	—	√	√	0000H
F0427H		GAFLIDH11H			—	√		
F0426H	CAN receive buffer register 8BH[Note 2]	RMPTR8L	RMPTR8	R	—	√	√	0000H
F0427H		RMPTR8H			—	√		
F0428H	CAN receive rule entry register 11BL[Note 1]	GAFLML11L	GAFLML11	R/W	—	√	√	0000H
F0429H		GAFLML11H			—	√		
F0428H	CAN receive buffer register 8CL[Note 2]	RMDF08L	RMDF08	R	—	√	√	0000H
F0429H		RMDF08H			—	√		
F042AH	CAN receive rule entry register 11BH[Note 1]	GAFLMH11L	GAFLMH11	R/W	—	√	√	0000H
F042BH		GAFLMH11H			—	√		
F042AH	CAN receive buffer register 8CH[Note 2]	RMDF18L	RMDF18	R	—	√	√	0000H
F042BH		RMDF18H			—	√		
F042CH	CAN receive rule entry register 11CL[Note 1]	GAFLPL11L	GAFLPL11	R/W	—	√	√	0000H
F042DH		GAFLPL11H			—	√		
F042CH	CAN receive buffer register 8DL[Note 2]	RMDF28L	RMDF28	R	—	√	√	0000H
F042DH		RMDF28H			—	√		

Notes 1. These registers are allocated to RAM window 0 for the CAN module (receive rules and CAN RAM test register). When setting these registers, set the RPAGE bit in the GRWCR register to 0.

2. These registers are allocated to RAM window 1 for the CAN module (receive buffer, receive FIFO buffer, transmit/receive FIFO buffer, transmit buffer, and transmit history data). When setting these registers, set the RPAGE bit in the GRWCR register to 1.

Table 18-3. List of CAN Module Registers (10/22)

Address	Special Function Register (SFR) Name	Symbol		R/W	Access Size			After Reset
					1 bit	8 bits	16 bits	
F042EH	CAN receive rule entry register 11CH[Note 1]	GAFLPH11L	GAFLPH11	R/W	—	√	√	0000H
F042FH		GAFLPH11H			—	√		
F042EH	CAN receive buffer register 8DH[Note 2]	RMDF38L	RMDF38	R	—	√	√	0000H
F042FH		RMDF38H			—	√		
F0430H	CAN receive rule entry register 12AL[Note 1]	GAFLIDL12L	GAFLIDL12	R/W	—	√	√	0000H
F0431H		GAFLIDL12H			—	√		
F0430H	CAN receive buffer register 9AL[Note 2]	RMIDL9L	RMIDL9	R	—	√	√	0000H
F0431H		RMIDL9H			—	√		
F0432H	CAN receive rule entry register 12AH[Note 1]	GAFLIDH12L	GAFLIDH12	R/W	—	√	√	0000H
F0433H		GAFLIDH12H			—	√		
F0432H	CAN receive buffer register 9AH[Note 2]	RMIDH9L	RMIDH9	R	—	√	√	0000H
F0433H		RMIDH9H			—	√		
F0434H	CAN receive rule entry register 12BL[Note 1]	GAFLML12L	GAFLML12	R/W	—	√	√	0000H
F0435H		GAFLML12H			—	√		
F0434H	CAN receive buffer register 9BL[Note 2]	RMTS9L	RMTS9	R	—	√	√	0000H
F0435H		RMTS9H			—	√		
F0436H	CAN receive rule entry register 12BH[Note 1]	GAFLMH12L	GAFLMH12	R/W	—	√	√	0000H
F0437H		GAFLMH12H			—	√		
F0436H	CAN receive buffer register 9BH[Note 2]	RMPTR9L	RMPTR9	R	—	√	√	0000H
F0437H		RMPTR9H			—	√		
F0438H	CAN receive rule entry register 12CL[Note 1]	GAFLPL12L	GAFLPL12	R/W	—	√	√	0000H
F0439H		GAFLPL12H			—	√		
F0438H	CAN receive buffer register 9CL[Note 2]	RMDF09L	RMDF09	R	—	√	√	0000H
F0439H		RMDF09H			—	√		
F043AH	CAN receive rule entry register 12CH[Note 1]	GAFLPH12L	GAFLPH12	R/W	—	√	√	0000H
F043BH		GAFLPH12H			—	√		
F043AH	CAN receive buffer register 9CH[Note 2]	RMDF19L	RMDF19	R	—	√	√	0000H
F043BH		RMDF19H			—	√		
F043CH	CAN receive rule entry register 13AL[Note 1]	GAFLIDL13L	GAFLIDL13	R/W	—	√	√	0000H
F043DH		GAFLIDL13H			—	√		
F043CH	CAN receive buffer register 9DL[Note 2]	RMDF29L	RMDF29	R	—	√	√	0000H
F043DH		RMDF29H			—	√		
F043EH	CAN receive rule entry register 13AH[Note 1]	GAFLIDH13L	GAFLIDH13	R/W	—	√	√	0000H
F043FH		GAFLIDH13H			—	√		
F043EH	CAN receive buffer register 9DH[Note 2]	RMDF39L	RMDF39	R	—	√	√	0000H
F043FH		RMDF39H			—	√		
F0440H	CAN receive rule entry register 13BL[Note 1]	GAFLML13L	GAFLML13	R/W	—	√	√	0000H
F0441H		GAFLML13H			—	√		
F0440H	CAN receive buffer register 10AL[Note 2]	RMIDL10L	RMIDL10	R	—	√	√	0000H
F0441H		RMIDL10H			—	√		
F0442H	CAN receive rule entry register 13BH[Note 1]	GAFLMH13L	GAFLMH13	R/W	—	√	√	0000H
F0443H		GAFLMH13H			—	√		

Notes 1. These registers are allocated to RAM window 0 for the CAN module (receive rules and CAN RAM test register). When setting these registers, set the RPAGE bit in the GRWCR register to 0.

2. These registers are allocated to RAM window 1 for the CAN module (receive buffer, receive FIFO buffer, transmit/receive FIFO buffer, transmit buffer, and transmit history data). When setting these registers, set the RPAGE bit in the GRWCR register to 1.

Table 18-3. List of CAN Module Registers (11/22)

Address	Special Function Register (SFR) Name	Symbol		R/W	Access Size			After Reset
					1 bit	8 bits	16 bits	
F0442H	CAN receive buffer register 10AH[Note 2]	RMIDH10L	RMIDH10	R	—	√	√	0000H
F0443H		RMIDH10H			—	√		
F0444H	CAN receive rule entry register 13CL[Note 1]	GAFLPL13L	GAFLPL13	R/W	—	√	√	0000H
F0445H		GAFLPL13H			—	√		
F0444H	CAN receive buffer register 10BL[Note 2]	RMTS10L	RMTS10	R	—	√	√	0000H
F0445H		RMTS10H			—	√		
F0446H	CAN receive rule entry register 13CH[Note 1]	GAFLPH13L	GAFLPH13	R/W	—	√	√	0000H
F0447H		GAFLPH13H			—	√		
F0446H	CAN receive buffer register 10BH[Note 2]	RMPTR10L	RMPTR10	R	—	√	√	0000H
F0447H		RMPTR10H			—	√		
F0448H	CAN receive rule entry register 14AL[Note 1]	GAFLIDL14L	GAFLIDL14	R/W	—	√	√	0000H
F0449H		GAFLIDL14H			—	√		
F0448H	CAN receive buffer register 10CL[Note 2]	RMDF010L	RMDF010	R	—	√	√	0000H
F0449H		RMDF010H			—	√		
F044AH	CAN receive rule entry register 14AH[Note 1]	GAFLIDH14L	GAFLIDH14	R/W	—	√	√	0000H
F044BH		GAFLIDH14H			—	√		
F044AH	CAN receive buffer register 10CH[Note 2]	RMDF110L	RMDF110	R	—	√	√	0000H
F044BH		RMDF110H			—	√		
F044CH	CAN receive rule entry register 14BL[Note 1]	GAFLML14L	GAFLML14	R/W	—	√	√	0000H
F044DH		GAFLML14H			—	√		
F044CH	CAN receive buffer register 10DL[Note 2]	RMDF210L	RMDF210	R	—	√	√	0000H
F044DH		RMDF210H			—	√		
F044EH	CAN receive rule entry register 14BH[Note 1]	GAFLMH14L	GAFLMH14	R/W	—	√	√	0000H
F044FH		GAFLMH14H			—	√		
F044EH	CAN receive buffer register 10DH[Note 2]	RMDF310L	RMDF310	R	—	√	√	0000H
F044FH		RMDF310H			—	√		
F0450H	CAN receive rule entry register 14CL[Note 1]	GAFLPL14L	GAFLPL14	R/W	—	√	√	0000H
F0451H		GAFLPL14H			—	√		
F0450H	CAN receive buffer register 11AL[Note 2]	RMIDL11L	RMIDL11	R	—	√	√	0000H
F0451H		RMIDL11H			—	√		
F0452H	CAN receive rule entry register 14CH[Note 1]	GAFLPH14L	GAFLPH14	R/W	—	√	√	0000H
F0453H		GAFLPH14H			—	√		
F0452H	CAN receive buffer register 11AH[Note 2]	RMIDH11L	RMIDH11	R	—	√	√	0000H
F0453H		RMIDH11H			—	√		
F0454H	CAN receive rule entry register 15AL[Note 1]	GAFLIDL15L	GAFLIDL15	R/W	—	√	√	0000H
F0455H		GAFLIDL15H			—	√		
F0454H	CAN receive buffer register 11BL[Note 2]	RMTS11L	RMTS11	R	—	√	√	0000H
F0455H		RMTS11H			—	√		
F0456H	CAN receive rule entry register 15AH[Note 1]	GAFLIDH15L	GAFLIDH15	R/W	—	√	√	0000H
F0457H		GAFLIDH15H			—	√		
F0456H	CAN receive buffer register 11BH[Note 2]	RMPTR11L	RMPTR11	R	—	√	√	0000H
F0457H		RMPTR11H			—	√		

Notes 1. These registers are allocated to RAM window 0 for the CAN module (receive rules and CAN RAM test register). When setting these registers, set the RPAGE bit in the GRWCR register to 0.

2. These registers are allocated to RAM window 1 for the CAN module (receive buffer, receive FIFO buffer, transmit/receive FIFO buffer, transmit buffer, and transmit history data). When setting these registers, set the RPAGE bit in the GRWCR register to 1.

Table 18-3. List of CAN Module Registers (12/22)

Address	Special Function Register (SFR) Name	Symbol		R/W	Access Size			After Reset
					1 bit	8 bits	16 bits	
F0458H	CAN receive rule entry register 15BL[Note 1]	GAFLML15L	GAFLML15	R/W	—	√	√	0000H
F0459H		GAFLML15H			—	√		
F0458H	CAN receive buffer register 11CL[Note 2]	RMDF011L	RMDF011	R	—	√	√	0000H
F0459H		RMDF011H			—	√		
F045AH	CAN receive rule entry register 15BH[Note 1]	GAFLMH15L	GAFLMH15	R/W	—	√	√	0000H
F045BH		GAFLMH15H			—	√		
F045AH	CAN receive buffer register 11CH[Note 2]	RMDF111L	RMDF111	R	—	√	√	0000H
F045BH		RMDF111H			—	√		
F045CH	CAN receive rule entry register 15CL[Note 1]	GAFLPL15L	GAFLPL15	R/W	—	√	√	0000H
F045DH		GAFLPL15H			—	√		
F045CH	CAN receive buffer register 11DL[Note 2]	RMDF211L	RMDF211	R	—	√	√	0000H
F045DH		RMDF211H			—	√		
F045EH	CAN receive rule entry register 15CH[Note 1]	GAFLPH15L	GAFLPH15	R/W	—	√	√	0000H
F045FH		GAFLPH15H			—	√		
F045EH	CAN receive buffer register 11DH[Note 2]	RMDF311L	RMDF311	R	—	√	√	0000H
F045FH		RMDF311H			—	√		
F0460H	CAN receive buffer register 12AL[Note 2]	RMIDL12L	RMIDL12	R	—	√	√	0000H
F0461H		RMIDL12H			—	√		
F0462H	CAN receive buffer register 12AH[Note 2]	RMIDH12L	RMIDH12	R	—	√	√	0000H
F0463H		RMIDH12H			—	√		
F0464H	CAN receive buffer register 12BL[Note 2]	RMTS12L	RMTS12	R	—	√	√	0000H
F0465H		RMTS12H			—	√		
F0466H	CAN receive buffer register 12BH[Note 2]	RMPTR12L	RMPTR12	R	—	√	√	0000H
F0467H		RMPTR12H			—	√		
F0468H	CAN receive buffer register 12CL[Note 2]	RMDF012L	RMDF012	R	—	√	√	0000H
F0469H		RMDF012H			—	√		
F046AH	CAN receive buffer register 12CH[Note 2]	RMDF112L	RMDF112	R	—	√	√	0000H
F046BH		RMDF112H			—	√		
F046CH	CAN receive buffer register 12DL[Note 2]	RMDF212L	RMDF212	R	—	√	√	0000H
F046DH		RMDF212H			—	√		
F046EH	CAN receive buffer register 12DH[Note 2]	RMDF312L	RMDF312	R	—	√	√	0000H
F046FH		RMDF312H			—	√		
F0470H	CAN receive buffer register 13AL[Note 2]	RMIDL13L	RMIDL13	R	—	√	√	0000H
F0471H		RMIDL13H			—	√		
F0472H	CAN receive buffer register 13AH[Note 2]	RMIDH13L	RMIDH13	R	—	√	√	0000H
F0473H		RMIDH13H			—	√		
F0474H	CAN receive buffer register 13BL[Note 2]	RMTS13L	RMTS13	R	—	√	√	0000H
F0475H		RMTS13H			—	√		
F0476H	CAN receive buffer register 13BH[Note 2]	RMPTR13L	RMPTR13	R	—	√	√	0000H
F0477H		RMPTR13H			—	√		
F0478H	CAN receive buffer register 13CL[Note 2]	RMDF013L	RMDF013	R	—	√	√	0000H
F0479H		RMDF013H			—	√		

Notes 1. These registers are allocated to RAM window 0 for the CAN module (receive rules and CAN RAM test register). When setting these registers, set the RPAGE bit in the GRWCR register to 0.

2. These registers are allocated to RAM window 1 for the CAN module (receive buffer, receive FIFO buffer, transmit/receive FIFO buffer, transmit buffer, and transmit history data). When setting these registers, set the RPAGE bit in the GRWCR register to 1.

Table 18-3. List of CAN Module Registers (13/22)

Address	Special Function Register (SFR) Name	Symbol		R/W	Access Size			After Reset
					1 bit	8 bits	16 bits	
F047AH	CAN receive buffer register 13CH[Note 2]	RMDF113L	RMDF113	R	—	√	√	0000H
F047BH		RMDF113H			—	√		
F047CH	CAN receive buffer register 13DL[Note 2]	RMDF213L	RMDF213	R	—	√	√	0000H
F047DH		RMDF213H			—	√		
F047EH	CAN receive buffer register 13DH[Note 2]	RMDF313L	RMDF313	R	—	√	√	0000H
F047FH		RMDF313H			—	√		
F0480H	CAN receive buffer register 14AL[Note 2]	RMIDL14L	RMIDL14	R	—	√	√	0000H
F0481H		RMIDL14H			—	√		
F0482H	CAN receive buffer register 14AH[Note 2]	RMIDH14L	RMIDH14	R	—	√	√	0000H
F0483H		RMIDH14H			—	√		
F0484H	CAN receive buffer register 14BL[Note 2]	RMTS14L	RMTS14	R	—	√	√	0000H
F0485H		RMTS14H			—	√		
F0486H	CAN receive buffer register 14BH[Note 2]	RMPTR14L	RMPTR14	R	—	√	√	0000H
F0487H		RMPTR14H			—	√		
F0488H	CAN receive buffer register 14CL[Note 2]	RMDF014L	RMDF014	R	—	√	√	0000H
F0489H		RMDF014H			—	√		
F048AH	CAN receive buffer register 14CH[Note 2]	RMDF114L	RMDF114	R	—	√	√	0000H
F048BH		RMDF114H			—	√		
F048CH	CAN receive buffer register 14DL[Note 2]	RMDF214L	RMDF214	R	—	√	√	0000H
F048DH		RMDF214H			—	√		
F048EH	CAN receive buffer register 14DH[Note 2]	RMDF314L	RMDF314	R	—	√	√	0000H
F048FH		RMDF314H			—	√		
F0490H	CAN receive buffer register 15AL[Note 2]	RMIDL15L	RMIDL15	R	—	√	√	0000H
F0491H		RMIDL15H			—	√		
F0492H	CAN receive buffer register 15AH[Note 2]	RMIDH15L	RMIDH15	R	—	√	√	0000H
F0493H		RMIDH15H			—	√		
F0494H	CAN receive buffer register 15BL[Note 2]	RMTS15L	RMTS15	R	—	√	√	0000H
F0495H		RMTS15H			—	√		
F0496H	CAN receive buffer register 15BH[Note 2]	RMPTR15L	RMPTR15	R	—	√	√	0000H
F0497H		RMPTR15H			—	√		
F0498H	CAN receive buffer register 15CL[Note 2]	RMDF015L	RMDF015	R	—	√	√	0000H
F0499H		RMDF015H			—	√		
F049AH	CAN receive buffer register 15CH[Note 2]	RMDF115L	RMDF115	R	—	√	√	0000H
F049BH		RMDF115H			—	√		
F049CH	CAN receive buffer register 15DL[Note 2]	RMDF215L	RMDF215	R	—	√	√	0000H
F049DH		RMDF215H			—	√		
F049EH	CAN receive buffer register 15DH[Note 2]	RMDF315L	RMDF315	R	—	√	√	0000H
F049FH		RMDF315H			—	√		
F0580H	CAN RAM test register 0[Note 1]	RPGACC0L	RPGACC0	R/W	—	√	√	0000H
F0581H		RPGACC0H			—	√		
F0582H	CAN RAM test register 1[Note 1]	RPGACC1L	RPGACC1	R/W	—	√	√	0000H
F0583H		RPGACC1H			—	√		
F0584H	CAN RAM test register 2[Note 1]	RPGACC2L	RPGACC2	R/W	—	√	√	0000H
F0585H		RPGACC2H			—	√		
F0586H	CAN RAM test register 3[Note 1]	RPGACC3L	RPGACC3	R/W	—	√	√	0000H
F0587H		RPGACC3H			—	√		

Notes 1. These registers are allocated to RAM window 0 for the CAN module (receive rules and CAN RAM test register). When setting these registers, set the RPAGE bit in the GRWCR register to 0.

2. These registers are allocated to RAM window 1 for the CAN module (receive buffer, receive FIFO buffer, transmit/receive FIFO buffer, transmit buffer, and transmit history data). When setting these registers, set the RPAGE bit in the GRWCR register to 1.

Table 18-3. List of CAN Module Registers (14/22)

Address	Special Function Register (SFR) Name	Symbol		R/W	Access Size			After Reset
					1 bit	8 bits	16 bits	
F0588H	CAN RAM test register 4[Note 1]	RPGACC4L	RPGACC4	R/W	—	√	√	0000H
F0589H		RPGACC4H			—	√		
F058AH	CAN RAM test register 5[Note 1]	RPGACC5L	RPGACC5	R/W	—	√	√	0000H
F058BH		RPGACC5H			—	√		
F058CH	CAN RAM test register 6[Note 1]	RPGACC6L	RPGACC6	R/W	—	√	√	0000H
F058DH		RPGACC6H			—	√		
F058EH	CAN RAM test register 7[Note 1]	RPGACC7L	RPGACC7	R/W	—	√	√	0000H
F058FH		RPGACC7H			—	√		
F0590H	CAN RAM test register 8[Note 1]	RPGACC8L	RPGACC8	R/W	—	√	√	0000H
F0591H		RPGACC8H			—	√		
F0592H	CAN RAM test register 9[Note 1]	RPGACC9L	RPGACC9	R/W	—	√	√	0000H
F0593H		RPGACC9H			—	√		
F0594H	CAN RAM test register 10[Note 1]	RPGACC10L	RPGACC10	R/W	—	√	√	0000H
F0595H		RPGACC10H			—	√		
F0596H	CAN RAM test register 11[Note 1]	RPGACC11L	RPGACC11	R/W	—	√	√	0000H
F0597H		RPGACC11H			—	√		
F0598H	CAN RAM test register 12[Note 1]	RPGACC12L	RPGACC12	R/W	—	√	√	0000H
F0599H		RPGACC12H			—	√		
F059AH	CAN RAM test register 13[Note 1]	RPGACC13L	RPGACC13	R/W	—	√	√	0000H
F059BH		RPGACC13H			—	√		
F059CH	CAN RAM test register 14[Note 1]	RPGACC14L	RPGACC14	R/W	—	√	√	0000H
F059DH		RPGACC14H			—	√		
F059EH	CAN RAM test register 15[Note 1]	RPGACC15L	RPGACC15	R/W	—	√	√	0000H
F059FH		RPGACC15H			—	√		
F05A0H	CAN RAM test register 16[Note 1]	RPGACC16L	RPGACC16	R/W	—	√	√	0000H
F05A1H		RPGACC16H			—	√		
F05A0H	CAN receive FIFO access register 0AL[Note 2]	RFIDL0L	RFIDL0	R	—	√	√	0000H
F05A1H		RFIDL0H			—	√		
F05A2H	CAN RAM test register 17[Note 1]	RPGACC17L	RPGACC17	R/W	—	√	√	0000H
F05A3H		RPGACC17H			—	√		
F05A2H	CAN receive FIFO access register 0AH[Note 2]	RFIDH0L	RFIDH0	R	—	√	√	0000H
F05A3H		RFIDH0H			—	√		
F05A4H	CAN RAM test register 18[Note 1]	RPGACC18L	RPGACC18	R/W	—	√	√	0000H
F05A5H		RPGACC18H			—	√		
F05A4H	CAN receive FIFO access register 0BL[Note 2]	RFTS0L	RFTS0	R	—	√	√	0000H
F05A5H		RFTS0H			—	√		
F05A6H	CAN RAM test register 19[Note 1]	RPGACC19L	RPGACC19	R/W	—	√	√	0000H
F05A7H		RPGACC19H			—	√		
F05A6H	CAN receive FIFO access register 0BH[Note 2]	RFPTR0L	RFPTR0	R	—	√	√	0000H
F05A7H		RFPTR0H			—	√		
F05A8H	CAN RAM test register 20[Note 1]	RPGACC20L	RPGACC20	R/W	—	√	√	0000H
F05A9H		RPGACC20H			—	√		
F05A8H	CAN receive FIFO access register 0CL[Note 2]	RFDF00L	RFDF00	R	—	√	√	0000H
F05A9H		RFDF00H			—	√		
F05AAH	CAN RAM test register 21[Note 1]	RPGACC21L	RPGACC21	R/W	—	√	√	0000H
F05ABH		RPGACC21H			—	√		

Notes 1. These registers are allocated to RAM window 0 for the CAN module (receive rules and CAN RAM test register). When setting these registers, set the RPAGE bit in the GRWCR register to 0.

2. These registers are allocated to RAM window 1 for the CAN module (receive buffer, receive FIFO buffer, transmit/receive FIFO buffer, transmit buffer, and transmit history data). When setting these registers, set the RPAGE bit in the GRWCR register to 1.

Table 18-3. List of CAN Module Registers (15/22)

Address	Special Function Register (SFR) Name	Symbol		R/W	Access Size			After Reset
					1 bit	8 bits	16 bits	
F05AAH	CAN receive FIFO access register 0CH[Note 2]	RFDF10L	RFDF10	R	—	√	√	0000H
F05ABH		RFDF10H			—	√		
F05ACH	CAN RAM test register 22[Note 1]	RPGACC22L	RPGACC22	R/W	—	√	√	0000H
F05ADH		RPGACC22H			—	√		
F05ACH	CAN receive FIFO access register 0DL[Note 2]	RFDF20L	RFDF20	R	—	√	√	0000H
F05ADH		RFDF20H			—	√		
F05AEH	CAN RAM test register 23[Note 1]	RPGACC23L	RPGACC23	R/W	—	√	√	0000H
F05AFH		RPGACC23H			—	√		
F05AEH	CAN receive FIFO access register 0DH[Note 2]	RFDF30L	RFDF30	R	—	√	√	0000H
F05AFH		RFDF30H			—	√		
F05B0H	CAN RAM test register 24[Note 1]	RPGACC24L	RPGACC24	R/W	—	√	√	0000H
F05B1H		RPGACC24H			—	√		
F05B0H	CAN receive FIFO access register 1AL[Note 2]	RFIDL1L	RFIDL1	R	—	√	√	0000H
F05B1H		RFIDL1H			—	√		
F05B2H	CAN RAM test register 25[Note 1]	RPGACC25L	RPGACC25	R/W	—	√	√	0000H
F05B3H		RPGACC25H			—	√		
F05B2H	CAN receive FIFO access register 1AH[Note 2]	RFIDH1L	RFIDH1	R	—	√	√	0000H
F05B3H		RFIDH1H			—	√		
F05B4H	CAN RAM test register 26[Note 1]	RPGACC26L	RPGACC26	R/W	—	√	√	0000H
F05B5H		RPGACC26H			—	√		
F05B4H	CAN receive FIFO access register 1BL[Note 2]	RFTS1L	RFTS1	R	—	√	√	0000H
F05B5H		RFTS1H			—	√		
F05B6H	CAN RAM test register 27[Note 1]	RPGACC27L	RPGACC27	R/W	—	√	√	0000H
F05B7H		RPGACC27H			—	√		
F05B6H	CAN receive FIFO access register 1BH[Note 2]	RFPTR1L	RFPTR1	R	—	√	√	0000H
F05B7H		RFPTR1H			—	√		
F05B8H	CAN RAM test register 28[Note 1]	RPGACC28L	RPGACC28	R/W	—	√	√	0000H
F05B9H		RPGACC28H			—	√		
F05B8H	CAN receive FIFO access register 1CL[Note 2]	RFDF01L	RFDF01	R	—	√	√	0000H
F05B9H		RFDF01H			—	√		
F05BAH	CAN RAM test register 29[Note 1]	RPGACC29L	RPGACC29	R/W	—	√	√	0000H
F05BBH		RPGACC29H			—	√		
F05BAH	CAN receive FIFO access register 1CH[Note 2]	RFDF11L	RFDF11	R	—	√	√	0000H
F05BBH		RFDF11H			—	√		
F05BCH	CAN RAM test register 30[Note 1]	RPGACC30L	RPGACC30	R/W	—	√	√	0000H
F05BDH		RPGACC30H			—	√		
F05BCH	CAN receive FIFO access register 1DL[Note 2]	RFDF21L	RFDF21	R	—	√	√	0000H
F05BDH		RFDF21H			—	√		
F05BEH	CAN RAM test register 31[Note 1]	RPGACC31L	RPGACC31	R/W	—	√	√	0000H
F05BFH		RPGACC31H			—	√		
F05BEH	CAN receive FIFO access register 1DH[Note 2]	RFDF31L	RFDF31	R	—	√	√	0000H
F05BFH		RFDF31H			—	√		
F05C0H	CAN RAM test register 32[Note 1]	RPGACC32L	RPGACC32	R/W	—	√	√	0000H
F05C1H		RPGACC32H			—	√		
F05C2H	CAN RAM test register 33[Note 1]	RPGACC33L	RPGACC33	R/W	—	√	√	0000H
F05C3H		RPGACC33H			—	√		

Notes 1. These registers are allocated to RAM window 0 for the CAN module (receive rules and CAN RAM test register). When setting these registers, set the RPAGE bit in the GRWCR register to 0.

2. These registers are allocated to RAM window 1 for the CAN module (receive buffer, receive FIFO buffer, transmit/receive FIFO buffer, transmit buffer, and transmit history data). When setting these registers, set the RPAGE bit in the GRWCR register to 1.

Table 18-3. List of CAN Module Registers (16/22)

Address	Special Function Register (SFR) Name	Symbol		R/W	Access Size			After Reset
					1 bit	8 bits	16 bits	
F05C4H	CAN RAM test register 34[Note 1]	RPGACC34L	RPGACC34	R/W	—	√	√	0000H
F05C5H		RPGACC34H			—	√		
F05C6H	CAN RAM test register 35[Note 1]	RPGACC35L	RPGACC35	R/W	—	√	√	0000H
F05C7H		RPGACC35H			—	√		
F05C8H	CAN RAM test register 36[Note 1]	RPGACC36L	RPGACC36	R/W	—	√	√	0000H
F05C9H		RPGACC36H			—	√		
F05CAH	CAN RAM test register 37[Note 1]	RPGACC37L	RPGACC37	R/W	—	√	√	0000H
F05CBH		RPGACC37H			—	√		
F05CCH	CAN RAM test register 38[Note 1]	RPGACC38L	RPGACC38	R/W	—	√	√	0000H
F05CDH		RPGACC38H			—	√		
F05CEH	CAN RAM test register 39[Note 1]	RPGACC39L	RPGACC39	R/W	—	√	√	0000H
F05CFH		RPGACC39H			—	√		
F05D0H	CAN RAM test register 40[Note 1]	RPGACC40L	RPGACC40	R/W	—	√	√	0000H
F05D1H		RPGACC40H			—	√		
F05D2H	CAN RAM test register 41[Note 1]	RPGACC41L	RPGACC41	R/W	—	√	√	0000H
F05D3H		RPGACC41H			—	√		
F05D4H	CAN RAM test register 42[Note 1]	RPGACC42L	RPGACC42	R/W	—	√	√	0000H
F05D5H		RPGACC42H			—	√		
F05D6H	CAN RAM test register 43[Note 1]	RPGACC43L	RPGACC43	R/W	—	√	√	0000H
F05D7H		RPGACC43H			—	√		
F05D8H	CAN RAM test register 44[Note 1]	RPGACC44L	RPGACC44	R/W	—	√	√	0000H
F05D9H		RPGACC44H			—	√		
F05DAH	CAN RAM test register 45[Note 1]	RPGACC45L	RPGACC45	R/W	—	√	√	0000H
F05DBH		RPGACC45H			—	√		
F05DCH	CAN RAM test register 46[Note 1]	RPGACC46L	RPGACC46	R/W	—	√	√	0000H
F05DDH		RPGACC46H			—	√		
F05DEH	CAN RAM test register 47[Note 1]	RPGACC47L	RPGACC47	R/W	—	√	√	0000H
F05DFH		RPGACC47H			—	√		
F05E0H	CAN RAM test register 48[Note 1]	RPGACC48L	RPGACC48	R/W	—	√	√	0000H
F05E1H		RPGACC48H			—	√		
F05E0H	CAN0 transmit/receive FIFO access register 0AL[Note 2]	CFIDL0L	CFIDL0	R/W	—	√	√	0000H
F05E1H		CFIDL0H			—	√		
F05E2H	CAN RAM test register 49[Note 1]	RPGACC49L	RPGACC49	R/W	—	√	√	0000H
F05E3H		RPGACC49H			—	√		
F05E2H	CAN0 transmit/receive FIFO access register 0AH[Note 2]	CFIDH0L	CFIDH0	R/W	—	√	√	0000H
F05E3H		CFIDH0H			—	√		
F05E4H	CAN RAM test register 50[Note 1]	RPGACC50L	RPGACC50	R/W	—	√	√	0000H
F05E5H		RPGACC50H			—	√		
F05E4H	CAN0 transmit/receive FIFO access register 0BL[Note 2]	CFTS0L	CFTS0	R	—	√	√	0000H
F05E5H		CFTS0H			—	√		
F05E6H	CAN RAM test register 51[Note 1]	RPGACC51L	RPGACC51	R/W	—	√	√	0000H
F05E7H		RPGACC51H			—	√		

Notes 1. These registers are allocated to RAM window 0 for the CAN module (receive rules and CAN RAM test register). When setting these registers, set the RPAGE bit in the GRWCR register to 0.

2. These registers are allocated to RAM window 1 for the CAN module (receive buffer, receive FIFO buffer, transmit/receive FIFO buffer, transmit buffer, and transmit history data). When setting these registers, set the RPAGE bit in the GRWCR register to 1.

Table 18-3. List of CAN Module Registers (17/22)

Address	Special Function Register (SFR) Name	Symbol		R/W	Access Size			After Reset
					1 bit	8 bits	16 bits	
F05E6H	CAN0 transmit/receive FIFO access register 0BH[Note 2]	CFPTR0L	CFPTR0	R/W	—	√	√	0000H
F05E7H		CFPTR0H			—	√		
F05E8H	CAN RAM test register 52[Note 1]	RPGACC52L	RPGACC52	R/W	—	√	√	0000H
F05E9H		RPGACC52H			—	√		
F05E8H	CAN0 transmit/receive FIFO access register 0CL[Note 2]	CFDF00L	CFDF00	R/W	—	√	√	0000H
F05E9H		CFDF00H			—	√		
F05EAH	CAN RAM test register 53[Note 1]	RPGACC53L	RPGACC53	R/W	—	√	√	0000H
F05EBH		RPGACC53H			—	√		
F05EAH	CAN0 transmit/receive FIFO access register 0CH[Note 2]	CFDF10L	CFDF10	R/W	—	√	√	0000H
F05EBH		CFDF10H			—	√		
F05ECH	CAN RAM test register 54[Note 1]	RPGACC54L	RPGACC54	R/W	—	√	√	0000H
F05EDH		RPGACC54H			—	√		
F05ECH	CAN0 transmit/receive FIFO access register 0DL[Note 2]	CFDF20L	CFDF20	R/W	—	√	√	0000H
F05EDH		CFDF20H			—	√		
F05EEH	CAN RAM test register 55[Note 1]	RPGACC55L	RPGACC55	R/W	—	√	√	0000H
F05EFH		RPGACC55H			—	√		
F05EEH	CAN0 transmit/receive FIFO access register 0DH[Note 2]	CFDF30L	CFDF30	R/W	—	√	√	0000H
F05EFH		CFDF30H			—	√		
F05F0H	CAN RAM test register 56[Note 1]	RPGACC56L	RPGACC56	R/W	—	√	√	0000H
F05F1H		RPGACC56H			—	√		
F05F2H	CAN RAM test register 57[Note 1]	RPGACC57L	RPGACC57	R/W	—	√	√	0000H
F05F3H		RPGACC57H			—	√		
F05F4H	CAN RAM test register 58[Note 1]	RPGACC58L	RPGACC58	R/W	—	√	√	0000H
F05F5H		RPGACC58H			—	√		
F05F6H	CAN RAM test register 59[Note 1]	RPGACC59L	RPGACC59	R/W	—	√	√	0000H
F05F7H		RPGACC59H			—	√		
F05F8H	CAN RAM test register 60[Note 1]	RPGACC60L	RPGACC60	R/W	—	√	√	0000H
F05F9H		RPGACC60H			—	√		
F05FAH	CAN RAM test register 61[Note 1]	RPGACC61L	RPGACC61	R/W	—	√	√	0000H
F05FBH		RPGACC61H			—	√		
F05FCH	CAN RAM test register 62[Note 1]	RPGACC62L	RPGACC62	R/W	—	√	√	0000H
F05FDH		RPGACC62H			—	√		
F05FEH	CAN RAM test register 63[Note 1]	RPGACC63L	RPGACC63	R/W	—	√	√	0000H
F05FFH		RPGACC63H			—	√		
F0600H	CAN RAM test register 64[Note 1]	RPGACC64L	RPGACC64	R/W	—	√	√	0000H
F0601H		RPGACC64H			—	√		
F0600H	CAN0 transmit buffer register 0AL[Note 2]	TMIDL0L	TMIDL0	R/W	—	√	√	0000H
F0601H		TMIDL0H			—	√		
F0602H	CAN RAM test register 65[Note 1]	RPGACC65L	RPGACC65	R/W	—	√	√	0000H
F0603H		RPGACC65H			—	√		
F0602H	CAN0 transmit buffer register 0AH[Note 2]	TMIDH0L	TMIDH0	R/W	—	√	√	0000H
F0603H		TMIDH0H			—	√		

Notes 1. These registers are allocated to RAM window 0 for the CAN module (receive rules and CAN RAM test register). When setting these registers, set the RPAGE bit in the GRWCR register to 0.

2. These registers are allocated to RAM window 1 for the CAN module (receive buffer, receive FIFO buffer, transmit/receive FIFO buffer, transmit buffer, and transmit history data). When setting these registers, set the RPAGE bit in the GRWCR register to 1.

Table 18-3. List of CAN Module Registers (18/22)

Address	Special Function Register (SFR) Name	Symbol		R/W	Access Size			After Reset
					1 bit	8 bits	16 bits	
F0604H	CAN RAM test register 66[Note 1]	RPGACC66L	RPGACC66	R/W	—	√	√	0000H
F0605H		RPGACC66H			—	√		
F0606H	CAN RAM test register 67[Note 1]	RPGACC67L	RPGACC67	R/W	—	√	√	0000H
F0607H		RPGACC67H			—	√		
F0606H	CAN0 transmit buffer register 0BH[Note 2]	TMPTR0L	TMPTR0	R/W	—	√	√	0000H
F0607H		TMPTR0H			—	√		
F0608H	CAN RAM test register 68[Note 1]	RPGACC68L	RPGACC68	R/W	—	√	√	0000H
F0609H		RPGACC68H			—	√		
F0608H	CAN0 transmit buffer register 0CL[Note 2]	TMDF00L	TMDF00	R/W	—	√	√	0000H
F0609H		TMDF00H			—	√		
F060AH	CAN RAM test register 69[Note 1]	RPGACC69L	RPGACC69	R/W	—	√	√	0000H
F060BH		RPGACC69H			—	√		
F060AH	CAN0 transmit buffer register 0CH[Note 2]	TMDF10L	TMDF10	R/W	—	√	√	0000H
F060BH		TMDF10H			—	√		
F060CH	CAN RAM test register 70[Note 1]	RPGACC70L	RPGACC70	R/W	—	√	√	0000H
F060DH		RPGACC70H			—	√		
F060CH	CAN0 transmit buffer register 0DL[Note 2]	TMDF20L	TMDF20	R/W	—	√	√	0000H
F060DH		TMDF20H			—	√		
F060EH	CAN RAM test register 71[Note 1]	RPGACC71L	RPGACC71	R/W	—	√	√	0000H
F060FH		RPGACC71H			—	√		
F060EH	CAN0 transmit buffer register 0DH[Note 2]	TMDF30L	TMDF30	R/W	—	√	√	0000H
F060FH		TMDF30H			—	√		
F0610H	CAN RAM test register 72[Note 1]	RPGACC72L	RPGACC72	R/W	—	√	√	0000H
F0611H		RPGACC72H			—	√		
F0610H	CAN0 transmit buffer register 1AL[Note 2]	TMIDL1L	TMIDL1	R/W	—	√	√	0000H
F0611H		TMIDL1H			—	√		
F0612H	CAN RAM test register 73[Note 1]	RPGACC73L	RPGACC73	R/W	—	√	√	0000H
F0613H		RPGACC73H			—	√		
F0612H	CAN0 transmit buffer register 1AH[Note 2]	TMIDH1L	TMIDH1	R/W	—	√	√	0000H
F0613H		TMIDH1H			—	√		
F0614H	CAN RAM test register 74[Note 1]	RPGACC74L	RPGACC74	R/W	—	√	√	0000H
F0615H		RPGACC74H			—	√		
F0616H	CAN RAM test register 75[Note 1]	RPGACC75L	RPGACC75	R/W	—	√	√	0000H
F0617H		RPGACC75H			—	√		
F0616H	CAN0 transmit buffer register 1BH[Note 2]	TMPTR1L	TMPTR1	R/W	—	√	√	0000H
F0617H		TMPTR1H			—	√		
F0618H	CAN RAM test register 76[Note 1]	RPGACC76L	RPGACC76	R/W	—	√	√	0000H
F0619H		RPGACC76H			—	√		
F0618H	CAN0 transmit buffer register 1CL[Note 2]	TMDF01L	TMDF01	R/W	—	√	√	0000H
F0619H		TMDF01H			—	√		
F061AH	CAN RAM test register 77[Note 1]	RPGACC77L	RPGACC77	R/W	—	√	√	0000H
F061BH		RPGACC77H			—	√		

Notes 1. These registers are allocated to RAM window 0 for the CAN module (receive rules and CAN RAM test register). When setting these registers, set the RPAGE bit in the GRWCR register to 0.

2. These registers are allocated to RAM window 1 for the CAN module (receive buffer, receive FIFO buffer, transmit/receive FIFO buffer, transmit buffer, and transmit history data). When setting these registers, set the RPAGE bit in the GRWCR register to 1.

Table 18-3. List of CAN Module Registers (19/22)

Address	Special Function Register (SFR) Name	Symbol		R/W	Access Size			After Reset
					1 bit	8 bits	16 bits	
F061AH	CAN0 transmit buffer register 1CH[Note 2]	TMDF11L	TMDF11	R/W	—	√	√	0000H
F061BH		TMDF11H			—	√		
F061CH	CAN RAM test register 78[Note 1]	RPGACC78L	RPGACC78	R/W	—	√	√	0000H
F061DH		RPGACC78H			—	√		
F061CH	CAN0 transmit buffer register 1DL[Note 2]	TMDF21L	TMDF21	R/W	—	√	√	0000H
F061DH		TMDF21H			—	√		
F061EH	CAN RAM test register 79[Note 1]	RPGACC79L	RPGACC79	R/W	—	√	√	0000H
F061FH		RPGACC79H			—	√		
F061EH	CAN0 transmit buffer register 1DH[Note 2]	TMDF31L	TMDF31	R/W	—	√	√	0000H
F061FH		TMDF31H			—	√		
F0620H	CAN RAM test register 80[Note 1]	RPGACC80L	RPGACC80	R/W	—	√	√	0000H
F0621H		RPGACC80H			—	√		
F0620H	CAN0 transmit buffer register 2AL[Note 2]	TMIDL2L	TMIDL2	R/W	—	√	√	0000H
F0621H		TMIDL2H			—	√		
F0622H	CAN RAM test register 81[Note 1]	RPGACC81L	RPGACC81	R/W	—	√	√	0000H
F0623H		RPGACC81H			—	√		
F0622H	CAN0 transmit buffer register 2AH[Note 2]	TMIDH2L	TMIDH2	R/W	—	√	√	0000H
F0623H		TMIDH2H			—	√		
F0624H	CAN RAM test register 82[Note 1]	RPGACC82L	RPGACC82	R/W	—	√	√	0000H
F0625H		RPGACC82H			—	√		
F0626H	CAN RAM test register 83[Note 1]	RPGACC83L	RPGACC83	R/W	—	√	√	0000H
F0627H		RPGACC83H			—	√		
F0626H	CAN0 transmit buffer register 2BH[Note 2]	TMPTR2L	TMPTR2	R/W	—	√	√	0000H
F0627H		TMPTR2H			—	√		
F0628H	CAN RAM test register 84[Note 1]	RPGACC84L	RPGACC84	R/W	—	√	√	0000H
F0629H		RPGACC84H			—	√		
F0628H	CAN0 transmit buffer register 2CL[Note 2]	TMDF02L	TMDF02	R/W	—	√	√	0000H
F0629H		TMDF02H			—	√		
F062AH	CAN RAM test register 85[Note 1]	RPGACC85L	RPGACC85	R/W	—	√	√	0000H
F062BH		RPGACC85H			—	√		
F062AH	CAN0 transmit buffer register 2CH[Note 2]	TMDF12L	TMDF12	R/W	—	√	√	0000H
F062BH		TMDF12H			—	√		
F062CH	CAN RAM test register 86[Note 1]	RPGACC86L	RPGACC86	R/W	—	√	√	0000H
F062DH		RPGACC86H			—	√		
F062CH	CAN0 transmit buffer register 2DL[Note 2]	TMDF22L	TMDF22	R/W	—	√	√	0000H
F062DH		TMDF22H			—	√		
F062EH	CAN RAM test register 87[Note 1]	RPGACC87L	RPGACC87	R/W	—	√	√	0000H
F062FH		RPGACC87H			—	√		
F062EH	CAN0 transmit buffer register 2DH[Note 2]	TMDF32L	TMDF32	R/W	—	√	√	0000H
F062FH		TMDF32H			—	√		
F0630H	CAN RAM test register 88[Note 1]	RPGACC88L	RPGACC88	R/W	—	√	√	0000H
F0631H		RPGACC88H			—	√		

Notes 1. These registers are allocated to RAM window 0 for the CAN module (receive rules and CAN RAM test register). When setting these registers, set the RPAGE bit in the GRWCR register to 0.

2. These registers are allocated to RAM window 1 for the CAN module (receive buffer, receive FIFO buffer, transmit/receive FIFO buffer, transmit buffer, and transmit history data). When setting these registers, set the RPAGE bit in the GRWCR register to 1.

Table 18-3. List of CAN Module Registers (20/22)

Address	Special Function Register (SFR) Name	Symbol		R/W	Access Size			After Reset
					1 bit	8 bits	16 bits	
F0630H	CAN0 transmit buffer register 3AL[Note 2]	TMIDL3L	TMIDL3	R/W	—	√	√	0000H
F0631H		TMIDL3H			—	√		
F0632H	CAN RAM test register 89[Note 1]	RPGACC89L	RPGACC89	R/W	—	√	√	0000H
F0633H		RPGACC89H			—	√		
F0632H	CAN0 transmit buffer register 3AH[Note 2]	TMIDH3L	TMIDH3	R/W	—	√	√	0000H
F0633H		TMIDH3H			—	√		
F0634H	CAN RAM test register 90[Note 1]	RPGACC90L	RPGACC90	R/W	—	√	√	0000H
F0635H		RPGACC90H			—	√		
F0636H	CAN RAM test register 91[Note 1]	RPGACC91L	RPGACC91	R/W	—	√	√	0000H
F0637H		RPGACC91H			—	√		
F0636H	CAN0 transmit buffer register 3BH[Note 2]	TMPTR3L	TMPTR3	R/W	—	√	√	0000H
F0637H		TMPTR3H			—	√		
F0638H	CAN RAM test register 92[Note 1]	RPGACC92L	RPGACC92	R/W	—	√	√	0000H
F0639H		RPGACC92H			—	√		
F0638H	CAN0 transmit buffer register 3CL[Note 2]	TMDF03L	TMDF03	R/W	—	√	√	0000H
F0639H		TMDF03H			—	√		
F063AH	CAN RAM test register 93[Note 1]	RPGACC93L	RPGACC93	R/W	—	√	√	0000H
F063BH		RPGACC93H			—	√		
F063AH	CAN0 transmit buffer register 3CH[Note 2]	TMDF13L	TMDF13	R/W	—	√	√	0000H
F063BH		TMDF13H			—	√		
F063CH	CAN RAM test register 94[Note 1]	RPGACC94L	RPGACC94	R/W	—	√	√	0000H
F063DH		RPGACC94H			—	√		
F063CH	CAN0 transmit buffer register 3DL[Note 2]	TMDF23L	TMDF23	R/W	—	√	√	0000H
F063DH		TMDF23H			—	√		
F063EH	CAN RAM test register 95[Note 1]	RPGACC95L	RPGACC95	R/W	—	√	√	0000H
F063FH		RPGACC95H			—	√		
F063EH	CAN0 transmit buffer register 3DH[Note 2]	TMDF33L	TMDF33	R/W	—	√	√	0000H
F063FH		TMDF33H			—	√		
F0640H	CAN RAM test register 96[Note 1]	RPGACC96L	RPGACC96	R/W	—	√	√	0000H
F0641H		RPGACC96H			—	√		
F0642H	CAN RAM test register 97[Note 1]	RPGACC97L	RPGACC97	R/W	—	√	√	0000H
F0643H		RPGACC97H			—	√		
F0644H	CAN RAM test register 98[Note 1]	RPGACC98L	RPGACC98	R/W	—	√	√	0000H
F0645H		RPGACC98H			—	√		
F0646H	CAN RAM test register 99[Note 1]	RPGACC99L	RPGACC99	R/W	—	√	√	0000H
F0647H		RPGACC99H			—	√		
F0648H	CAN RAM test register 100[Note 1]	RPGACC100L	RPGACC100	R/W	—	√	√	0000H
F0649H		RPGACC100H			—	√		
F064AH	CAN RAM test register 101[Note 1]	RPGACC101L	RPGACC101	R/W	—	√	√	0000H
F064BH		RPGACC101H			—	√		
F064CH	CAN RAM test register 102[Note 1]	RPGACC102L	RPGACC102	R/W	—	√	√	0000H
F064DH		RPGACC102H			—	√		

Notes 1. These registers are allocated to RAM window 0 for the CAN module (receive rules and CAN RAM test register). When setting these registers, set the RPAGE bit in the GRWCR register to 0.

2. These registers are allocated to RAM window 1 for the CAN module (receive buffer, receive FIFO buffer, transmit/receive FIFO buffer, transmit buffer, and transmit history data). When setting these registers, set the RPAGE bit in the GRWCR register to 1.

Table 18-3. List of CAN Module Registers (21/22)

Address	Special Function Register (SFR) Name	Symbol		R/W	Access Size			After Reset
					1 bit	8 bits	16 bits	
F064EH	CAN RAM test register 103[Note]	RPGACC103L	RPGACC103	R/W	—	√	√	0000H
F064FH		RPGACC103H			—	√		
F0650H	CAN RAM test register 104[Note]	RPGACC104L	RPGACC104	R/W	—	√	√	0000H
F0651H		RPGACC104H			—	√		
F0652H	CAN RAM test register 105[Note]	RPGACC105L	RPGACC105	R/W	—	√	√	0000H
F0653H		RPGACC105H			—	√		
F0654H	CAN RAM test register 106[Note]	RPGACC106L	RPGACC106	R/W	—	√	√	0000H
F0655H		RPGACC106H			—	√		
F0656H	CAN RAM test register 107[Note]	RPGACC107L	RPGACC107	R/W	—	√	√	0000H
F0657H		RPGACC107H			—	√		
F0658H	CAN RAM test register 108[Note]	RPGACC108L	RPGACC108	R/W	—	√	√	0000H
F0659H		RPGACC108H			—	√		
F065AH	CAN RAM test register 109[Note]	RPGACC109L	RPGACC109	R/W	—	√	√	0000H
F065BH		RPGACC109H			—	√		
F065CH	CAN RAM test register 110[Note]	RPGACC110L	RPGACC110	R/W	—	√	√	0000H
F065DH		RPGACC110H			—	√		
F065EH	CAN RAM test register 111[Note]	RPGACC111L	RPGACC111	R/W	—	√	√	0000H
F065FH		RPGACC111H			—	√		
F0660H	CAN RAM test register 112[Note]	RPGACC112L	RPGACC112	R/W	—	√	√	0000H
F0661H		RPGACC112H			—	√		
F0662H	CAN RAM test register 113[Note]	RPGACC113L	RPGACC113	R/W	—	√	√	0000H
F0663H		RPGACC113H			—	√		
F0664H	CAN RAM test register 114[Note]	RPGACC114L	RPGACC114	R/W	—	√	√	0000H
F0665H		RPGACC114H			—	√		
F0666H	CAN RAM test register 115[Note]	RPGACC115L	RPGACC115	R/W	—	√	√	0000H
F0667H		RPGACC115H			—	√		
F0668H	CAN RAM test register 116[Note]	RPGACC116L	RPGACC116	R/W	—	√	√	0000H
F0669H		RPGACC116H			—	√		
F066AH	CAN RAM test register 117[Note]	RPGACC117L	RPGACC117	R/W	—	√	√	0000H
F066BH		RPGACC117H			—	√		
F066CH	CAN RAM test register 118[Note]	RPGACC118L	RPGACC118	R/W	—	√	√	0000H
F066DH		RPGACC118H			—	√		
F066EH	CAN RAM test register 119[Note]	RPGACC119L	RPGACC119	R/W	—	√	√	0000H
F066FH		RPGACC119H			—	√		
F0670H	CAN RAM test register 120[Note]	RPGACC120L	RPGACC120	R/W	—	√	√	0000H
F0671H		RPGACC120H			—	√		
F0672H	CAN RAM test register 121[Note]	RPGACC121L	RPGACC121	R/W	—	√	√	0000H
F0673H		RPGACC121H			—	√		
F0674H	CAN RAM test register 122[Note]	RPGACC122L	RPGACC122	R/W	—	√	√	0000H
F0675H		RPGACC122H			—	√		
F0676H	CAN RAM test register 123[Note]	RPGACC123L	RPGACC123	R/W	—	√	√	0000H
F0677H		RPGACC123H			—	√		
F0678H	CAN RAM test register 124[Note]	RPGACC124L	RPGACC124	R/W	—	√	√	0000H
F0679H		RPGACC124H			—	√		

Note These registers are allocated to RAM window 0 for the CAN module (receive rules and CAN RAM test register). When setting these registers, set the RPAGE bit in the GRWCR register to 0.

Table 18-3. List of CAN Module Registers (22/22)

Address	Special Function Register (SFR) Name	Symbol		R/W	Access Size			After Reset
					1 bit	8 bits	16 bits	
F067AH	CAN RAM test register 125[Note 1]	RPGACC125L	RPGACC125	R/W	—	√	√	0000H
F067BH		RPGACC125H			—	√		
F067CH	CAN RAM test register 126[Note 1]	RPGACC126L	RPGACC126	R/W	—	√	√	0000H
F067DH		RPGACC126H			—	√		
F067EH	CAN RAM test register 127[Note 1]	RPGACC127L	RPGACC127	R/W	—	√	√	0000H
F067FH		RPGACC127H			—	√		
F0680H	CAN0 transmit history buffer access register[Note 2]	THLACC0L	THLACC0	R	—	√	√	0000H
F0681H		THLACC0H			—	√		

Notes 1. These registers are allocated to RAM window 0 for the CAN module (receive rules and CAN RAM test register). When setting these registers, set the RPAGE bit in the GRWCR register to 0.

2. These registers are allocated to RAM window 1 for the CAN module (receive buffer, receive FIFO buffer, transmit/receive FIFO buffer, transmit buffer, and transmit history data). When setting these registers, set the RPAGE bit in the GRWCR register to 1.

18.3.1 CANi Bit Configuration Register L (CiCFGL) (i = 0)

Address C0CFGLL: F0300H, C0CFGLH: F0301H

	b15	b14	b13	b12	b11	b10	b9	b8	b7	b6	b5	b4	b3	b2	b1	b0
	—	—	—	—	—	—	BRP[9:0]									
After Reset	0	0	0	0	0	0	0	0	0	0	0	0	0	0	0	0

Bit	Symbol	Bit Name	Description	R/W
15 to 10	—	Reserved	These bits are always read as 0. The write value should always be 0.	R
9 to 0	BRP[9:0]	Prescaler Division Ratio Set	When these bits are set to P (0 to 1023), the baud rate prescaler divides f_{CAN} by P + 1.	R/W

Modify the CiCFGL register only in channel reset mode or channel halt mode. Set this register in channel reset mode before making a transition to channel communication mode or channel halt mode. For setting bit timing, see **18.10 Initial Settings**.

- BRP[9:0] Bits
  The CANi Tq clock (f_{CANTQi}) is obtained by the CAN clock (f_{CAN}) and setting the clock division ratio with the BRP[9:0] bits and one clock cycle of the CANi Tq clock is 1 Time Quantum (Tq).

18.3.2 CANi Bit Configuration Register H (CiCFGH) (i = 0)

Address C0CFGHL: F0302H, C0CFGHH: F0303H

	b15	b14	b13	b12	b11	b10	b9	b8	b7	b6	b5	b4	b3	b2	b1	b0
	—	—	—	—	—	—	SJW[1:0]		—	TSEG2[2:0]			TSEG1[3:0]			
After Reset	0	0	0	0	0	0	0	0	0	0	0	0	0	0	0	0

Bit	Symbol	Bit Name	Description	R/W
15 to 10	—	Reserved	These bits are always read as 0. The write value should always be 0.	R
9, 8	SJW[1:0]	Resynchronization Jump Width Control	b9 b8 0 0 : 1 Tq 0 1 : 2 Tq 1 0 : 3 Tq 1 1 : 4 Tq	R/W
7	—	Reserved	This bit is always read as 0. The write value should always be 0.	R
6 to 4	TSEG2 [2:0]	Time Segment 2 Control	b6 b5 b4 0 0 0 : Setting prohibited 0 0 1 : 2 Tq 0 1 0 : 3 Tq 0 1 1 : 4 Tq 1 0 0 : 5 Tq 1 0 1 : 6 Tq 1 1 0 : 7 Tq 1 1 1 : 8 Tq	R/W
3 to 0	TSEG1 [3:0]	Time Segment 1 Control	b3 b2 b1 b0 0 0 0 0 : Setting prohibited 0 0 0 1 : Setting prohibited 0 0 1 0 : Setting prohibited 0 0 1 1 : 4 Tq 0 1 0 0 : 5 Tq 0 1 0 1 : 6 Tq 0 1 1 0 : 7 Tq 0 1 1 1 : 8 Tq 1 0 0 0 : 9 Tq 1 0 0 1 : 10 Tq 1 0 1 0 : 11 Tq 1 0 1 1 : 12 Tq 1 1 0 0 : 13 Tq 1 1 0 1 : 14 Tq 1 1 1 0 : 15 Tq 1 1 1 1 : 16 Tq	R/W

Modify the CiCFGH register only in channel reset mode or channel halt mode. Set this register in channel reset mode before making a transition to channel communication mode or channel halt mode. For setting bit timing, see **18.10 Initial Settings**.

- SJW[1:0] Bits
  These bits are used to specify a Tq value for the resynchronization jump width. A value of 1 Tq to 4 Tq can be set. Set a value equal to or smaller than the value of the TSEG2 bits.

- TSEG2[2:0] Bits
  These bits are used to specify a Tq value for the length of phase buffer segment 2 (PHASE_SEG2).
  A value of 2 Tq to 8 Tq can be set. Set a value smaller than the value of the TSEG1 bits.

- TSEG1[3:0] Bits
  These bits are used to specify a Tq value for the total length of the propagation time segment (PROP_SEG) and phase buffer segment 1 (PHASE_SEG1). A value of 4 Tq to 16 Tq can be set.

18.3.3 CANi Control Register L (CiCTRL) (i = 0)

Address C0CTRLL: F0304H, C0CTRLH: F0305H

	b15	b14	b13	b12	b11	b10	b9	b8	b7	b6	b5	b4	b3	b2	b1	b0
	ALIE	BLIE	OLIE	BORIE	BOEIE	EPIE	EWIE	BEIE	—	—	—	—	RTBO	CSLPR	CHMDC [1:0]	
After Reset	0	0	0	0	0	0	0	0	0	0	0	0	0	1	0	1

Bit	Symbol	Bit Name	Description	R/W
15	ALIE	Arbitration Lost Interrupt Enable	0: Arbitration lost interrupt is disabled. 1: Arbitration lost interrupt is enabled.	R/W
14	BLIE	Bus Lock Interrupt Enable	0: Bus lock interrupt is disabled. 1: Bus lock interrupt is enabled.	R/W
13	OLIE	Overload Frame Transmit Interrupt Enable	0: Overload frame transmit interrupt is disabled. 1: Overload frame transmit interrupt is enabled.	R/W
12	BORIE	Bus Off Recovery Interrupt Enable	0: Bus off recovery interrupt is disabled. 1: Bus off recovery interrupt is enabled.	R/W
11	BOEIE	Bus Off Entry Interrupt Enable	0: Bus off entry interrupt is disabled. 1: Bus off entry interrupt is enabled.	R/W
10	EPIE	Error Passive Interrupt Enable	0: Error passive interrupt is disabled. 1: Error passive interrupt is enabled.	R/W
9	EWIE	Error Warning Interrupt Enable	0: Error warning interrupt is disabled. 1: Error warning interrupt is enabled.	R/W
8	BEIE	Protocol Error Interrupt Enable	0: Protocol error interrupt is disabled. 1: Protocol error interrupt is enabled.	R/W
7 to 4	—	Reserved	These bits are always read as 0. The write value should always be 0.	R
3	RTBO	Forcible Return from Bus-off	When this bit is set to 1, forcible return from the bus off state is made. This bit is always read as 0.	R/W
2	CSLPR	Channel Stop Mode	0: Other than channel stop mode 1: Channel stop mode	R/W
1, 0	CHMDC [1:0]	Mode Select	b1 b0 0 0: Channel communication mode 0 1: Channel reset mode 1 0: Channel halt mode 1 1: Setting prohibited	R/W

- ALIE Bit
  When the ALF flag in the CiERFLL register is set to 1 with the ALIE bit set to 1, an error interrupt request is generated. Modify this bit only in channel reset mode.

- BLIE Bit
  When the BLF flag in the CiERFLL register is set to 1 with the BLIE bit set to 1, an error interrupt request is generated. Modify this bit only in channel reset mode.

- OLIE Bit
  When the OVLF flag in the CiERFLL register is set to 1 with the OLIE bit set to 1, an error interrupt request is generated. Modify this bit only in channel reset mode.

- BORIE Bit
  When the BORF flag in the CiERFLL register is set to 1 with the BORIE bit set to 1, an error interrupt request is generated. Modify this bit only in channel reset mode.

- BOEIE Bit
  When the BOEF flag in the CiERFLL register is set to 1 with the BOEIE bit set to 1, an error interrupt request is generated. Modify this bit only in channel reset mode.

- EPIE Bit
  When the EPF flag in the CiERFLL register is set to 1 with the EPIE bit set to 1, an error interrupt request is generated. Modify this bit only in channel reset mode.

- EWIE Bit
  When the EWF flag in the CiERFLL register is set to 1 with the EWIE bit set to 1, an error interrupt request is generated. Modify this bit only in channel reset mode.

- BEIE Bit
  When the BEF flag in the CiERFLL register is set to 1 with the BEIE bit set to 1, an error interrupt request is generated. Modify this bit only in channel reset mode.

- RTBO Bit
  Setting this bit to 1 (forcible return from the bus off state) in the bus off state forcibly returns the state from the bus off state to the error active state. This bit is automatically cleared to 0. Setting this bit to 1 clears the TEC[7:0] and REC[7:0] bits in the CiSTSH register to H'00 and also clears the BOSTS flag in the CiSTSL register to 0 (not in bus off state). The other registers remain unchanged. No bus off recovery interrupt request due to return from the bus off state is generated. Use this bit only when the BOM[1:0] bits in the CiCTRH register are B'00 (ISO11898-1 compliant).
  A delay of up to 1 CAN bit time occurs after the RTBO bit is set to 1 until the CAN module transitions to the error active state. Set this bit to 1 in channel communication mode.

- CSLPR Bit
  Setting this bit to 1 places the channel in channel stop mode.
  Clearing this bit to 0 makes the channel leave from channel stop mode.
  Do not modify this bit while the CAN channel is in channel communication mode or channel halt mode.

- CHMDC[1:0] Bits
  These bits are used to select a channel mode (channel communication mode, channel reset mode, or channel halt mode). For details, see **18.4.2 Channel Modes.** Setting the CSLPR bit to 1 in channel reset mode allows transition to channel stop mode. Do not set the CHMDC[1:0] bits to B'11. When the CAN module has transitioned to channel halt mode depending on the setting of the BOM[1:0] bits, the CHMDC[1:0] bits automatically becomes B'10.

18.3.4 CANi Control Register H (CiCTRH) (i = 0)

Address C0CTRHL: F0306H, C0CTRHH: F0307H

	b15	b14	b13	b12	b11	b10	b9	b8	b7	b6	b5	b4	b3	b2	b1	b0
	—	—	—	—	—	CTMS[1:0]		CTME	ERRD	BOM[1:0]		—	—	—	—	TAIE
After Reset	0	0	0	0	0	0	0	0	0	0	0	0	0	0	0	0

Bit	Symbol	Bit Name	Description	R/W
15 to 11	—	Reserved	These bits are always read as 0. The write value should always be 0.	R
10, 9	CTMS[1:0]	Communication Test Mode Select	b10 b9 0 0: Standard test mode 0 1: Listen-only mode 1 0: Self-test mode 0 (external loopback mode) 1 1: Self-test mode 1 (internal loopback mode)	R/W
8	CTME	Communication Test Mode Enable	0: Communication test mode is disabled. 1: Communication test mode is enabled.	R/W
7	ERRD	Error Display Mode Select	0: Only the first error is indicated after bits 14 to 8 in the CiERFLL register have all been cleared. 1: The error flags of all errors are indicated.	R/W
6, 5	BOM[1:0]	Bus Off Recovery Mode Select	b6 b5 0 0: ISO11898-1 compliant 0 1: Entry to channel halt mode at bus-off entry 1 0: Entry to channel halt mode at bus-off end 1 1: Entry to channel halt mode (in the bus off state) by a program request	R/W
4 to 1	—	Reserved	These bits are always read as 0. The write value should always be 0.	R
0	TAIE	Transmit Abort Interrupt Enable	0: Transmit abort interrupt is disabled. 1: Transmit abort interrupt is enabled.	R/W

- CTMS[1:0] Bits
  These bits are used to select a communication test mode. Modify these bits only in channel halt mode. These bits are set to 0 in channel reset mode.

- CTME Bit
  Setting this bit to 1 enables communication test mode. Modify this bit only in channel halt mode. This bit is set to 0 in channel reset mode.

- ERRD Bit
  This bit is used to control display mode of bits 14 to 8 in the CiERFLL register.
  When this bit is clear to 0, only the flags of the first error are set to 1. If two or more errors occur first, all the flags of detected errors are set to 1.
  When this bit is set to 1, all the flags of errors that have occurred are set to 1 regardless of the error occurrence order. Modify this bit only in channel reset mode or channel halt mode.

- BOM[1:0] Bits
  These bits are used to select a bus off recovery mode of the CAN module.
  When the BOM[1:0] bits are set to B'00, return to the error active state from the bus off state is compliant with the CAN specifications. That is, the CAN module reenters the CAN communication (error active state) after 11 consecutive recessive bits are detected 128 times. A bus off recovery interrupt request is generated at the time of return from the bus off state. Even if the CHMDC[1:0] bits are set to B'10 (channel halt mode) before recessive bits are detected 128 times, the CAN module does not transition to channel halt mode until recessive bits are detected 128 times.
  When the CAN module reaches the bus off state while the BOM[1:0] bits are set to B'01, the CHMDC[1:0] bits in the CiCTRL register are set to B'10 and the CAN module transitions to channel halt mode. No bus off recovery interrupt request is generated at the time of return from the bus off state and the TEC[7:0] and REC[7:0] bits in the CiSTSH register are cleared to H'00.
  When the CAN module reaches the bus off state when the BOM[1:0] bits are set to B'10, the CHMDC[1:0] bits are set to B'10 and the CAN module transitions to channel halt mode after return from the bus off state (11 consecutive recessive bits are detected 128 times). A bus off recovery interrupt request is generated at the time of return from the bus off state and the TEC[7:0] and REC[7:0] bits are cleared to H'00.
  When the BOM[1:0] bits are set to B'11 and the CHMDC[1:0] bits are set to B'10 while the CAN module is in the bus off state, the CAN module transitions to channel halt mode. No bus off recovery interrupt request is generated at the time of return from the bus off state and the TEC[7:0] and REC[7:0] bits are cleared to H'00. However, if 11 consecutive recessive bits are detected 128 times and the CAN module has recovered to the error active state from the bus off state before the CHMDC[1:0] bits are set to B'10, a bus off recovery interrupt request is generated.
  If the CPU requests transition to channel reset mode at the same time when the CAN module transitions to channel halt mode (at bus off entry when the BOM[1:0] bits are B'01 or at bus off end when the BOM[1:0] bits are B'10), the CPU's request takes precedence. Modify these bits only in channel reset mode.

- TAIE Bit
  When transmit abort of the transmit buffer is completed with the TAIE bit set to 1, an interrupt request is generated. Modify this bit only in channel reset mode.

18.3.5 CANi Status Register L (CiSTSL) (i = 0)

Address C0STSLL: F0308H, C0STSLH: F0309H

	b15	b14	b13	b12	b11	b10	b9	b8	b7	b6	b5	b4	b3	b2	b1	b0
	—	—	—	—	—	—	—	—	COM STS	REC STS	TRM STS	BO STS	EP STS	CSLP STS	CHLT STS	CRST STS
After Reset	0	0	0	0	0	0	0	0	0	0	0	0	0	1	0	1

Bit	Symbol	Bit Name	Description	R/W
15 to 8	—	Reserved	These bits are always read as 0.	R
7	COMSTS	Communication Status Flag	0: Communication is not ready. 1: Communication is ready.	R
6	RECSTS	Receive Status Flag	0: Bus idle, in transmission or bus off state 1: In reception	R
5	TRMSTS	Transmit Status Flag	0: Bus idle or in reception 1: In transmission or bus off state	R
4	BOSTS	Bus Off Status Flag	0: Not in bus off state 1: In bus off state	R
3	EPSTS	Error Passive Status Flag	0: Not in error passive state 1: In error passive state	R
2	CSLPSTS	Channel Stop Status Flag	0: Not in channel stop mode 1: In channel stop mode	R
1	CHLTSTS	Channel Halt Status Flag	0: Not in channel halt mode 1: In channel halt mode	R
0	CRSTSTS	Channel Reset Status Flag	0: Not in channel reset mode 1: In channel reset mode	R

- COMSTS Flag
  This bit indicates that communication is ready.
  This flag becomes 1 when the CAN module has detected 11 consecutive recessive bits after it has transitioned from channel reset mode or channel halt mode to channel communication mode. This flag is cleared to 0 in channel reset mode or channel halt mode.

- RECSTS Flag
  This flag is set to 1 when reception has started, and is cleared to 0 when the bus has become idle or transmission has started.

- TRMSTS Flag
  This flag is set to 1 when transmission has started, and is cleared to 0 when the bus has become idle or reception has started. This flag remains 1 in the bus off state.

- BOSTS Flag
  This flag is set to 1 when the CAN module has entered the bus off state (TEC[7:0] value > 255), and is cleared to 0 when the CAN module has exited the bus off state.

- EPSTS Flag
  This flag is set to 1 when the CAN module has entered the error passive state (128 ≤ TEC[7:0] value ≤ 255 or 128 ≤ REC[7:0] value), and is cleared to 0 when the CAN module has exited the error passive state or has entered channel reset mode.

- CSLPSTS Flag
  This flag is set to 1 when the CAN module has transitioned to channel stop mode, and is cleared to 0 when the CAN module has returned from channel stop mode.

- CHLTSTS Flag
  This flag is set to 1 when the CAN module has transitioned to channel halt mode, and is cleared to 0 when the CAN module has exited channel halt mode.

- CRSTSTS Flag
  This flag is set to 1 when the CAN module has transitioned to channel reset mode, and is cleared to 0 when the CAN module has transitioned to channel communication mode or channel halt mode. This flag remains 1 even if the CAN module transitions from channel reset mode to channel stop mode.

18.3.6 CANi Status Register H (CiSTSH) (i = 0)

Address C0STSHL: F030AH, C0STSHH: F030BH

	b15	b14	b13	b12	b11	b10	b9	b8	b7	b6	b5	b4	b3	b2	b1	b0
	TEC[7:0]								REC[7:0]							
After Reset	0	0	0	0	0	0	0	0	0	0	0	0	0	0	0	0

Bit	Symbol	Description	Counter Value	R/W
15 to 8	TEC[7:0]	The transmit error counter (TEC) can be read.	—	R
7 to 0	REC[7:0]	The receive error counter (REC) can be read.	—	R

- TEC[7:0] Bits
  These bits indicate the transmit error counter value. For transmit error counter increment/decrement conditions, see the CAN specifications (ISO11898-1).
  These bits are cleared to 0 in channel reset mode.

- REC[7:0] Bits
  These bits indicate the receive error counter value. For receive error counter increment/decrement conditions, see the CAN specifications (ISO11898-1).
  These bits are cleared to 0 in channel reset mode.

18.3.7 CANi Error Flag Register L (CiERFLL) (i = 0)

Address C0ERFLLL: F030CH, C0ERFLLH: F030DH

	b15	b14	b13	b12	b11	b10	b9	b8	b7	b6	b5	b4	b3	b2	b1	b0
	—	ADERR	B0ERR	B1ERR	CERR	AERR	FERR	SERR	ALF	BLF	OVLF	BORF	BOEF	EPF	EWF	BEF
After Reset	0	0	0	0	0	0	0	0	0	0	0	0	0	0	0	0

Bit	Symbol	Bit Name	Description	R/W
15	—	Reserved	This bit is always read as 0. The write value should always be 0.	R
14	ADERR	ACK Delimiter Error Flag	0: No ACK delimiter error is detected. 1: ACK delimiter error is detected.	R/(W) Note
13	B0ERR	Dominant Bit Error Flag	0: No dominant bit error is detected. 1: Dominant bit error is detected.	R/(W) Note
12	B1ERR	Recessive Bit Error Flag	0: No recessive bit error is detected. 1: Recessive bit error is detected.	R/(W) Note
11	CERR	CRC Error Flag	0: No CRC error is detected. 1: CRC error is detected.	R/(W) Note
10	AERR	ACK Error Flag	0: No ACK error is detected. 1: ACK error is detected.	R/(W) Note
9	FERR	Form Error Flag	0: No form error is detected. 1: Form error is detected.	R/(W) Note
8	SERR	Stuff Error Flag	0: No stuff error is detected. 1: Stuff error is detected.	R/(W) Note
7	ALF	Arbitration Lost Flag	0: No arbitration lost is detected. 1: Arbitration lost is detected.	R/(W) Note
6	BLF	Bus Lock Flag	0: No channel bus lock is detected. 1: Channel bus lock is detected.	R/(W) Note
5	OVLF	Overload Flag	0: No overload is detected. 1: Overload is detected.	R/(W) Note
4	BORF	Bus Off Recovery Flag	0: No bus off recovery is detected. 1: Bus off recovery is detected.	R/(W) Note
3	BOEF	Bus Off Entry Flag	0: No bus off entry is detected. 1: Bus off entry is detected.	R/(W) Note
2	EPF	Error Passive Flag	0: No error passive is detected. 1: Error passive is detected.	R/(W) Note
1	EWF	Error Warning Flag	0: No error warning is detected. 1: Error warning is detected.	R/(W) Note
0	BEF	Bus Error Flag	0: No channel bus error is detected. 1: Channel bus error is detected.	R/(W) Note

Note The only effective value for writing to this flag bit is 0, which clears the bit. Otherwise writing to the bit results in retention of its state. To write 0 to this flag bit, write by using an 8-bit data transfer instruction or a 16-bit data transfer instruction.

See the CAN specifications (ISO11898-1) if you want to check error occurrence conditions. To clear each flag of this register, write 0 by the program. These flags cannot be set to 1 by the program. If any of these flags is set to 1 at the timing when the program writes 0 to the flag, the flag is set to 1. Each flag is cleared to 0 in channel reset mode.

With respect to bits 14 to 8 in the CiERFLL register, if an error is detected with all flags of bits 14 to 8 set to 0 when the ERRD bit in the CiCTRH register is set to 0 (only the first error information is displayed), the corresponding flag is set to 1.

- ADERR Flag
  This flag is set to 1 when a form error has been detected in the ACK delimiter during transmission.

- B0ERR Flag
  This flag is set to 1 when a recessive bit has been detected though a dominant bit was transmitted.

- B1ERR Flag
  This flag is set to 1 when a dominant bit has been detected though a recessive bit was transmitted.

- CERR Flag
  This flag is set to 1 when a CRC error has been detected.

- AERR Flag
  This flag is set to 1 when an ACK error has been detected.

- FERR Flag
  This flag is set to 1 when a form error has been detected.

- SERR Flag
  This flag is set to 1 when a stuff error has been detected.

- ALF Flag
  This flag is set to 1 when an arbitration lost has been detected.

- BLF Flag
  This flag is set to 1 when 32 consecutive dominant bits have been detected on the CAN bus in channel communication mode. After that, detection of the bus lock becomes possible again if either of the following conditions is met.
  - A recessive bit is detected after the BLF bit has been modified from 1 to 0.
  - The CAN module transitions to channel reset mode and returns to channel communication mode after the BLF bit has been modified from 1 to 0.

- OVLF Flag
  This flag is set to 1 when the overload frame transmit condition has been detected when performing reception or transmission.

- BORF Flag
  This flag is set to 1 when 11 consecutive recessive bits have been detected 128 times and the CAN module returns from the bus off state. However, this flag is not set to 1 if the CAN module returns from the bus off state in either of the following ways before 11 consecutive recessive bits are detected 128 times.
  - The CHMDC[1:0] bits in the CiCTRL register are set to B'01 (channel reset mode).
  - The RTBO bit in the CiCTRL register is set to 1 (forcible return from the bus off state is made).
  - The BOM[1:0] bits in the CiCTRH register are set to B'01 (transition to channel halt mode at bus off entry).
  - The CHMDC[1:0] bits in the CiCTRL register are set to B'10 (channel halt mode) before 11 consecutive recessive bits are detected 128 times with the BOM[1:0] bits set to B'11 (transition to channel halt mode upon a request from the program during bus off).

- BOEF Flag
  This flag is set to 1 when the state becomes bus off state (TEC[7:0] value > 255). This flag is also set to 1 when the state becomes bus off state with the BOM[1:0] bits in the CiCTRH register set to B'01 (transition to channel halt mode at bus off entry).

- EPF Flag
  This flag becomes 1 when the CAN module becomes error passive state (REC[7:0] or TEC[7:0] value > 127). This flag becomes 1 only when the REC[7:0] or TEC[7:0] value exceeds 127 for the first time. Therefore, if the program writes 0 to this flag with the REC[7:0] or TEC[7:0] value remaining over 127, this bit is not set to 1 until both REC [7:0] and TEC[7:0] values become 127 or less and then the REC[7:0] or TEC[7:0] value exceeds 127 again.

- EWF Flag
  This flag is set to 1 only when the REC[7:0] or TEC[7:0] value exceeds 95 for the first time. Therefore, if the program writes 0 to this flag with the REC[7:0] or TEC[7:0] value remaining over 95, this bit is not set to 1 until both REC [7:0] and TEC[7:0] values become 95 or less and then the REC[7:0] or TEC[7:0] value exceeds 95 again.

- BEF Flag
  This flag is set to 1 when any one of the ADERR, B0ERR, B1ERR, CERR, AERR, FERR, and SERR flags in the CiERFLL register is set to 1.

18.3.8 CANi Error Flag Register H (CiERFLH) (i = 0)

Address C0ERFLHL: F030EH, C0ERFLHH: F030FH

	b15	b14	b13	b12	b11	b10	b9	b8	b7	b6	b5	b4	b3	b2	b1	b0
	—	CRCREG[14:0]														
After Reset	0	0	0	0	0	0	0	0	0	0	0	0	0	0	0	0

Bit	Symbol	Bit Name	Description	R/W
15	—	Reserved	This bit is always read as 0. The write value should always be 0.	R
14 to 0	CRCREG [14:0]	CRC Calculation Data	A CRC value calculated based on the transmit message or receive message is indicated.	R

- CRCREG[14:0] Bits
  When the CTME bit in the CiCTRH register is set to 1 (communication test mode is enabled), the CRC value calculated based on the transmit or receive message can be read. When the CTME bit is set to 0 (communication test mode is disabled), these bits are always read as 0.

18.3.9 CAN Global Configuration Register L (GCFGL)

Address GCFGLL: F0322H, GCFGLH: F0323H

	b15	b14	b13	b12	b11	b10	b9	b8	b7	b6	b5	b4	b3	b2	b1	b0
	—	—	—	TSSS	TSP[3:0]				—	—	—	DCS	MME	DRE	DCE	TPRI
After Reset	0	0	0	0	0	0	0	0	0	0	0	0	0	0	0	0

Bit	Symbol	Bit Name	Description	R/W
15 to 13	—	Reserved	These bits are always read as 0. The write value should always be 0.	R
12	TSSS	Timestamp Clock Source Select	0: Clock obtained by frequency-dividing f_{CLK} by 2 ($f_{CLK}/2$) 1: CANi bit time clock	R/W
11 to 8	TSP[3:0]	Timestamp Clock Source Division	b11 b10 b9 b8 0 0 0 0 : Not divided 0 0 0 1 : Divided by 2 0 0 1 0 : Divided by 4 0 0 1 1 : Divided by 8 0 1 0 0 : Divided by 16 0 1 0 1 : Divided by 32 0 1 1 0 : Divided by 64 0 1 1 1 : Divided by 128 1 0 0 0 : Divided by 256 1 0 0 1 : Divided by 512 1 0 1 0 : Divided by 1024 1 0 1 1 : Divided by 2048 1 1 0 0 : Divided by 4096 1 1 0 1 : Divided by 8192 1 1 1 0 : Divided by 16384 1 1 1 1 : Divided by 32768	R/W
7 to 5	—	Reserved	These bits are always read as 0. The write value should always be 0.	R
4	DCS	CAN Clock Source Select	0: Clock obtained by frequency-dividing f_{CLK} by 2 ($f_{CLK}/2$) 1: X1 clock (fx)	R/W
3	MME	Mirror Function Enable	0: Mirror function is disabled. 1: Mirror function is enabled.	R/W
2	DRE	DLC Replacement Enable	0: DLC replacement is disabled. 1: DLC replacement is enabled.	R/W
1	DCE	DLC Check Enable	0: DLC check is disabled. 1: DLC check is enabled.	R/W
0	TPRI	Transmit Priority Select	0: ID priority 1: Transmit buffer number priority	R/W

Modify the GCFGL register only in global reset mode.

- TSSS Bit
  This bit is used to select a clock source of the timestamp counter.

- TSP[3:0] Bits
  The clock obtained by dividing the clock source (selected by the TSSS bit) by the TSP[3:0] value is the count source of the timestamp counter.

- DCS Bit
  When this bit is set to 0, the clock obtained by frequency-dividing f_{CLK} by 2 ($f_{CLK}/2$) is used as the clock source of the CAN clock (f_{CAN}).
  When this bit is set to 1, the X1 clock (fx) is used as the clock source of the CAN clock. If the X1 clock (fx) is selected, make the X1 clock (fx) into the value below half[Note1, 2] of f_{CLK}.

  Notes 1. When the f_{CLK} clock source is high-speed on-chip oscillator or PLL clock sourced high-speed on-chip oscillator, the frequency must be set as "$f_X < f_{CLK}/2$".
  2. If the high-speed system clock is to be selected as f_{CLK}, do not select f_X as f_{CAN}.

- MME Bit
  Setting this bit to 1 makes the mirror function available.

- DRE Bit
  When the DRE bit is set to 1, the DLC value of the receive rule is stored in the buffer instead of the DLC value of the received message after the DLC value has passed through the DLC filter. In this case, a value of H'00 is stored in the data byte that exceeds the DLC value of the receive rule.
  When the DCE bit is set to 1 (DLC check is enabled), the DLC replacement function is available.

- DCE Bit
  Setting this bit to 1 makes the DLC check function available. Set the GAFLDLC[3:0] bits in the GAFLPHj register to B'0000 before clearing the DCE bit in the GCFGL register to 0.

- TPRI Bit
  This bit is used to set the transmit priority.
  When this bit is set to 0, ID priority is selected and the transmit priority complies with the CAN bus arbitration rule (ISO11898-1 specifications). When this bit is set to 1, transmit buffer number priority is selected and the minimum number of transmit buffer specified for transmission takes precedence.

18.3.10 CAN Global Configuration Register H (GCFGH)

Address GCFGHL: F0324H, GCFGHH: F0325H

	b15	b14	b13	b12	b11	b10	b9	b8	b7	b6	b5	b4	b3	b2	b1	b0
	ITRCP[15:0]															
After Reset	0	0	0	0	0	0	0	0	0	0	0	0	0	0	0	0

Bit	Symbol	Bit Name	Description	R/W
15-0	ITRCP[15:0]	Interval Timer Prescaler Set	If the set value is M, $f_{CLK}/2$ is frequency-divided by M. Setting H'0000 is prohibited, when the interval timer is in use.	R/W

Modify the GCFGH register only in global reset mode.

- ITRCP[15:0] Bits
  These bits are used to set a clock source division value of the interval timer for FIFO buffers. For details, see **18.6.3 (1) Interval Transmission Function**.

18.3.11 CAN Global Control Register L (GCTRL)

Address GCTRLL: F0326H, GCTRLH: F0327H

	b15	b14	b13	b12	b11	b10	b9	b8	b7	b6	b5	b4	b3	b2	b1	b0
	—	—	—	—	—	THLEIE	MEIE	DEIE	—	—	—	—	—	GSLPR	GMDC[1:0]	
After Reset	0	0	0	0	0	0	0	0	0	0	0	0	0	1	0	1

Bit	Symbol	Bit Name	Description	R/W
15 to 11	—	Reserved	These bits are always read as 0. The write value should always be 0.	R
10	THLEIE	Transmit History Buffer Overflow Interrupt Enable	0: Transmit history buffer overflow interrupt is disabled. 1: Transmit history buffer overflow interrupt is enabled.	R/W
9	MEIE	FIFO Message Lost Interrupt Enable	0: FIFO message lost interrupt is disabled. 1: FIFO message lost interrupt is enabled.	R/W
8	DEIE	DLC Error Interrupt Enable	0: DLC error interrupt is disabled. 1: DLC error interrupt is enabled.	R/W
7 to 3	—	Reserved	These bits are always read as 0. The write value should always be 0.	R
2	GSLPR	Global Stop Mode	0: Other than global stop mode 1: Global stop mode	R/W
1, 0	GMDC[1:0]	Global Mode Select	b1 b0 0 0 : Global operating mode 0 1 : Global reset mode 1 0 : Global test mode 1 1 : Setting prohibited	R/W

- THLEIE Bit
  When the THLEIE bit is set to 1 and the THLES flag in the GERFLL register is set to 1, an interrupt request is generated. Modify this bit only in global reset mode.

- MEIE Bit
  When the MEIE bit is set to 1 and the MES flag in the GERFLL register is set to 1, an interrupt request is generated. Modify this bit only in global reset mode.

- DEIE Bit
  When the DEIE bit is set to 1 and the DEF flag in the GERFLL register is set to 1, an interrupt request is generated. Modify this bit only in global reset mode.

- GSLPR Bit
  Setting this bit to 1 places the CAN module in global stop mode.
  Clearing this bit to 0 makes the CAN module leave from global stop mode.
  Do not modify this bit while the CAN channel is in global operating mode or global test mode.

- GMDC[1:0] Bits
  These bits are used to select the mode of entire CAN module (global operating mode, global reset mode, or global test mode). For details, see **18.4.1 Global Modes**. Setting the GSLPR bit to 1 in global reset mode places the CAN module in global stop mode.

18.3.12 CAN Global Control Register H (GCTRH)

Address GCTRHL: F0328H, GCTRHH: F0329H

	b15	b14	b13	b12	b11	b10	b9	b8	b7	b6	b5	b4	b3	b2	b1	b0
	—	—	—	—	—	—	—	—	—	—	—	—	—	—	—	TSRST
After Reset	0	0	0	0	0	0	0	0	0	0	0	0	0	0	0	0

Bit	Symbol	Bit Name	Description	R/W
15 to 1	—	Reserved	These bits are always read as 0. The write value should always be 0.	R
0	TSRST	Timestamp Counter Reset	Setting the TSRST bit to 1 resets the timestamp counter. This bit is always read as 0.	R/W

- TSRST Bit
  This bit is used to reset the timestamp counter. When this bit is set to 1, the GTSC register is cleared to H'0000.

18.3.13 CAN Global Status Register (GSTS)

Address GSTSL: F032AH, GSTSH: F032BH

	b15	b14	b13	b12	b11	b10	b9	b8	b7	b6	b5	b4	b3	b2	b1	b0
	—	—	—	—	—	—	—	—	—	—	—	—	GRAM INIT	GSLP STS	GHLT STS	GRST STS
After Reset	0	0	0	0	0	0	0	0	0	0	0	0	1	1	0	1

Bit	Symbol	Bit Name	Description	R/W
15 to 4	—	Reserved	These bits are always read as 0.	R
3	GRAMINIT	CAN RAM Initialization Status Flag	0: CAN RAM initialization is completed. 1: CAN RAM initialization is ongoing.	R
2	GSLPSTS	Global Stop Status Flag	0: Not in global stop mode 1: In global stop mode	R
1	GHLTSTS	Global Test Status Flag	0: Not in global test mode 1: In global test mode	R
0	GRSTSTS	Global Reset Status Flag	0: Not in global reset mode 1: In global reset mode	R

- GRAMINIT Flag
  This flag indicates the initialization status of the CAN RAM.
  This flag is set to 1 after the CAN module is enabled, and is cleared to 0 when CAN RAM initialization is completed.

- GSLPSTS Flag
  This flag is set to 1 when the CAN module has transitioned to global stop mode, and is cleared to 0 when the CAN module has returned from global stop mode.

- GHLTSTS Flag
  This flag is set to 1 when the CAN module has transitioned to global test mode, and is cleared to 0 when the CAN module has exited global test mode.

- GRSTSTS Flag
  This flag is set to 1 when the CAN module has transitioned to global reset mode, and is cleared to 0 when the CAN module has exited global reset mode. This flag remains 1 even when the CAN module has transitioned from global reset mode to global stop mode.

18.3.14 CAN Global Error Flag Register (GERFLL)

Address GERFLL: F032CH

	b7	b6	b5	b4	b3	b2	b1	b0
	—	—	—	—	—	THLES	MES	DEF
After Reset	0	0	0	0	0	0	0	0

Bit	Symbol	Bit Name	Description	R/W
7 to 3	—	Reserved	The read value is undefined. The write value should always be 0.	R
2	THLES	Transmit History Buffer Overflow Status Flag	0: No transmit history buffer overflow is present. 1: A transmit history buffer overflow is present.	R
1	MES	FIFO Message Lost Status Flag	0: No FIFO message lost error is present. 1: A FIFO message lost error is present.	R
0	DEF	DLC Error Flag	0: No DLC error is present. 1: A DLC error is present.	R/(W) Note

Note The only effective value for writing to this flag bit is 0, which clears the bit. Otherwise writing to the bit results in retention of its state. To write 0 to this flag bit, write by using an 8-bit data transfer instruction.

All flags in the GERFLL register are cleared to 0 in global reset mode.

- THLES Flag
  The THLES flag is set to 1 when the THLELT flag in the THLSTSi register is set to 1.
  This flag is cleared to 0 when the THLELT flag is set to 0.

- MES Flag
  The MES flag is set to 1 when any one of the RFMLT flags in the RFSTSm register (m = 0, 1) or the CFMLT flag in the CFSTSk register is set to 1.
  This flag is cleared to 0 when all RFMLT flags and the CFMLT flag are set to 0.

- DEF Flag
  The DEF flag is set to 1 when an error has been detected during the DLC check. This flag can be cleared to 0 by writing 0 by the program.

18.3.15 CAN Global Transmit Interrupt Status Register (GTINTSTS)

Address GTINTSTSL: F0388H, GTINTSTSH: F0389H

	b15	b14	b13	b12	b11	b10	b9	b8	b7	b6	b5	b4	b3	b2	b1	b0
	—	—	—	—	—	—	—	—	—	—	—	—	THIF0	CFTIF0	TAIF0	TSIF0
After Reset	0	0	0	0	0	0	0	0	0	0	0	0	0	0	0	0

Bit	Symbol	Bit Name	Description	R/W
15 to 4	—	Reserved	The read value is undefined. The write value should always be 0.	R
3	THIF0	CANi Transmit History Interrupt Status Flag	0: No transmit history interrupt request is present. 1: A transmit history interrupt request is present.	R
2	CFTIF0	CANi Transmit/Receive FIFO Interrupt Status Flag	0: No transmit/receive FIFO transmit interrupt request is present. 1: A transmit/receive FIFO transmit interrupt request is present.	R
1	TAIF0	CANi Transmit Buffer Abort Interrupt Status Flag	0: No transmit buffer abort interrupt request is present. 1: A transmit buffer abort interrupt request is present.	R
0	TSIF0	CANi Transmit Buffer Interrupt Status Flag	0: No transmit buffer transmit complete interrupt request is present. 1: A transmit buffer transmit complete interrupt request is present.	R

All flags in the GTINTSTS register are cleared to 0 in global reset or channel reset mode.

- THIF0 Flag
  The THIF0 flag is set to 1 when the THLIE bit in the THLCCi register is set to 1 (enabling interrupts) and the THLIF flag in the THLSTSi register is set to 1 (interrupt request present).
  This flag is cleared to 0 when the THLIF flag is set to 0. This flag is also cleared to 0 when the THLIE bit is set to 0.

- CFTIF0 Flag
  The CFTIF0 flag is set to 1 when the CFTXIE bit in the CFCCLk register is set to 1 (enabling interrupts) and the CFTXIF flag in the CFSTSk register is set to 1 (interrupt request present).
  This flag is cleared to 0 when the CFTXIF flag is set to 0. This flag is also cleared to 0 when the CFTXIE bit is set to 0.

- TAIF0 Flag
  The TAIF0 flag is set to 1 when the TAIE bit in the CiCTRH register is set to 1 (enabling interrupts) and the TMTRF[1:0] flag in the TMSTSp register is set to B'01 (transmit abort has been completed).
  This flag is cleared to 0 when the TMTRF[1:0] flag, which indicates that the abortion of transmission has been completed, is set to B'00.

- TSIF0 Flag
  The TSIF0 flag is set to 1 when the TMIEp bit in the TMIEC register is set to 1 (enabling interrupts) and the TMTRF[1:0] flag in the corresponding TMSTSp register is set to B’10 (transmission has been completed (without transmit abort request)) or B’11 (transmission has been completed (with transmit abort request)).
  This flag is cleared to 0 when all TMTRF[1:0] flags that satisfy a condition for setting the TSIF0 flag to 1 are set to B’00. This flag is also cleared to 0 when the TMIEp bit is set to 0.

18.3.16 CAN Timestamp Register (GTSC)

Address GTSC: F032EH

	b15	b14	b13	b12	b11	b10	b9	b8	b7	b6	b5	b4	b3	b2	b1	b0
	TS[15:0]															
After Reset	0	0	0	0	0	0	0	0	0	0	0	0	0	0	0	0

Bit	Symbol	Description	Counter Value	R/W
15 to 0	TS[15:0]	The timestamp counter value can be read.	H'0000 to H'FFFF	R

- TS[15:0] Bits
  When the TS[15:0] bits are read, the read value shows the timestamp counter (16-bit free-running counter) value at that time. The TS[15:0] value is captured when the SOF is detected and then stored in the receive buffer or the FIFO buffer. The timestamp counter is initialized in global reset mode.
  The timestamp counter start timing and stop timing depend on the count source.
  - When the TSSS value in the GCFGL register is 0 (the clock obtained by frequency-dividing f_{CLK} by 2 ($f_{CLK}/2$) is selected):
    The timestamp counter starts counting when the CAN module has transitioned to global operating mode.
    This counter stops counting when the CAN module has transitioned to global stop mode or global test mode.
  - When the TSSS value in the GCFGL register is 1 (CANi bit time clock is selected):
    The timestamp counter starts counting when the corresponding channel has transitioned to channel communication mode.
    This counter stops counting when the corresponding channel has transitioned to channel reset mode or channel halt mode.

18.3.17 CAN Receive Rule Number Configuration Register (GAFLCFG)

Address GAFLCFGL: F0330H, GAFLCFGH: F0331H

	b15	b14	b13	b12	b11	b10	b9	b8	b7	b6	b5	b4	b3	b2	b1	b0
	—	—	—	—	—	—	—	—	—	—	—	RNC0[4:0]				
After Reset	0	0	0	0	0	0	0	0	0	0	0	0	0	0	0	0

Bit	Symbol	Bit Name	Description	R/W
15 to 5	—	Reserved	These bits are always read as 0.	R
4 to 0	RNC0[4:0]	CANi Receive Rule Number Set	Set the number of receive rules of channel 0. Set these bits to a value within a range of H'00 to H'10.	R/W

Modify the GAFLCFG register only in global reset mode.
Up to 16 rules can be registered in the receive rule table.

- RNC0[4:0] Bits
  These bits are used to set the number of rules to be registered in the channel 0 receive rule table.
  Set these bits to a value within a range of H'00 to H'10.

18.3.18 CAN Receive Rule Entry Register jAL (GAFLIDLj) (j = 0 to 15)

Address	GAFLIDL0L: F03A0H, GAFLIDL0H: F03A1H	GAFLIDL1L: F03ACH, GAFLIDL1H: F03ADH
	GAFLIDL2L: F03B8H, GAFLIDL2H: F03B9H	GAFLIDL3L: F03C4H, GAFLIDL3H: F03C5H
	GAFLIDL4L: F03D0H, GAFLIDL4H: F03D1H	GAFLIDL5L: F03DCH, GAFLIDL5H: F03DDH
	GAFLIDL6L: F03E8H, GAFLIDL6H: F03E9H	GAFLIDL7L: F03F4H, GAFLIDL7H: F03F5H
	GAFLIDL8L: F0400H, GAFLIDL8H: F0401H	GAFLIDL9L: F040CH, GAFLIDL9H: F040DH
	GAFLIDL10L: F0418H, GAFLIDL10H: F0419H	GAFLIDL11L: F0424H, GAFLIDL11H: F0425H
	GAFLIDL12L: F0430H, GAFLIDL12H: F0431H	GAFLIDL13L: F043CH, GAFLIDL13H: F043DH
	GAFLIDL14L: F0448H, GAFLIDL14H: F0449H	GAFLIDL15L: F0454H, GAFLIDL15H: F0455H

	b15	b14	b13	b12	b11	b10	b9	b8	b7	b6	b5	b4	b3	b2	b1	b0
	GAFLID[15:0]															
After Reset	0	0	0	0	0	0	0	0	0	0	0	0	0	0	0	0

Bit	Symbol	Bit Name	Description	R/W
15 to 0	GAFLID[15:0]	ID Set L	Set the ID of the receive rule. For the standard ID, set the ID in bits 10 to 0 and set bits 15 to 11 to 0.	R/W

Modify the GAFLIDLj register only when the RPAGE bit in the GRWCR register is set to 0 in global reset mode.

- GAFLID[15:0] Bits
  These bits are used to set the ID field of the receive rule. The ID value set by these bits is compared with the ID in the received message during the acceptance filter processing.

18.3.19 CAN Receive Rule Entry Register jAH (GAFLIDHj) (j = 0 to 15)

Address GAFLIDH0L: F03A2H, GAFLIDH0H: F03A3H GAFLIDH1L: F03AEH, GAFLIDH1H: F03AFH
GAFLIDH2L: F03BAH, GAFLIDH2H: F03BBH GAFLIDH3L: F03C6H, GAFLIDH3H: F03C7H
GAFLIDH4L: F03D2H, GAFLIDH4H: F03D3H GAFLIDH5L: F03DEH, GAFLIDH5H: F03DFH
GAFLIDH6L: F03EAH, GAFLIDH6H: F03EBH GAFLIDH7L: F03F6H, GAFLIDH7H: F03F7H
GAFLIDH8L: F0402H, GAFLIDH8H: F0403H GAFLIDH9L: F040EH, GAFLIDH9H: F040FH
GAFLIDH10L: F041AH, GAFLIDH10H: F041BH GAFLIDH11L: F0426H, GAFLIDH11H: F0427H
GAFLIDH12L: F0432H, GAFLIDH12H: F0433H GAFLIDH13L: F043EH, GAFLIDH13H: F043FH
GAFLIDH14L: F044AH, GAFLIDH14H: F044BH GAFLIDH15L: F0456H, GAFLIDH15H: F0457H

	b15	b14	b13	b12	b11	b10	b9	b8	b7	b6	b5	b4	b3	b2	b1	b0
	GAFL IDE	GAFL RTR	GAFL LB	GAFLID[28:16]												
After Reset	0	0	0	0	0	0	0	0	0	0	0	0	0	0	0	0

Bit	Symbol	Bit Name	Description	R/W
15	GAFLIDE	IDE Select	0: Standard ID 1: Extended ID	R/W
14	GAFLRTR	RTR Select	0: Data frame 1: Remote frame	R/W
13	GAFLLB	Receive Rule Target Message Select	0: When a message transmitted from another CAN node is received 1: When a message transmitted from own node is received	R/W
12 to 0	GAFLID[28:16]	ID Set H	Set the ID of the receive rule. For the standard ID, set these bits to 0.	R/W

Modify the GAFLIDHj register only when the RPAGE bit in the GRWCR register is set to 0 in global reset mode.

- GAFLIDE Bit
  This bit is used to select the ID format (standard ID or extended ID) of the receive rule. This bit is compared with the IDE bit in the received message during the acceptance filter processing.

- GAFLRTR Bit
  This bit is used to select the frame format (data frame or remote frame) of the receive rule. This bit is compared with the RTR bit in the received message during the acceptance filter processing.

- GAFLLB Bit
  When this bit is set to 0, data processing using the receive rule is performed when receiving messages transmitted from another CAN node.
  When this bit is set to 1 when the mirror function is used, data processing using the receive rule is performed when receiving messages transmitted from the own CAN node.

- GAFLID[28:16] Bits
  These bits are used to set the ID field of the receive rule. The ID value set by these bits is compared with the ID in the received message during the acceptance filter processing.

18.3.20 CAN Receive Rule Entry Register jBL (GAFLMLj) (j = 0 to 15)

Address GAFLML0L: F03A4H, GAFLML0H: F03A5H GAFLML1L: F03B0H, GAFLML1H: F03B1H
GAFLML2L: F03BCH, GAFLML2H: F03BDH GAFLML3L: F03C8H, GAFLML3H: F03C9H
GAFLML4L: F03D4H, GAFLML4H: F03D5H GAFLML5L: F03E0H, GAFLML5H: F03E1H
GAFLML6L: F03ECH, GAFLML6H: F03EDH GAFLML7L: F03F8H, GAFLML7H: F03F9H
GAFLML8L: F0404H, GAFLML8H: F0405H GAFLML9L: F0410H, GAFLML9H: F0411H
GAFLML10L: F041CH, GAFLML10H: F041DH GAFLML11L: F0428H, GAFLML11H: F0429H
GAFLML12L: F0434H, GAFLML12H: F0435H GAFLML13L: F0440H, GAFLML13H: F0441H
GAFLML14L: F044CH, GAFLML14H: F044DH GAFLML15L: F0458H, GAFLML15H: F0459H

	b15	b14	b13	b12	b11	b10	b9	b8	b7	b6	b5	b4	b3	b2	b1	b0
	GAFLIDM[15:0]															
After Reset	0	0	0	0	0	0	0	0	0	0	0	0	0	0	0	0

Bit	Symbol	Bit Name	Description	R/W
15 to 0	GAFLIDM [15:0]	ID Mask L	0: The corresponding ID bit is not compared. 1: The corresponding ID bit is compared.	R/W

Modify the GAFLMLj register only when the RPAGE bit in the GRWCR register is set to 0 in global reset mode.

- GAFLIDM[15:0] Bits
  These bits are used to mask the corresponding ID bit of the receive rule.

18.3.21 CAN Receive Rule Entry Register jBH (GAFLMHj) (j = 0 to 15)

Address GAFLMH0L: F03A6H, GAFLMH0H: F03A7H GAFLMH1L: F03B2H, GAFLMH1H: F03B3H
GAFLMH2L: F03BEH, GAFLMH2H: F03BFH GAFLMH3L: F03CAH, GAFLMH3H: F03CBH
GAFLMH4L: F03D6H, GAFLMH4H: F03D7H GAFLMH5L: F03E2H, GAFLMH5H: F03E3H
GAFLMH6L: F03EEH, GAFLMH6H: F03EFH GAFLMH7L: F03FAH, GAFLMH7H: F03FBH
GAFLMH8L: F0406H, GAFLMH8H: F0407H GAFLMH9L: F0412H, GAFLMH9H: F0413H
GAFLMH10L: F041EH, GAFLMH10H: F041FH GAFLMH11L: F042AH, GAFLMH11H: F042BH
GAFLMH12L: F0436H, GAFLMH12H: F0437H GAFLMH13L: F0442H, GAFLMH13H: F0443H
GAFLMH14L: F044EH, GAFLMH14H: F044FH GAFLMH15L: F045AH, GAFLMH15H: F045BH

	b15	b14	b13	b12	b11	b10	b9	b8	b7	b6	b5	b4	b3	b2	b1	b0
	GAFL IDEM	GAFL RTRM	—	GAFLIDM[28:16]												
After Reset	0	0	0	0	0	0	0	0	0	0	0	0	0	0	0	0

Bit	Symbol	Bit Name	Description	R/W
15	GAFLIDEM	IDE Mask	0: The IDE bit is not compared. 1: The IDE bit is compared.	R/W
14	GAFLRTRM	RTR Mask	0: The RTR bit is not compared. 1: The RTR bit is compared	R/W
13	—	Reserved	This bit is always read as 0. The write value should always be 0.	R
12 to 0	GAFLIDM [28:16]	ID Mask H	0: The corresponding ID bit is not compared. 1: The corresponding ID bit is compared.	R/W

Modify the GAFLMHj register only when the RPAGE bit in the GRWCR register is set to 0 in global reset mode.

- GAFLIDEM Bit
  When this bit is set to 1, filter processing is performed only for messages of the ID format specified by the GAFLIDE bit in the GAFLIDHj register.
  When this bit is set to 0, it is regarded that all received messages have matched the specified ID format. To set the GAFLIDEM bit to 0, set the GAFLIDM[28:16] bits in the GAFLMHj register and the GAFLIDM[15:0] bits in the GAFLMLj register to all 0 at the same time.

- GAFLRTRM Bit
  This bit is used to mask the RTR bit of the receive rule.

- GAFLIDM[28:16] Bits
  These bits are used to mask the corresponding ID bit of the receive rule.

18.3.22 CAN Receive Rule Entry Register jCL (GAFLPLj) (j = 0 to 15)

Address GAFLPL0L: F03A8H, GAFLPL0H: F03A9H GAFLPL1L: F03B4H, GAFLPL1H: F03B5H
GAFLPL2L: F03C0H, GAFLPL2H: F03C1H GAFLPL3L: F03CCH, GAFLPL3H: F03CDH
GAFLPL4L: F03D8H, GAFLPL4H: F03D9H GAFLPL5L: F03E4H, GAFLPL5H: F03E5H
GAFLPL6L: F03F0H, GAFLPL6H: F03F1H GAFLPL7L: F03FCH, GAFLPL7H: F03FDH
GAFLPL8L: F0408H, GAFLPL8H: F0409H GAFLPL9L: F0414H, GAFLPL9H: F0415H
GAFLPL10L: F0420H, GAFLPL10H: F0421H GAFLPL11L: F042CH, GAFLPL11H: F042DH
GAFLPL12L: F0438H, GAFLPL12H: F0439H GAFLPL13L: F0444H, GAFLPL13H: F0445H
GAFLPL14L: F0450H, GAFLPL14H: F0451H GAFLPL15L: F045CH, GAFLPL15H: F045DH

	b15	b14	b13	b12	b11	b10	b9	b8	b7	b6	b5	b4	b3	b2	b1	b0
	GAFLRMV	GAFLRMDP[6:0]							—	—	—	GAFLFDP4	—	—	GAFLFDP1	GAFLFDP0
After Reset	0	0	0	0	0	0	0	0	0	0	0	0	0	0	0	0

Bit	Symbol	Bit Name	Description	R/W
15	GAFLRMV	Receive Buffer Enable	0: No receive buffer is used. 1: A receive buffer is used.	R/W
14 to 8	GAFLRMDP [6:0]	Receive Buffer Number Select	Set the receive buffer number to store receive messages.	R/W
7 to 5	—	Reserved	These bits are always read as 0. The write value should always be 0.	R
4	GAFLFDP4	CAN0 Transmit/Receive FIFO Buffer Select 0	0: Not select a CAN0 transmit/receive FIFO buffer 0 1: Select a CAN0 transmit/receive FIFO buffer 0	R/W
3, 2	—	Reserved	These bits are always read as 0. The write value should always be 0.	R
1	GAFLFDP1	Receive FIFO Buffer Select 1	0: Not select a receive FIFO buffer 1 1: Select a receive FIFO buffer 1	R/W
0	GAFLFDP0	Receive FIFO Buffer Select 0	0: Not select a receive FIFO buffer 0 1: Select a receive FIFO buffer 0	R/W

Modify the GAFLPLj register only when the RPAGE bit in the GRWCR register is set to 0 in global reset mode.

- GAFLRMV Bit
  When this bit is set to 1, receive messages that have passed through the filter are stored in the receive buffer selected by the GAFLRMDP[6:0] bits.

- GAFLRMDP[6:0] Bits
  These bits are used to select the number of the receive buffer that stores receive messages that have passed through the filter when the GAFLRMV bit is set to 1. Set these bits to a value smaller than the value set by the NRXMB[4:0] bits in the RMNB register.

- GAFLFDP4, GAFLFDP1, and GAFLFDP0 Bits
  These bits are used to specify FIFO buffers that store receive messages that have passed through the filter. Up to two FIFO buffers are selectable. However, when the GAFLRMV bit in the GAFLPLj register is set to 1 (a receive buffer is used), up to one FIFO buffer is selectable. Only receive FIFO buffers and the transmit/receive FIFO buffer for which the CFM[1:0] bits in the CFCCHk register are set to B'00 (receive mode) are selectable.

18.3.23 CAN Receive Rule Entry Register jCH (GAFLPHj) (j = 0 to 15)

Address GAFLPH0L: F03AAH, GAFLPH0H: F03ABH GAFLPH1L: F03B6H, GAFLPH1H: F03B7H
GAFLPH2L: F03C2H, GAFLPH2H: F03C3H GAFLPH3L: F03CEH, GAFLPH3H: F03CFH
GAFLPH4L: F03DAH, GAFLPH4H: F03DBH GAFLPH5L: F03E6H, GAFLPH5H: F03E7H
GAFLPH6L: F03F2H, GAFLPH6H: F03F3H GAFLPH7L: F03FEH, GAFLPH7H: F03FFH
GAFLPH8L: F040AH, GAFLPH8H: F040BH GAFLPH9L: F0416H, GAFLPH9H: F0417H
GAFLPH10L: F0422H, GAFLPH10H: F0423H GAFLPH11L: F042EH, GAFLPH11H: F042FH
GAFLPH12L: F043AH, GAFLPH12H: F043BH GAFLPH13L: F0446H, GAFLPH13H: F0447H
GAFLPH14L: F0452H, GAFLPH14H: F0453H GAFLPH15L: F045EH, GAFLPH15H: F045FH

	b15	b14	b13	b12	b11	b10	b9	b8	b7	b6	b5	b4	b3	b2	b1	b0
	GAFLDLC[3:0]				GAFLPTR[11:0]											
After Reset	0	0	0	0	0	0	0	0	0	0	0	0	0	0	0	0

Bit	Symbol	Bit Name	Description	R/W
15 to 12	GAFLDLC [3:0]	Receive Rule DLC	b15 b14 b13 b12 0 0 0 0 : DLC check is disabled. 0 0 0 1 : 1 data byte 0 0 1 0 : 2 data bytes 0 0 1 1 : 3 data bytes 0 1 0 0 : 4 data bytes 0 1 0 1 : 5 data bytes 0 1 1 0 : 6 data bytes 0 1 1 1 : 7 data bytes 1 X X X : 8 data bytes	R/W
11 to 0	GAFLPTR [11:0]	Receive Rule Label	Set the 12-bit label information.	R/W

Modify the GAFLPHj register only when the RPAGE bit in the GRWCR register is set to 0 in global reset mode.

- GAFLDLC[3:0] Bits
  These bits are used to set the minimum data length necessary for receiving messages. If the data length of a message that is being filtered is equal to or larger than the value set by the GAFLDLC[3:0] bits, the message passes the DLC check. Setting these bits to B'0000 disables the DLC check function allowing messages with any data length to pass the DLC check.

- GAFLPTR [11:0] Bits
  These bits are used to set a 12-bit label to be attached to messages that have passed through the filter. A label is attached when a message is stored in the receive buffer or the FIFO buffer.

18.3.24 CAN Receive Buffer Number Configuration Register (RMNB)

Address RMNBL: F0332H

	b15	b14	b13	b12	b11	b10	b9	b8	b7	b6	b5	b4	b3	b2	b1	b0
	—	—	—	—	—	—	—	—	—	—	—	NRXMB[4:0]				
After Reset	0	0	0	0	0	0	0	0	0	0	0	0	0	0	0	0

Bit	Symbol	Bit Name	Description	R/W
15 to 5	—	Reserved	These bits are always read as 0. The write value should always be 0.	R
4 to 0	NRXMB[4:0]	Receive Buffer Number Configuration	Set the number of receive buffers. Set a value of 0 to 16.	R/W

Modify the RMNB register only in global reset mode.

- NRXMB[4:0] Bits
  These bits are used to set the total number of receive buffers of the CAN module.
  The maximum value is 16.
  Setting these bits to all 0 makes receive buffers unavailable.

18.3.25 CAN Receive Buffer Receive Complete Flag Register (RMND0)

Address RMND0L: F0334H, RMND0H: F0335H

	b15	b14	b13	b12	b11	b10	b9	b8	b7	b6	b5	b4	b3	b2	b1	b0
	RMNS[15:0]															
After Reset	0	0	0	0	0	0	0	0	0	0	0	0	0	0	0	0

Bit	Symbol	Bit Name	Description	R/W
15 to 0	RMNS[15:0]	Receive Buffer Receive Complete Flag n	0: Receive buffer n contains no new message (n = 0 to 15). 1: Receive buffer n contains a new message.	R/W

Write 0 to the RMND0 register in global operating mode or global test mode.

- RMNS[15:0] Flags
  Each RMNS flag is set to 1 when the processing for storing a message in the corresponding receive buffer starts.
  To clear these flags to 0, write 0 to the corresponding flag by the program. In this case, write 0 to bits to be cleared and write 1 to other bits by using an 8-bit or 16-bit data transfer instruction. These bits cannot be set to 0 while a message is being stored. It takes time of ten clock cycles of f_{CLK} for storing a message.
  These flags are cleared to 0 in global reset mode.

18.3.26 CAN Receive Buffer Register nAL (RMIDLn) (n = 0 to 15)

Address RMIDL0L: F03A0H, RMIDL0H: F03A1H RMIDL1L: F03B0H, RMIDL1H: F03B1H
RMIDL2L: F03C0H, RMIDL2H: F03C1H RMIDL3L: F03D0H, RMIDL3H: F03D1H
RMIDL4L: F03E0H, RMIDL4H: F03E1H RMIDL5L: F03F0H, RMIDL5H: F03F1H
RMIDL6L: F0400H, RMIDL6H: F0401H RMIDL7L: F0410H, RMIDL7H: F0411H
RMIDL8L: F0420H, RMIDL8H: F0421H RMIDL9L: F0430H, RMIDL9H: F0431H
RMIDL10L: F0440H, RMIDL10H: F0441H RMIDL11L: F0450H, RMIDL11H: F0451H
RMIDL12L: F0460H, RMIDL12H: F0461H RMIDL13L: F0470H, RMIDL13H: F0471H
RMIDL14L: F0480H, RMIDL14H: F0481H RMIDL15L: F0490H, RMIDL15H: F0491H

	b15	b14	b13	b12	b11	b10	b9	b8	b7	b6	b5	b4	b3	b2	b1	b0
	RMID[15:0]															
After Reset	0	0	0	0	0	0	0	0	0	0	0	0	0	0	0	0

Bit	Symbol	Bit Name	Description	R/W
15 to 0	RMID[15:0]	Receive Buffer ID Data L	The standard ID or extended ID of received message can be read. Read bits 10 to 0 for standard ID. Bits 15 to 11 are read as 0.	R

This register can be read when the RPAGE bit in the GRWCR register is 1.

- RMID[15:0] Bits
  These bits indicate the ID of the message stored in the receive buffer.

18.3.27 CAN Receive Buffer Register nAH (RMIDHn) (n = 0 to 15)

Address RMIDH0L: F03A2H, RMIDH0H: F03A3H RMIDH1L: F03B2H, RMIDH1H: F03B3H
RMIDH2L: F03C2H, RMIDH2H: F03C3H RMIDH3L: F03D2H, RMIDH3H: F03D3H
RMIDH4L: F03E2H, RMIDH4H: F03E3H RMIDH5L: F03F2H, RMIDH5H: F03F3H
RMIDH6L: F0402H, RMIDH6H: F0403H RMIDH7L: F0412H, RMIDH7H: F0413H
RMIDH8L: F0422H, RMIDH8H: F0423H RMIDH9L: F0432H, RMIDH9H: F0433H
RMIDH10L: F0442H, RMIDH10H: F0443H RMIDH11L: F0452H, RMIDH11H: F0453H
RMIDH12L: F0462H, RMIDH12H: F0463H RMIDH13L: F0472H, RMIDH13H: F0473H
RMIDH14L: F0482H, RMIDH14H: F0483H RMIDH15L: F0492H, RMIDH15H: F0493H

	b15	b14	b13	b12	b11	b10	b9	b8	b7	b6	b5	b4	b3	b2	b1	b0
	RMIDE	RMRTR	—	RMID[28:16]												
After Reset	0	0	0	0	0	0	0	0	0	0	0	0	0	0	0	0

Bit	Symbol	Bit Name	Description	R/W
15	RMIDE	Receive Buffer IDE	0: Standard ID 1: Extended ID	R
14	RMRTR	Receive Buffer RTR	0: Data frame 1: Remote frame	R
13	—	Reserved	This bit is always read as 0.	R
12 to 0	RMID[28:16]	Receive Buffer ID Data H	The standard ID or extended ID of received message can be read. For standard ID, these bits are read as 0.	R

This register can be read when the RPAGE bit in the GRWCR register is 1.

- RMIDE Bit
  This bit indicates the ID format (standard ID or extended ID) of the message stored in the receive buffer.

- RMRTR Bit
  This bit indicates the frame format (data frame or remote frame) of the message stored in the receive buffer.

- RMID[28:16] Bits
  These bits indicate the ID of the message stored in the receive buffer.

18.3.28 CAN Receive Buffer Register nBL (RMTSn) (n = 0 to 15)

Address RMTS0L: F03A4H, RMTS0H: F03A5H RMTS1L: F03B4H, RMTS1H: F03B5H
RMTS2L: F03C4H, RMTS2H: F03C5H RMTS3L: F03D4H, RMTS3H: F03D5H
RMTS4L: F03E4H, RMTS4H: F03E5H RMTS5L: F03F4H, RMTS5H: F03F5H
RMTS6L: F0404H, RMTS6H: F0405H RMTS7L: F0414H, RMTS7H: F0415H
RMTS8L: F0424H, RMTS8H: F0425H RMTS9L: F0434H, RMTS9H: F0435H
RMTS10L: F0444H, RMTS10H: F0445H RMTS11L: F0454H, RMTS11H: F0455H
RMTS12L: F0464H, RMTS12H: F0465H RMTS13L: F0474H, RMTS13H: F0475H
RMTS14L: F0484H, RMTS14H: F0485H RMTS15L: F0494H, RMTS15H: F0495H

	b15	b14	b13	b12	b11	b10	b9	b8	b7	b6	b5	b4	b3	b2	b1	b0
	RMTS[15:0]															
After Reset	0	0	0	0	0	0	0	0	0	0	0	0	0	0	0	0

Bit	Symbol	Bit Name	Description	R/W
15 to 0	RMTS[15:0]	Receive Buffer Timestamp Data	Timestamp value of the received message can be read.	R

This register can be read when the RPAGE bit in the GRWCR register is 1.

- RMTS[15:0] Bits
  These bits indicate the timestamp value of the message stored in the receive buffer.

18.3.29 CAN Receive Buffer Register nBH (RMPTRn) (n = 0 to 15)

Address RMPTR0L: F03A6H, RMPTR0H: F03A7H RMPTR1L: F03B6H, RMPTR1H: F03B7H
RMPTR2L: F03C6H, RMPTR2H: F03C7H RMPTR3L: F03D6H, RMPTR3H: F03D7H
RMPTR4L: F03E6H, RMPTR4H: F03E7H RMPTR5L: F03F6H, RMPTR5H: F03F7H
RMPTR6L: F0406H, RMPTR6H: F0407H RMPTR7L: F0416H, RMPTR7H: F0417H
RMPTR8L: F0426H, RMPTR8H: F0427H RMPTR9L: F0436H, RMPTR9H: F0437H
RMPTR10L: F0446H, RMPTR10H: F0447H RMPTR11L: F0456H, RMPTR11H: F0457H
RMPTR12L: F0466H, RMPTR12H: F0467H RMPTR13L: F0476H, RMPTR13H: F0477H
RMPTR14L: F0486H, RMPTR14H: F0487H RMPTR15L: F0496H, RMPTR15H: F0497H

	b15	b14	b13	b12	b11	b10	b9	b8	b7	b6	b5	b4	b3	b2	b1	b0
	RMDLC[3:0]				RMPTR[11:0]											
After Reset	0	0	0	0	0	0	0	0	0	0	0	0	0	0	0	0

Bit	Symbol	Bit Name	Description	R/W
15 to 12	RMDLC[3:0]	Receive Buffer DLC Data	b15 b14 b13 b12 0 0 0 0 : 0 data bytes 0 0 0 1 : 1 data byte 0 0 1 0 : 2 data bytes 0 0 1 1 : 3 data bytes 0 1 0 0 : 4 data bytes 0 1 0 1 : 5 data bytes 0 1 1 0 : 6 data bytes 0 1 1 1 : 7 data bytes 1 X X X : 8 data bytes	R
11 to 0	RMPTR [11:0]	Receive Buffer Label Data	Label information of the received message can be read.	R

This register can be read when the RPAGE bit in the GRWCR register is 1.

- RMDLC[3:0] Bits
  These bits indicate the data length of the message stored in the receive buffer.

- RMPTR[11:0] Bits
  These bits indicate the label information of the message stored in the receive buffer.

18.3.30 CAN Receive Buffer Register nCL (RMDF0n) (n = 0 to 15)

Address RMDF00L: F03A8H, RMDF00H: F03A9H RMDF01L: F03B8H, RMDF01H: F03B9H
RMDF02L: F03C8H, RMDF02H: F03C9H RMDF03L: F03D8H, RMDF03H: F03D9H
RMDF04L: F03E8H, RMDF04H: F03E9H RMDF05L: F03F8H, RMDF05H: F03F9H
RMDF06L: F0408H, RMDF06H: F0409H RMDF07L: F0418H, RMDF07H: F0419H
RMDF08L: F0428H, RMDF08H: F0429H RMDF09L: F0438H, RMDF09H: F0439H
RMDF010L: F0448H, RMDF010H: F0449H RMDF011L: F0458H, RMDF011H: F0459H
RMDF012L: F0468H, RMDF012H: F0469H RMDF013L: F0478H, RMDF013H: F0479H
RMDF014L: F0488H, RMDF014H: F0489H RMDF015L: F0498H, RMDF015H: F0499H

	b15	b14	b13	b12	b11	b10	b9	b8	b7	b6	b5	b4	b3	b2	b1	b0
	RMDB1[7:0]								RMDB0[7:0]							
After Reset	0	0	0	0	0	0	0	0	0	0	0	0	0	0	0	0

Bit	Symbol	Bit Name	Description	R/W
15 to 8	RMDB1[7:0]	Receive Buffer Data Byte 1	Data in the message stored in the receive buffer can be read.	R
7 to 0	RMDB0[7:0]	Receive Buffer Data Byte 0		R

When the RMDLC[3:0] value in the RMPTRn register is smaller than B'1000, data bytes for which no data is set are read as H'00.

This register can be read when the RPAGE bit in the GRWCR register is 1.

18.3.31 CAN Receive Buffer Register nCH (RMDF1n) (n = 0 to 15)

Address RMDF10L: F03AAH, RMDF10H: F03ABH RMDF11L: F03BAH, RMDF11H: F03BBH
RMDF12L: F03CAH, RMDF12H: F03CBH RMDF13L: F03DAH, RMDF13H: F03DBH
RMDF14L: F03EAH, RMDF14H: F03EBH RMDF15L: F03FAH, RMDF15H: F03FBH
RMDF16L: F040AH, RMDF16H: F040BH RMDF17L: F041AH, RMDF17H: F041BH
RMDF18L: F042AH, RMDF18H: F042BH RMDF19L: F043AH, RMDF19H: F043BH
RMDF110L: F044AH, RMDF110H: F044BH RMDF111L: F045AH, RMDF111H: F045BH
RMDF112L: F046AH, RMDF112H: F046BH RMDF113L: F047AH, RMDF113H: F047BH
RMDF114L: F048AH, RMDF114H: F048BH RMDF115L: F049AH, RMDF115H: F049BH

	b15	b14	b13	b12	b11	b10	b9	b8	b7	b6	b5	b4	b3	b2	b1	b0
	RMDB3[7:0]								RMDB2[7:0]							
After Reset	0	0	0	0	0	0	0	0	0	0	0	0	0	0	0	0

Bit	Symbol	Bit Name	Description	R/W
15 to 8	RMDB3[7:0]	Receive Buffer Data Byte 3	Data in the message stored in the receive buffer can be read.	R
7 to 0	RMDB2[7:0]	Receive Buffer Data Byte 2		R

When the RMDLC[3:0] value in the RMTPRn register is smaller than B'1000, data bytes for which no data is set are read as H'00.

This register can be read when the RPAGE bit in the GRWCR register is 1.

18.3.32 CAN Receive Buffer Register nDL (RMDF2n) (n = 0 to 15)

Address RMDF20L: F03ACH, RMDF20H: F03ADH RMDF21L: F03BCH, RMDF21H: F03BDH
RMDF22L: F03CCH, RMDF22H: F03CDH RMDF23L: F03DCH, RMDF23H: F03DDH
RMDF24L: F03ECH, RMDF24H: F03EDH RMDF25L: F03FCH, RMDF25H: F03FDH
RMDF26L: F040CH, RMDF26H: F040DH RMDF27L: F041CH, RMDF27H: F041DH
RMDF28L: F042CH, RMDF28H: F042DH RMDF29L: F043CH, RMDF29H: F043DH
RMDF210L: F044CH, RMDF210H: F044DH RMDF211L: F045CH, RMDF211H: F045DH
RMDF212L: F046CH, RMDF212H: F046DH RMDF213L: F047CH, RMDF213H: F047DH
RMDF214L: F048CH, RMDF214H: F048DH RMDF215L: F049CH, RMDF215H: F049DH

	b15	b14	b13	b12	b11	b10	b9	b8	b7	b6	b5	b4	b3	b2	b1	b0
	RMDB5[7:0]								RMDB4[7:0]							
After Reset	0	0	0	0	0	0	0	0	0	0	0	0	0	0	0	0

Bit	Symbol	Bit Name	Description	R/W
15 to 8	RMDB5[7:0]	Receive Buffer Data Byte 5	Data in the message stored in the receive buffer can be read.	R
7 to 0	RMDB4[7:0]	Receive Buffer Data Byte 4		R

When the RMDLC[3:0] value in the RMPTRn register is smaller than B'1000, data bytes for which no data is set are read as H'00.

This register can be read when the RPAGE bit in the GRWCR register is 1.

18.3.33 CAN Receive Buffer Register nDH (RMDF3n) (n = 0 to 15)

Address RMDF30L: F03AEH, RMDF30H: F03AFH RMDF31L: F03BEH, RMDF31H: F03BFH
RMDF32L: F03CEH, RMDF32H: F03CFH RMDF33L: F03DEH, RMDF33H: F03DFH
RMDF34L: F03EEH, RMDF34H: F03EFH RMDF35L: F03FEH, RMDF35H: F03FFH
RMDF36L: F040EH, RMDF36H: F040FH RMDF37L: F041EH, RMDF37H: F041FH
RMDF38L: F042EH, RMDF38H: F042FH RMDF39L: F043EH, RMDF39H: F043FH
RMDF310L: F044EH, RMDF310H: F044FH RMDF311L: F045EH, RMDF311H: F045FH
RMDF312L: F046EH, RMDF312H: F046FH RMDF313L: F047EH, RMDF313H: F047FH
RMDF314L: F048EH, RMDF314H: F048FH RMDF315L: F049EH, RMDF315H: F049FH

	b15	b14	b13	b12	b11	b10	b9	b8	b7	b6	b5	b4	b3	b2	b1	b0
	RMDB7[7:0]								RMDB6[7:0]							
After Reset	0	0	0	0	0	0	0	0	0	0	0	0	0	0	0	0

Bit	Symbol	Bit Name	Description	R/W
15 to 8	RMDB7[7:0]	Receive Buffer Data Byte 7	Data in the message stored in the receive buffer can be read.	R
7 to 0	RMDB6[7:0]	Receive Buffer Data Byte 6		R

When the RMDLC[3:0] value in the RMPTRn register is smaller than B'1000, data bytes for which no data is set are read as H'00.

This register can be read when the RPAGE bit in the GRWCR register is 1.

18.3.34 CAN Receive FIFO Control Register m (RFCCm) (m = 0, 1)

Address RFCC0L: F0338H, RFCC0H: F0339H
RFCC1L: F033AH, RFCC1H: F033BH

	b15	b14	b13	b12	b11	b10	b9	b8	b7	b6	b5	b4	b3	b2	b1	b0
	RFIGCV[2:0]			RFIM	—	RFDC[2:0]			—	—	—	—	—	—	RFIE	RFE
After Reset	0	0	0	0	0	0	0	0	0	0	0	0	0	0	0	0

Bit	Symbol	Bit Name	Description	R/W
15 to 13	RFIGCV[2:0]	Receive FIFO Interrupt Request Timing Select	b15 b14 b13 0 0 0 : When FIFO is 1/8 full. 0 0 1 : When FIFO is 2/8 full. 0 1 0 : When FIFO is 3/8 full. 0 1 1 : When FIFO is 4/8 full. 1 0 0 : When FIFO is 5/8 full. 1 0 1 : When FIFO is 6/8 full. 1 1 0 : When FIFO is 7/8 full. 1 1 1 : When FIFO is full.	R/W
12	RFIM	Receive FIFO Interrupt Source Select	0: An interrupt occurs when the condition set by the RFIGCV[2:0] bits is met. 1: An interrupt occurs each time a message has been received.	R/W
11	—	Reserved	This bit is always read as 0. The write value should always be 0.	R
10 to 8	RFDC[2:0]	Receive FIFO Buffer Depth Configuration	b10 b9 b8 0 0 0 : 0 messages 0 0 1 : 4 messages 0 1 0 : 8 messages 0 1 1 : 16 messages 1 0 0 : Setting prohibited 1 0 1 : Setting prohibited 1 1 0 : Setting prohibited 1 1 1 : Setting prohibited	R/W
7 to 2	—	Reserved	These bits are always read as 0. The write value should always be 0.	R
1	RFIE	Receive FIFO Interrupt Enable	0: Receive FIFO interrupt is disabled. 1: Receive FIFO interrupt is enabled.	R/W
0	RFE	Receive FIFO Buffer Enable	0: No receive FIFO buffer is used. 1: Receive FIFO buffers are used.	R/W

- RFIGCV[2:0] Bits
  These bits are used to specify the fraction of the transmit/receive FIFO buffer (the number of messages is selected by the setting of the RFDC[2:0] bits) that must be filled for the FIFO buffer to generate a receive interrupt request when the RFIM bit is set to 0.
  When the RFDC[2:0] bits are set to B'001 (4 messages), set the RFIGCV[2:0] bits to B'001, B'011, B'101, or B'111. Modify these bits only in global reset mode.

- RFIM Bit
  This bit is used to select a FIFO interrupt source. Modify this bit only in global reset mode.

- RFDC[2:0] Bits
  These bits are used to select the number of messages that can be stored in a single receive FIFO buffer. If these bits are set to B'000, do not use any receive FIFO buffer. Modify these bits only in global reset mode.

- RFIE Bit
  Setting the RFIE bit to 1 enables receive FIFO interrupts. Modify this bit when the RFE bit is set to 0 (no receive FIFO buffer is used).

- RFE Bit
  Setting the RFE bit to 1 makes receive FIFO buffers available. Clearing this bit to 0 sets the RFEMP flag in the RFSTSm register to 1 (the receive FIFO buffer contains no unread message (buffer empty)). Modify this bit only in global operating mode or global test mode.

18.3.35 CAN Receive FIFO Status Register m (RFSTSm) (m = 0, 1)

Address RFSTS0L: F0340H, RFSTS0H: F0341H
RFSTS1L: F0342H, RFSTS1H: F0343H

	b15	b14	b13	b12	b11	b10	b9	b8	b7	b6	b5	b4	b3	b2	b1	b0
	—	—	RFMC[5:0]						—	—	—	—	RFIF	RFMLT	RFFLL	RFEMP
After Reset	0	0	0	0	0	0	0	0	0	0	0	0	0	0	0	1

Bit	Symbol	Bit Name	Description	R/W
15, 14	—	Reserved	These bits are always read as 0. The write value should always be 0.	R
13 to 8	RFMC[5:0]	Receive FIFO Unread Message Counter	The number of unread messages stored in the receive FIFO buffer is displayed.	R
7 to 4	—	Reserved	These bits are always read as 0. The write value should always be 0.	R
3	RFIF	Receive FIFO Interrupt Request Flag	0: No receive FIFO interrupt request is present. 1: A receive FIFO interrupt request is present.	R/(W)Note
2	RFMLT	Receive FIFO Message Lost Flag	0: No receive FIFO message is lost. 1: A receive FIFO message is lost.	R/(W)Note
1	RFFLL	Receive FIFO Buffer Full Status Flag	0: The receive FIFO buffer is not full. 1: The receive FIFO buffer is full.	R
0	RFEMP	Receive FIFO Buffer Empty Status Flag	0: The receive FIFO buffer contains unread messages. 1: The receive FIFO buffer contains no unread message (buffer empty).	R

Note The only effective value for writing to this flag bit is 0, which clears the bit. Otherwise writing to the bit results in retention of its state. To write 0 to this flag bit, write by using an 8-bit data transfer instruction or a 16-bit data transfer instruction.

- RFMC[5:0] Flag
  This flag indicates the number of unread messages in the receive FIFO buffer. This flag becomes H'00 when the RFE bit in the RFCCm register is set to 0.

- RFIF Flag
  This flag is set to 1 when the receive FIFO interrupt request generation conditions set by the RFIGCV[2:0] bits and the RFIM bit in the RFCCm register are met. This flag is cleared to 0 in global reset mode or by writing 0 to this flag. Modify this bit only in global operating mode or global test mode.

- RFMLT Flag
  This flag is set to 1 when it is attempted to store a new message while the receive FIFO buffer is full. In this case, the new message is discarded.
  This flag is cleared to 0 in global reset mode or by writing 0 to this flag.
  Modify this bit only in global operating mode or global test mode.

- RFFLL Flag
  This flag is set to 1 when the number of messages stored in the receive FIFO buffer matches the FIFO buffer depth set by the RFDC[2:0] bits in the RFCCm register.
  If the number of messages stored in the receive FIFO buffer becomes smaller than the FIFO buffer depth set by the RFDC[2:0] bits, this flag is cleared to 0. This flag is also cleared to 0 when the RFE bit in the RFCCm register is set to 0 (no receive FIFO buffer is used) or in global reset mode.

- RFEMP Flag
  This flag is set to 1 when all messages in the receive FIFO buffer have been read. This flag is also set to 1 when the RFE bit in the RFCCm register is 0 or in global reset mode.
  This flag is cleared to 0 when even a single received message has been stored in the receive FIFO buffer.

18.3.36 CAN Receive FIFO Pointer Control Register m (RFPCTRm) (m = 0, 1)

Address RFPCTR0L: F0348H, RFPCTR0H: F0349H
RFPCTR1L: F034AH, RFPCTR1H: F034BH

	b15	b14	b13	b12	b11	b10	b9	b8	b7	b6	b5	b4	b3	b2	b1	b0
	—	—	—	—	—	—	—	—	RFPC[7:0]							
After Reset	0	0	0	0	0	0	0	0	0	0	0	0	0	0	0	0

Bit	Symbol	Bit Name	Description	R/W
15 to 8	—	Reserved	The write value should always be 0.	R
7 to 0	RFPC[7:0]	Receive FIFO Pointer	When these bits are set to H'FF, the read pointer moves to the next unread message in the receive FIFO buffer. The setting for these bits must be H'FF.	W

- RFPC[7:0] Bits
  When the RFPC[7:0] bits are set to H'FF, the read pointer moves to the next unread message in the receive FIFO buffer. At this time, the RFMC[5:0] (receive FIFO unread message counter) value in the RFSTSm register is decremented. Read the RFIDLm, RFIDHm, RFTSm, RFPTRm, and RFDF0m to RFDF3m registers to read messages in the receive FIFO buffer, and then write H'FF to the RFPC[7:0] bits.
  Write H'FF to these bits when the RFE bit in the RFCCm register is set to 1 (receive FIFO buffers are used) and the RFEMP flag in the RFSTSm register is 0 (the receive FIFO buffer contains unread messages).

18.3.37 CAN Receive FIFO Access Register mAL (RFIDLm) (m = 0, 1)

Address RFIDL0L: F05A0H, RFIDL0H: F05A1H
RFIDL1L: F05B0H, RFIDL1H: F05B1H

	b15	b14	b13	b12	b11	b10	b9	b8	b7	b6	b5	b4	b3	b2	b1	b0
	RFID[15:0]															
After Reset	0	0	0	0	0	0	0	0	0	0	0	0	0	0	0	0

Bit	Symbol	Bit Name	Description	R/W
15 to 0	RFID[15:0]	Receive FIFO Buffer ID Data L	The standard ID or extended ID of received message can be read. Read bits 10 to 0 for standard ID. Bits 15 to 11 are read as 0.	R

This register can be read when the RPAGE bit in the GRWCR register is 1.

- RFID[15:0] Bits
  These bits indicate the ID of the message stored in the receive FIFO buffer.

18.3.38 CAN Receive FIFO Access Register mAH (RFIDHm) (m = 0, 1)

Address RFIDH0L: F05A2H, RFIDH0H: F05A3H
RFIDH1L: F05B2H, RFIDH1H: F05B3H

	b15	b14	b13	b12	b11	b10	b9	b8	b7	b6	b5	b4	b3	b2	b1	b0
	RFIDE	RFRTR	—	RFID[28:16]												
After Reset	0	0	0	0	0	0	0	0	0	0	0	0	0	0	0	0

Bit	Symbol	Bit Name	Description	R/W
15	RFIDE	Receive FIFO Buffer IDE	0: Standard ID 1: Extended ID	R
14	RFRTR	Receive FIFO Buffer RTR	0: Data frame 1: Remote frame	R
13	—	Reserved	This bit is always read as 0.	R
12 to 0	RFID[28:16]	Receive FIFO Buffer ID Data H	The standard ID or extended ID of received message can be read. For standard ID, these bits are read as 0.	R

This register can be read when the RPAGE bit in the GRWCR register is 1.

- RFIDE Bit
  This bit indicates the ID format (standard ID or extended ID) of the message stored in the receive FIFO buffer.

- RFRTR Bit
  This bit indicates the frame format (data frame or remote frame) of the message stored in the receive FIFO buffer.

- RFID[28:16] Bits
  These bits indicate the ID of the message stored in the receive FIFO buffer.

18.3.39 CAN Receive FIFO Access Register mBL (RFTSm) (m = 0, 1)

Address RFTS0L: F05A4H, RFTS0H: F05A5H
RFTS1L: F05B4H, RFTS1H: F05B5H

	b15	b14	b13	b12	b11	b10	b9	b8	b7	b6	b5	b4	b3	b2	b1	b0
	RFTS[15:0]															
After Reset	0	0	0	0	0	0	0	0	0	0	0	0	0	0	0	0

Bit	Symbol	Bit Name	Description	R/W
15 to 0	RFTS[15:0]	Receive FIFO Buffer Timestamp Data	Timestamp value of the received message can be read.	R

This register can be read when the RPAGE bit in the GRWCR register is 1.

- RFTS[15:0]
  These bits indicate the timestamp value of the message stored in the receive FIFO buffer.

18.3.40 CAN Receive FIFO Access Register mBH (RFPTRm) (m = 0, 1)

Address RFPTR0L: F05A6H, RFPTR0H: F05A7H
RFPTR1L: F05B6H, RFPTR1H: F05B7H

	b15	b14	b13	b12	b11	b10	b9	b8	b7	b6	b5	b4	b3	b2	b1	b0
	RFDLC[3:0]				RFPTR[11:0]											
After Reset	0	0	0	0	0	0	0	0	0	0	0	0	0	0	0	0

Bit	Symbol	Bit Name	Description	R/W
15 to 12	RFDLC[3:0]	Receive FIFO Buffer DLC Data	b15 b14 b13 b12 0 0 0 0 : 0 data bytes 0 0 0 1 : 1 data byte 0 0 1 0 : 2 data bytes 0 0 1 1 : 3 data bytes 0 1 0 0 : 4 data bytes 0 1 0 1 : 5 data bytes 0 1 1 0 : 6 data bytes 0 1 1 1 : 7 data bytes 1 X X X : 8 data bytes	R
11 to 0	RFPTR[11:0]	Receive FIFO Buffer Label Data	Label information of the received message can be read.	R

This register can be read when the RPAGE bit in the GRWCR register is 1.

- RFDLC[3:0] Bits
  These bits indicate the data length of the message stored in the receive FIFO buffer.

- RFPTR[11:0] Bits
  These bits indicate the label information of the message stored in the receive FIFO buffer.

18.3.41 CAN Receive FIFO Access Register mCL (RFDF0m) (m = 0, 1)

Address RFDF00L: F05A8H, RFDF00H: F05A9H
RFDF01L: F05B8H, RFDF01H: F05B9H

	b15	b14	b13	b12	b11	b10	b9	b8	b7	b6	b5	b4	b3	b2	b1	b0
	RFDB1[7:0]								RFDB0[7:0]							
After Reset	0	0	0	0	0	0	0	0	0	0	0	0	0	0	0	0

Bit	Symbol	Bit Name	Description	R/W
15 to 8	RFDB1[7:0]	Receive FIFO Buffer Data Byte 1	Data in the message stored in the receive FIFO buffer can be read.	R
7 to 0	RFDB0[7:0]	Receive FIFO Buffer Data Byte 0		R

When the RFDLC[3:0] value in the RFPTRm register is smaller than B'1000, data bytes for which no data is set are read as H'00.

This register can be read when the RPAGE bit in the GRWCR register is 1.

18.3.42 CAN Receive FIFO Access Register mCH (RFDF1m) (m = 0, 1)

Address RFDF10L: F05AAH, RFDF10H: F05ABH
RFDF11L: F05BAH, RFDF11H: F05BBH

	b15	b14	b13	b12	b11	b10	b9	b8	b7	b6	b5	b4	b3	b2	b1	b0
	RFDB3[7:0]								RFDB2[7:0]							
After Reset	0	0	0	0	0	0	0	0	0	0	0	0	0	0	0	0

Bit	Symbol	Bit Name	Description	R/W
15 to 8	RFDB3[7:0]	Receive FIFO Buffer Data Byte 3	Data in the message stored in the receive FIFO buffer can be read.	R
7 to 0	RFDB2[7:0]	Receive FIFO Buffer Data Byte 2		R

When the RFDLC[3:0] value in the RFPTRm register is smaller than B'1000, data bytes for which no data is set are read as H'00.

This register can be read when the RPAGE bit in the GRWCR register is 1.

18.3.43 CAN Receive FIFO Access Register mDL (RFDF2m) (m = 0, 1)

Address RFDF20L: F05ACH, RFDF20H: F05ADH
RFDF21L: F05BCH, RFDF21H: F05BDH

	b15	b14	b13	b12	b11	b10	b9	b8	b7	b6	b5	b4	b3	b2	b1	b0
	RFDB5[7:0]								RFDB4[7:0]							
After Reset	0	0	0	0	0	0	0	0	0	0	0	0	0	0	0	0

Bit	Symbol	Bit Name	Description	R/W
15 to 8	RFDB5[7:0]	Receive FIFO Buffer Data Byte 5	Data in the message stored in the receive FIFO buffer can be read.	R
7 to 0	RFDB4[7:0]	Receive FIFO Buffer Data Byte 4		R

When the RFDLC[3:0] value in the RFPTRm register is smaller than B'1000, data bytes for which no data is set are read as H'00.

This register can be read when the RPAGE bit in the GRWCR register is 1.

18.3.44 CAN Receive FIFO Access Register mDH (RFDF3m) (m = 0, 1)

Address RFDF30L: F05AEH, RFDF30H: F05AFH
RFDF31L: F05BEH, RFDF31H: F05BFH

	b15	b14	b13	b12	b11	b10	b9	b8	b7	b6	b5	b4	b3	b2	b1	b0
	RFDB7[7:0]								RFDB6[7:0]							
After Reset	0	0	0	0	0	0	0	0	0	0	0	0	0	0	0	0

Bit	Symbol	Bit Name	Description	R/W
15 to 8	RFDB7[7:0]	Receive FIFO Buffer Data Byte 7	Data in the message stored in the receive FIFO buffer can be read.	R
7 to 0	RFDB6[7:0]	Receive FIFO Buffer Data Byte 6		R

When the RFDLC[3:0] value in the RFPTRm register is smaller than B'1000, data bytes for which no data is set are read as H'00.

This register can be read when the RPAGE bit in the GRWCR register is 1.

18.3.45 CANi Transmit/Receive FIFO Control Register kL (CFCCLk) (i = 0) (k = 0)

Address CFCCL0L: F0350H, CFCCL0H: F0351H

	b15	b14	b13	b12	b11	b10	b9	b8	b7	b6	b5	b4	b3	b2	b1	b0
	CFIGCV[2:0]			CFIM	—	CFDC[2:0]			—	—	—	—	—	CFTXIE	CFRXIE	CFE
After Reset	0	0	0	0	0	0	0	0	0	0	0	0	0	0	0	0

Bit	Symbol	Bit Name	Description	R/W
15 to 13	CFIGCV[2:0]	Transmit/Receive FIFO Receive Interrupt Request Timing Select	b15 b14 b13 0 0 0 : When FIFO is 1/8 full. 0 0 1 : When FIFO is 2/8 full. 0 1 0 : When FIFO is 3/8 full. 0 1 1 : When FIFO is 4/8 full. 1 0 0 : When FIFO is 5/8 full. 1 0 1 : When FIFO is 6/8 full. 1 1 0 : When FIFO is 7/8 full. 1 1 1 : When FIFO is full.	R/W
12	CFIM	Transmit/Receive FIFO Interrupt Source Select	0: • Receive mode When the number of received messages has met the condition set by the CFIGCV[2:0] bits, a FIFO receive interrupt request is generated. • Transmit mode When the buffer becomes empty upon completion of message transmission, a FIFO transmit interrupt request is generated. 1: • Receive mode A FIFO receive interrupt request is generated each time a message has been received. • Transmit mode A FIFO transmit interrupt request is generated each time a message has been transmitted.	R/W
11	—	Reserved	This bit is always read as 0. The write value should always be 0.	R
10 to 8	CFDC[2:0]	Transmit/Receive FIFO Buffer Depth Configuration	b10 b9 b8 0 0 0 : 0 messages 0 0 1 : 4 messages 0 1 0 : 8 messages 0 1 1 : 16 messages 1 0 0 : Setting prohibited 1 0 1 : Setting prohibited 1 1 0 : Setting prohibited 1 1 1 : Setting prohibited	R/W
7 to 3	—	Reserved	These bits are always read as 0. The write value should always be 0.	R
2	CFTXIE	Transmit/Receive FIFO Transmit Interrupt Enable	0: Transmit/receive FIFO transmit interrupt is disabled. 1: Transmit/receive FIFO transmit interrupt is enabled.	R/W
1	CFRXIE	Transmit/Receive FIFO Receive Interrupt Enable	0: Transmit/receive FIFO receive interrupt is disabled. 1: Transmit/receive FIFO receive interrupt is enabled.	R/W
0	CFE	Transmit/Receive FIFO Buffer Enable	0: No transmit/receive FIFO buffer is used. 1: Transmit/receive FIFO buffers are used.	R/W

- CFIGCV[2:0] Bits
  These bits are used to specify the fraction of the transmit/receive FIFO buffer (the number of messages is selected by the setting of the CFDC[2:0] bits) that must be filled for the FIFO buffer to generate a receive interrupt request when the CFM[1:0] bits are set to B'00 (reception mode) and the CFIM bit is set to 0.
  When the CFDC[2:0] bits are set to B'001 (4 messages), set the CFIGCV[2:0] bits to B'001, B'011, B'101, or B'111.
  Modify these bits only in global reset mode.

- CFIM Bit
  This bit is used to select a transmit/receive FIFO interrupt source. Modify this bit only in global reset mode.

- CFDC[2:0] Bits
  These bits are used to set the number of messages that can be stored in a single transmit/receive FIFO buffer. If these bits are set to B'000, do not use any receive FIFO buffer. Modify these bits only in global reset mode.

- CFTXIE Bit
  When this bit is set to 1 and the CFTXIF flag in the CFSTSk register is set to 1, a transmit/receive FIFO transmit interrupt request is generated.
  Modify this bit with the CFE bit set to 0 (no transmit/receive FIFO buffer is used).

- CFRXIE Bit
  When this bit is set to 1 and the CFRXIF flag in the CFSTSk register is set to 1, a transmit/receive FIFO receive interrupt request is generated.
  Modify this bit with the CFE bit set to 0.

- CFE Bit
  Setting this bit to 1 makes transmit/receive FIFO buffers available.
  When this bit is set to 0 in transmit mode, if a message in the transmit/receive FIFO buffer is being transmitted or to be transmitted next, the transmit/receive FIFO buffer becomes empty after completion of transmission, CAN bus error detection, or arbitration lost. In other cases or in receive mode, the transmit/receive FIFO buffer becomes empty immediately.

  This bit is cleared to 0 when the following conditions are met.
  - Receive mode: Global reset mode
  - Transmit mode: Channel reset mode

  Modify this bit only in the following mode.
  - Receive mode: Global operating mode or global test mode
  - Transmit mode: Channel communication mode or channel halt mode

18.3.46 CANi Transmit/Receive FIFO Control Register kH (CFCCHk) (i = 0) (k = 0)

Address CFCCH0L: F0352H, CFCCH0H: F0353H

	b15	b14	b13	b12	b11	b10	b9	b8	b7	b6	b5	b4	b3	b2	b1	b0
	CFITT[7:0]								—	—	CFTML[1:0]		CF ITR	CF ITSS	CFM[1:0]	
After Reset	0	0	0	0	0	0	0	0	0	0	0	0	0	0	0	0

Bit	Symbol	Bit Name	Description	R/W
15 to 8	CFITT[7:0]	Message Transmission Interval Configuration	Set a message transmission interval. Set these bits to a value within a range of H'00 to H'FF.	R/W
7, 6	—	Reserved	These bits are always read as 0. The write value should always be 0.	R
5, 4	CFTML[1:0]	Transmit Buffer Link Configuration	Set the transmit buffer number to be linked to the transmit/receive FIFO buffer.	R/W
3	CFITR	Transmit/Receive FIFO Interval Timer Resolution	0: Clock obtained by frequency-dividing $f_{CLK}/2$ by the ITRCP[15:0] value 1: Clock obtained by frequency-dividing $f_{CLK}/2$ by the ITRCP[15:0] value × 10	R/W
2	CFITSS	Interval Timer Clock Source Select	0: Clock selected by the CFITR bit 1: CANi bit time clock	R/W
1, 0	CFM[1:0]	Transmit/Receive FIFO Mode Select	b1 b0 0 0 : Receive mode 0 1 : Transmit mode 1 0 : Setting prohibited 1 1 : Setting prohibited	R/W

- CFITT[7:0] Bits
  These bits are used to set a message transmission interval when transmitting messages continuously from a transmit/receive FIFO buffer whose CFM[1:0] bits are set to B'01 (transmit mode).
  Clear the CFE bit to 0 (no transmit/receive FIFO buffer is used) and then modify the CFITT[7:0] bits.

- CFTML[1:0] Bits
  These bits are used to set the number of transmit buffer to be linked to the transmit/receive FIFO buffer when the CFM[1:0] bits are set to B'01 (transmit mode).
  Setting the CFDC[2:0] bits to B'001 or more enables the setting of the CFTML[1:0] bits.
  Modify these bits only in global reset mode.

- CFITR Bit
  This bit is valid when the setting of the CFITSS bit is 0.
  Setting this bit to 0 selects the clock obtained by frequency-dividing $f_{CLK}/2$ by the ITRCP[15:0] value.
  Setting this bit to 1 selects the clock obtained by frequency-dividing $f_{CLK}/2$ by the ITRCP[15:0] value × 10.
  Modify the CFITR bit with the CFE bit in theCFCCLk register set to 0 (no transmit/receive FIFO buffer is used).

- CFITSS Bit
  Setting this bit to 0 selects the clock selected by the CFITR bit as the clock source for counting by the interval timer.
  Setting this bit to 1 selects the CANi bit time clock as the clock source for counting by the interval timer. Clear the CFE bit to 0 (no transmit/receive FIFO buffer is used) before modifying the CFITSS bit.

- CFM[1:0] Bits
  These bits are used to select transmit/receive FIFO mode. Modify these bits only in global reset mode.

18.3.47 CANi Transmit/Receive FIFO Status Register k (CFSTSk) (i = 0) (k = 0)

Address CFSTS0L: F0358H, CFSTS0H: F0359H

	b15	b14	b13	b12	b11	b10	b9	b8	b7	b6	b5	b4	b3	b2	b1	b0
	—	—	CFMC[5:0]						—	—	—	CF TXIF	CF RXIF	CF MLT	CF FLL	CF EMP
After Reset	0	0	0	0	0	0	0	0	0	0	0	0	0	0	0	1

Bit	Symbol	Bit Name	Description	R/W
15, 14	—	Reserved	These bits are always read as 0. The write value should always be 0.	R
13 to 8	CFMC[5:0]	Transmit/Receive FIFO Message Counter	The number of messages stored in the transmit/receive FIFO buffer is indicated.	R
7 to 5	—	Reserved	These bits are always read as 0. The write value should always be 0.	R
4	CFTXIF	Transmit/Receive FIFO Transmit Interrupt Request Flag	0: No transmit/receive FIFO transmit interrupt request is present. 1: A transmit/receive FIFO transmit interrupt request is present.	R/(W)**Note**
3	CFRXIF	Transmit/Receive FIFO Receive Interrupt Request Flag	0: No transmit/receive FIFO receive interrupt request is present. 1: A transmit/receive FIFO receive interrupt request is present.	R/(W)**Note**
2	CFMLT	Transmit/Receive FIFO Message Lost Flag	0: No transmit/receive FIFO message is lost. 1: A transmit/receive FIFO message is lost.	R/(W)**Note**
1	CFFLL	Transmit/Receive FIFO Buffer Full Status Flag	0: The transmit/receive FIFO buffer is not full. 1: The transmit/receive FIFO buffer is full.	R
0	CFEMP	Transmit/Receive FIFO Buffer Empty Status Flag	0: The transmit/receive FIFO buffer contains messages. 1: The transmit/receive FIFO buffer contains no message (buffer empty).	R

Note The only effective value for writing to this flag bit is 0, which clears the bit. Otherwise writing to the bit results in retention of its state. To write 0 to this flag bit, write by using an 8-bit data transfer instruction or a 16-bit data transfer instruction.

<R> In case this bit is set to 1 by the CAN module and cleared to 0 by the CPU instruction at the same time, the setting by the CAN module is prioritized. For the details, refer to chapter "18.14 Notes on the CAN Module"

- CFMC[5:0] Bits

  The CFMC[5:0] bits indicate the following values that depend on the setting of the CFM[1:0] bits in the CFCCHk register.

  - When CFM[1:0] value is B'01 (transmit mode): Number of untransmitted messages in the buffer
  - When CFM[1:0] value is B'00 (receive mode): Number of unread received messages in the buffer

  These bits are cleared to 0 when any of the following conditions is met.

  - When CFM[1:0] value is B'00: In global reset mode
  - When CFM[1:0] value is B'01: In channel reset mode

- CFTXIF Flag

  The CFTXIF flag is set to 1 when the following condition is met.
  - When CFM[1:0] value is B'01 and interrupt source setting the CFIM bit in the CFCCLk register is generated.

  The CFTXIF flag is cleared to 0 when any of the following conditions is met.
  - Write 0 to the CFTXIF flag
  - When CFM[1:0] value is B'00: In global reset mode
  - When CFM[1:0] value is B'01: In channel reset mode

  Clear this flag to 0 in global operating mode or global test mode.

- CFRXIF Flag

  The CFRXIF flag is set to 1 when the following condition is met.
  - When CFM[1:0] value is B'00 and interrupt source setting the CFIM bit in the CFCCLk register is generated.

  The CFRXIF flag is cleared to 0 when any of the following conditions is met.
  - Write 0 to the CFRXIF flag
  - When CFM[1:0] value is B'00: In global reset mode
  - When CFM[1:0] value is B'01: In channel reset mode

  Clear this flag to 0 in global operating mode or global test mode.

- CFMLT Flag

  The CFMLT flag is set to 1 when the following condition is met.
  - When it is attempted to store a new message while the transmit/receive FIFO buffer is full. In this case, the new message is discarded.

  The CFMLT flag is cleared to 0 when any of the following conditions is met.
  - Write 0 to the CFMLT flag
  - When CFM[1:0] value is B'00: In global reset mode
  - When CFM[1:0] value is B'01: In channel reset mode

  Clear this flag to 0 in global operating mode or global test mode.

- CFFLL Flag

  The CFFLL flag is set to 1 when the following condition is met.
  - When the number of messages stored in the transmit/receive FIFO buffer matches the FIFO buffer depth set by the CFDC[2:0] bits in the CFCCLk register.

  The CFFLL flag is cleared to 0 when any of the following conditions is met.
  - When the number of messages stored in the transmit/receive FIFO buffer becomes smaller than the FIFO buffer depth set by the CFDC[2:0] bits.
  - When the CFE value in the CFCCLk register is 0 (no transmit/receive FIFO buffer is used).

    Note that this flag is set to 0 after transmission completion, CAN bus error detection, or arbitration lost when the message in the transmit/receive FIFO buffer is being transmitted or to be transmitted next.
  - When CFM[1:0] value is B'00: In global reset mode
  - When CFM[1:0] value is B'01: In channel reset mode

- CFEMP Flag

  The CFEMP flag is set to 1 when any of the following conditions is met.

  - When the CFM[1:0] value is B'00: All messages have been read, or global reset mode.
  - When the CFM[1:0] value is B'01: All messages have been transmitted, or channel reset mode.
  - When the CFE value in the CFCCLk register is 0 (no transmit/receive FIFO buffer is used).

    Note that this flag is set to 1 after transmission completion, CAN bus error detection, or arbitration lost when the message in the transmit/receive FIFO buffer is being transmitted or to be transmitted next.

  The CFEMP flag is cleared to 0 when any of the following conditions is met.

  - When the CFM[1:0] value is B'00: Any one of received messages has been stored in the transmit/receive FIFO buffer.
  - When the CFM[1:0] value is B'01: A value H'FF has been written to the CFPCTRk register after data was written to the CFIDLk, CFIDHk, CFPTRk, and CFDF0k to CFDF3k registers.

18.3.48 CANi Transmit/Receive FIFO Pointer Control Register k (CFPCTRk) (i = 0) (k = 0)

Address CFPCTR0L: F035CH

	b15	b14	b13	b12	b11	b10	b9	b8	b7	b6	b5	b4	b3	b2	b1	b0
	—	—	—	—	—	—	—	—	CFPC[7:0]							
After Reset	0	0	0	0	0	0	0	0	0	0	0	0	0	0	0	0

Bit	Symbol	Bit Name	Description	R/W
15 to 8	—	Reserved	The write value should always be 0.	R
7 to 0	CFPC[7:0]	CANi Transmit/Receive FIFO Pointer	Receive mode: Writing H'FF to these bits moves the read pointer to the next unread message in the transmit/receive FIFO buffer. Transmit mode: Writing H'FF to these bits moves the write pointer to the next stage of the transmit/receive FIFO buffer.	W

- CFPC[7:0] Bits

  Receive mode (CFM [1:0] value in the CFCCHk register is B'00):
  Writing H'FF to the CFPC[7:0] bits moves the read pointer to the next unread message in the transmit/receive FIFO buffer. At this time, the CFMC[5:0] value (transmit/receive FIFO message counter) in the CFSTSk register is decremented. Read the CFIDLk, CFIDHk, CFTSk, CFPTRk, and CFDF0k to CFDF3k registers to read messages in the transmit/receive FIFO buffer, and then write H'FF to the CFPC[7:0] bits.
  Write H'FF to these bits when the CFE bit in the CFCCLk register is set to 1 (transmit/receive FIFO buffers are used) and the CFEMP flag in the CFSTSk register is cleared to 0 (the transmit/receive FIFO buffer contains messages).

  Transmit mode (CFM [1:0] value in the CFCCHk register is B'01):
  Writing H'FF to the CFPC[7:0] bits stores the data written to the CFIDLk, CFIDHk, CFPTRk, and CFDF0k to CFDF3k registers in the transmit/receive FIFO buffer and moves the write pointer to the next stage of the transmit/receive FIFO buffer. At this time, the CFMC[5:0] value is incremented. Write transmit messages to the CFIDLk, CFIDHk, CFPTRk, and CFDF0k to CFDF3k registers and then write H'FF to the CFPC[7:0] bits.
  Write H'FF to these bits when the CFE bit in the CFCCLk register is set to 1 and the CFFLL flag in the CFSTSk register is cleared to 0 (the transmit/receive FIFO buffer is not full).

18.3.49 CANi Transmit/Receive FIFO Access Register kAL (CFIDLk) (i = 0) (k = 0)

Address CFIDL0L: F05E0H, CFIDL0H: F05E1H

	b15	b14	b13	b12	b11	b10	b9	b8	b7	b6	b5	b4	b3	b2	b1	b0
	CFID[15:0]															
After Reset	0	0	0	0	0	0	0	0	0	0	0	0	0	0	0	0

Bit	Symbol	Bit Name	Description	R/W
15 to 0	CFID[15:0]	Transmit/Receive FIFO Buffer ID Data L	When CFM[1:0] value is B'01 (transmit mode): Set standard ID or extended ID. For standard ID, write an ID to bits 10 to 0 and write 0 to bits 15 to 11. When CFM[1:0] value is B'00 (receive mode): Standard ID or extended ID in the received message can be read. For standard ID, read bits 10 to 0. Bits 15 to 11 are read as 0.	R/W

Modify these bits only when the CFM[1:0] value in the CFCCHk register is B'01 (transmit mode). This register is readable only when the CFM[1:0] value is B'00 (receive mode).

This register can be read/written when the RPAGE bit in the GRWCR register is 1.

- CFID[15:0] Bits
  These bits indicate the ID of the received message stored in the transmit/receive FIFO buffer when the CFM [1:0] value is B'00.
  When the CFM [1:0] value is B'01, set the ID of the message to be transmitted from the transmit/receive FIFO buffer.

18.3.50 CANi Transmit/Receive FIFO Access Register kAH (CFIDHk) (i = 0) (k = 0)

Address CFIDH0L: F05E2H, CFIDH0H: F05E3H

	b15	b14	b13	b12	b11	b10	b9	b8	b7	b6	b5	b4	b3	b2	b1	b0
	CFIDE	CFRTR	THLEN	CFID[28:16]												
After Reset	0	0	0	0	0	0	0	0	0	0	0	0	0	0	0	0

Bit	Symbol	Bit Name	Description	R/W
15	CFIDE	Transmit/Receive FIFO Buffer IDE	0: Standard ID 1: Extended ID	R/W
14	CFRTR	Transmit/Receive FIFO Buffer RTR	0: Data frame 1: Remote frame	R/W
13	THLEN	Transmit History Data Store Enable	This bit is valid only when the CFM[1:0] value is B'01 (transmit mode). 0: Transmit history data is not stored in the buffer. 1: Transmit history data is stored in the buffer.	R/W
12 to 0	CFID[28:16]	Transmit/Receive FIFO Buffer ID Data H	When CFM[1:0] value is B'01 (transmit mode): Set standard ID or extended ID. For standard ID, write 0 to these bits. When CFM[1:0] value is B'00 (receive mode): Standard ID or extended ID in the received message can be read. For standard ID, these bits are read as 0.	R/W

Modify these bits only when the CFM[1:0] value in the CFCCHk register is B'01 (transmit mode). This register is readable only when the CFM[1:0] value is B'00 (receive mode).

This register can be read/written when the RPAGE bit in the GRWCR register is 1.

- CFIDE Bit
  This bit indicates the ID format (standard ID or extended ID) of the received message stored in the transmit/receive FIFO buffer when the CFM[1:0] value is B'00. When the CFM [1:0] value is B'01, set the ID format of the message to be transmitted from the transmit/receive FIFO buffer.

- CFRTR Bit
  This bit indicates the data format (data frame or remote frame) of the received message stored in the transmit/receive FIFO buffer when the CFM [1:0] value is B'00. When the CFM [1:0] value is B'01, set the data format of the message to be transmitted from the transmit/receive FIFO buffer.

- THLEN Bit
  When this bit is set to 1, the transmit history data (label information, buffer number, and buffer type) of transmit messages is stored in the transmit history buffer after transmission is completed.
  This bit is enabled when the CFM [1:0] value is B'01 (transmit mode).

- CFID[28:16] Bits
  These bits indicate the ID of the received message stored in the transmit/receive FIFO buffer when the CFM [1:0] value is B'00.
  When the CFM[1:0] value is B'01, set the ID of the message to be transmitted from the transmit/receive FIFO buffer.

18.3.51 CANi Transmit/Receive FIFO Access Register kBL (CFTSk) (i = 0) (k = 0)

Address CFTS0L: F05E4H, CFTS0H: F05E5H

	b15	b14	b13	b12	b11	b10	b9	b8	b7	b6	b5	b4	b3	b2	b1	b0
	CFTS[15:0]															
After Reset	0	0	0	0	0	0	0	0	0	0	0	0	0	0	0	0

Bit	Symbol	Bit Name	Description	R/W
15 to 0	CFTS[15:0]	Transmit/Receive FIFO Buffer Timestamp Data	These bits are valid only when the CFM[1:0] value is B'00 (receive mode). The timestamp value of the received message can be read.	R

This register can be read when the RPAGE bit in the GRWCR register is 1.

- CFTS[15:0] Bits
  These bits indicate the timestamp value of the message stored in the transmit/receive FIFO buffer.
  These bits are valid when the CFM[1:0] value is B'00.

18.3.52 CANi Transmit/Receive FIFO Access Register kBH (CFPTRk) (i = 0) (k = 0)

Address CFPTR0L: F05E6H, CFPTR0H: F05E7H

	b15	b14	b13	b12	b11	b10	b9	b8	b7	b6	b5	b4	b3	b2	b1	b0
	CFDLC[3:0]				CFPTR[11:0]											
After Reset	0	0	0	0	0	0	0	0	0	0	0	0	0	0	0	0

Bit	Symbol	Bit Name	Description	R/W
15 to 12	CFDLC[3:0]	Transmit/Receive FIFO Buffer DLC Data	b15 b14 b13 b12 0 0 0 0: 0 data bytes 0 0 0 1: 1 data byte 0 0 1 0: 2 data bytes 0 0 1 1: 3 data bytes 0 1 0 0: 4 data bytes 0 1 0 1: 5 data bytes 0 1 1 0: 6 data bytes 0 1 1 1: 7 data bytes 1 X X X: 8 data bytes	R/W
11 to 0	CFPTR[11:0]	Transmit/Receive FIFO Buffer Label Data	When CFM[1:0] value is B'01 (transmit mode): Set the label information to be stored in the transmit history buffer. Only bits CFPTR[7:0] are valid. When CFM[1:0] value is B'00 (receive mode): The label information of the received message can be read.	R/W

Modify these bits only when the CFM[1:0] value in the CFCCHk register is B'01 (transmit mode). This register is readable only when the CFM[1:0] value is B'00 (receive mode).

This register can be read/written when the RPAGE bit in the GRWCR register is 1.

- CFDLC[3:0] Bits
  These bits indicate the data length of the received message stored in the transmit/receive FIFO buffer when the CFM [1:0] value is B'00. When the CFM [1:0] value is B'01, set the data length of the message to be transmitted from the transmit/receive FIFO buffer. If 9-byte or more data length is set, 8 bytes of data is actually transmitted.

- CFPTR[11:0] Bits
  These bits indicate the label information attached to the received message stored in the transmit/receive FIFO buffer when the CFM [1:0] value is B'00. When the CFM [1:0] value is B'01, the CFPTR [7:0] value is stored in the transmit history buffer when message transmission has been completed.

18.3.53 CANi Transmit/Receive FIFO Access Register kCL (CFDF0k) (i = 0) (k = 0)

Address CFDF00L: F05E8H, CFDF00H: F05E9H

	b15	b14	b13	b12	b11	b10	b9	b8	b7	b6	b5	b4	b3	b2	b1	b0
	CFDB1[7:0]								CFDB0[7:0]							
After Reset	0	0	0	0	0	0	0	0	0	0	0	0	0	0	0	0

Bit	Symbol	Bit Name	Description	R/W
15 to 8	CFDB1[7:0]	Transmit/Receive FIFO Buffer Data Byte 1	When CFM[1:0] value is B'01 (transmit mode): Set the transmit/receive FIFO buffer data. When CFM[1:0] value is B'00 (receive mode): The message data stored in the transmit/receive FIFO buffer can be read.	R/W
7 to 0	CFDB0[7:0]	Transmit/Receive FIFO Buffer Data Byte 0		R/W

Modify these bits only when the CFM[1:0] value in the CFCCHk register is B'01.

This register is readable only when the CFM[1:0] value is B'00. When the CFDLC [3:0] value in the CFPTRk register is smaller than B'1000, data bytes for which no data is set are read as H'00.

This register can be read/written when the RPAGE bit in the GRWCR register is 1.

18.3.54 CANi Transmit/Receive FIFO Access Register kCH (CFDF1k) (i = 0) (k = 0)

Address CFDF10L: F05EAH, CFDF10H: F05EBH

	b15	b14	b13	b12	b11	b10	b9	b8	b7	b6	b5	b4	b3	b2	b1	b0
	CFDB3[7:0]								CFDB2[7:0]							
After Reset	0	0	0	0	0	0	0	0	0	0	0	0	0	0	0	0

Bit	Symbol	Bit Name	Description	R/W
15 to 8	CFDB3[7:0]	Transmit/Receive FIFO Buffer Data Byte 3	When CFM[1:0] value is B'01 (transmit mode): Set the transmit/receive FIFO buffer data. When CFM[1:0] value is B'00 (receive mode): The message data stored in the transmit/receive FIFO buffer can be read.	R/W
7 to 0	CFDB2[7:0]	Transmit/Receive FIFO Buffer Data Byte 2		R/W

Modify these bits only when the CFM[1:0] value in the CFCCHk register is B'01.

This register is readable only when the CFM[1:0] value is B'00. When the CFDLC [3:0] value in the CFPTRk register is smaller than B'1000, data bytes for which no data is set are read as H'00.

This register can be read/written when the RPAGE bit in the GRWCR register is 1.

18.3.55 CANi Transmit/Receive FIFO Access Register kDL (CFDF2k) (i = 0) (k = 0)

Address CFDF20L: F05ECH, CFDF20H: F05EDH

	b15	b14	b13	b12	b11	b10	b9	b8	b7	b6	b5	b4	b3	b2	b1	b0
	CFDB5[7:0]								CFDB4[7:0]							
After Reset	0	0	0	0	0	0	0	0	0	0	0	0	0	0	0	0

Bit	Symbol	Bit Name	Description	R/W
15 to 8	CFDB5[7:0]	Transmit/Receive FIFO Buffer Data Byte 5	When CFM[1:0] value is B'01 (transmit mode): Set the transmit/receive FIFO buffer data. When CFM[1:0] value is B'00 (receive mode): The message data stored in the transmit/receive FIFO buffer can be read.	R/W
7 to 0	CFDB4[7:0]	Transmit/Receive FIFO Buffer Data Byte 4		R/W

Modify these bits only when the CFM[1:0] value in the CFCCHk register is B'01.

This register is readable only when the CFM[1:0] value is B'00. When the CFDLC [3:0] value in the CFPTRk register is smaller than B'1000, data bytes for which no data is set are read as H'00.

This register can be read/written when the RPAGE bit in the GRWCR register is 1.

18.3.56 CANi Transmit/Receive FIFO Access Register kDH (CFDF3k) (i = 0) (k = 0)

Address CFDF30L: F05EEH, CFDF30H: F05EFH

	b15	b14	b13	b12	b11	b10	b9	b8	b7	b6	b5	b4	b3	b2	b1	b0
	CFDB7[7:0]								CFDB6[7:0]							
After Reset	0	0	0	0	0	0	0	0	0	0	0	0	0	0	0	0

Bit	Symbol	Bit Name	Description	R/W
15 to 8	CFDB7[7:0]	Transmit/Receive FIFO Buffer Data Byte 7	When CFM[1:0] value is B'01 (transmit mode): Set the transmit/receive FIFO buffer data. When CFM[1:0] value is B'00 (receive mode): The message data stored in the transmit/receive FIFO buffer can be read.	R/W
7 to 0	CFDB6[7:0]	Transmit/Receive FIFO Buffer Data Byte 6		R/W

Modify these bits only when the CFM[1:0] value in the CFCCHk register is B'01.

This register is readable only when the CFM[1:0] value is B'00. When the CFDLC [3:0] value in the CFPTRk register is smaller than B'1000, data bytes for which no data is set are read as H'00.

This register can be read/written when the RPAGE bit in the GRWCR register is 1.

18.3.57 Receive FIFO Message Lost Status Register (RFMSTS)

Address RFMSTS: F0360H

	b7	b6	b5	b4	b3	b2	b1	b0
	—	—	—	—	—	—	RF1MLT	RF0MLT
After Reset	0	0	0	0	0	0	0	0

Bit	Symbol	Bit Name	Description	R/W
7 to 2	—	Reserved	These bits are always read as 0.	R
1	RF1MLT	Receive FIFO Buffer 1 Message Lost Status Flag	0: No receive FIFO buffer m message is lost (m = 0, 1). 1: A receive FIFO buffer m message is lost.	R
0	RF0MLT	Receive FIFO Buffer 0 Message Lost Status Flag		R

The RFMSTS register is cleared to H'00 in global reset mode.

- RFmMLT Flag
  The RFmMLT flag is set to 1 when the RFMLT flag in the RFSTSm register is set to 1 (a receive FIFO message is lost). When the RFMLT flag is cleared to 0, the RFmMLT flag is cleared to 0.

18.3.58 CANi Transmit/Receive FIFO Message Lost Status Register (CFMSTS) (i = 0)

Address CFMSTS: F0361H

	b7	b6	b5	b4	b3	b2	b1	b0
	—	—	—	—	—	—	—	CF0MLT
After Reset	0	0	0	0	0	0	0	0

Bit	Symbol	Bit Name	Description	R/W
7-1	—	Reserved	These bits are always read as 0.	R
0	CF0MLT	CANi Transmit/Receive FIFO Buffer k Message Lost Status Flag	0: No CANi transmit/receive FIFO buffer k message is lost. 1: A CANi transmit/receive FIFO buffer k message is lost.	R

The CFMSTS register is cleared to H'00 in global reset mode.

- CF0MLT Flag
  The CF0MLT flag is set to 1 when the CFMLT flag in the CFSTSk register is set to 1 (a transmit/receive FIFO message is lost). When the CFMLT flag is cleared to 0, the CF0MLT flag is cleared to 0.

18.3.59 CAN Receive FIFO Interrupt Status Register (RFISTS)

Address RFISTS: F0362H

	b7	b6	b5	b4	b3	b2	b1	b0
	—	—	—	—	—	—	RF1IF	RF0IF
After Reset	0	0	0	0	0	0	0	0

Bit	Symbol	Bit Name	Description	R/W
7 to 2	—	Reserved	These bits are always read as 0.	R
1	RF1IF	Receive FIFO Buffer 1 Interrupt Request Status Flag	0: No receive FIFO buffer m interrupt request is present (m = 0, 1). 1: A receive FIFO buffer m interrupt request is present.	R
0	RF0IF	Receive FIFO Buffer 0 Interrupt Request Status Flag		R

The RFISTS register is cleared to H'00 in global reset mode.

- RFmIF Flag
  The RFmIF flag is set to 1 when the RFIF flag in the RFSTSm register is set to 1 (a receive FIFO interrupt request is present). When the RFIF flag is cleared to 0, the RFmIF flag is cleared to 0.

18.3.60 CAN Transmit/Receive FIFO Receive Interrupt Status Register (CFISTS)

Address CFISTS: F0363H

	b7	b6	b5	b4	b3	b2	b1	b0
	—	—	—	—	—	—	—	CF0IF
After Reset	0	0	0	0	0	0	0	0

Bit	Symbol	Bit Name	Description	R/W
7 to 1	—	Reserved	These bits are always read as 0.	R
0	CF0IF	CANi Transmit/Receive FIFO Buffer k Receive Interrupt Request Status Flag	0: No CANi transmit/receive FIFO buffer k receive interrupt request is present. 1: A CANi transmit/receive FIFO buffer k receive interrupt request is present.	R

The CFISTS register is cleared to H'00 in global reset mode.

- CF0IF Flag
  The CF0IF flag is set to 1 when the CFRXIF flag in the CFSTSk register is set to 1 (a transmit/receive FIFO receive interrupt request is present). When the CFRXIF flag is cleared to 0, the CF0IF flag is cleared to 0.

18.3.61 CANi Transmit Buffer Control Register p (TMCp) (i = 0) (p = 0 to 3)

Address TMC0: F0364H, TMC1: F0365H
TMC2: F0366H, TMC3: F0367H

	b7	b6	b5	b4	b3	b2	b1	b0
	—	—	—	—	—	TMOM	TMTAR	TMTR
After Reset	0	0	0	0	0	0	0	0

Bit	Symbol	Bit Name	Description	R/W
7 to 3	—	Reserved	These bits are always read as 0. The write value should always be 0.	R
2	TMOM	One-Shot Transmission Enable	0: One-shot transmission is disabled. 1: One-shot transmission is enabled.	R/W
1	TMTAR	Transmit Abort Request	0: Transmit abort is not requested. 1: Transmit abort is requested.	R/(W)Note
0	TMTR	Transmit Request	0: Transmission is not requested. 1: Transmission is requested.	R/(W)Note

Note The only effective value for writing to this bit is 1, which sets the bit. Otherwise writing to the bit results in retention of its state.

When the TMCp register meets any of the following conditions, set it to H'00.

- The TMCp register corresponds to the transmit buffer number selected by the CFTML[1:0] bits in the CFCCHk register.

Bits in the TMCp register are cleared to all 0 in channel reset mode. Modify the TMCp register only in channel communication mode or channel halt mode.

- TMOM Bit
  Setting this bit to 1 enables one-shot transmission. When transmission fails, retransmission defined in the CAN protocol is not performed.
  Modify the TMOM bit when the TMTRM flag in the TMSTSp register is set to 0. To set the TMOM bit to 1, also set the TMTR bit together.

- TMTAR Bit
  Setting this bit to 1 generates a transmit abort request for the message stored in the transmit buffer. However, a message that is being transmitted or to be transmitted next cannot be aborted.
  When the TMTR bit is set to 1, the TMTAR bit can be set to 1.
  The TMTAR bit is cleared to 0 when any of the following conditions is met, but is not cleared by writing 0 by the program.
  - Transmission has been completed.
  - Transmit abort has been completed.
  - An error or arbitration lost has been detected.

  If this bit becomes 0 at the timing when the program writes 1 to this bit, this bit becomes 0.

- TMTR Bit

  Setting this bit to 1 transmits the message stored in the transmit buffer.

  The TMTR bit is cleared to 0 when any of the following conditions is met, but is not cleared by writing 0 by the program.

  - Transmission has been completed.
  - Transmit abort has been completed by setting the TMTAR bit to 1.
  - An error or arbitration lost has been detected with the TMOM bit set to 1.

  Set the TMTR bit to 1 when the TMTRF[1:0] value in the TMSTSp register is B'00.

18.3.62 CANi Transmit Buffer Status Register p (TMSTSp) (i = 0) (p = 0 to 3)

Address TMSTS0: F036CH, TMSTS1: F036DH
TMSTS2: F036EH, TMSTS3: F036FH

	b7	b6	b5	b4	b3	b2	b1	b0
	—	—	—	TMTARM	TMTRM	TMTRF[1:0]		TMTSTS
After Reset	0	0	0	0	0	0	0	0

Bit	Symbol	Bit Name	Description	R/W
7 to 5	—	Reserved	These bits are always read as 0. The write value should always be 0.	R
4	TMTARM	Transmit Buffer Transmit Abort Request Status Flag	0: No transmit abort request is present. 1: A transmit abort request is present.	R
3	TMTRM	Transmit Buffer Transmit Request Status Flag	0: No transmit request is present. 1: A transmit request is present.	R
2, 1	TMTRF[1:0]	Transmit Buffer Transmit Result Flag	b2 b1 0 0 : Transmission is in progress or no transmit request is present. 0 1 : Transmit abort has been completed. 1 0 : Transmission has been completed (without transmit abort request). 1 1 : Transmission has been completed (with transmit abort request).	R/W
0	TMTSTS	Transmit Buffer Transmit Status Flag	0: Transmission is not in progress. 1: Transmission is in progress.	R

The TMSTSp register is cleared to all 0 in channel reset mode.

- TMTARM Flag
  The TMTARM flag is set to 1 when the TMTAR bit in the TMCp register is set to 1, and is cleared to 0 when the TMTAR bit is set to 0.

- TMTRM Flag
  The TMTRM flag is set to 1 when the TMTR bit in the TMCp register is set to 1, and is cleared to 0 when the TMTR bit is set to 0.

- TMTRF[1:0] Flag
  This flag indicates the result of transmission from the transmit buffer.
  B'00: Transmission is in progress or no transmit request is present.
  B'01: Transmission from the transmit buffer was aborted.
  B'10: Transmission has been completed with the TMTAR bit in the TMCp register set to 0 (transmit abort is not requested).
  B'11: Transmission has been completed with the TMTAR bit in the TMCp register set to 1 (transmit abort is requested).
  Write B'00 to the TMTRF[1:0] flag in channel communication mode or channel halt mode. Do not write any value other than B'00 to this flag.

- TMTSTS Flag
  This flag is set to 1 when transmission from the transmit buffer starts, and is cleared to 0 when transmission from the transmit buffer has been completed or terminated due to a bus error or arbitration lost.

18.3.63 CANi Transmit Buffer Transmit Request Status Register (TMTRSTS) (i = 0)

Address TMTRSTSL: F0374H, TMTRSTSH: F0375H

	b15	b14	b13	b12	b11	b10	b9	b8	b7	b6	b5	b4	b3	b2	b1	b0
	—	—	—	—	—	—	—	—	—	—	—	—	TMTR STS3	TMTR STS2	TMTR STS1	TMTR STS0
After Reset	0	0	0	0	0	0	0	0	0	0	0	0	0	0	0	0

Bit	Symbol	Bit Name	Description	R/W
15 to 4	—	Reserved	These bits are always read as 0.	R
3	TMTRSTS3	CANi Transmit Buffer 3 Transmit Request Status Flag	0: No transmit request is present. 1: A transmit request is present.	R
2	TMTRSTS2	CANi Transmit Buffer 2 Transmit Request Status Flag		R
1	TMTRSTS1	CANi Transmit Buffer 1 Transmit Request Status Flag		R
0	TMTRSTS0	CANi Transmit Buffer 0 Transmit Request Status Flag		R

- TMTRSTSp Flags (p = 0 to 3)
  These flags indicate the status of the TMTR bit in the TMCp register.
  When the TMTR bit is set to 1 (transmission is requested), the corresponding TMTRSTSp flag is set to 1.
  The corresponding TMTRSTSp flag is cleared to 0 when the TMTR bit is set to 0 (transmission is not requested) or in channel reset mode.

18.3.64 CANi Transmit Buffer Transmit Complete Status Register (TMTCSTS) (i = 0)

Address TMTCSTSL: F0376H, TMTCSTSH: F0377H

	b15	b14	b13	b12	b11	b10	b9	b8	b7	b6	b5	b4	b3	b2	b1	b0
	—	—	—	—	—	—	—	—	—	—	—	—	TMTCSTS3	TMTCSTS2	TMTCSTS1	TMTCSTS0
After Reset	0	0	0	0	0	0	0	0	0	0	0	0	0	0	0	0

Bit	Symbol	Bit Name	Description	R/W
15 to 4	—	Reserved	These bits are always read as 0.	R
3	TMTCSTS3	CANi Transmit Buffer 3 Transmit Complete Status Flag	0: Transmission has not been completed. 1: Transmission has been completed	R
2	TMTCSTS2	CANi Transmit Buffer 2 Transmit Complete Status Flag		R
1	TMTCSTS1	CANi Transmit Buffer 1 Transmit Complete Status Flag		R
0	TMTCSTS0	CANi Transmit Buffer 0 Transmit Complete Status Flag		R

- TMTCSTSp Flags (p = 0 to 3)
  When the TMTRF[1:0] flag in the TMSTSp register is set to B'10 (transmission has been completed (without transmit abort request)) or B'11 (transmission has been completed (with transmit abort request)), the corresponding TMTCSTSp flag is set to 1.
  These flags are cleared to 0 when the corresponding TMTRF [1:0] flag is set to B'00 or in channel reset mode.

18.3.65 CANi Transmit Buffer Transmit Abort Status Register (TMTASTS) (i = 0)

Address TMTASTSL: F0378H, TMTASTSH: F0379H

	b15	b14	b13	b12	b11	b10	b9	b8	b7	b6	b5	b4	b3	b2	b1	b0
	—	—	—	—	—	—	—	—	—	—	—	—	TMTA STS3	TMTA STS2	TMTA STS1	TMTA STS0
After Reset	0	0	0	0	0	0	0	0	0	0	0	0	0	0	0	0

Bit	Symbol	Bit Name	Description	R/W
15 to 4	—	Reserved	These bits are always read as 0.	R
3	TMTASTS3	CANi Transmit Buffer 3 Transmit Abort Status Flag	0: Transmission is not aborted. 1: Transmission is aborted.	R
2	TMTASTS2	CANi Transmit Buffer 2 Transmit Abort Status Flag		R
1	TMTASTS1	CANi Transmit Buffer 1 Transmit Abort Status Flag		R
0	TMTASTS0	CANi Transmit Buffer 0 Transmit Abort Status Flag		R

- TMTASTSp Flags (p = 0 to 3)
  When the TMTRF[1:0] flag in the TMSTSp register is set to B'01 (transmit abort has been completed), the corresponding TMTASTSp flag is set to 1.
  These flags are cleared to 0 when the corresponding TMTRF[1:0] flag is set to B'00 or in channel reset mode.

18.3.66 CANi Transmit Buffer Interrupt Enable Register (TMIEC) (i = 0)

Address TMIECL: F037AH, TMIECH: F037BH

	b15	b14	b13	b12	b11	b10	b9	b8	b7	b6	b5	b4	b3	b2	b1	b0
	—	—	—	—	—	—	—	—	—	—	—	—	TMIE3	TMIE2	TMIE1	TMIE0
After Reset	0	0	0	0	0	0	0	0	0	0	0	0	0	0	0	0

Bit	Symbol	Bit Name	Description	R/W
15 to 4	—	Reserved	These bits are always read as 0. The write value should always be 0.	R
3	TMIE3	CANi Transmit Buffer 3 Interrupt Enable	0: Transmit buffer interrupt is disabled. 1: Transmit buffer interrupt is enabled.	R/W
2	TMIE2	CANi Transmit Buffer 2 Interrupt Enable		R/W
1	TMIE1	CANi Transmit Buffer 1 Interrupt Enable		R/W
0	TMIE0	CANi Transmit Buffer 0 Interrupt Enable		R/W

- TMIEp Bits (p = 0 to 3)
  When any of these bits is set to 1 and the corresponding transmission has been completed, a transmit buffer interrupt request is generated.
  Modify these bits when the TMTRM flag in the corresponding TMSTSp register is 0 (no transmit request is present).
  Write 0 to bits corresponding to transmit buffers linked to transmit/receive FIFO buffers.

18.3.67 CANi Transmit Buffer Register pAL (TMIDLp) (i = 0) (p = 0 to 3)

Address TMIDL0L: F0600H, TMIDL0H: F0601H TMIDL1L: F0610H, TMIDL1H: F0611H
TMIDL2L: F0620H, TMIDL2H: F0621H TMIDL3L: F0630H, TMIDL3H: F0631H

	b15	b14	b13	b12	b11	b10	b9	b8	b7	b6	b5	b4	b3	b2	b1	b0
	TMID[15:0]															
After Reset	0	0	0	0	0	0	0	0	0	0	0	0	0	0	0	0

Bit	Symbol	Bit Name	Description	R/W
15 to 0	TMID[15:0]	Transmit Buffer ID Data L	Set standard ID or extended ID. For standard ID, write an ID to bits 10 to 0 and write 0 to bits 15 to 11.	R/W

Modify this register when the TMTRM bit in the corresponding TMSTSp register is set to 0 (no transmit request is present). If this register is linked to any transmit/receive FIFO buffer, do not write data to this register.

This register can be read/written when the RPAGE bit in the GRWCR register is 1.

- TMID[15:0] Bits
  These bits are used to set the ID of the message to be transmitted from the transmit buffer.

18.3.68 CANi Transmit Buffer Register pAH (TMIDHp) (i = 0) (p = 0 to 3)

Address TMIDH0L: F0602H, TMIDH0H: F0603H TMIDH1L: F0612H, TMIDH1H: F0613H
TMIDH2L: F0622H, TMIDH2H: F0623H TMIDH3L: F0632H, TMIDH3H: F0633H

	b15	b14	b13	b12	b11	b10	b9	b8	b7	b6	b5	b4	b3	b2	b1	b0
	TMIDE	TMRTR	THLEN	TMID[28:16]												
After Reset	0	0	0	0	0	0	0	0	0	0	0	0	0	0	0	0

Bit	Symbol	Bit Name	Description	R/W
15	TMIDE	Transmit Buffer IDE	0: Standard ID 1: Extended ID	R/W
14	TMRTR	Transmit Buffer RTR	0: Data frame 1: Remote frame	R/W
13	THLEN	Transmit History Data Store Enable	0: Transmit history data is not stored in the buffer. 1: Transmit history data is stored in the buffer.	R/W
12 to 0	TMID[28:16]	Transmit Buffer ID Data H	Set standard ID or extended ID. For standard ID, write 0 to these bits.	R/W

Modify this register when the TMTRM bit in the corresponding TMSTSp register is set to 0 (no transmit request is present). If this register is linked to any transmit/receive FIFO buffer, do not write data to this register.

This register can be read/written when the RPAGE bit in the GRWCR register is 1.

- TMIDE Bit
  This bit is used to set the ID format of the message to be transmitted from the transmit buffer.

- TMRTR Bit
  This bit is used to set the data format of the message to be transmitted from the transmit buffer.

- THLEN Bit
  When this bit is set to 1, the transmit history data (label information, buffer number, and buffer type) of transmit messages is stored in the transmit history buffer after transmission is completed.

- TMID[28:16] Bits
  These bits are used to set the ID of the message to be transmitted from the transmit buffer.

18.3.69 CANi Transmit Buffer Register pBH (TMPTRp) (i = 0) (p = 0 to 3)

Address TMPTR0L: F0606H, TMPTR0H: F0607H TMPTR1L: F0616H, TMPTR1H: F0617H
TMPTR2L: F0626H, TMPTR2H: F0627H TMPTR3L: F0636H, TMPTR3H: F0637H

	b15	b14	b13	b12	b11	b10	b9	b8	b7	b6	b5	b4	b3	b2	b1	b0
	TMDLC[3:0]				—	—	—	—	TMPTR[7:0]							
After Reset	0	0	0	0	0	0	0	0	0	0	0	0	0	0	0	0

Bit	Symbol	Bit Name	Description	R/W
15 to 12	TMDLC[3:0]	Transmit Buffer DLC Data	b15 b14 b13 b12 0 0 0 0 : 0 data bytes 0 0 0 1 : 1 data byte 0 0 1 0 : 2 data bytes 0 0 1 1 : 3 data bytes 0 1 0 0 : 4 data bytes 0 1 0 1 : 5 data bytes 0 1 1 0 : 6 data bytes 0 1 1 1 : 7 data bytes 1 X X X : 8 data bytes	R/W
11 to 8	—	Reserved	These bits are always read as 0. The write value should always be 0.	R
7 to 0	TMPTR[7:0]	Transmit Buffer Label Data	Set the label information to be stored in the transmit history buffer.	R/W

Modify this register when the TMTRM bit in the corresponding TMSTSp register is set to 0 (no transmit request is present). If this register is linked to any transmit/receive FIFO buffer, do not write data to this register.

This register can be read/written when the RPAGE bit in the GRWCR register is 1.

- TMDLC[3:0] Bits
  These bits are used to set the data length of the message to be transmitted from the transmit buffer when the TMRTR bit in the TMIDHp register is set to 0 (data frame). If a 9-byte (or more) data length is set, 8 bytes of data is actually transmitted.
  When the TMRTR bit is set to 1 (remote frame), set the data length of messages to be requested.

- TMPTR[7:0] Bits
  When message transmission has been completed, the TMPTR[7:0] value is stored in the transmit history buffer.

18.3.70 CANi Transmit Buffer Register pCL (TMDF0p) (i = 0) (p = 0 to 3)

Address TMDF00L: F0608H, TMDF00H: F0609H TMDF01L: F0618H, TMDF01H: F0619H
TMDF02L: F0628H, TMDF02H: F0629H TMDF03L: F0638H, TMDF03H: F0639H

	b15	b14	b13	b12	b11	b10	b9	b8	b7	b6	b5	b4	b3	b2	b1	b0
	TMDB1[7:0]								TMDB0[7:0]							
After Reset	0	0	0	0	0	0	0	0	0	0	0	0	0	0	0	0

Bit	Symbol	Bit Name	Description	R/W
15 to 8	TMDB1[7:0]	Transmit Buffer Data Byte 1	Set transmit buffer data.	R/W
7 to 0	TMDB0[7:0]	Transmit Buffer Data Byte 0		R/W

Modify this register when the TMTRM bit in the corresponding TMSTSp register is set to 0 (no transmit request is present). If this register is linked to any transmit/receive FIFO buffer, do not write data to this register.

This register can be read/written when the RPAGE bit in the GRWCR register is 1.

18.3.71 CANi Transmit Buffer Register pCH (TMDF1p) (i = 0) (p = 0 to 3)

Address TMDF10L: F060AH, TMDF10H: F060BH TMDF11L: F061AH, TMDF11H: F061BH
TMDF12L: F062AH, TMDF12H: F062BH TMDF13L: F063AH, TMDF13H: F063BH

	b15	b14	b13	b12	b11	b10	b9	b8	b7	b6	b5	b4	b3	b2	b1	b0
	TMDB3[7:0]								TMDB2[7:0]							
After Reset	0	0	0	0	0	0	0	0	0	0	0	0	0	0	0	0

Bit	Symbol	Bit Name	Description	R/W
15 to 8	TMDB3[7:0]	Transmit Buffer Data Byte 3	Set transmit buffer data.	R/W
7 to 0	TMDB2[7:0]	Transmit Buffer Data Byte 2		R/W

Modify this register when the TMTRM bit in the corresponding TMSTSp register is set to 0 (no transmit request is present). If this register is linked to any transmit/receive FIFO buffer, do not write data to this register.

This register can be read/written when the RPAGE bit in the GRWCR register is 1.

18.3.72 CANi Transmit Buffer Register pDL (TMDF2p) (i = 0) (p = 0 to 3)

Address TMDF20L: F060CH, TMDF20H: F060DH TMDF21L: F061CH, TMDF21H: F061DH
TMDF22L: F062CH, TMDF22H: F062DH TMDF23L: F063CH, TMDF23H: F063DH

	b15	b14	b13	b12	b11	b10	b9	b8	b7	b6	b5	b4	b3	b2	b1	b0
	TMDB5[7:0]								TMDB4[7:0]							
After Reset	0	0	0	0	0	0	0	0	0	0	0	0	0	0	0	0

Bit	Symbol	Bit Name	Description	R/W
15 to 8	TMDB5[7:0]	Transmit Buffer Data Byte 5	Set transmit buffer data.	R/W
7 to 0	TMDB4[7:0]	Transmit Buffer Data Byte 4		R/W

Modify this register when the TMTRM bit in the corresponding TMSTSp register is set to 0 (no transmit request is present). If this register is linked to any transmit/receive FIFO buffer, do not write data to this register.

This register can be read/written when the RPAGE bit in the GRWCR register is 1.

18.3.73 CANi Transmit Buffer Register pDH (TMDF3p) (i = 0) (p = 0 to 3)

Address TMDF30L: F060EH, TMDF30H: F060FH TMDF31L: F061EH, TMDF31H: F061FH
TMDF32L: F062EH, TMDF32H: F062FH TMDF33L: F063EH, TMDF33H: F063FH

	b15	b14	b13	b12	b11	b10	b9	b8	b7	b6	b5	b4	b3	b2	b1	b0
	TMDB7[7:0]								TMDB6[7:0]							
After Reset	0	0	0	0	0	0	0	0	0	0	0	0	0	0	0	0

Bit	Symbol	Bit Name	Description	R/W
15 to 8	TMDB7[7:0]	Transmit Buffer Data Byte 7	Set transmit buffer data.	R/W
7 to 0	TMDB6[7:0]	Transmit Buffer Data Byte 6		R/W

Modify this register when the TMTRM bit in the corresponding TMSTSp register is set to 0 (no transmit request is present). If this register is linked to any transmit/receive FIFO buffer, do not write data to this register.

This register can be read/written when the RPAGE bit in the GRWCR register is 1.

18.3.74 CANi Transmit History Buffer Control Register (THLCCi) (i = 0)

Address THLCC0L: F037CH, THLCC0H: F037DH

	b15	b14	b13	b12	b11	b10	b9	b8	b7	b6	b5	b4	b3	b2	b1	b0
	—	—	—	—	—	THLDTE	THLIM	THLIE	—	—	—	—	—	—	—	THLE
After Reset	0	0	0	0	0	0	0	0	0	0	0	0	0	0	0	0

Bit	Symbol	Bit Name	Description	R/W
15 to 11	—	Reserved	These bits are always read as 0. The write value should always be 0.	R
10	THLDTE	Transmit History Target Buffer Select	0: Entry from transmit/receive FIFO buffers 1: Entry from transmit buffers, transmit/receive FIFO buffers	R/W
9	THLIM	Transmit History Interrupt Source Select	0: When 6 sets of data have been stored in the transmit history buffer 1: When a single set of transmit history data has been stored	R/W
8	THLIE	Transmit History Interrupt Enable	0: Transmit history interrupt is disabled. 1: Transmit history interrupt is enabled.	R/W
7 to 1	—	Reserved	These bits are always read as 0. The write value should always be 0.	R
0	THLE	Transmit History Buffer Enable	0: Transmit history buffer is not used. 1: Transmit history buffer is used.	R/W

- THLDTE Bit
  When this bit is set to 0, the transmit history data of messages transmitted from transmit/receive FIFO buffers is stored in the transmit history buffer. When this bit is set to 1, the transmit history data of messages transmitted from transmit buffers and transmit/receive FIFO buffers is stored in the transmit history buffer.
  Modify this bit only in channel reset mode.

- THLIM Bit
  This bit is used to select a transmit history interrupt source.
  Modify this bit only in channel reset mode.

- THLIE Bit
  When the THLIE bit is set to 1 and the source selected by the THLIM bit has occurred, a transmit history interrupt request is generated. Modify the THLIE bit with the THLE bit set to 0.

- THLE Bit
  Setting this bit to 1 makes the transmit history buffer available. When data transmission from the buffer selected by the THLDTE bit has been completed, the transmit history data of transmit messages is stored in the transmit history buffer.
  Modify this bit only in channel communication mode or channel halt mode.

18.3.75 CANi Transmit History Buffer Status Register (THLSTSi) (i = 0)

Address THLSTS0L: F0380H, THLSTS0H: F0381H

	b15	b14	b13	b12	b11	b10	b9	b8	b7	b6	b5	b4	b3	b2	b1	b0
	—	—	—	—	THLMC[3:0]				—	—	—	—	THLIF	THLELT	THLFLL	THLEMP
After Reset	0	0	0	0	0	0	0	0	0	0	0	0	0	0	0	1

Bit	Symbol	Bit Name	Description	R/W
15 to 12	—	Reserved	These bits are always read as 0. The write value should always be 0.	R
11 to 8	THLMC[3:0]	Transmit History Buffer Unread Data Counter	These bits indicate the number of unread data sets stored in the transmit history buffer.	R
7 to 4	—	Reserved	These bits are always read as 0. The write value should always be 0.	R
3	THLIF	Transmit History Interrupt Request Flag	0: No transmit history interrupt request is present. 1: A transmit history interrupt request is present.	R/(W)Note
2	THLELT	Transmit History Buffer Overflow Flag	0: Transmit history buffer overflow has not occurred. 1: Transmit history buffer overflow has occurred.	R/(W)Note
1	THLFLL	Transmit History Buffer Full Status Flag	0: Transmit history buffer is not full. 1: Transmit history buffer is full.	R
0	THLEMP	Transmit History Buffer Empty Status Flag	0: Transmit history buffer contains unread data. 1: Transmit history buffer contains no unread data (buffer empty).	R

Note The only effective value for writing to this flag bit is 0, which clears the bit. Otherwise writing to the bit results in retention of its state. To write 0 to this flag bit, write by using an 8-bit data transfer instruction or a 16-bit data transfer instruction.

<R> In case this bit is set to 1 by the CAN module and cleared to 0 by the CPU instruction at the same time, the setting by the CAN module is prioritized. For the details, refer to chapter "18.14 Notes on the CAN Module"

- THLMC[3:0] Bits
  These bits indicate the number of unread data sets stored in the transmit history buffer.

- THLIF Flag
  The THLIF flag is set to 1 when the interrupt source set by the THLIM bit in the THLCCi register has occurred. This flag is cleared to 0 in channel reset mode or by writing 0 to this flag by the program.

- THLELT Flag
  The THLELT flag is set to 1 when it is attempted to store new transmit history data while the transmit history buffer is full. In this case, the new data is discarded. This flag becomes 0 in channel reset mode or by writing 0 to this flag by the program.

- THLFLL Flag
  The THLFLL flag is set to 1 when 8 data sets have been stored in the transmit history buffer, and is cleared to 0 when the number of data sets stored in the transmit history buffer has decreased to less than 8. This bit is also cleared to 0 in channel reset mode or when the THLE bit in the THLCCi register is set to 0 (transmit history buffer is not used).

- THLEMP Flag
  The THLEMP flag is cleared to 0 when even a single set of transmit history data has been stored in the transmit history buffer.
  This flag is set to 1 when all the data in the transmit history buffer has been read. This flag is also set to 1 in channel reset mode or when the THLE bit in the THLCCi register is set to 0 (transmit history buffer is not used).

18.3.76 CANi Transmit History Buffer Access Register (THLACCi) (i = 0)

Address THLACC0L: F0680H, THLACC0H: F0681H

	b15	b14	b13	b12	b11	b10	b9	b8	b7	b6	b5	b4	b3	b2	b1	b0
	TID[7:0]								—	—	—	BN[1:0]		—	BT[1:0]	
After Reset	0	0	0	0	0	0	0	0	0	0	0	0	0	0	0	0

Bit	Symbol	Bit Name	Description	R/W
15 to 8	TID[7:0]	Label Data	The label information of stored data can be read.	R
7 to 5	—	Reserved	These bits are always read as 0.	R
4, 3	BN[1:0]	Buffer Number Data	The buffer number of transmit source (transmit buffer or transmit/receive FIFO) can be read.	R
2	—	Reserved	This bit is always read as 0.	R
1, 0	BT[1:0]	Buffer Type Data	b1 b0 0 1 : Transmit buffer 1 0 : Transmit FIFO buffer	R

This register can be read when the RPAGE bit in the GRWCR register is 1.

- TID [7:0] Bits
  These bits indicate the label information of transmit history data stored in the transmit history buffer.

- BN[1:0] Bits
  These bits indicate the transmit source buffer number of transmit history data stored in the transmit history buffer.

- BT[1:0] Bits
  These bits indicate the transmit source buffer type of transmit history data stored in the transmit history buffer.

18.3.77 CANi Transmit History Buffer Pointer Control Register (THLPCTRi) (i = 0)

Address THLPCTR0L: F0384H, THLPCTR0H: F0385H

	b15	b14	b13	b12	b11	b10	b9	b8	b7	b6	b5	b4	b3	b2	b1	b0
	—	—	—	—	—	—	—	—	THLPC[7:0]							
After Reset	0	0	0	0	0	0	0	0	0	0	0	0	0	0	0	0

Bit	Symbol	Bit Name	Description	R/W
15 to 8	—	Reserved	The write value should always be 0.	R
7 to 0	THLPC[7:0]	Transmit History Buffer Pointer	Writing H'FF to these bits moves the read pointer to the next unread data in the transmit history buffer.	W

- THLPC [7:0] Bits
  When the THLPC [7:0] bits are set to H'FF, the read pointer moves to the next data in the transmit history buffer. At this time, the THLMC[3:0] (transmit history buffer unread data counter) value in the THLSTSi register is decremented. After reading the THLACCi register, write H'FF to the THLPC [7:0] bits.
  Write H'FF to the THLPC[7:0] bits when the THLE bit in the THLCCi register is set to 1 (transmit history buffer is used) and the THLEMP flag in the THLSTSi register is 0.

18.3.78 CAN Global RAM Window Control Register (GRWCR)

Address GRWCRL: F038AH, GRWCRH: F038BH

	b15	b14	b13	b12	b11	b10	b9	b8	b7	b6	b5	b4	b3	b2	b1	b0
	—	—	—	—	—	—	—	—	—	—	—	—	—	—	—	RPAGE
After Reset	0	0	0	0	0	0	0	0	0	0	0	0	0	0	0	0

Bit	Symbol	Bit Name	Description	R/W
15 to 1	—	Reserved	The write value should always be 0.	R
0	RPAGE	RAM Window Select	0: Selects window 0 (receive rule entry registers, CAN RAM test registers) 1: Selects window 1 (receive buffer, receive FIFO buffer, transmit/receive FIFO buffer, transmit buffer, transmit history data access register)	R/W

- RPAGE Bit

  This bit is used to select a window for the switching of registers that are allocated to addresses from H'F03A0 to H'F0681.

  [Registers allocated when the RPAGE bit is set to 0 (window 0 selected)]
  - CAN receive rule entry registers: GAFLIDLj, GAFLIDHj, GAFLMLj, GAFLMHj, GAFLPLj, GAFLPHj
  - CAN RAM test registers: RPGACCr

  [Registers allocated when the RPAGE bit is set to 1 (window 1 selected)]
  - CAN receive buffer registers: RMIDLn, RMIDHn, RMTSn, RMPTRn, RMDF0n to RMDF3n
  - CAN receive FIFO access registers: RFIDLm, RFIDHm, RFTSm, RFPTRm, RFDF0m to RFDF3m
  - CANi transmit/receive FIFO access registers: CFIDLk, CFIDHk, CFTSk, CFPTRk, CFDF0k to CFDF3k
  - CANi transmit buffer registers: TMIDLp, TMIDHp, TMPTRp, TMDF0p to TMDF3p
  - CANi transmit history buffer access register: THLACCi

18.3.79 CAN Global Test Configuration Register (GTSTCFG)

Address GTSTCFGL: F038CH, GTSTCFGH: F038DH

	b15	B14	b13	b12	b11	b10	b9	b8	b7	b6	b5	b4	b3	b2	b1	b0
	—	—	—	—	—	RTMPS[2:0]			—	—	—	—	—	—	—	—
After Reset	0	0	0	0	0	0	0	0	0	0	0	0	0	0	0	0

Bit	Symbol	Bit Name	Description	R/W
15 to 11	—	Reserved	These bits are always read as 0. The write value should always be 0.	R
10 to 8	RTMPS[2:0]	RAM Test Page Configuration	Set a value within a range of page 0 (H'00) to page 2 (H'02).	R/W
7 to 0	—	Reserved	These bits are always read as 0. The write value should always be 0.	R

Modify the GTSTCFG register only in global test mode.

- RTMPS[2:0] Bits
  These bits are used to set the RAM test target page number for RAM test. Set a value from H'00 to H'02.

18.3.80 CAN Global Test Control Register (GTSTCTRL)

Address GTSTCTRL: F038EH

	b7	b6	b5	b4	b3	b2	b1	b0
	—	—	—	—	—	RTME	—	—
After Reset	0	0	0	0	0	0	0	0

Bit	Symbol	Bit Name	Description	R/W
7 to 3	—	Reserved	These bits are always read as 0. The write value should always be 0.	R
2	RTME	RAM Test Enable	0: RAM test is disabled. 1: RAM test is enabled.	R/W
1, 0	—	Reserved	These bits are always read as 0. The write value should always be 0.	R

- RTME Bit

  Setting this bit to 1 enables RAM test. Modify this bit only in global test mode.

  (1) Set the GMDC[1:0] bits in the GCTRL register to B'10 (global test mode).

  (2) Release protection by successively writing H'7575 and H'8A8A to the GLOCKK register.

  (3) Set the RTME bit to 1.

  (4) Check that the RTME bit is set to 1.

18.3.81 CAN Global Test Protection Unlock Register (GLOCKK)

Address GLOCKK: F0394H

	b15	b14	b13	b12	b11	b10	b9	b8	b7	b6	b5	b4	b3	b2	b1	b0
	LOCK[15:0]															
After Reset	0	0	0	0	0	0	0	0	0	0	0	0	0	0	0	0

Bit	Symbol	Bit Name	Description	R/W
15 to 0	LOCK[15:0]	Protection Unlock Data	Write protection unlock data to use test functions. These bits are always read as 0.	W

Modify the GLOCKK register only in global test mode.

- LOCK[15:0] Bits
  Write the protection unlock data shown in Table 18-4 to the LOCK[15:0] bits in succession to allow writing 1 to the target bit.

Table 18-4. Protection Unlock Data for Test Functions

Test Function	Protection Unlock Data 1	Protection Unlock Data 2	Target Bit
RAM test	H'7575	H'8A8A	RTME bit in the GTSTCTRL register

Writing data to the CAN's SFR area (H'F0300 to H'F039F) except the RAM area after protection is unlocked enables protection again.

Protection is not enabled even by reading data from the CAN's SFR area or reading/writing data from/to other areas.

18.3.82 CAN RAM Test Register r (RPGACCr) (r = 0 to 127)

Address	RPGACC0L: F0580H, RPGACC0H: F0581H	RPGACC1L: F0582H, RPGACC1H: F0583H	RPGACC2L: F0584H, RPGACC2H: F0585H
	RPGACC3L: F0586H, RPGACC3H: F0587H	RPGACC4L: F0588H, RPGACC4H: F0589H	RPGACC5L: F058AH, RPGACC5H: F058BH
	RPGACC6L: F058CH, RPGACC6H: F058DH	RPGACC7L: F058EH, RPGACC7H: F058FH	RPGACC8L: F0590H, RPGACC8H: F0591H
	RPGACC9L: F0592H, RPGACC9H: F0593H	RPGACC10L: F0594H, RPGACC10H: F0595H	RPGACC11L: F0596H, RPGACC11H: F0597H
	RPGACC12L: F0598H, RPGACC12H: F0599H	RPGACC13L: F059AH, RPGACC13H: F059BH	RPGACC14L: F059CH, RPGACC14H: F059DH
	RPGACC15L: F059EH, RPGACC15H: F059FH	RPGACC16L: F05A0H, RPGACC16H: F05A1H	RPGACC17L: F05A2H, RPGACC17H: F05A3H
	RPGACC18L: F05A4H, RPGACC18H: F05A5H	RPGACC19L: F05A6H, RPGACC19H: F05A7H	RPGACC20L: F05A8H, RPGACC20H: F05A9H
	RPGACC21L: F05AAH, RPGACC21H: F05ABH	RPGACC22L: F05ACH, RPGACC22H: F05ADH	RPGACC23L: F05AEH, RPGACC23H: F05AFH
	RPGACC24L: F05B0H, RPGACC24H: F05B1H	RPGACC25L: F05B2H, RPGACC25H: F05B3H	RPGACC26L: F05B4H, RPGACC26H: F05B5H
	RPGACC27L: F05B6H, RPGACC27H: F05B7H	RPGACC28L: F05B8H, RPGACC28H: F05B9H	RPGACC29L: F05BAH, RPGACC29H: F05BBH
	RPGACC30L: F05BCH, RPGACC30H: F05BDH	RPGACC31L: F05BEH, RPGACC31H: F05BFH	RPGACC32L: F05C0H, RPGACC32H: F05C1H
	RPGACC33L: F05C2H, RPGACC33H: F05C3H	RPGACC34L: F05C4H, RPGACC34H: F05C5H	RPGACC35L: F05C6H, RPGACC35H: F05C7H
	RPGACC36L: F05C8H, RPGACC36H: F05C9H	RPGACC37L: F05CAH, RPGACC37H: F05CBH	RPGACC38L: F05CCH, RPGACC38H: F05CDH
	RPGACC39L: F05CEH, RPGACC39H: F05CFH	RPGACC40L: F05D0H, RPGACC40H: F05D1H	RPGACC41L: F05D2H, RPGACC41H: F05D3H
<R>	RPGACC42L: F05D4H, RPGACC42H: F05D5H	RPGACC43L: F05D6H, RPGACC43H: F05D7H	RPGACC44L: F05D8H, RPGACC44H: F05D9H
	RPGACC45L: F05DAH, RPGACC45H: F05DBH	RPGACC46L: F05DCH, RPGACC46H: F05DDH	RPGACC47L: F05DEH, RPGACC47H: F05DFH
	RPGACC48L: F05E0H, RPGACC48H: F05E1H	RPGACC49L: F05E2H, RPGACC49H: F05E3H	RPGACC50L: F05E4H, RPGACC50H: F05E5H
	RPGACC51L: F05E6H, RPGACC51H: F05E7H	RPGACC52L: F05E8H, RPGACC52H: F05E9H	RPGACC53L: F05EAH, RPGACC53H: F05EBH
	RPGACC54L: F05ECH, RPGACC54H: F05EDH	RPGACC55L: F05EEH, RPGACC55H: F05EFH	RPGACC56L: F05F0H, RPGACC56H: F05F1H
	RPGACC57L: F05F2H, RPGACC57H: F05F3H	RPGACC58L: F05F4H, RPGACC58H: F05F5H	RPGACC59L: F05F6H, RPGACC59H: F05F7H
	RPGACC60L: F05F8H, RPGACC60H: F05F9H	RPGACC61L: F05FAH, RPGACC61H: F05FBH	RPGACC62L: F05FCH, RPGACC62H: F05FDH
	RPGACC63L: F05FEH, RPGACC63H: F05FFH	RPGACC64L: F0600H, RPGACC64H: F0601H	RPGACC65L: F0602H, RPGACC65H: F0603H
	RPGACC66L: F0604H, RPGACC66H: F0605H	RPGACC67L: F0606H, RPGACC67H: F0607H	RPGACC68L: F0608H, RPGACC68H: F0609H
	RPGACC69L: F060AH, RPGACC69H: F060BH	RPGACC70L: F060CH, RPGACC70H: F060DH	RPGACC71L: F060EH, RPGACC71H: F060FH
	RPGACC72L: F0610H, RPGACC72H: F0611H	RPGACC73L: F0612H, RPGACC73H: F0613H	RPGACC74L: F0614H, RPGACC74H: F0615H
	RPGACC75L: F0616H, RPGACC75H: F0617H	RPGACC76L: F0618H, RPGACC76H: F0619H	RPGACC77L: F061AH, RPGACC77H: F061BH
	RPGACC78L: F061CH, RPGACC78H: F061DH	RPGACC79L: F061EH, RPGACC79H: F061FH	RPGACC80L: F0620H, RPGACC80H: F0621H
	RPGACC81L: F0622H, RPGACC81H: F0623H	RPGACC82L: F0624H, RPGACC82H: F0625H	RPGACC83L: F0626H, RPGACC83H: F0627H
	RPGACC84L: F0628H, RPGACC84H: F0629H	RPGACC85L: F062AH, RPGACC85H: F062BH	RPGACC86L: F062CH, RPGACC86H: F062DH
	RPGACC87L: F062EH, RPGACC87H: F062FH	RPGACC88L: F0630H, RPGACC88H: F0631H	RPGACC89L: F0632H, RPGACC89H: F0633H
	RPGACC90L: F0634H, RPGACC90H: F0635H	RPGACC91L: F0636H, RPGACC91H: F0637H	RPGACC92L: F0638H, RPGACC92H: F0639H
	RPGACC93L: F063AH, RPGACC93H: F063BH	RPGACC94L: F063CH, RPGACC94H: F063DH	RPGACC95L: F063EH, RPGACC95H: F063FH
	RPGACC96L: F0640H, RPGACC96H: F0641H	RPGACC97L: F0642H, RPGACC97H: F0643H	RPGACC98L: F0644H, RPGACC98H: F0645H
	RPGACC99L: F0646H, RPGACC99H: F0647H	RPGACC100L: F0648H, RPGACC100H: F0649H	RPGACC101L: F064AH, RPGACC101H: F064BH
	RPGACC102L: F064CH, RPGACC102H: F064DH	RPGACC103L: F064EH, RPGACC103H: F064FH	RPGACC104L: F0650H, RPGACC104H: F0651H
	RPGACC105L: F0652H, RPGACC105H: F0653H	RPGACC106L: F0654H, RPGACC106H: F0655H	RPGACC107L: F0656H, RPGACC107H: F0657H
	RPGACC108L: F0658H, RPGACC108H: F0659H	RPGACC109L: F065AH, RPGACC109H: F065BH	RPGACC110L: F065CH, RPGACC110H: F065DH
	RPGACC111L: F065EH, RPGACC111H: F065FH	RPGACC112L: F0660H, RPGACC112H: F0661H	RPGACC113L: F0662H, RPGACC113H: F0663H
	RPGACC114L: F0664H, RPGACC114H: F0665H	RPGACC115L: F0666H, RPGACC115H: F0667H	RPGACC116L: F0668H, RPGACC116H: F0669H
	RPGACC117L: F066AH, RPGACC117H: F066BH	RPGACC118L: F066CH, RPGACC118H: F066DH	RPGACC119L: F066EH, RPGACC119H: F066FH
	RPGACC120L: F0670H, RPGACC120H: F0671H	RPGACC121L: F0672H, RPGACC121H: F0673H	RPGACC122L: F0674H, RPGACC122H: F0675H
	RPGACC123L: F0676H, RPGACC123H: F0677H	RPGACC124L: F0678H, RPGACC124H: F0679H	RPGACC125L: F067AH, RPGACC125H: F067BH
	RPGACC126L: F067CH, RPGACC126H: F067DH	RPGACC127L: F067EH, RPGACC127H: F067FH	

	b15	b14	b13	b12	b11	b10	b9	b8	b7	b6	b5	b4	b3	b2	b1	b0
	RDTA[15:0]															
After Reset	0	0	0	0	0	0	0	0	0	0	0	0	0	0	0	0

Description	R/W
Data can be read and written in CAN RAM.	R/W

Modify the RPGACCr register in global test mode with the RTME bit in the GTSTCTRL register set to 1 (RAM test is enabled). The RPGACCr register is readable and writable when the RTME bit is set to 1.

This register can be read/written when the RPAGE bit in the GRWCR register is 0.

18.4 CAN Modes

The CAN module has four global modes to control entire CAN module status and four channel modes to control individual channel status. Details of global modes are described in 18.4.1, and details of channel modes are described in 18.4.2.

- Global stop mode : Stops clocks of entire module to achieve low power consumption.
- Global reset mode : Performs initial settings for entire module.
- Global test mode : Performs test settings and performs RAM test.
- Global operating mode : Makes entire module operable.
- Channel stop mode : Stops channel clock.
- Channel reset mode : Performs initial settings for channels.
- Channel halt mode : Stops CAN communication and enables channel test.
- Channel communication mode : Performs CAN communication.

18.4.1 Global Modes

Figure 18-2 shows the transitions of global modes.

Figure 18-2. Transitions of Global Modes

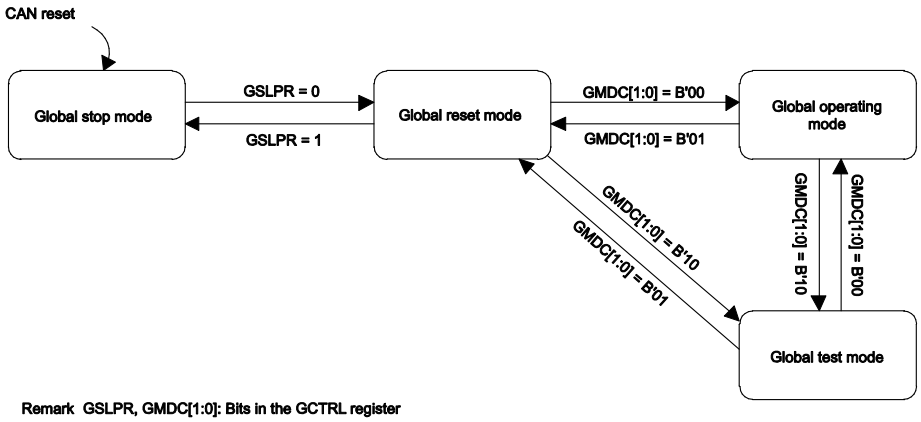

Remark GSLPR, GMDC[1:0]: Bits in the GCTRL register

Channel modes transition in some cases with transitions of global modes. Table 18-5 shows the transitions of channel modes depending on the global mode setting by the GMDC[1:0] bits and the GSLPR bit.

Table 18-5. Transitions of Channel Modes Depending on Global Mode Setting (GMDC[1:0] and GSLPR Bits)

Channel Mode before Setting	Channel Mode after Setting[Note]			
	GMDC[1:0] = B'00 GSLPR = 0 (Global Operation)	GMDC[1:0] = B'10 GSLPR = 0 (Global Test)	GMDC[1:0] = B'01 GSLPR = 0 (Global Reset)	GMDC[1:0] = B'01 GSLPR = 1 (Global Stop)
Channel communication	Channel communication	Channel halt	Channel reset	Transition prohibited
Channel halt	Channel halt	Channel halt	Channel reset	Transition prohibited
Channel reset	Channel reset	Channel reset	Channel reset	Channel stop
Channel stop	Channel stop	Channel stop	Channel stop	Channel stop

Note GMDC[1:0], GSLPR: Bits in the GCTRL register.

Table 18-6 shows the global mode transition time.

Table 18-6. Global Mode Transition Time

Mode before Transition	Mode after Transition	Maximum Transition Time
Global stop	Global reset	3 f_{CLK} cycles
Global reset	Global stop	3 f_{CLK} cycles
Global reset	Global test	10 f_{CLK} cycles
Global reset	Global operating	10 f_{CLK} cycles
Global test	Global reset	3 f_{CLK} cycles
Global test	Global operating	3 f_{CLK} cycles
Global operating	Global reset	3 f_{CLK} cycles
Global operating	Global test	Two CAN frames

(1) Global Stop Mode

In global stop mode, clocks of the CAN do not run and therefore power consumption is reduced. CAN registers can be read, but writing data to them is prohibited. Register values are retained.

After the operation of the CAN module is enabled, the CAN module transitions to global stop mode. Setting the GSLPR bit in the GCTRL register to 1 (in global stop mode) in global reset mode sets the CSLPR bit in each of the CiCTRL register to 1 (channel stop mode). If all channels are forcibly caused to transition to channel stop mode, the CAN module transitions to global stop mode. The GSLPR bit should not be modified in global operating mode and global test mode.

(2) Global Reset Mode

In global reset mode, CAN module settings are performed. When the CAN module transitions to global reset mode, some registers are initialized. Table 18-9 and Table 18-10 list the registers to be initialized.

Setting the GMDC[1:0] bits in the GCTRL register to B'01 sets the CHMDC[1:0] bits in each of the CiCTRL register to B'01 (channel reset mode). If all channels are forcibly caused to transition to channel reset mode, the CAN module transitions to global reset mode. Channels that are already in channel reset mode or channel stop mode do not transition (because the CHMDC[1:0] bits have already been set to B'01).

(3) Global Test Mode

In global test mode, settings for test-related registers are performed. When the CAN module transitions to global test mode, all CAN communications are disabled.

Setting the GMDC[1:0] bits in the GCTRL register to B'10 sets the CHMDC[1:0] bits in each of the CiCTRL register to B'10 (channel halt mode). If all channels are forcibly caused to transition to channel halt mode, the CAN module transitions to global test mode. Channels that are in channel stop mode, channel reset mode, or channel halt mode do not transition.

(4) Global Operating Mode

In global operating mode, entire CAN module operates.

When the GMDC[1:0] bits in the GCTRL register are set to B'00, the CAN module transitions to global operating mode.

18.4.2 Channel Modes

Figure 18-3 shows a channel mode state transition chart (i = 0). Table 18-7 shows the channel mode transition time (i = 0).

Figure 18-3. Channel Mode State Transition Chart (i = 0)

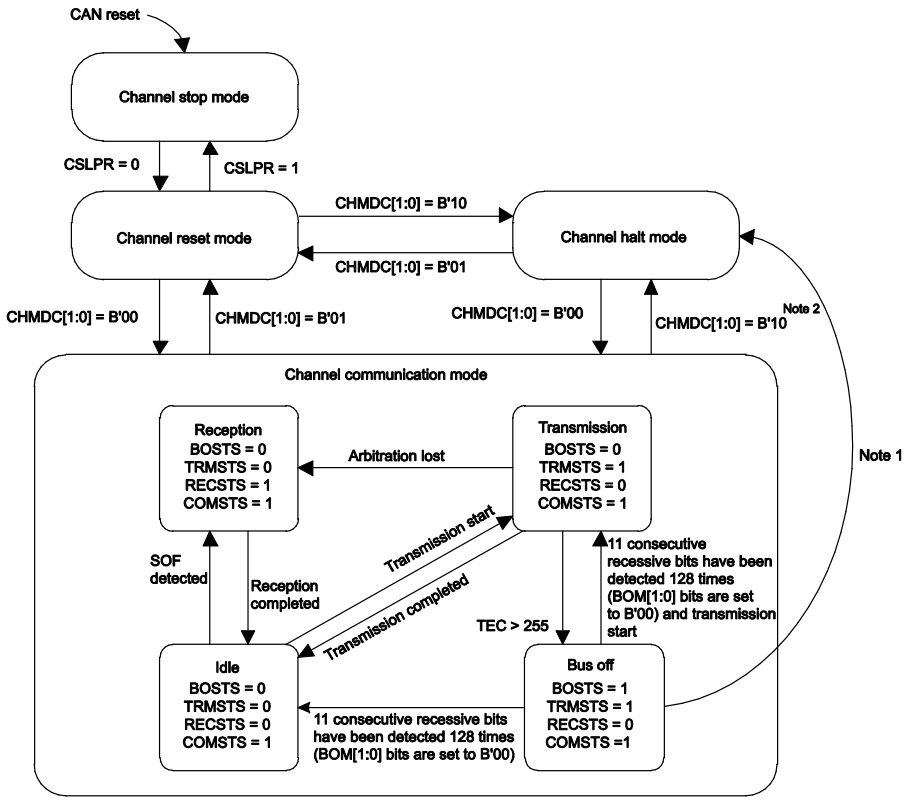

Notes1. Timing of transition from bus off state to channel halt mode
When BOM[1:0] = B'01: Transition to channel halt mode when TEC exceeds 255
When BOM[1:0] = B'10: Transition to channel halt mode when 11 consecutive recessive bits have been detected 128 times
When BOM[1:0] = B'11: Transition to channel halt mode when the CHMDC[1:0] bits are set to B'10
2. While the CAN bus is locked at the dominant level, transition to channel halt mode is not made. In that case, enter channel reset mode.

Remark CHMDC[1:0], CSLPR: Bits in the CiCTRL register (i = 0)
BOM[1:0]: Bits in the CiCTRH register (i = 0)
BOSTS, TRMSTS, RECSTS, COMSTS: Bits in the CiSTSL register (i = 0)

Table 18-7. Channel Mode Transition Time (i = 0)

Mode before Transition	Mode after Transition	Maximum Transition Time
Channel stop	Channel reset	3 f_{CLK} cycles
Channel reset	Channel stop	3 f_{CLK} cycles
Channel reset	Channel halt	3 CANi bit times
Channel reset	Channel communication	2 CANi bit times
Channel halt	Channel reset	3 f_{CLK} cycles
Channel halt	Channel communication	3 CANi bit times
Channel communication	Channel reset	3 f_{CLK} cycles
Channel communication	Channel halt	2 CANi frames

(1) Channel Stop Mode

In channel stop mode, clocks are not supplied to channels and therefore power consumption is reduced. CAN registers can be read, but writing data to them is prohibited. Register values are retained.

Each channel enters channel stop mode after the operation of the CAN module is enabled. The channel transitions to channel stop mode when the CSLPR bit in the CiCTRL register is set to 1 (channel stop mode) in channel reset mode. The CSLPR bit should not be modified in channel communication mode and channel halt mode.

(2) Channel Reset Mode

In channel reset mode, channel settings are performed. When a channel transitions to channel reset mode, some channel-related registers are initialized. Table 18-9 lists the registers to be initialized.

When the CHMDC[1:0] bits in the CiCTRL register are set to B'01 (channel reset mode) during CAN communication, communication is terminated before it is completed and the channel transitions to channel reset mode. Table 18-8 shows the operation when the CHMDC[1:0] bits are set to B'01 (channel reset mode) during CAN communication.

(3) Channel Halt Mode

In channel halt mode, settings for test-related registers of channels are performed. When a channel transitions to channel halt mode, CAN communication of the channel stops.

Table 18-8 shows operation when the CHMDC[1:0] bits are set to B'10 (channel halt mode) during CAN communication.

Table 18-8. Operation when a Channel Transitions to Channel Reset Mode/Channel Halt Mode

Mode	During Reception	During Transmission	Bus Off State
Channel reset (CHMDC[1:0] = B'01)	Transitions to channel reset mode before reception is completed. Note 1	Transitions to channel reset mode before transmission is completed. Note 1	Transitions to channel reset mode before bus off recovery.
Channel halt Note 3 (CHMDC[1:0] = B'10)	Transitions to channel halt mode after reception is completed. Note 2	Transitions to channel halt mode after transmission is completed. Note 2	[When BOM[1:0] = B'00] Transitions to channel halt mode (CHMDC[1:0] = B'10) only after bus off recovery. [When BOM[1:0] = B'01] Transitions to channel halt mode automatically when the condition for transition to bus off state is met. [When BOM[1:0] = B'10] Transitions to channel halt mode automatically after bus off recovery. [When BOM[1:0] = B'11] Transitions to channel halt mode immediately after the CHMDC[1:0] bits are set to B'10 before bus off recovery.

Notes 1. To allow transition to channel reset mode after communication is completed, set the CHMDC[1:0] bits to B'10 and confirm that communication has been completed and transition to channel halt mode has been made, and then set the CHMDC[1:0] bits to B'01.

2. While the CAN bus is locked at the dominant level, transition to channel halt mode is not made. In that case, enter channel reset mode. The CAN bus status can be confirmed with the BLF flag of the CiERFLL register that becomes 1 when dominant lock is detected.

3. In case of a transition from channel reset mode to channel halt mode, transition to channel halt mode after setting the CiCFGL and CiCFGH registers in channel reset mode.

(4) Channel Communication Mode

In channel communication mode, CAN communication is performed. Each channel has the following communication states during CAN communication.

- Idle : Neither reception nor transmission is in progress.
- Reception : Receiving a message sent from another node.
- Transmission : Transmitting a message.
- Bus off : Isolated from CAN communication.

When the CHMDC[1:0] bits in the CiCTRL register are set to B'00, the channel transitions to channel communication mode. After that, when 11 consecutive recessive bits have been detected, the COMSTS flag in the CiSTSL register is set to 1 (communication is ready) and transmission and reception are enabled on the CAN network as an active node. At this time, transmission and reception of messages can be started.

(5) Bus Off State

A channel transitions to the bus off state according to the transmit/receive error counter increment/decrement rules of the CAN specifications.

How to return from the bus off state is set by the BOM[1:0] bits in the CiCTRH register.

- When BOM[1:0] = B'00:
  Bus off recovery is compliant with the CAN specifications. After 11 consecutive recessive bits have been detected 128 times, a channel returns from the bus off state to the CAN communication ready state (error active state). At that time, the TEC[7:0] and REC[7:0] bits in the CiSTSH register are initialized to H'00 and the BORF flag in the CiERFLL register is set to 1 (bus off recovery is detected). When the CHMDC[1:0] bits in the CiCTRL register are set to B'10 (channel halt mode) in the bus off state, the channel transitions to channel halt mode after bus off recovery has been completed (11 consecutive recessive bits have been detected 128 times).
- When BOM[1:0] = B'01:
  When a channel transitions to the bus off state, the CHMDC[1:0] bits are set to B'10 and the channel transitions to channel halt mode. At that time, the TEC[7:0] and REC[7:0] bits are initialized to H'00 but the BORF flag is not set to 1.
- When BOM[1:0] = B'10:
  When a channel has transitioned to the bus off state, the CHMDC[1:0] bits are set to B'10. After bus off recovery has been completed (11 consecutive recessive bits have been detected 128 times), the channel transitions to channel halt mode. At that time, the TEC[7:0] and REC[7:0] bits are initialized to H'00 and the BORF flag is set to 1.
- When BOM[1:0] = B'11:
  When the CHMDC[1:0] bits are set to B'10 in the bus off state, the channel transitions to channel halt mode before bus off recovery is completed. At that time, the TEC[7:0] and REC[7:0] bits are initialized to H'00 but the BORF flag is not set to 1.
  However, the BORF flag becomes 1 if a CAN module transitions to error active state (by detecting 128 times of 11 consecutive recessive bits) before CHMDC[1:0] bits are set to B'10.

If the channel transitions to channel halt mode simultaneously when the program writes a value to the CHMDC[1:0] bits, writing by the program takes precedence. An automatic transition to channel halt mode when the BOM[1:0] bits are set to B'01 or B'10 is made only when the CHMDC[1:0] bits are B'00 (channel communication mode). Furthermore, setting the RTBO bit in the CiCTRL register to 1 allows forcible return from the bus off state. As soon as the RTBO bit is set to 1, the state changes to the error active state. After 11 consecutive recessive bits have been detected, the condition of CAN module becomes ready for communication. In this case, the BORF flag is not set to 1 and the TEC[7:0] and REC[7:0] bits are initialized to H'00. Write 1 to the RTBO bit when the BOM[1:0] value is B'00.

Table 18-9. Registers Initialized in Global Reset Mode or Channel Reset Mode

Register	Bit / Flag
CiCTRL register	CHMDC[1:0]
CiCTRH register	CTMS[1:0], CTME
CiSTSL register	CHLTSTS, EPSTS, BOSTS, TRMSTS, RECSTS, COMSTS
CiSTSH register	REC[7:0], TEC[7:0]
CiERFLL register	ADERR, B0ERR, B1ERR, CERR, AERR, FERR, SERR, ALF, BLF, OVLF, BORF, BOEF, EPF, EWF, BEF
CiERFLH register	CRCREG[14:0]
CFCCLk register	When transmit/receive FIFO buffer is in transmit mode: CFE
CFSTSk register	When transmit/receive FIFO buffer is in transmit mode: CFMC[5:0], CFTXIF, CFRXIF, CFMLT, CFFLL, CFEMP
TMCp register	TMOM, TMTAR, TMTR
TMSTSp register	TMTARM, TMTRM, TMTRF[1:0], TMTSTS
TMTRSTS register	TMTRSTSp
TMTCSTS register	TMTCSTSp
TMTASTS register	TMTASTSp
THLCCi register	THLE
THLSTSi register	THLMC[3:0], THLIF, THLELT, THLFLL, THLEMP
GTINTSTS register	THIFi, CFTIFi, TAIFi, TSIFi

Remark i = 0, k = 0, p = 0 to 3

Table 18-10. Registers Initialized Only in Global Reset Mode

Register	Bit / Flag
GSTS register	GHLTSTS
GERFLL register	THLES, MES, DEF
GTSC register	TS[15:0]
RMND0 register	RMNSn
RFCCm register	RFE
RFSTSm register	RFMC[5:0], RFIF, RFMLT, RFFLL, RFEMP
CFCCLk register	When transmit/receive FIFO buffer is in receive mode: CFE
CFSTSk register	When transmit/receive FIFO buffer is in receive mode: CFMC[5:0], CFTXIF, CFRXIF, CFMLT, CFFLL, CFEMP
RFMSTS register	RFmMLT
CFMSTS register	CFkMLT
RFISTS register	RFmIF
CFISTS register	CFkIF
GTSTCFG register	RTMPS[2:0]
GTSTCTRL register	RTME

Remark k = 0, m = 0, 1, n = 0 to 15

18.5 Reception Function

There are two reception types.

- Reception by receive buffers:
  Zero to 16 receive buffers can be shared by all channels. Since messages stored in receive buffers are overwritten at each reception, the latest receive data can always be read.
- Reception by receive FIFO buffers and transmit/receive FIFO buffers (receive mode):
  Two receive FIFO buffers can be shared by all channels and one dedicated transmit/receive FIFO buffer is provided for each channel. The FIFO buffers can hold the number of received messages set by the RFDC[2:0] bits and CFDC[2:0] bits, and massages can be read sequentially from the oldest.

18.5.1 Data Processing Using the Receive Rule Table

Data processing using the receive rule table allows selected messages to be stored in the specified buffer. Data processing includes acceptance filter processing, DLC filter processing, routing processing, label addition processing, and mirror function processing.

Up to 16 receive rules can be registered per channel. If receive rules are not set, no message can be received. Figure 18-4 illustrates how receive rules are registered.

Figure 18-4. Entry of Receive Rules

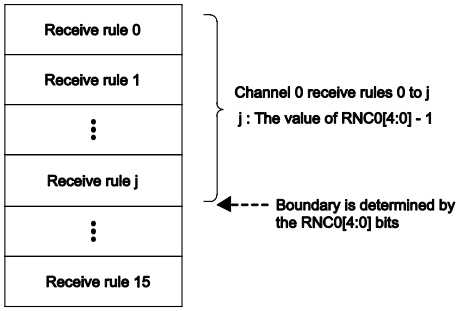

Remark RNC0[4:0]: Bits in the GAFLCFG register

Each receive rule consists of 12 bytes in the GAFLIDLj, GAFLIDHj, GAFLMLj, GAFLMHj, GAFLPLj, and GAFLPHj registers (j = 0 to 15). The GAFLIDLj and GAFLIDHj registers (j = 0 to 15) are used to set ID, IDE bit, RTR bit, and the mirror function, the GAFLMLj and GAFLMHj registers are used to set mask, the GAFLPLj and GAFLPHj registers are used to set label information to be added, DLC value, and storage receive buffer, and storage FIFO buffer.

(1) Acceptance Filter Processing

In the acceptance filter processing, the ID data, IDE bit, and RTR bit in a received message are compared with the ID data, IDE bit, and RTR bit set in the receive rule of the corresponding channel. When all these bits match, the message passes through the acceptance filter processing. The ID data, IDE bit, and RTR bit in a received message which correspond to bits that are set to 0 (bits are not compared) in the GAFLMLj and GAFLMHj registers are not compared and are regarded as matched.

Check begins with the receive rule with the smallest rule number of the corresponding channel. When all the bits to be compared in a received message match the bits set in the receive rule or when all the receive rules are compared without any match, filter processing stops. If there is no matching receive rule, the received message is not stored in the receive buffer or FIFO buffer.

Figure 18-5. Acceptance Filter Function

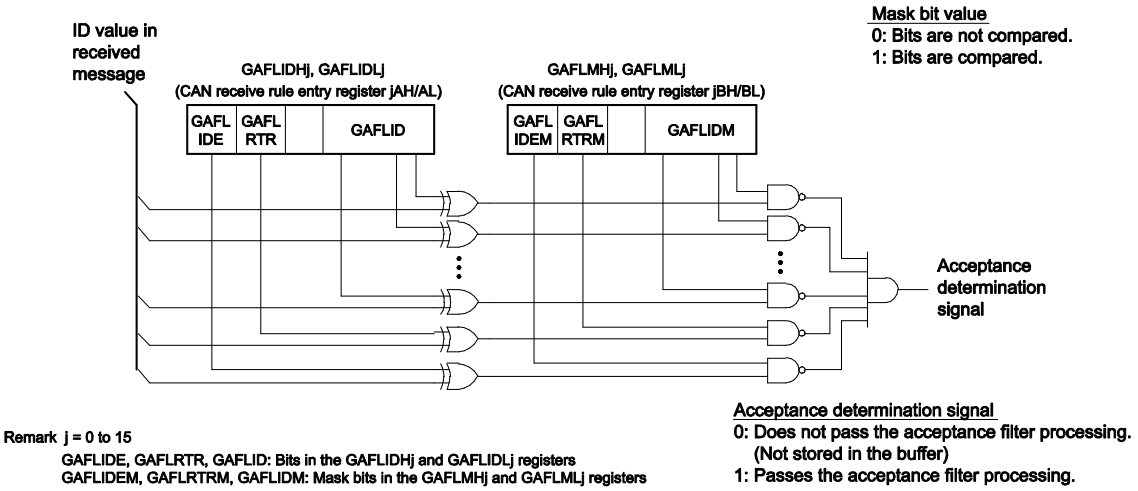

(2) DLC Filter Processing

When the DCE bit in the GCFGL register is set to 1 (DLC check is enabled), DLC filter processing is added to messages that passed through the acceptance filter processing. When the DLC value in a message is equal to or larger than the DLC value set in the receive rule, the message passes through the DLC filter processing.

When a message has passed through the DLC filter processing with the DRE bit in the GCFGL register set to 0 (DLC replacement is disabled), the DLC value in the received message is stored in the buffer. In this case, all the data bytes in the received message are stored in the buffer.

When a message has passed through the DLC filter processing with the DRE bit in the GCFGL register set to 1 (DLC replacement is enabled), the DLC value in the receive rule is stored in the buffer instead of the DLC value in the received message. In this case, a value of H'00 is written to data bytes that are larger than the DLC value in the receive rule.

When the DLC value in the received message is smaller than that in the receive rule, the message does not pass through the DLC filter processing. In this case, the message is not stored in the receive buffer or the FIFO buffer and the DEF flag in the GERFLL register is set to 1 (a DLC error is present).

(3) Routing Processing

Messages that passed through the acceptance filter processing and the DLC filter processing are stored in receive buffers, receive FIFO buffers, or transmit/receive FIFO buffers (set to receive mode). Message storage destination is set by the GAFLRMV, GAFLRMDP[6:0], GAFLFDP4, and GAFLFDP[1:0] bits in the GAFLPLj register (j = 0 to 15). Messages that passed through the acceptance filter processing and the DLC filter processing can be stored in up to two buffers.

(4) Label Addition Processing

It is possible to add 12-bit label information to messages that passed through the filter processing and store them in buffers. This label information is set in the GAFLPTR[11:0] bits in the GAFLPHj register.

(5) Mirror Function Processing

The mirror function allows reception of messages transmitted from the own CAN node. The mirror function is made available by setting the MME bit in the GCFGL register to 1 (mirror function is enabled).

When the mirror function is in use, receive rules for which the GAFLLB bit in the GAFLIDHj register is set to 0 are used for data processing when receiving messages transmitted from other CAN nodes. When receiving messages transmitted from the own CAN node, receive rules for which the GAFLLB bit is set to 1 are used for data processing.

18.5.2 Timestamp

The timestamp counter is a 16-bit free-running counter used for recording message receive time. The timestamp counter value is fetched at the start-of-frame (SOF) timing of a message and is then stored in a receive buffer or a FIFO buffer together with the message ID and data. The clock obtained by frequency-dividing f_{CLK} by 2 ($f_{CLK}/2$) or CANi bit time clock is selectable as a timestamp counter clock source from the TSSS bit in the GCFGL register. The clock obtained by dividing the selected clock source by the TSP[3:0] value in the GCFGL register is used as the timestamp counter count source.

When the CANi bit time clock is used as a clock source, the timestamp counter stops when the corresponding channel transitions to channel reset mode or channel halt mode. When the clock obtained by frequency-dividing f_{CLK} by 2 ($f_{CLK}/2$) is used as a clock source, the timestamp function is not affected by channel mode.

The timestamp counter value is reset to H'0000 by setting the TSRST bit in the GCTRH register to 1.

Figure 18-6. Timestamp Function Block Diagram

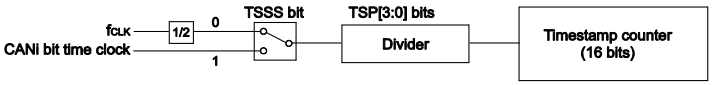

Remark TSSS, TSP[3:0]: Bits in the GCFGL register

18.6 Transmission Functions

There are two types of transmission.

- Transmission using transmit buffers:
  Each channel has 4 buffers.
- Transmission using transmit/receive FIFO buffers (transmit mode):
  Each channel has one FIFO buffer. Up to 16 messages can be contained in a single FIFO buffer. Each FIFO buffer is used with a link to a transmit buffer. Only the message to be transmitted next in a FIFO buffer becomes the target of transmit priority determination. Messages are transmitted sequentially on a first-in, first-out basis.

Figure 18-7 shows the allocation of transmit/receive FIFO buffer link.

Figure 18-7. Allocation of Transmit/Receive FIFO Buffer Links

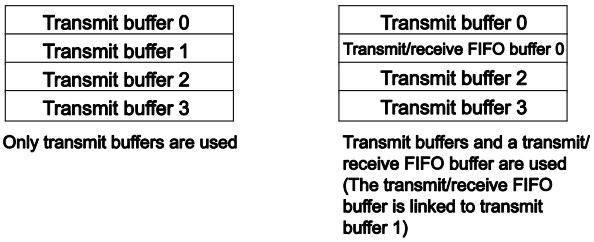

18.6.1 Transmit Priority Determination

If transmit requests are issued from multiple buffers in the same channel, transmit priority is determined.

The priority is determined by using one of the following methods.

- ID priority (TPRI bit = 0)
- Transmit buffer number priority (TPRI bit = 1)

The setting of the TPRI bit in the GCFGL register is enabled in all CAN channels.

When the TPRI bit is set to 0, messages are transmitted according to the priority of stored message IDs. Priority of IDs conforms to the CAN bus arbitration specification defined in the CAN specifications. IDs of messages stored in transmit buffers and transmit/receive FIFO buffers (set to transmit mode) are targets of priority determination. When transmit/receive FIFO buffers are used, the oldest message in a FIFO buffer becomes the target of priority determination. When a message is being transmitted from a transmit/receive FIFO buffer, the next message in the FIFO buffer becomes the target of priority determination.

When the TPRI bit is set to 1, the message in the transmit buffer of the minimum number among buffers with a transmit request is transmitted first. When transmit/receive FIFO buffers are linked to transmit buffers, transmit priority is determined according to linked transmit buffer numbers.

When messages are retransmitted due to an arbitration lost or an error, transmit priority determination is made again regardless of the TPRI bit setting.

18.6.2 Transmission Using Transmit Buffers

Setting the transmit request bit (TMTR bit in the TMCp register) in a transmit buffer to 1 (transmission is requested) allows transmission of data frames or remote frames.

Transmit result is shown by the TMTRF[1:0] flag in the corresponding TMSTSp register (p = 0 to 3). When transmit completes successfully, the TMTRF[1:0] flag is set to B'10 (transmission has been completed (without transmit abort request)) or B'11 (transmission has been completed (with transmit abort request)).

(1) Transmit Abort Function

With respect to transmit buffers for which the TMTRM bit in the TMSTSp register is set to 1 (a transmit request is present), when the TMTAR bit in the TMCp register is set to 1 (transmit abort is requested), the transmit request is canceled. When transmit abort is completed, the TMTRF[1:0] flag in the TMSTSp register is set to B'01 (transmit abort has been completed) and the transmit request is canceled (clearing the TMTRM bit to 0).

A message that is being transmitted or a message to be transmitted next according to the transmit priority determination cannot be aborted. However, when an arbitration lost or an error has occurred while a message for which the TMTAR bit is set to 1 is being transmitted, retransmission is not performed.

(2) One-Shot Transmission Function (Retransmission Disabling Function)

When the TMOM bit in the TMCp register is set to 1 (one-shot transmission is enabled), transmission is performed only once. Even if an arbitration lost or an error occurs, retransmission is not performed.

One-shot transmit result is shown by the TMTRF[1:0] flag in the corresponding TMSTSp register. When one-shot transmit completes successfully, the TMTRF[1:0] flag is set to B'10 or B'11. When an arbitration lost or an error has occurred, the TMTRF[1:0] flag is set to B'01 (transmit abort has been completed).

18.6.3 Transmission Using FIFO Buffers

Messages of a volume of the FIFO buffer depth set by the CFDC[2:0] bits in the CFCCLk register can be stored in a single transmit/receive FIFO buffer. Messages are transmitted sequentially on a first-in, first-out basis.

Transmit/receive FIFO buffers are linked to transmit buffers selected by the CFTML[1:0] bits in the CFCCHk register. When the CFE bit in the CFCCLk register is set to 1 (transmit/receive FIFO buffers are used), transmit/receive FIFO buffers become targets of transmit priority determination. Priority determination is made for only the message to be transmitted next in a FIFO buffer.

When the CFE bit is set to 0 (no transmit/receive FIFO buffer is used), the CFEMP flag is set to 1 (the transmit/receive FIFO buffer contains no message (buffer empty)) at the timing below.

- The transmit/receive FIFO buffer becomes empty immediately when the message in it is not being transmitted or is not to be transmitted next.
- The transmit/receive FIFO buffer becomes empty after transmission completion, CAN bus error detection, or arbitration lost when the message in it is being transmitted or to be transmitted next.

When the CFE bit is cleared to 0, all messages in transmit/receive FIFO buffers are lost and messages cannot be stored in FIFO buffers. Confirm that the CFEMP flag is set to 1 before setting the CFE bit to 1 again.

(1) Interval Transmission Function

To transmit messages from the same FIFO buffer while a transmit/receive FIFO buffer that is set to transmit mode is in use, message transmission interval time can be set.

Immediately after the first message has been transmitted successfully from the FIFO buffer with the CFE bit in the CFCCLk register set to 1, the interval timer starts counting (after EOF7 of the CAN protocol). After that, when the interval time has passed, the next message is transmitted. The interval timer stops in channel reset mode or by clearing the CFE bit to 0.

The interval time is set by the CFITT[7:0] bits in the CFCCHk register. When the interval timer is not used, set the CFITT[7:0] bits to H'00.

Select an interval timer count source by the CFITR and CFITSS bits in the CFCCHk register. When the CFITR and CFITSS bits are set to B'00, the clock obtained by frequency-dividing $f_{CLK}/2$ by the ITRCP[15:0] value is used as a count source. When the CFITR and CFITSS bits are set to B'10, the clock obtained by frequency-dividing $f_{CLK}/2$ by the ITRCP[15:0] value × 10 is used as a count source. When the CFITR and CFITSS bits are set to B'x1, the CANi bit time clock is used as a count source.

The interval time is calculated by the following equations where M is the set ITRCP[15:0] value and N is the set CFITT[7:0] value.

1. When CFITR and CFITSS = B’00

$$\frac{1}{f_{CLK}} \times 2 \times M \times N$$

2. When CFITR and CFITSS = B’10

$$\frac{1}{f_{CLK}} \times 2 \times M \times 10 \times N$$

3. When CFITR and CFITSS = B’x1 (f_{CANBIT} is CANi bit time clock frequency)

$$\frac{1}{f_{CANBIT}} \times N$$

Figure 18-8 shows the interval timer block diagram.

Figure 18-8. Interval Timer Block Diagram

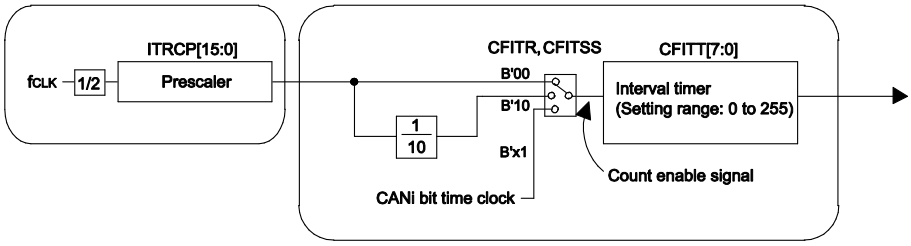

Remark ITRCP[15:0]: Bits in the GCFGH register
CFITR, CFITSS, CFITT[7:0]: Bits in the CFCCHk register (k = 0)

Figure 18-9 shows the interval timer timing chart.

Figure 18-9. Interval Timer Timing Chart

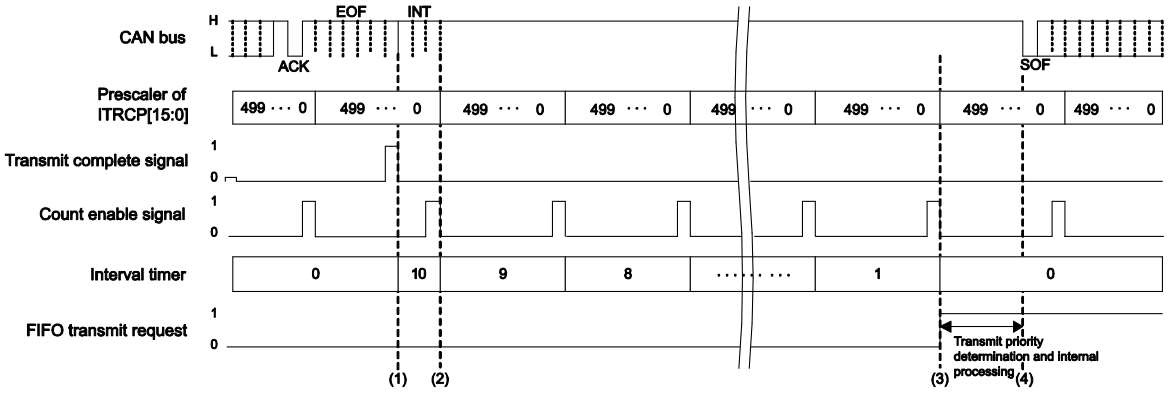

$$\text{Interval time (logical value)} = \frac{1}{f_{CLK}} \times 2 \times m \text{ (ITRCP[15:0] value)} \times \text{CFITT[7:0] value}$$

Remark f_{CLK}: CPU/peripheral hardware clock
ITRCP[15:0]: Bits in the GCFGH register (The set value is 500 in this figure.)
CFITT[7:0]: Bits in the CFCCHk register (The set value is 10 in this figure.)

(1) The interval timer starts counting upon completion of transmission. Since the prescaler is not initialized at the time of transmission completion, the first interval time contains an error of up to one count of the interval timer.
(2) The interval timer is decremented by the next count enable signal.
(3) When the interval timer has decreased to 0, the transmit/receive FIFO buffer issues a transmit request.
(4) The transmit/receive FIFO buffer is determined for the next transmission by the priority determination, it starts transmitting data. Transmission starts with a delay of three CANi bit time clock cycles or less from the issue of transmit request.

18.6.4 Transmit History Function

Information of transmitted messages can be stored in the transmit history buffer. Each channel has a single transmit history buffer that can contain 8 sets of transmit history data.

A message transmit source buffer type can be selected by the THLDTE bit in the THLCCi register. Whether to store transmit history data for each message can be set by the THLEN bit in the CFIDHk register.

After transmit completes successfully, information of the following transmit messages is stored in the transmit history buffer as transmit history data. After successful completion of transmit, process may be delayed by up to 38 clocks of f_{CLK} before the transmit history data is stored.

- Buffer type B'01: Transmit buffer
  B'10: Transmit/receive FIFO buffer
- Buffer number Number of source transmit buffer or transmit/receive FIFO buffer.
  This number depends on buffer types. See Table 18-11.
- Label data Label information of transmit message

Table 18-11. Transmit History Data Buffer Numbers

Buffer type / Buffer No.	B'01	B'10
B'00	Transmit buffer 0	Numbers of transmit buffers linked to transmit/receive FIFO buffers by the CFTML[1:0] bits in the CFCCHk register.
B'01	Transmit buffer 1	
B'10	Transmit buffer 2	
B'11	Transmit buffer 3	

Label data is used to identify each message. A unique label data can be added to each message transmitted from a transmit buffer or transmit/receive FIFO buffer.

Transmit history data can be read from the THLACCi register. If it is attempted to store new transmit history data while the buffer is full, the buffer overflows and the new data is discarded.

18.7 Test Function

The test function is classified into communication tests and global tests.

Communication tests: Performed for each channel.

- Standard test mode
- Listen-only mode
- Self-test mode 0 (external loopback mode)
- Self-test mode 1 (internal loopback mode)

Global tests: Performed in entire module

- RAM test (read/write test)

18.7.1 Standard Test Mode

Standard test mode allows CRC test.

18.7.2 Listen-Only Mode

Listen-only mode allows reception of data frames and remote frames. Only recessive bits are transmitted on the CAN bus, and the ACK bit, overload flag, and active error flag are not transmitted. Listen-only mode is available for detecting the communication speed.

Do not make a transmit request from any buffer in listen-only mode.

Figure 18-10 shows the connection when listen-only mode is selected.

Figure 18-10. Connection when Listen-Only Mode is Selected

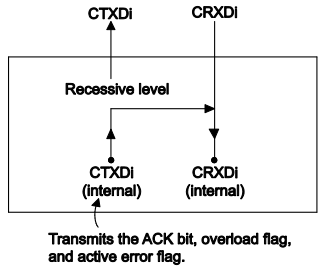

Remark i = 0

18.7.3 Self-Test Mode (Loopback Mode)

In self-test mode, transmitted messages are compared with the receive rule of the own channel and the messages are stored in a buffer if they have passed through the filter processing. Messages transmitted from other CAN nodes are compared only with the receive rule for which the GAFLLB bit in the GAFLIDHj register (j = 0 to 15) is set to 0 (when a message transmitted from another CAN node is received).

If the mirror function and self-test mode are both enabled, the self-test mode setting takes precedence.

(1) Self-Test Mode 0 (External Loopback Mode)

Self-test mode 0 is used to perform a loopback test within a channel including the CAN transceiver.

In self-test mode 0, transmitted messages are handled as messages received through the CAN transceiver and are stored in a buffer. An ACK bit is generated to receive messages transmitted from the own CAN node.

Figure 18-11 shows the connection when self-test mode 0 is selected.

Figure 18-11. Connection when Self-Test Mode 0 is Selected

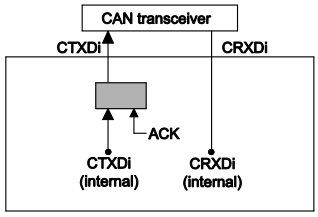

Remark i = 0

(2) Self-Test Mode 1 (Internal Loopback Mode)

In self-test mode 1, transmitted messages are handled as received messages and are stored in a buffer. An ACK bit is generated to receive messages transmitted from the own CAN node.

In self-test mode 1, internal feedback from the internal CTXDi pin to the internal CRXDi pin is performed. The external CRXDi pin input is isolated. The external CTXDi pin outputs only recessive bits.

Figure 18-12 shows the connection when self-test mode 1 is selected.

Figure 18-12. Connection when Self-Test Mode 1 is Selected

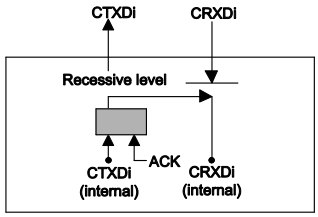

Remark i = 0

18.7.4 RAM Test

The RAM test function allows accesses to all CAN RAM addresses.

When the RAM test function is used, the RAM is divided into pages of 256 bytes each. RAM test page is set by the RTMPS[2:0] bits in the GTSTCFG register. Data in the set page can be read from and written to the RPGACCr register (r = 0 to 127). The available total RAM size is 544 bytes (H'0220).

18.8 Interrupt

The CAN module has 6 interrupts that are grouped into global interrupts and channel interrupts.

Global interrupts (2 interrupts):

- CAN global receive FIFO interrupt
- CAN global error interrupt

Channel interrupts (4 interrupts per channel):

- CANi channel transmit interrupt
  CANi transmit complete interrupt
  CANi transmit abort interrupt
  CANi transmit/receive FIFO transmit complete interrupt (transmit mode)
  CANi transmit history interrupt
- CANi transmit/receive FIFO receive interrupt
- CANi channel error interrupt
- CANi wakeup interrupt

- CAN interrupt except CANi wakeup interrupt
  When an interrupt request is generated, the corresponding CAN module interrupt request flag is set to 1 (interrupt request present). In that case, when the interrupt enable bit is set to 1 (enabling interrupts), an interrupt request is output from the CAN module. (Generation of interrupts also is controlled by an interrupt functions.)
  Setting the interrupt request flag to 0 (no interrupt request present) or setting the interrupt enable bit to 0 (disabling interrupts) clears the current interrupt request. The next interrupt request is not generated until the interrupt request is cleared.

- CANi wakeup interrupt
  The CANi wakeup interrupt is generated in every mode when a falling edge in the CRXDi pin is detected. When the CANi wakeup interrupt is used, set the function of the corresponding port to CRXDi.
  The CANi wakeup interrupt is controlled by the interrupt function.

For details on the setting of the interrupt functions, refer to **CHAPTER 21 INTERRUPT FUNCTIONS**.

Table 18-12 lists the CAN interrupt sources. Figure 18-13 shows the CAN global interrupt block diagram. Figure 18-14 shows the CAN channel interrupt block diagram.

Table 18-12. List of CAN Interrupt Sources

Item	Interrupt Source		Corresponding Interrupt Request Flag[Note]	Corresponding Interrupt Enable Bit [Note]
Global interrupts	CAN global receive FIFO	Receive FIFO 0	RFIF in the RFSTS0 register	RFIE in the RFCC0 register
		Receive FIFO 1	RFIF in the RFSTS1 register	RFIE in the RFCC1 register
	CAN global error		DEF in the GERFLL register	DEIE in the GCTRL register
			MES in the GERFLL register	MEIE in the GCTRL register
			THLES in the GERFLL register	THLEIE in the GCTRL register
Channel interrupts	CANi channel transmit	CANi transmit complete	TMTRF[1:0] in the TMSTSp register	TMIEp in the TMIEC register
		CANi transmit abort	TMTRF[1:0] in the TMSTSp register	TAIE in the CiCTRH register
		CANi transmit/receive FIFO transmit	CFTXIF in the CFSTSk register	CFTXIE in the CFCCLk register
		CANi transmit history	THLIF in the THLSTSi register	THLIE in the THLCCi register
	CANi transmit/receive FIFO receive		CFRXIF in the CFSTSk register	CFRXIE in the CFCCLk register
	CANi channel error		BEF in the CiERFLL register	BEIE in the CiCTRL register
			ALF in the CiERFLL register	ALIE in the CiCTRL register
			BLF in the CiERFLL register	BLIE in the CiCTRL register
			OVLF in the CiERFLL register	OLIE in the CiCTRL register
			BORF in the CiERFLL register	BORIE in the CiCTRL register
			BOEF in the CiERFLL register	BOEIE in the CiCTRL register
			EPF in the CiERFLL register	EPIE in the CiCTRL register
			EWF in the CiERFLL register	EWIE in the CiCTRL register
	CANi wakeup		None	None

Note For details on the interrupt request flags and interrupt enable bits, refer to **CHAPTER 21 INTERRUPT FUNCTIONS**.

i = 0, k = 0, p = 0 to 3

Figure 18-13. CAN Global Interrupt Block Diagram

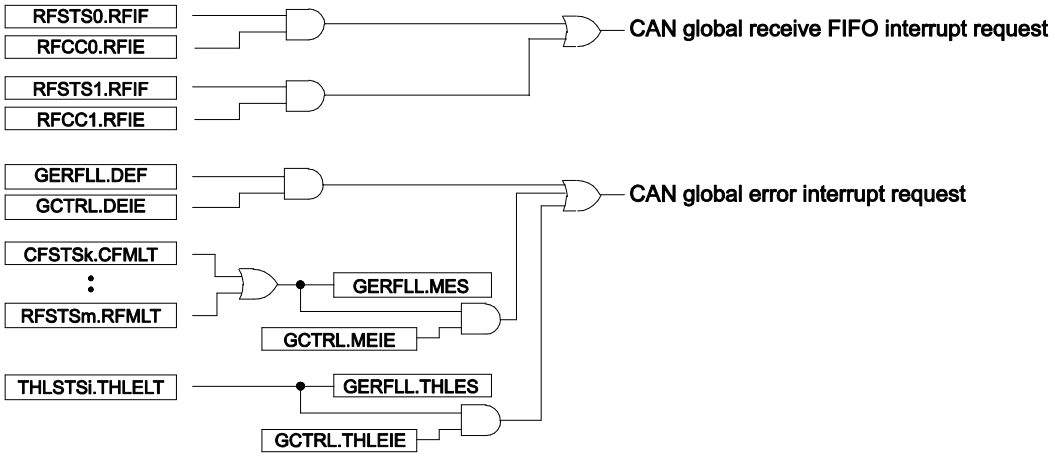

Remark i = 0
k = 0
m = 0, 1

Figure 18-14. CAN Channel Interrupt Block Diagram

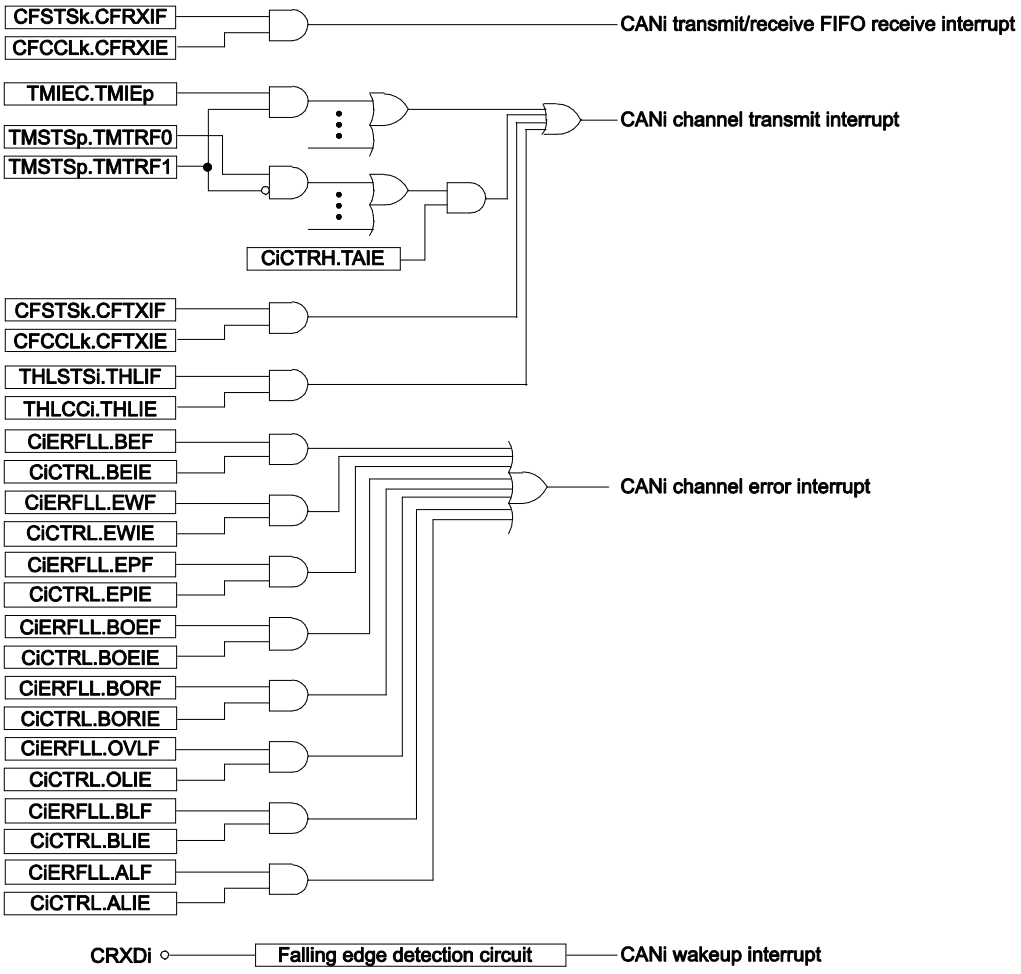

Remark i = 0
k = 0
p = 0 to 3

18.9 RAM Window

The CAN area from H'F03A0 to H'F0681 consists of two windows. The RPAGE bit in the GRWCR register is used to switch the allocation of registers.

[Registers allocated when the RPAGE bit is set to 0 (window 0 selected)]

- CAN receive rule entry registers: GAFLIDLj, GAFLIDHj, GAFLMLj, GAFLMHj, GAFLPLj, GAFLPHj
- CAN RAM test registers: RPGACCr

[Registers allocated when the RPAGE bit is set to 1 (window 1 selected)]

- CAN receive buffer registers: RMIDLn, RMIDHn, RMTSn, RMPTRn, RMDF0n to RMDF3n
- CAN receive FIFO access registers: RFIDLm, RFIDHm, RFTSm, RFPTRm, RFDF0m to RFDF3m
- CANi transmit/receive FIFO access registers: CFIDLk, CFIDHk, CFTSk, CFPTRk, CFDF0k to CFDF3k
- CANi transmit buffer registers: TMIDLp, TMIDHp, TMPTRp, TMDF0p to TMDF3p
- CANi transmit history buffer access register: THLACCi

Figure 18-15. RAM Window

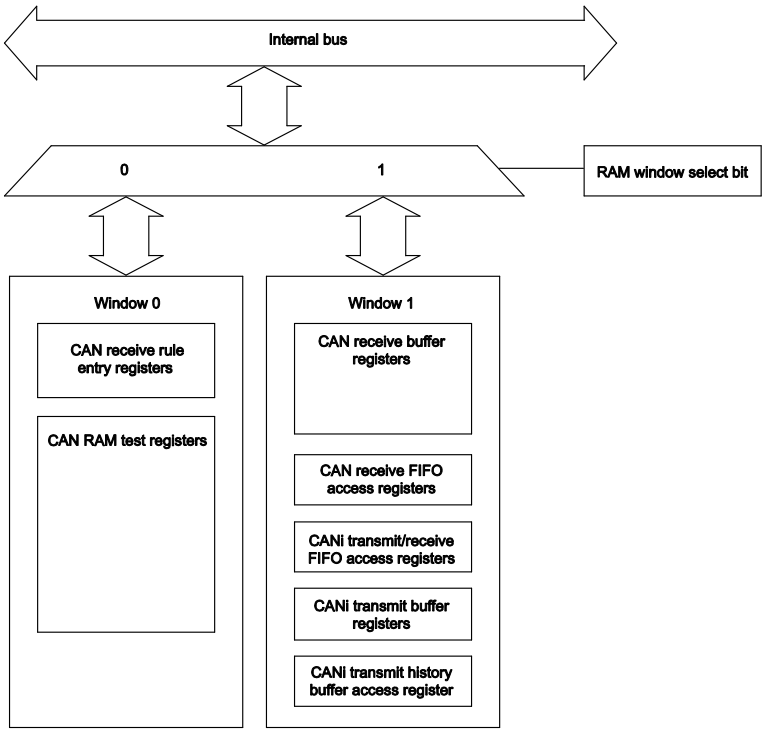

18.10 Initial Settings

The CAN module initializes the CAN RAM after the operation of the CAN module is enabled. The RAM initialization time is 276 cycles of f_{CLK}. The GRAMINIT flag in the GSTS register is set to 1 (CAN RAM initialization is ongoing) during the RAM initialization and is cleared to 0 (CAN RAM initialization is finished) when the initialization is completed. Make CAN settings after the GRAMINIT flag is cleared to 0.

Figure 18-16 shows the CAN setting procedure after the operation of the CAN module is enabled.

Figure 18-16. CAN Setting Procedure after the Operation of the CAN Module is Enabled

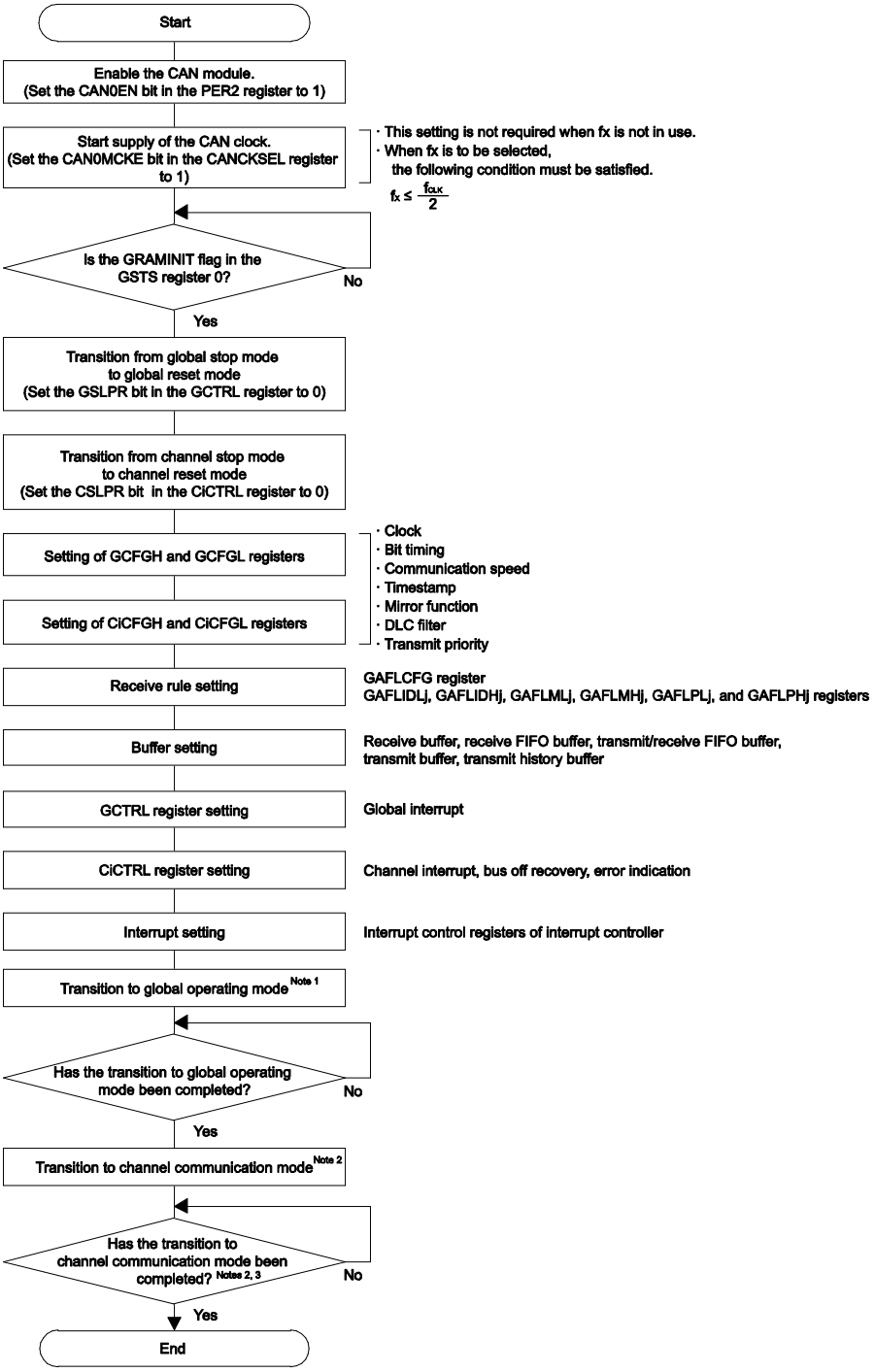

Notes 1. If the high-speed system clock (f_{MX}) is to be selected as the LIN communications clock source, and the highspeed on-chip oscillator clock (f_{IH}) or the PLL clock with its source as the high-speed on-chip oscillator clock is to be selected as the source of the clock signal for f_{CLK}, make sure that the condition (LIN communications clock source) < f_{CLK} is satisfied.

2. If the high-speed system clock is to be selected as f_{CLK}, do not select f_X as f_{CAN}.

Remark i = 0
j = 0 to 15

18.10.1 Clock Setting

Set the CAN clock (f_{CAN}) as a clock source of the CAN module. Select the clock obtained by frequency-dividing f_{CLK} by 2 ($f_{CLK}/2$) or the X1 clock (fx) with the DCS bit in the GCFGL register.

18.10.2 Bit Timing Setting

In the CAN protocol, one bit of a communication frame consists of three segments, SS, TSEG1, and TSEG2. Two of the segments, TSEG1 and TSEG2, can be set by the CiCFGH register for each channel. Sample point timing can be determined by setting two segments. This timing can be adjusted in units of 1 Time Quantum (referred to as Tq hereinafter). 1 Tq equals to one CANi Tq clock cycle. The CANi Tq clock is obtained by selecting the clock source with the DCS bit in the GCFGL register and selecting the clock division ratio with the BRP[9:0] bits in the CiCFGL register.

Figure 18-17 shows the bit timing chart. Table 18-13 shows an example of bit timing setting.

Figure 18-17. Bit Timing Chart

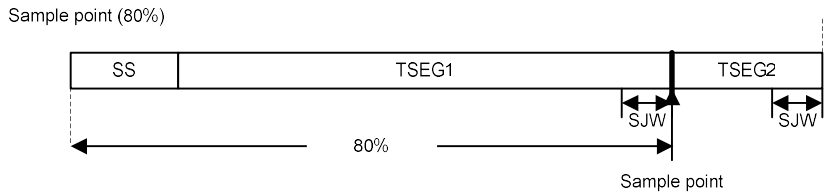

Remark SS = 1 Tq fixed
Set TSEG1 to a range of 4 Tq to 16 Tq.
Set TSEG2 to a range of 2 Tq to 8 Tq.
Set SJW to a range of 1 Tq to 4 Tq.
Set SS + TSEG1 + TSEG2 to a range of 8 Tq to 25 Tq.
TSEG1 > TSEG2 ≥ SJW

- SS (synchronization segment):
  The SS is a segment that performs synchronization by monitoring the edge from recessive to dominant bits in the Interframe Space.
  Interframe Space consists of Intermission, Suspend Transmission, and Bus Idle. All nodes can start transmission during Bus Idle.
- TSEG1 (time segment 1):
  TSEG1 is a segment that absorbs physical delay on the CAN network. The physical delay on the CAN network is twice of the total of the delay on the CAN bus, the delay in the input comparator, and the delay in the output driver.
- TSEG2 (time segment 2):
  TSEG2 is a segment that compensates phase error due to an error in frequency.
- SJW (resynchronization jump width)
  The SJW is a length to extend or reduce time segment to compensate an error in phase due to phase error.

Table 18-13. Example of Bit Timing Setting

1 Bit	Set Value (Tq)				Sample Point (%) Note: See Figure 18-17.
	SS	TSEG1	TSEG2	SJW	
8 Tq	1	4	3	1	62.50
	1	5	2	1	75.00
10 Tq	1	6	3	1	70.00
	1	7	2	1	80.00
16 Tq	1	10	5	1	68.75
	1	11	4	1	75.00
20 Tq	1	13	6	1	70.00
	1	15	4	3	80.00
24 Tq	1	15	8	1	66.67
	1	16	7	1	70.83

18.10.3 Communication Speed Setting

Set the CAN communication speed for each channel using the f_{CAN}, baud rate prescaler division value (BRP[9:0] bits in the CiCFGL register), and Tq count per bit time.

Figure 18-18 shows the CAN clock control block diagram, and Table 18-14 shows an example of the communication speed setting.

Figure 18-18. CAN Clock Control Block Diagram

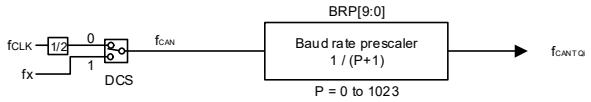

$$\text{Communication speed} = \frac{f_{CAN}}{\text{Baud rate prescaler division value x (Tq count of 1 bit time)}}$$

Caution When fx is to be selected, the following condition must be satisfied.

$$f_X \leq \frac{f_{CLK}}{2} \quad \text{Notes 1, 2}$$

Notes 1. If the high-speed on-chip oscillator clock (f_{IH}) or the PLL clock with its source as the high-speed on-chip oscillator clock is to be selected as the source of the clock signal for f_{CLK}, make sure that the condition $f_X < f_{CLK}/2$ is satisfied.

<R> 2. If f_{CLK} is the high-speed system clock(f_{MX}), do not select f_X as f_{CAN}.

Remark i = 0

DCS: Bit in the GCFGL register

BRP[9:0]: Bits in the CiCFGL register

f_{CAN}: CAN clock

f_{CANTQi}: CANi Tq clock

<R> f_X: X1 clock oscillation

<R> f_{CLK}: CPU/peripheral hardware clock

Table 18-14. Example of Communication Speed Setting

Communication Speed \ f_{CAN} Note	16 MHz	8 MHz
1 Mbps	8 Tq (2) 16 Tq (1)	8 Tq (1)
500 Kbps	8 Tq (4) 16 Tq (2)	8 Tq (2) 16 Tq (1)
250 Kbps	8 Tq (8) 16 Tq (4)	8 Tq (4) 16 Tq (2)
83.3 Kbps	8 Tq (24) 16 Tq (12)	8 Tq (12) 16 Tq (6)
33.3 Kbps	8 Tq (60) 10 Tq (48) 16 Tq (30) 20 Tq (24)	8 Tq (30) 10 Tq (24) 16 Tq (15) 20 Tq (12)

Note Values in ( ) are baud rate prescaler division values.

18.10.4 Receive Rule Setting

Receive rules can be set using receive rule-related registers.

Up to 16 receive rules can be registered.

Figure 18-19 shows the receive rule setting procedure.

Figure 18-19. Receive Rule Setting Procedure

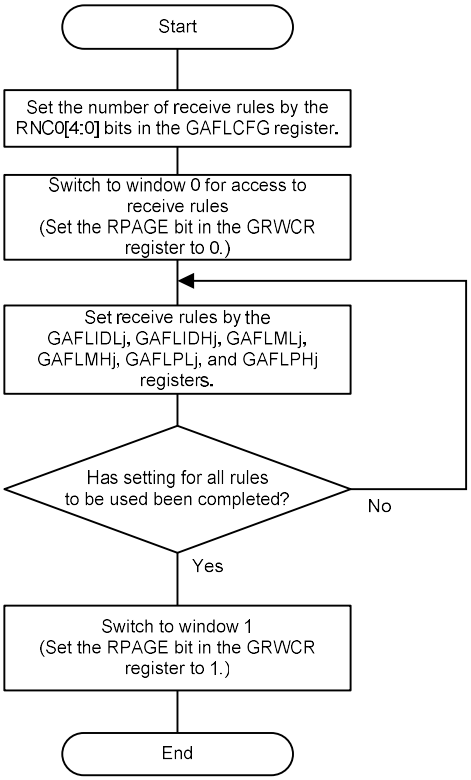

18.10.5 Buffer Setting

Set sizes and interrupt sources of buffers. For transmit/receive FIFO buffers that are set to transmit mode, set transmit buffers to be linked.

Figure 18-20 shows the buffer configuration. Figure 18-21 shows the buffer setting procedure.

Figure 18-20. Buffer Configuration

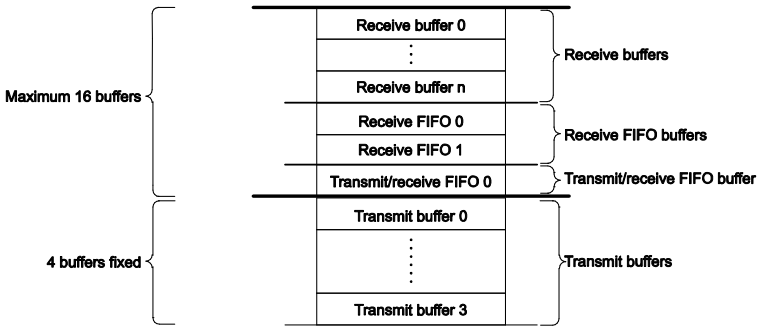

Caution Receive buffers, receive FIFO buffers, transmit/receive FIFO buffer, and transmit buffers are located in succession.

Remark n = 0 to 15

Figure 18-21. Buffer Setting Procedure

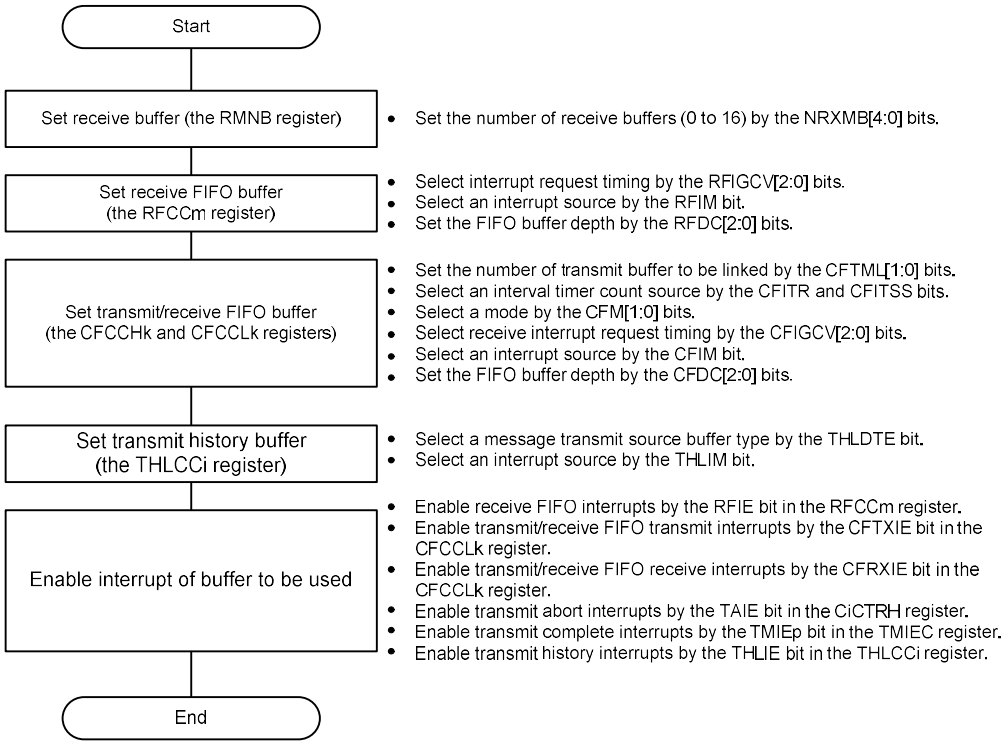

Remark i = 0
k = 0
m = 0, 1
p = 0 to 3

18.11 Reception Procedure

18.11.1 Receive Buffer Reading Procedure

When the processing to store received messages in a receive buffer starts, the RMNSn flag (n = 0 to 15) in the RMND0 register is set to 1 (receive buffer n contains a new message). Messages can be read from the RMIDLn, RMIDHn, RMTSn, RMPTRn, and RMDF0n to RMDF3n registers. If the next message has been received before the current message is read from the receive buffer, the message is overwritten. Figure 18-22 shows the receive buffer reading procedure.

Figure 18-22. Receive Buffer Reading Procedure

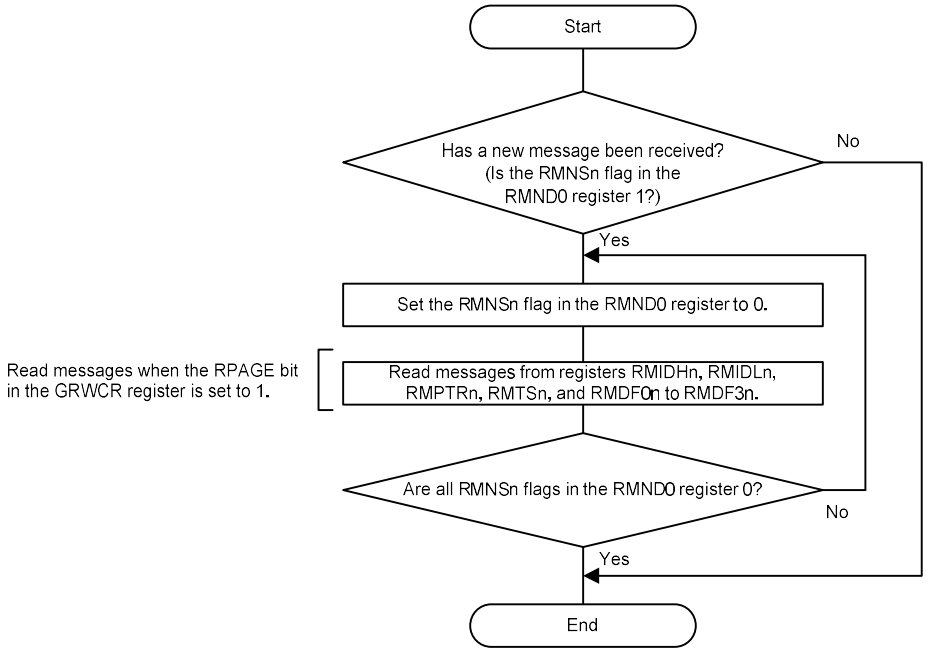

Remark n = 0 to 15

Figure 18-23. Receive Buffer Reception Timing Chart

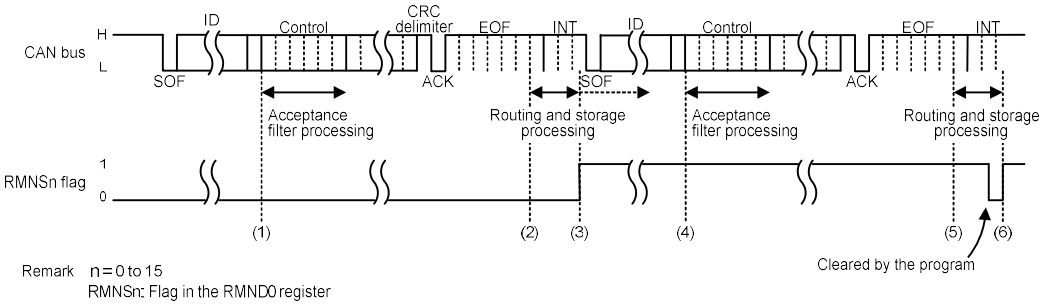

(1) When the ID field in a message has been received, the acceptance filter processing starts.

(2) When the message matches the receive rule of the corresponding channel and the message has been successfully received, the routing processing to transfer the message to the specified buffer starts. When the DCE bit in the GCFGL register is set to 1 (DLC check is enabled), the DLC filter processing starts at this time.

(3) When the message has passed through the DLC filter processing, the processing to store the message in the specified receive buffer starts.
When the message storage processing starts, the corresponding RMNSn flag in the RMND0 register is set to 1 (receive buffer n contains a new message (n = 0 to 15)). If other channels are performing filter processing or transmit priority determination processing, the routing processing and the storage processing may be delayed.

(4) When the ID field of the next message has been received, the acceptance filter processing starts.

(5) When the message matches the receive rule of the corresponding channel and the message has been successfully received, the routing processing to transfer the message to the specified buffer starts. When the DCE bit in the GCFGL register is set to 1 (DLC check is enabled), the DLC filter processing starts at this time.

(6) When the corresponding RMNSn flag is cleared to 0 (receive buffer n contains no new message (n = 0 to 15)), this flag is set to 1 again when the message storage processing starts. Even if the RMNSn flag remains 1, a new message is overwritten to the receive buffer. The RMNSn flag should not be cleared to 0 during storage of messages.

18.11.2 FIFO Buffer Reading Procedure

When received messages have been stored in one or more receive FIFO buffers or a transmit/receive FIFO buffer that is set to receive mode, the corresponding message count display counter (RFMC[5:0] bits in the RFSTSm register (m = 0, 1) or CFMC[5:0] bits in the CFSTSk register) is incremented. At this time, when the RFIE bit (receive FIFO interrupt is enabled) in the RFCCm register or the CFRXIE bit (transmit/receive FIFO receive interrupt is enabled) in the CFCCLk register is set to 1, an interrupt request is generated. Received messages can be read from the RFIDLm, RFIDHm, RFTSm, RFPTRm, and RFDF0m to RFDF3m registers (receive FIFO buffers) or the CFIDLk, CFIDHk, CFTSk, CFPTRk, and CFDF0k to CFDF3k registers (transmit/receive FIFO buffers). Messages in FIFO buffers can be read sequentially on a first-in, first-out basis.

When the message count display counter value matches the FIFO buffer depth (a value set by the RFDC[2:0] bits in the RFCCm register or the CFDC[2:0] bits in the CFCCLk register), the RFFLL or CFFLL flag is set to 1 (the receive FIFO buffer is full).

When all messages have been read out of the FIFO buffer, the RFEMP flag in the RFSTSm register or the CFEMP flag in the CFSTSk register is set to 1 (the receive FIFO buffer contains no unread message (buffer empty)).

If the RFE bit or the CFE bit is cleared to 0 (no receive FIFO buffer is used) with the interrupt request flag (RFIF flag in the RFSTSm register or CFRXIF flag in the CFSTSk register) set to 1 (a receive FIFO interrupt request is present), the interrupt request flag is not automatically cleared to 0. Clear the interrupt request flag to 0 by the program.

Figure 18-24. Transmit/Receive FIFO Buffer Reading Procedure

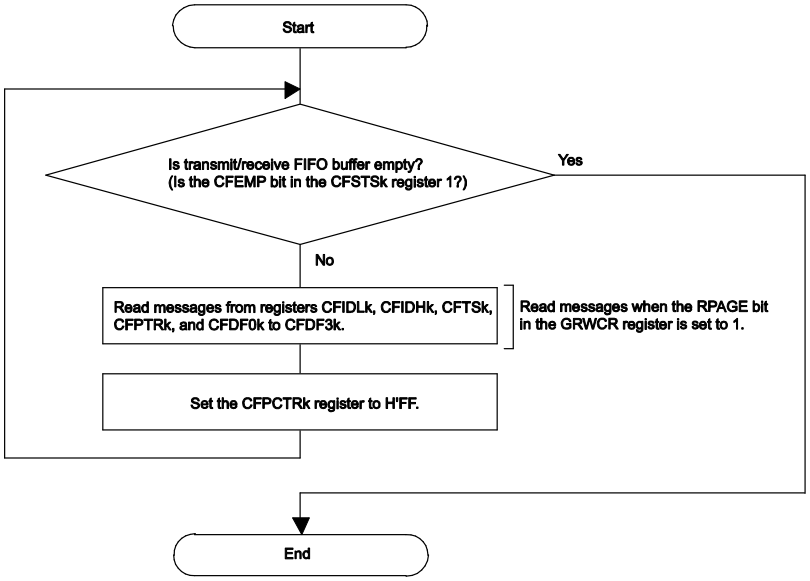

Remark k = 0

Figure 18-25. FIFO Buffer Reception Timing Chart

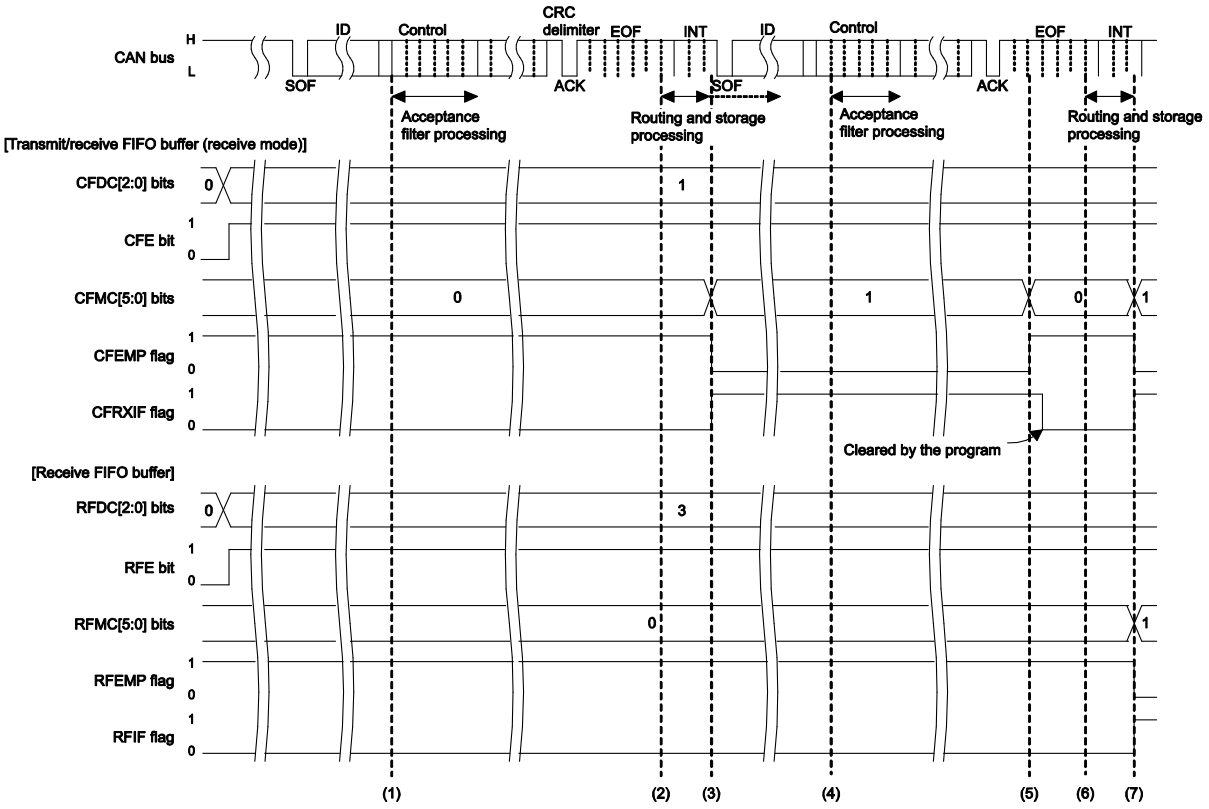

Remark k = 0, m = 0, 1
CFDC[2:0], CFE: Bits in the CFCCLk register
CFMC[5:0], CFEMP, CFRXIF: Flags in the CFSTSk register
RFDC[2:0], RFE: Bits in the RFCCm register
RFMC[5:0], RFEMP, RFIF: Flags in the RFSTSm register

(1) When the ID field in a message has been received, the acceptance filter processing starts.
(2) When the message matches the receive rule of the corresponding channel and the message has been successfully received, the routing processing to transfer the message to the specified buffer starts. When the DCE bit in the GCFGL register is set to 1 (DLC check is enabled), the DLC filter processing starts at this time.
(3) When the message has passed through the DLC filter processing and the CFE value in the CFCCLk register is 1 (transmit/receive FIFO buffers are used) and the CFDC[2:0] value in the CFCCLk register is B'001 or more, the message is stored in the transmit/receive FIFO buffer that is set to receive mode. The CFMC[5:0] value in the CFSTSk register is incremented and becomes H'01. When the CFIM bit in the CFCCLk register is set to 1 (a FIFO receive interrupt request is generated each time a message has been received), the CFRXIF flag in the CFSTSk register is set to 1 (a transmit/receive FIFO receive interrupt request is present). The CFRXIF flag can be reset to 0 by the program.
(4) When the ID field of the next message has been received, the acceptance filter processing starts.
(5) Read received messages from the CFIDLk, CFIDHk, CFTSk, CFPTRk, and CFDF0k to CFDF3k registers and write H'FF to the CFPCTRk register. Thereby the CFMC[5:0] bits in the CFSTSk register are decremented and become H'00, and the CFEMP flag in the CFSTSk register becomes 1 (the transmit/receive FIFO buffer contains no message (buffer empty)).
(6) When the message matches the receive rule of the corresponding channel and the message has been successfully received, the routing processing to transfer the message to the specified buffer starts. When the DCE bit in the GCFGL register is set to 1 (DLC check is enabled), the DLC filter processing starts at this time.

(7) The message is stored in the transmit/receive FIFO buffer set in receive mode, when the message has passed through the DLC filter process if the CFE bit is set to 1 (transmit/receive FIFO buffers are used) and the CFDC[2:0] bits are set to B'001 or more.
The CFMC[5:0] value is incremented to H'01. When the CFIM bit is set to 1 (an interrupt occurs each time a message has been received), the CFRXIF flag is set to 1 (a transmit/receive FIFO receive interrupt request is present).
The message is stored in the receive FIFO buffer, if the RFE bit in the RFCCm register is set to 1 (receive FIFO buffers are used) and RFDC[2:0] bits in the RFCCm register are set to B'001 or more.
The RFMC[5:0] value in the RFSTSm register is incremented to H'01. When the RFIM bit in the RFCCm register is set to 1 (an interrupt occurs each time a message has been received), the RFIF flag in the RFSTSm register is set to 1 (a receive FIFO interrupt request is present).

18.12 Transmission Procedure

18.12.1 Procedure for Transmission from Transmit Buffers

Figure 18-26 shows the procedure for transmission from transmit buffers.

Figure 18-27 shows a timing chart where messages are transmitted from two transmit buffers and transmission has been successfully completed. Figure 18-28 shows a timing chart where messages are transmitted from two transmit buffers and transmit abort has been completed.

Figure 18-26. Procedure for Transmission from Transmit Buffers

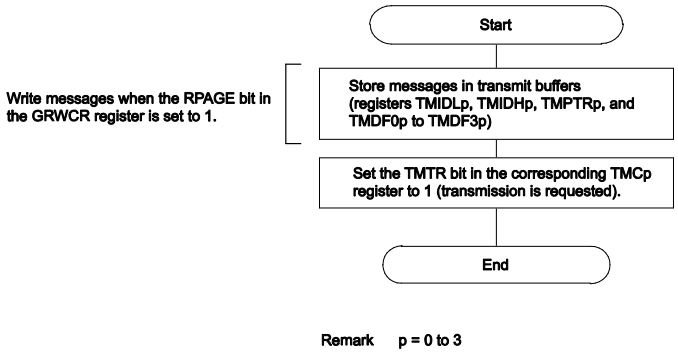

Figure 18-27. Transmit Buffer Transmission Timing Chart (Transmission Completed Successfully)

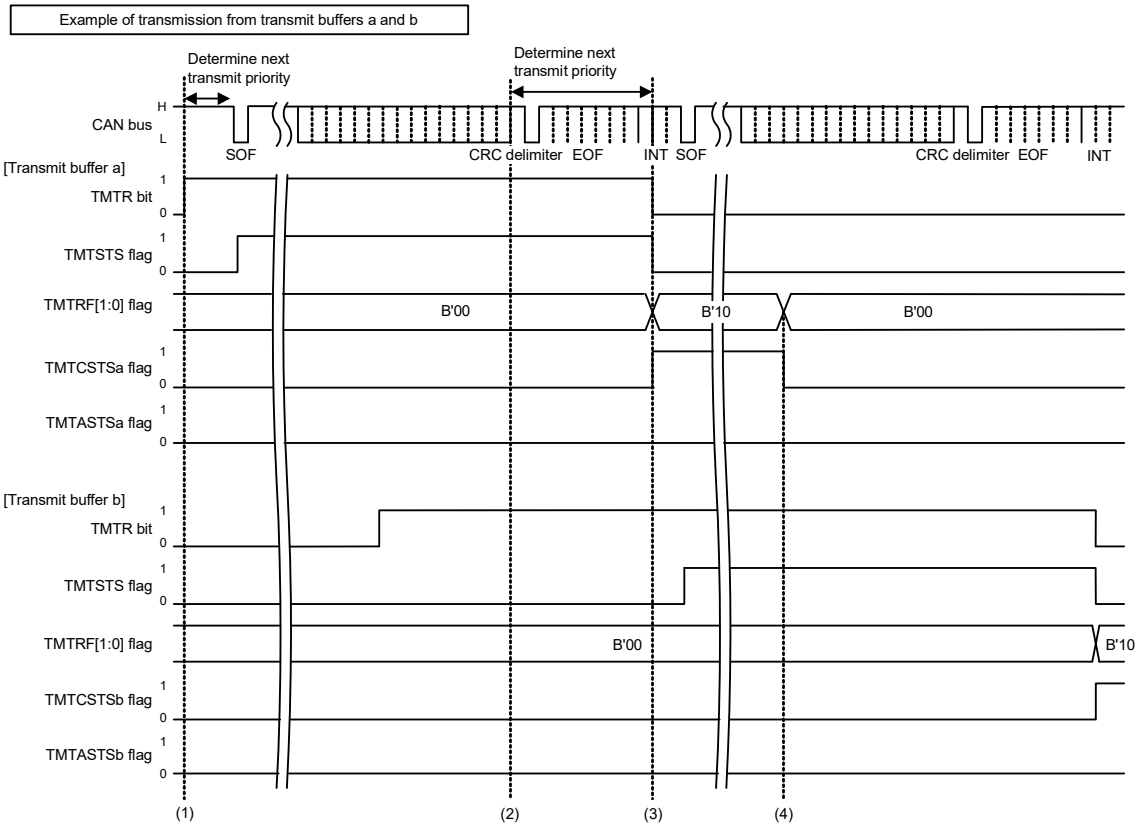

Remark a = 0 to 3, b = 0 to 3
TMTR: Bit in the TMCa or TMCb register
TMTSTS, TMTRF[1:0]: Flags in the TMSTSa or TMSTSb register
TMTCSTSa, TMTCSTSb: Flag in the TMTCSTS register
TMTASTSa, TMTASTSb: Flag in the TMTASTS register

(1) When the TMTR bit in the TMCa register is set to 1 while the CAN bus is idle, the transmit priority determination processing starts to determine the highest-priority transmit buffer. If transmit buffer a is determined to be the highest-priority transmit buffer, the TMTSTS flag in the corresponding TMSTSa register is set to 1 (transmission is in progress) and the CAN channel starts transmitting data.

(2) When a transmit request from a buffer is present, the priority determination starts with the CRC delimiter for the next transmission.

(3) When transmit completes successfully, the TMTRF[1:0] flag in the TMSTSa register is set to B'10 (transmission has been completed (without transmit abort request)), the TMTSTS flag and the TMTR bit in the TMCa register are cleared to 0, and the TMTCSTSa bit in the TMTCSTS register is set to 1. When the TMIEa value in the TMIEC register is 1 (transmit buffer interrupt is enabled), a CANi transmit interrupt request is generated. To clear the interrupt request, set the TMTRF[1:0] flag to B'00 (transmission is in progress or no transmit request is present).

(4) Before starting the next transmission, set the TMTRF[1:0] flag to B'00. Write the next message to the transmit buffer, and then set the TMTR bit to 1 (transmission is requested). The TMTR bit can be set to 1 only when the TMTRF[1:0] flag value is B'00.

If an arbitration lost has occurred after transmission is started, the TMTSTS flag is cleared to 0. The transmit priority determination is reexecuted at the beginning of the CRC delimiter to search the highest-priority transmit buffer. If an error has occurred during transmission or after arbitration lost, the priority determination processing is reexecuted during transmission of an error frame.

Figure 18-28. Transmit Buffer Transmission Timing Chart (Transmit Abort Completed)

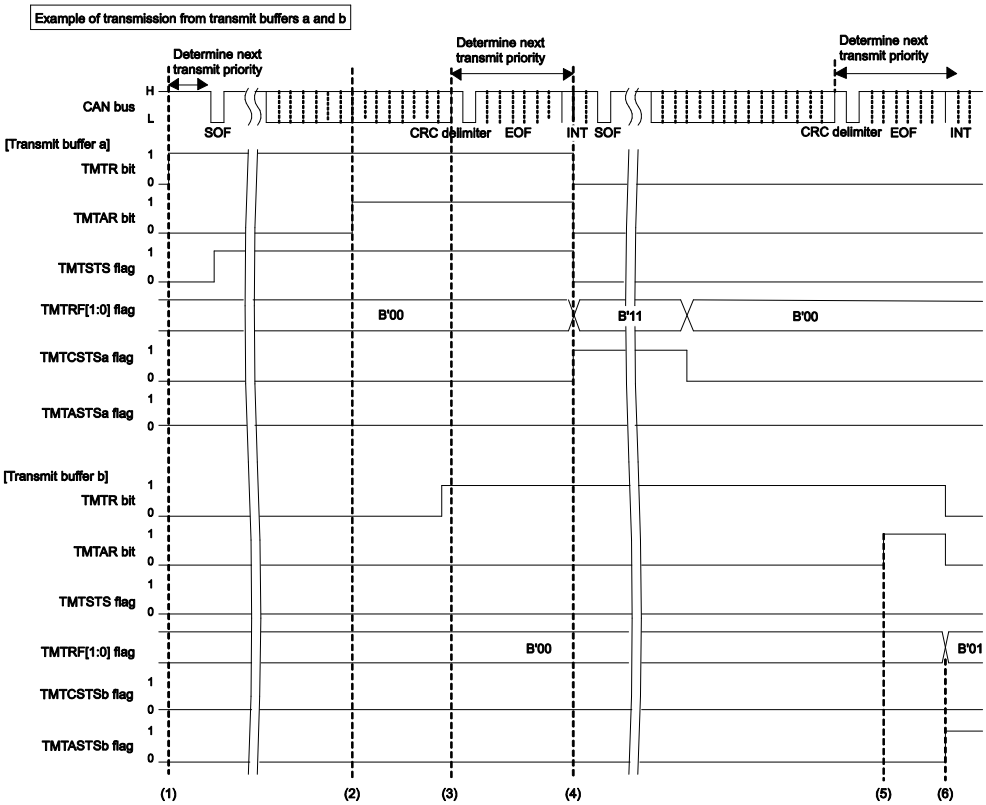

Remark a = 0 to 3, b = 0 to 3
TMTR: Bit in the TMCa or TMCb register
TMTSTS, TMTRF[1:0]: Flags in the TMSTSa or TMSTSb register
TMTCSTSa, TMTCSTSb: Flag in the TMTCSTS register
TMTASTSa, TMTASTSb: Flag in the TMTASTS register

(1) When the TMTR bit in the TMCa register is set to 1 while the CAN bus is idle, the transmit priority determination processing starts to determine the highest-priority transmit buffer. If transmit buffer a is determined to be the highest-priority transmit buffer, the TMTSTS flag in the corresponding TMSTSa register is set to 1 (transmission is in progress) and the CAN channel starts transmitting data.

(2) When it is determined that the transmit buffer is used for the next transmission or transmission is in progress, message transmission is not aborted unless an error or arbitration lost occurs even if the TMTAR bit is set to 1 (transmit abort is requested).

(3) The priority determination starts with the CRC delimiter for the next transmission. In this timing chart, buffer b is not selected as the next transmit buffer.

(4) When transmit completes successfully, the TMTRF[1:0] flag in the TMSTSa register is set to B'11 (transmission has been completed (with transmit abort request)), the TMTSTS flag and the TMTR bit in the TMCa register are cleared to 0, and the TMTCSTSa bit in the TMTCSTS register is set to 1. When the TMIEa value in the TMIEC register is 1 (transmit buffer interrupt is enabled), a CANi transmit interrupt request is generated. To clear the interrupt request, set the TMTRF[1:0] flag to B'00 (transmission is in progress or no transmit request is present).

(5) While another CAN node is transmitting data on the CAN bus (TMTSTS flag = 0), if the TMTAR bit is set to 1 while the corresponding channel is determining transmit priority, the TMTR bit cannot be cleared to 0.

(6) After the internal processing time has passed, the transmission is terminated and the TMTRF[1:0] flag is set to B'01 and the TMTASTSb bit in the TMTASTS register is set to 1. When the transmit buffer is not transmitting data and is not selected as the next transmit buffer and priority determination is not being made, an abort request is immediately accepted and the TMTRF[1:0] flag is set to B'01. At this time, the TMTR and TMTAR bits are cleared to 0. When transmit abort is completed with the TAIE bit in the CiCTRH register set to 1 (transmit abort interrupt is enabled), an interrupt request is generated. To clear the interrupt request, set the TMTRF[1:0] flag to B'00.

If an arbitration lost has occurred after the CAN channel started transmission, the TMTSTS bit is cleared to 0. The transmit priority determination is reexecuted at the beginning of the CRC delimiter to search the highest-priority transmit buffer. If an error has occurred during transmission or after arbitration lost, the priority determination processing is reexecuted during transmission of an error frame.

18.12.2 Procedure for Transmission from Transmit/Receive FIFO Buffers

Figure 18-29 shows the procedure for transmission from transmit/receive FIFO buffers.

Figure 18-30 shows a timing chart where messages are transmitted from the transmit/receive FIFO buffers and transmission has been successfully completed. Figure 18-31 shows a timing chart where messages are transmitted from the transmit/receive FIFO buffers and transmit abort has been completed.

Figure 18-29. Procedure for Transmission from Transmit/Receive FIFO Buffers

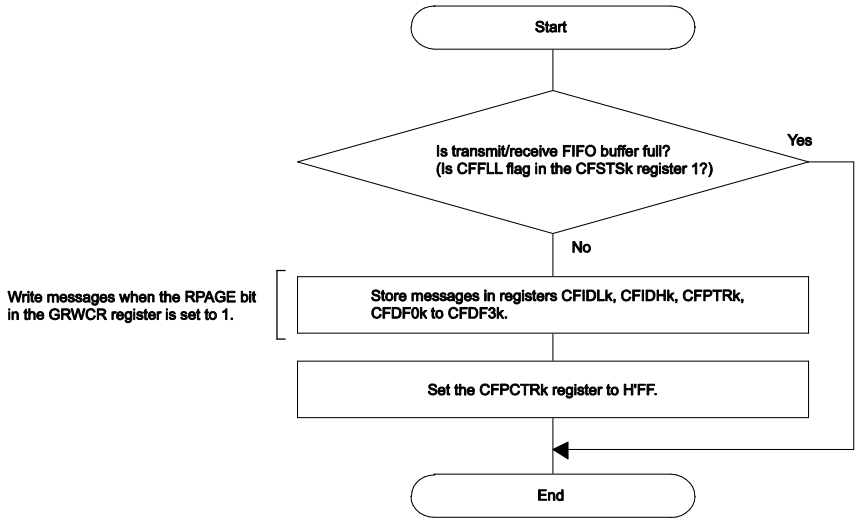

Remark k = 0

Figure 18-30. Transmit/Receive FIFO Buffer Transmission Timing Chart (Transmission Completed Successfully)

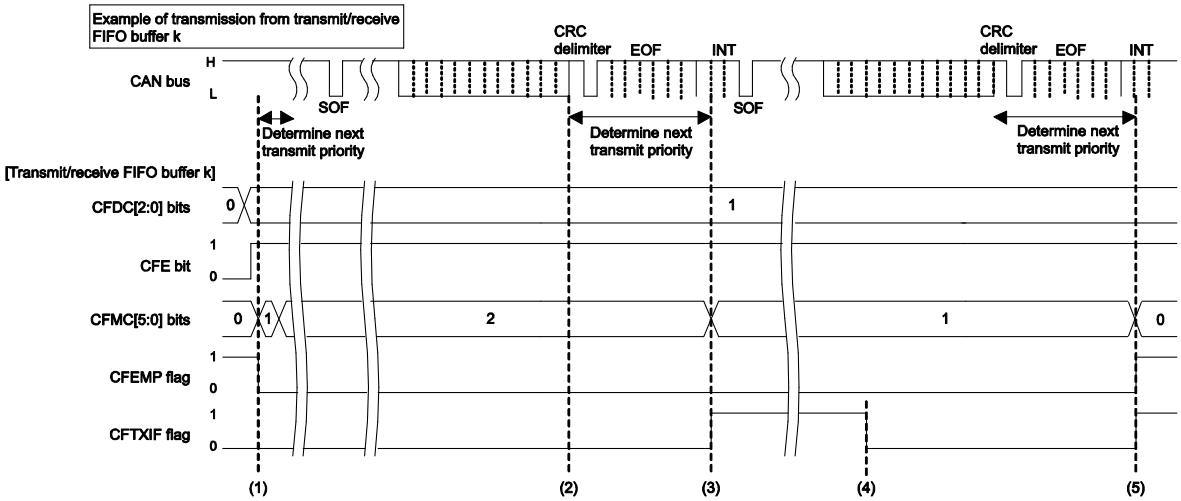

Remark k = 0
CFDC[2:0], CFE: Bits in the CFCCLk register
CFMC[5:0], CFEMP, CFTXIF: Flags in the CFSTSk register

(1) While the CAN bus is idle, when the CFE value in the CFCCLk register is 1 (transmit/receive FIFO buffer k is used) and the CFDC[2:0] value in the CFCCLk register is B'001 (4 messages) or more and the CFMC[5:0] value in the CFSTSk register is H'01 or more, the priority determination processing starts to determine the highest-priority transmit message. When the highest-priority transmit message has been determined, transmission of the message starts.
(2) When a transmit request from a buffer is present, the priority determination starts with the CRC delimiter for the next transmission.
(3) When transmit completes successfully, the CFMC[5:0] value in the CFSTSk register is decremented. Setting the CFIM bit in the CFCCLk register to 1 (a FIFO transmit interrupt request is generated each time a message has been transmitted) sets the CFTXIF flag in the CFSTSk register to 1 (a transmit/receive FIFO transmit interrupt request is present).
(4) The CFTXIF flag can be cleared by the program.
(5) Message transmission from transmit/receive FIFO buffer k has been completed and the CFMC[5:0] value in the CFSTSk register is decremented. The CFMC[5:0] bits are cleared to H'00 and therefore the CFEMP flag in the CFSTSk register is set to 1 (the transmit/receive FIFO buffer contains no message (buffer empty)).

Transmission is continued until the CFEMP flag is set to 1. It is possible to continuously store transmit messages in FIFO buffers until the CFFLL flag in the CFSTSk register is set to 1 (the transmit/receive FIFO buffer is full).

Figure 18-31. Transmit/Receive FIFO Buffer Transmission Timing Chart (Transmit Abort Completed)

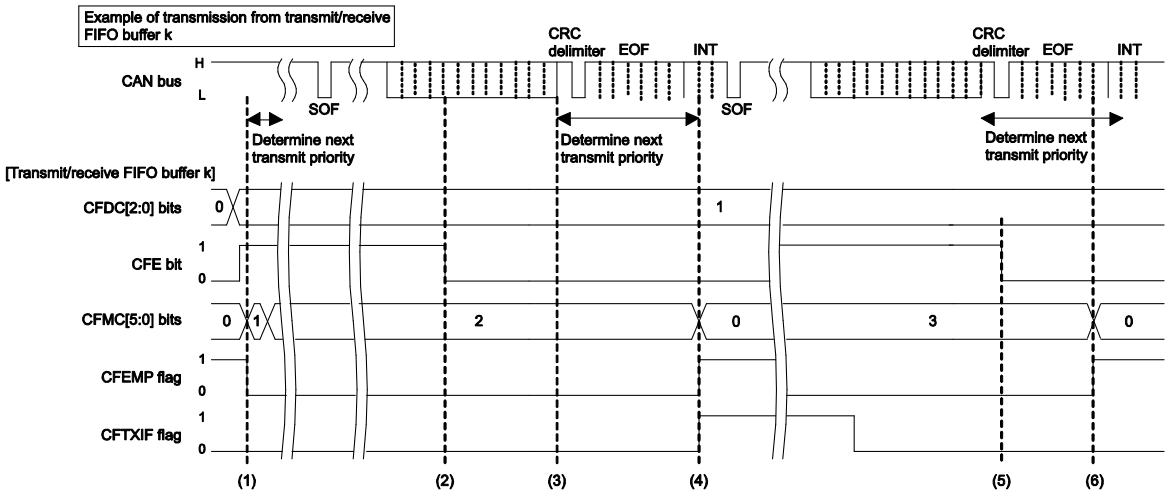

Remark k = 0
CFDC[2:0], CFE: Bits in the CFCCLk register
CFMC[5:0], CFEMP, CFTXIF: Flags in the CFSTSk register

(1) While the CAN bus is idle, when the CFE value in the CFCCLk register is 1 (transmit/receive FIFO buffer k is used) and the CFDC[2:0] value in the CFCCLk register is B'001 (4 messages) or more and the CFMC[5:0] value in the CFSTSk register is H'01 or more, the priority determination processing starts to determine the highest-priority transmit message. When the highest-priority transmit message has been determined, transmission of the message starts.
(2) When transmission is in progress or it is determined that the transmit/receive FIFO buffer is used for the next transmission, message transmission is not aborted unless an error or arbitration lost occurs even if the CFE bit is set to 0 (no transmit/receive FIFO buffer k is used).
(3) When a transmit request from a buffer is present, the priority determination starts with the CRC delimiter for the next transmission. In this figure, transmit/receive FIFO buffer k is not selected as a buffer for the next transmission.

(4) When transmit completes successfully, the CFMC[5:0] value is cleared to H'00. Setting the CFIM bit to 1 (a FIFO transmit interrupt request is generated each time a message has been transmitted) sets the CFTXIF flag in the CFSTSk register to 1 (a transmit/receive FIFO transmit interrupt request is present). The CFTXIF flag can be cleared by the program.

(5) If another CAN node on the CAN bus is transmitting data (not from transmit/receive FIFO buffer k), transmit/receive FIFO buffer k cannot be disabled immediately even if the CFE bit in the CFCCLk register is cleared to 0 (no transmit/receive FIFO buffer k is used) during transmit priority determination. (The CFEMP flag in the CFSTSk register is not set to 1 (the transmit/receive FIFO buffer contains no message (buffer empty)) immediately.)

(6) After the internal processing time has passed, transmit/receive FIFO buffers are disabled and the CFMC[5:0] bits in the CFSTSk register are cleared to H'00 and the CFEMP flag is set to 1. When the transmit/receive FIFO buffer k is not transmitting data and is not selected as the next transmit buffer and priority determination is not in progress, the transmit/receive FIFO buffer k is immediately disabled. (The CFMC[5:0] bits are cleared to H'00 and the CFEMP flag is set to 1.)

18.12.3 Transmit History Buffer Reading Procedure

Transmit history data can be read from the THLACCi register. The next data can be accessed by writing H'FF to the corresponding THLPCTRi register after reading a set of data. Figure 18-32 shows the transmit history buffer reading procedure.

Figure 18-32. Transmit History Buffer Reading Procedure

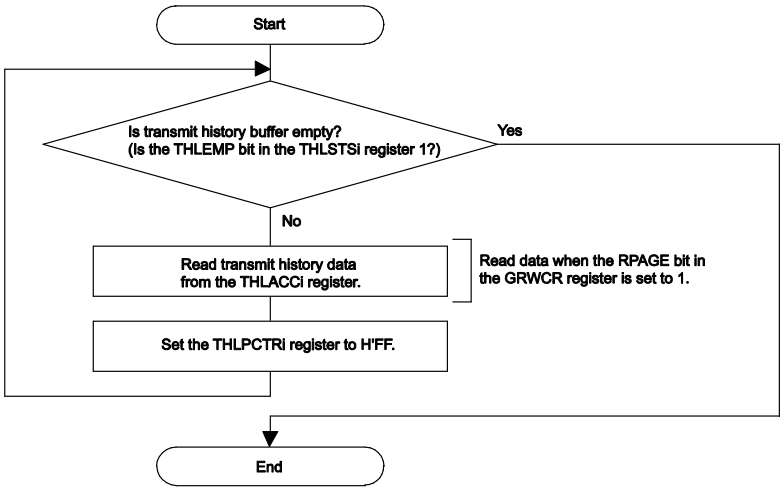

Remark i = 0

18.13 Test Settings

18.13.1 Self-Test Mode Setting Procedure

Self-test mode allows communication test on a channel basis by receiving messages transmitted from the own node. Figure 18-33 shows the self-test mode setting procedure.

Figure 18-33. Self-Test Mode Setting Procedure

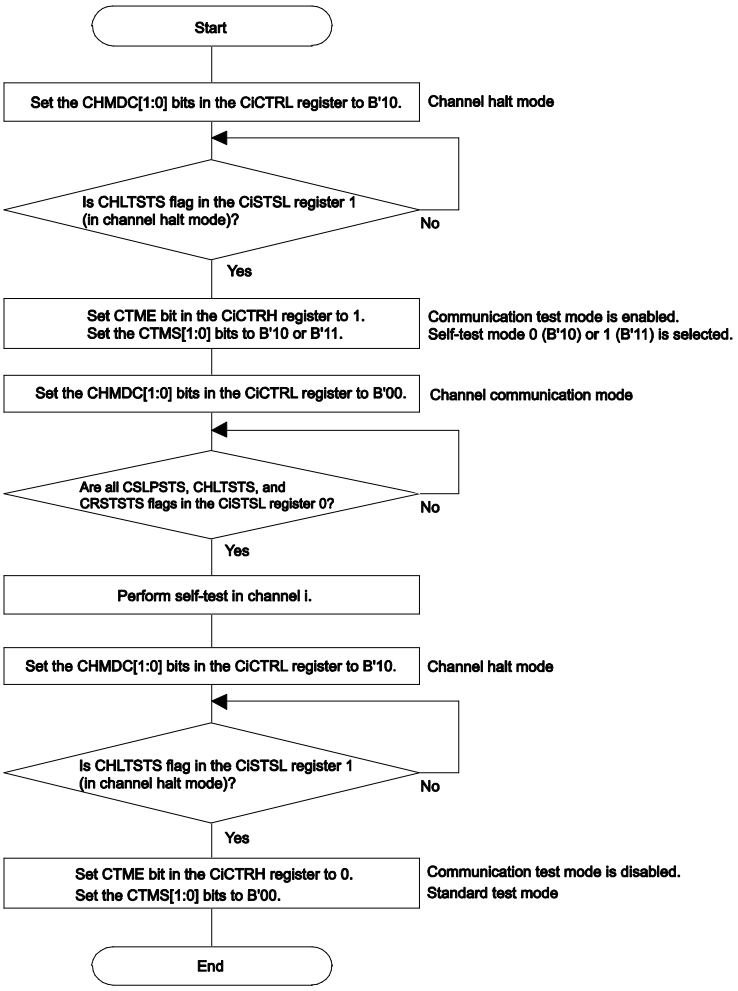

Remark i = 0

18.13.2 Protection Unlock Procedure

Since the global test functions shown in Table 18-15 are protected, write unlock data 1 and unlock data 2 in succession to the LOCK[15:0] bits in the GLOCKK register, and then set each test function bit to 1.

Table 18-15. Protection Unlock Data for Test Functions

Test Function	Protection Unlock Data 1	Protection Unlock Data 2	Target Bit
RAM test	H'7575	H'8A8A	RTME bit in the GTSTCTRL register

If an incorrect value has been written to the LOCK[15:0] bits, retry the procedure above from writing of unlock data 1.

Figure 18-34 shows the protection unlock procedure.

Figure 18-34. Protection Unlock Procedure

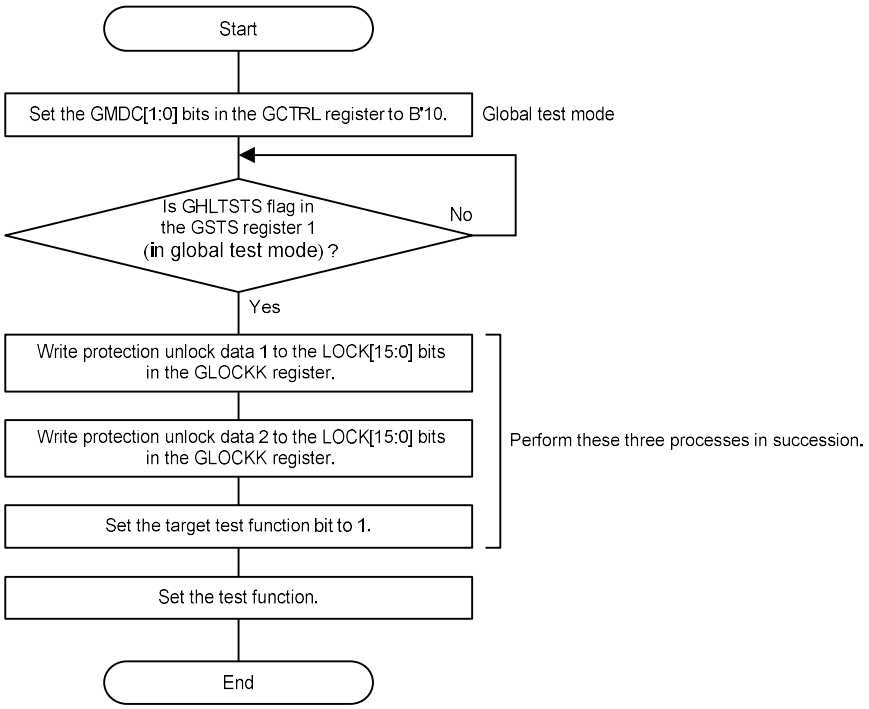

18.13.3 RAM Test Setting Procedure

RAM tests include CAN RAM read/write test. The read/write test verifies that data written to the RAM is read correctly. Before closing the RAM test, write H'0000 to all pages of the CAN RAM.

Figure 18-35 shows the RAM test setting procedure.

Figure 18-35. RAM Test Setting Procedure

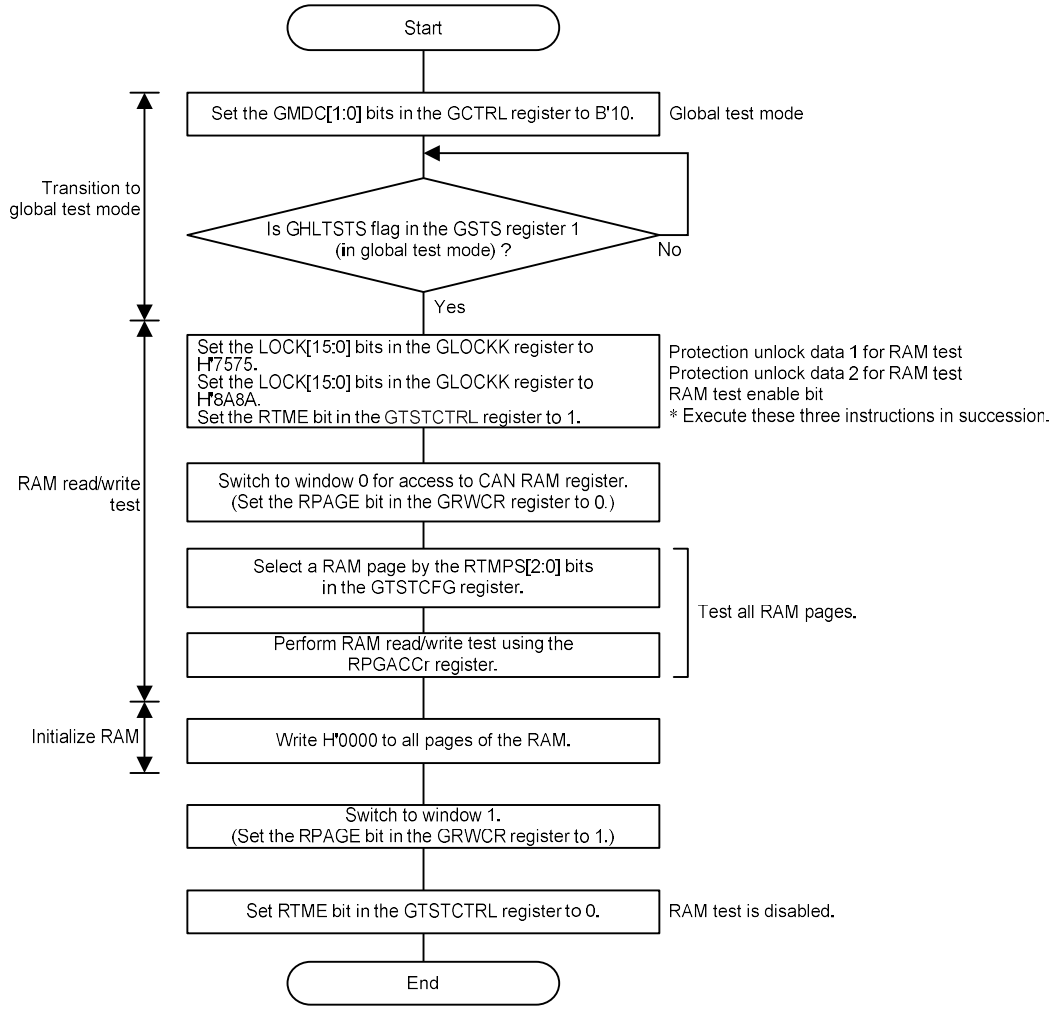

Remark r = 0 to 127

18.14 Notes on the CAN Module

- When changing a global mode, check the GSLPSTS, GHLTSTS, and GRSTSTS flags in the GSTS register for transitions. When changing a channel mode, check the CSLPSTS, CHLTSTS, and CRSTSTS flags in the CiSTSL register for transitions.
- The acceptance filter processing checks receive rules sequentially in ascending order from the minimum rule number. If the same ID, IDE bit, or RTR bit value is set for multiple receive rules, the minimum number of receive rule is used for the acceptance filter processing. If the message does not pass through the subsequent DLC filter processing, the data processing is terminated without returning to the acceptance filter processing and the message is not stored in the buffer.
- <R> When linking transmit buffers to transmit/receive FIFO buffers, set the control register (TMCp) of the corresponding transmit buffer to H'00. The status register (TMSTSp) of the corresponding transmit buffer should not be used. Flags in other status registers (registers TMTRSTS, TMTCSTS, and TMTASTS), which correspond to transmit buffers linked to transmit/receive FIFO buffers remain unchanged. Set the enable bit in the corresponding interrupt enable register (the TMIEC register) to 0 (transmit buffer interrupt is disabled).
- When the CANi bit time clock is selected as a timestamp counter clock source, the timestamp counter stops when the corresponding channel has transitioned to channel reset mode or channel halt mode.
- In case of an attempt to store a new receive message when the receive FIFO buffer and the transmit/receive FIFO buffer are full, the new message is discarded. If you wish to store a new transmit message in the transmit/receive FIFO buffer, check that the transmit/receive FIFO buffer is not full.
- Since an interrupt request flag in the CAN module is not automatically cleared to 0 when an interrupt is accepted, the flags must be cleared to 0 by software. After the corresponding interrupt request flag has been set to 1, an interrupt is not generated even if an interrupt source condition is satisfied.

<R>

Figure 18-36. Notes on the CAN Module

When using interrupts, make sure that all request flags in the CAN module corresponding to Interrupt factors are “0”responsible.

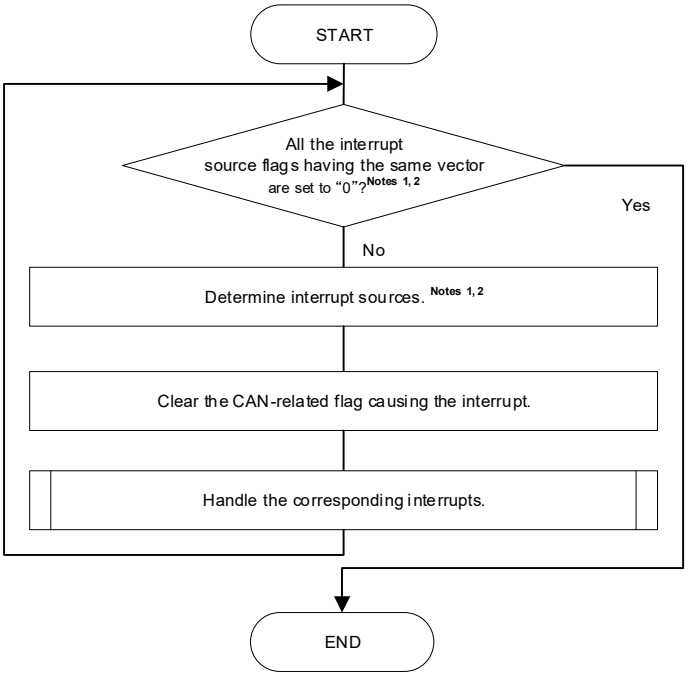

Notes 1. Before finishing the interrupt handling, make sure that interrupt request flags of the CAN module corresponding to the interrupt source have all been cleared (set to 0).
eg) If only the receiving FIFO buffer 0 is enabled (the RFIE flag of the RFCC0 register is 1) and the receive FIFO interrupt is used, set the RFIF flag of the RFSTS0 register to 0 within the interrupt handling.
After that, confirm that the RFIF flag of the RFSTS0 register has reached "0" and end the interrupt handling.
2. The CANi wakeup interrupt request flag does not exist in CAN module, because the interrupt function controls CANi wakeup interrupt.

- In order to generate the CAN related interrupt that several interrupt sources are gathered, the following condition should be met:
  All interrupt request flags corresponding to these interrupt sources in the CAN module are set to 0 (note that this only applies to those interrupt request flags for which the corresponding interrupt enable bits shown in Table 18-12 are set to 1).
- The values of unused CAN receive buffer registers (RMIDLn, RMIDHn, RMTSn, RMPTRn, and RMDF0n to RMDF3n), CAN receive FIFO access registers (RFIDLm, RFIDHm, RFTSm, RFPTRm, and RFDF0m to RFDF3m), and CANi transmit/receive FIFO access registers (CFIDLk, CFIDHk, CFTSk, CFPTRk, and CFDF0k to CFDF3k) become undefined once the CAN module exits from global reset mode and enters global operation mode or global test mode.

CHAPTER 19 DTC

The DTC (data transfer controller) is a function that transfers data between memories without using the CPU. The DTC is activated by a peripheral function interrupt to perform data transfers. The DTC and CPU use the same bus, and the DTC takes priority over the CPU in using the bus.

To control DTC data transfers, control data comprised of a transfer source address, a transfer destination address, and operating modes are allocated in the DTC control data area. Each time the DTC is activated, the DTC reads control data to perform data transfers. The DTC control data area is allocated in the RAM space set by the DTCBAR register.

The high-speed transfer is realized by allocating the dedicated control data in the SFR area instead of the RAM area.

19.1 Overview

Table 19-1 lists the DTC specifications.

Table 19-1. DTC Specifications

Item		Specification
Activation sources		44 sources max.
Allocatable control data		24 sets/2 sets (high-speed transfer)
Address space which can be transferred	Address space	64 Kbytes (F0000H to FFFFFH), excluding general-purpose registers
	Sources Note 2	1st SFR area, RAM area (excluding general-purpose registers), mirror area Note 1, data flash memory area Note 1, 2nd SFR area
	Destinations	1st SFR area, RAM area (excluding general-purpose registers), 2nd SFR area
Maximum number of transfers	Normal mode	256 times
	Repeat mode	255 times
Maximum size of block to be transferred	Normal mode (8-bit transfer)	256 bytes/1 byte (high-speed transfer)
	Normal mode (16-bit transfer)	512 bytes/2 bytes (high-speed transfer)
	Repeat mode	255 bytes/1 byte at 8-bit transfer (high-speed transfer)/2 bytes at 16-bit transfer (high-speed transfer)
Unit of transfers		8 bits/16 bits
Transfer mode	Normal mode	Transfers end on completion of the transfer causing the DTCCTj and HDTCCTm registers value to change from 1 to 0.
	Repeat mode	On completion of the transfer causing the values of the DTCCTj and HDTCCTm registers to change from 1 to 0, the repeat area address is initialized and the DTRLDj register value is reloaded to the DTCCTj and HDTCCTm registers to continue transfers.
Address control	Normal mode	Fixed or incremented
	Repeat mode	Addresses of the area not selected as the repeat area are fixed or incremented.
Priority of activation sources		Refer to **Table 19-5 DTC Activation Sources and DTC Vector Addresses**.
Interrupt request	Normal mode	When the data transfer causing the DTCCTj and HDTCCTm registers value to change from 1 to 0 is performed, the activation source interrupt request is generated for the CPU, and interrupt handling is performed on completion of the data transfer.
	Repeat mode	When the data transfer causing the values of the DTCCTj and HDTCCTm registers to change from 1 to 0 is performed while the RPTINT and HRPTINTm bits in the DTCCRj and HDTCCRm registers, respectively are 1 (interrupt generation enabled), the activation source interrupt request is generated for the CPU, and interrupt handling is performed on completion of the transfer.
Transfer start		When bits DTCENi0 to DTCENi7 in the DTCENi registers are 1 (activation enabled), data transfer is started each time the corresponding DTC activation sources are generated.
Transfer stop	Normal mode	• When bits DTCENi0 to DTCENi7 are set to 0 (activation disabled). • When the data transfer causing the DTCCTj and HDTCCTm registers value to change from 1 to 0 is completed.
	Repeat mode	• When bits DTCENi0 to DTCENi7 are set to 0 (activation disabled). • When the data transfer causing the values of the DTCCTj and HDTCCTm registers to change from 1 to 0 is completed while the RPTINT bit is 1 (interrupt generation enabled).
Operation in standby mode	HALT state	DTC operates
	SNOOZE state	DTC operates
	STOP state	DTC stops

Notes 1. In the HALT, STOP, and SNOOZE modes, these areas cannot be set as the sources for DTC transfer since the flash memory is stopped.

2. High-speed transfer is enabled only for the 1st SFR area and the 2nd SFR area.

Remark Products of groups A, B, C, and D: i = 0 to 4, j = 0 to 23, m = 0, 1

Products of group E: i = 0 to 5, j = 0 to 23, m = 0, 1

Figure 19-1. DTC Block Diagram

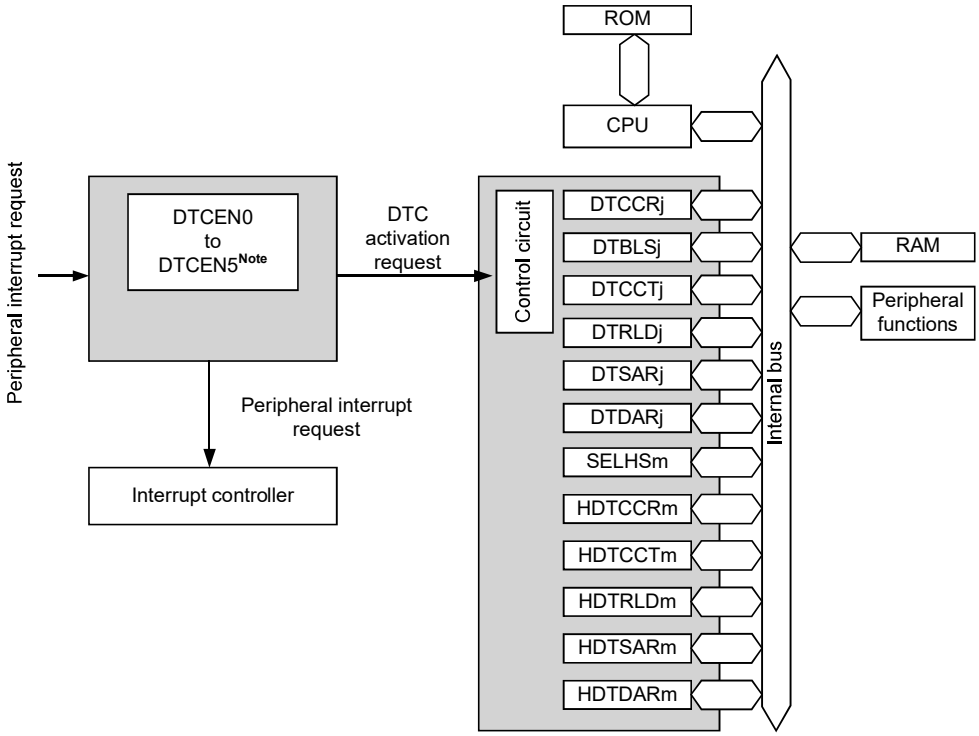

Note Products of groups A, B, C, and D do not have the DTCEN5 register.

Remark j = 0 to 23, m = 0, 1

DTCCRj: DTC control register j
DTBLSj: DTC block size register j
DTCCTj: DTC transfer count register j
DTRLDj: DTC transfer count reload register j
DTSARj: DTC source address register j
DTDARj: DTC destination address register j
DTCEN0 to DTCEN5Note: DTC activation enable registers 0 to 5Note
SELHSm: High-speed DTC channel select register m
HDTCCRm: High-speed DTC control register m
HDTCCTm: High-speed DTC transfer count register m
HDTRLDm: High-speed DTC transfer count reload register m
HDTSARm: High-speed DTC source address register m
HDTDARm: High-speed DTC destination address register m

19.2 Registers

Tables 19-2 and 19-4 list the DTC register configuration.

Table 19-2. DTC Register Configuration (1)

Register Name	Symbol	After Reset	Address	Access Size
Peripheral Enable Register 1	PER1	00H	F02C0H	1, 8
DTC Activation Enable Register 0	DTCEN0	00H	F02E8H	1, 8
DTC Activation Enable Register 1	DTCEN1	00H	F02E9H	1, 8
DTC Activation Enable Register 2	DTCEN2	00H	F02EAH	1, 8
DTC Activation Enable Register 3	DTCEN3	00H	F02EBH	1, 8
DTC Activation Enable Register 4	DTCEN4	00H	F02ECH	1, 8
DTC Activation Enable Register 5 Note	DTCEN5	00H	F02EDH	1, 8
DTC Base Address Register	DTCBAR	FDH	F02E0H	8

Note Only in products of group E.

Table 19-3 lists DTC control data.

DTC control data is allocated in the DTC control data area in RAM.

The DTCBAR register is used to set the 256-byte area, including the DTC control data area and the DTC vector table area where the start address for control data is stored.

Table 19-3. DTC Control Data

Register Name	Symbol
DTC Control Register j	DTCCRj
DTC Block Size Register j	DTBLSj
DTC Transfer Count Register j	DTCCTj
DTC Transfer Count Reload Register j	DTRLDj
DTC Source Address Register j	DTSARj
DTC Destination Address Register j	DTDARj

Remark j = 0 to 23

Table 19-4. DTC Register Configuration (2)

Register Name	Symbol	After Reset	Address	Access Size
High-speed DTC Channel Select Register 0	SELHS0	3FH	F02E1H	1, 8
High-speed DTC Channel Select Register 1	SELHS1	3FH	F02E2H	1, 8
High-speed DTC Control Register 0	HDTCCR0	00H	F02D0H	1, 8
High-speed DTC Transfer Count Register 0	HDTCCT0	00H	F02D2H	1, 8
High-speed DTC Transfer Count Reload Register 0	HDTRLD0	00H	F02D3H	1, 8
High-speed DTC Source Address Register 0	HDTSAR0	00H	F02D4H, F02D5H	16
High-speed DTC Destination Address Register 0	HDTDAR0	00H	F02D6H, F02D7H	16
High-speed DTC Control Register 1	HDTCCR1	00H	F02D8H	1, 8
High-speed DTC Transfer Count Register 1	HDTCCT1	00H	F02DAH	1, 8
High-speed DTC Transfer Count Reload Register 1	HDTRLD1	00H	F02DBH	1, 8
High-speed DTC Source Address Register 1	HDTSAR1	00H	F02DCH, F02DDH	16
High-speed DTC Destination Address Register 1	HDTDAR1	00H	F02DEH, F02DFH	16

19.2.1 Allocation of DTC Control Data Area and DTC Vector Table Area

The DTCBAR register is used to set the 256-byte area where DTC control data and the vector table within the RAM area. Figure 19-2 shows a memory map example when DTCBAR register is set to FBH.

In the 192-byte DTC control data area, the space not used by the DTC can be used as RAM.

Figure 19-2. Memory Map Example when DTCBAR Register is Set to FBH

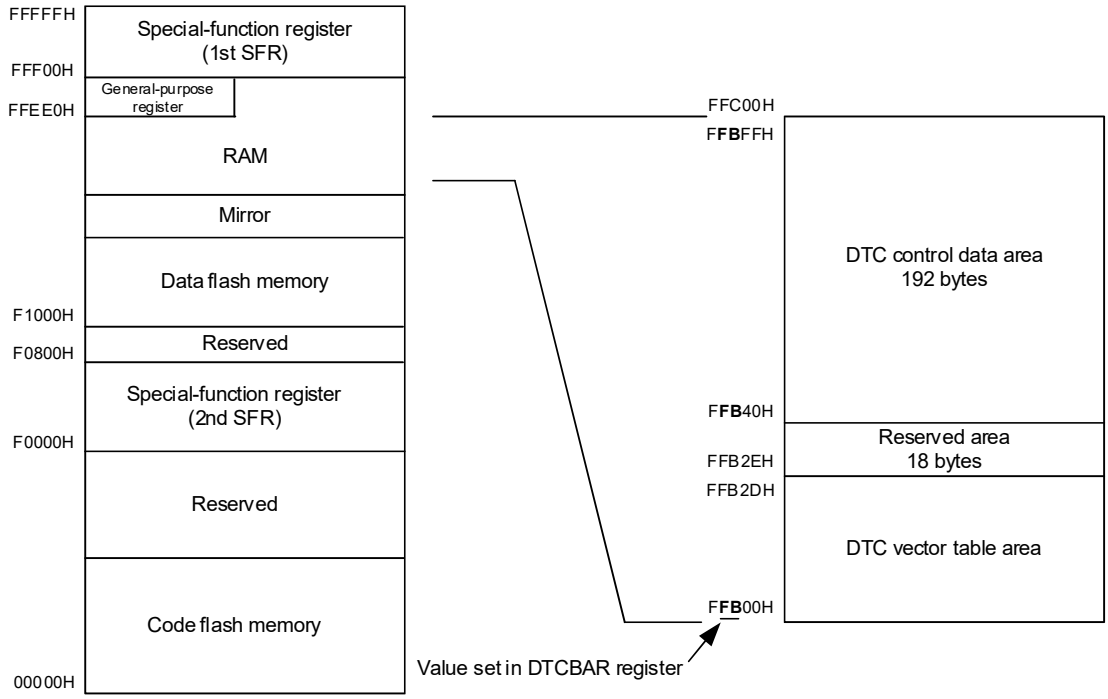

<R>

The areas where the DTC control data and vector table can be allocated differ depending on the usage conditions.

Cautions 1. It is prohibited to use the general-purpose register (FFF00H to FFEE0H) space as the DTC control data area or DTC vector table area.

2. The 18-byte area between the DTC vector table area and the DTC control data area is reserved for use when the number of DTC activation sources is expanded.

3. The internal RAM area in the following products cannot be used as the DTC control data area or DTC vector table area when using the self-programming function and data flash function.

R5F10AmE (m = 6, A, B, G, L)	**: FEF00H to FF2FFH**
R5F10PmF (m = G, L, M)	**: FDF00H to FE2FFH**
R5F10AmG (m = G, L, M), R5F10BnG (n = A, B, G, L, M)	**: FDF00H to FE2FFH**
R5F10PmJ (m = G, L, M, P)	**: FAF00H to FB2FFH**

4. The internal RAM area in the following products cannot be used as the DTC control data area or DTC vector table area when using the tracing function of on-chip debugging.

R5F10AmE (m = 6, A, B, G, L), R5F10AnD (n = 6, A, B, G, L)	**: FF300H to FF37FH**
R5F10AmG (m = G, L, M), R5F10BnG (n = A, B, G, L, M)	**: FE300H to FE4FFH**
R5F10PmF (m = G, L, M)	**: FE300H to FE4FFH**
R5F10PmJ (m = G, L, M, P)	**: FB300H to FB4FFH**

5. The internal RAM in the following products cannot be used as stack memory when the hot plug-in function is used or when the DTC is in use for the RRM or DMM function.

R5F10AmD, R5F10AmE (m = 6, A, B, G, L)	**: FF400H to FF42FH**
R5F10AmG (m = G, L, M), R5F10BnG (n = A, B, G, L, M)	**: FE500H to FE52FH**
R5F10PmF (m = G, L, M)	**: FE500H to FE52FH**
R5F10PmJ (m = G, L, M, P)	**: FB500H to FB52FH**

19.2.2 DTC Control Data Allocation

Control data is allocated beginning with each start address in the order: Registers DTCCRj, DTBLSj, DTCCTj, DTRLDj, DTSARj, and DTDARj (j = 0 to 23).

The higher 8 bits for start addresses 0 to 23 are set by the DTCBAR register, and the lower 8 bits are separately set according to the vector table assigned to each activation source.

Figure 19-3 shows an example of DTC control data allocation when the DTCBAR register is set to FBH.

Cautions

- Change the data in registers DTCCRj, DTBLSj, DTCCTj, DTRLDj, DTSARj, and DTDARj when the corresponding bit among bits DTCENi0 to DTCENi7 (i = 0 to 5[Note]) in the DTCENi register is set to 0 (DTC activation disabled).
- Do not access DTCCRj, DTBLSj, DTCCTj, DTRLDj, DTSARj, or DTDARj using a DTC transfer.

Note Products of groups A, B, C, and D: i = 0 to 4
Products of group E: i = 0 to 5

Figure 19-3. DTC Control Data Allocation

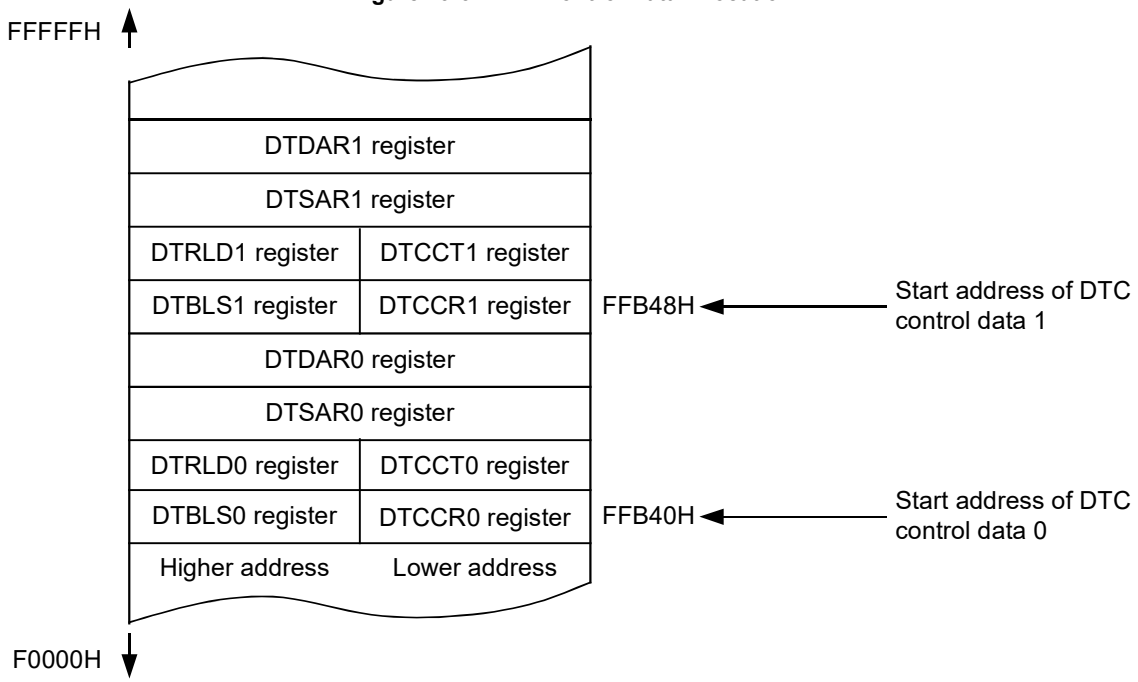

19.2.3 DTC Vector Table

When the DTC is activated, one control data is selected according to the data read from the vector table which has been assigned to each activation source, and the selected control data is read from the DTC control data area.

Table 19-5 lists the DTC activation sources and DTC vector addresses. A one byte of the DTC vector table is assigned to each activation source, and the lower 8 bits for the start address of the DTC control data are stored in each area to select one of the 24 sets. The higher 8 bits for the DTC vector address are set by the DTCBAR register, and 00H to 2DH are allocated to the lower 8 bits corresponding to the DTC activation source.

Caution

- Change the start address of the DTC control data area to be set in the vector table when the corresponding bit among bits DTCENi0 to DTCENi7 (i = 0 to 5[Note]) in the DTCENi register is set to 0 (DTC activation disabled).

Note Products of groups A, B, C, and D: i = 0 to 4
Products of group E: i = 0 to 5

Table 19-5. DTC Activation Sources and DTC Vector Addresses (1/2)

Interrupt Request Source	Source No.	DTC Vector Address	Priority
Reserved	0	Address set in DTCBAR register +00H	Highest
INTP0	1	Address set in DTCBAR register +01H	↑
INTP1	2	Address set in DTCBAR register +02H	
INTP2	3	Address set in DTCBAR register +03H	
INTP3	4	Address set in DTCBAR register +04H	
INTP4	5	Address set in DTCBAR register +05H	
INTP5 Note 1	6	Address set in DTCBAR register +06H	
INTP6 Notes 1, 2	7	Address set in DTCBAR register +07H	
Key input	8	Address set in DTCBAR register +08H	
A/D conversion end	9	Address set in DTCBAR register +09H	
UART0 reception transfer end/CSI01 transfer end or buffer empty/IIC01 transfer end	10	Address set in DTCBAR register +0AH	
UART0 transmission transfer end/CSI00 transfer end or buffer empty/IIC00 transfer end	11	Address set in DTCBAR register +0BH	
UART1 reception transfer end/CSI11 transfer end or buffer empty/IIC11 transfer end Notes 3, 4	12	Address set in DTCBAR register +0CH	
UART1 transmission transfer end/CSI10 transfer end or buffer empty/IIC10 transfer end Note 3	13	Address set in DTCBAR register +0DH	
LIN0 reception end	14	Address set in DTCBAR register +0EH	
LIN0 transmission start/end	15	Address set in DTCBAR register +0FH	
CAN reception end Note 5	16	Address set in DTCBAR register +10H	
Reserved	17	Address set in DTCBAR register +11H	
End of channel 0 of timer array unit 0 count or capture	18	Address set in DTCBAR register +12H	
End of channel 1 of timer array unit 0 count or capture	19	Address set in DTCBAR register +13H	
End of channel 2 of timer array unit 0 count or capture	20	Address set in DTCBAR register +14H	
End of channel 3 of timer array unit 0 count or capture	21	Address set in DTCBAR register +15H	
End of channel 4 of timer array unit 0 count or capture	22	Address set in DTCBAR register +16H	
End of channel 5 of timer array unit 0 count or capture	23	Address set in DTCBAR register +17H	
End of channel 6 of timer array unit 0 count or capture	24	Address set in DTCBAR register +18H	
End of channel 7 of timer array unit 0 count or capture	25	Address set in DTCBAR register +19H	

(**Notes** and **Remark** are listed on the next page.)

Remark Group A: RL78/F13 (LIN incorporated) products with 20, 30, 32, 48, or 64 pins and 16 Kbytes to 64 Kbytes of code flash memory

Group B: RL78/F13 (LIN incorporated) products with 48 or 64 pins and 96 Kbytes to 128 Kbytes of code flash memory or with 80 pins and 64 Kbytes to 128 Kbytes of code flash memory

Group C: RL78/F13 (LIN and CAN incorporated) products with 30, 32, 48, 64, or 80 pins and 32 Kbytes to 128 Kbytes of code flash memory

Group D: RL78/F14 products with 30, 32, 48, 64, or 80 pins and 48 Kbytes to 96 Kbytes of code flash memory

<R> Group E: RL78/F14 products with 48, 64 or 80 pins and 128 Kbytes to 256 Kbytes of code flash memory or with 100 pins and 64 Kbytes to 256 Kbytes of code flash memory

Notes 1. Not provided in the 20-pin products.

2. Not provided in the products with 30 or 32 pins.

3. Provided only in the products of Groups B to E.

4. RL78/F13 (CAN and LIN incorporated) products with 30 or 32 pins and RL78/F14 products with 30 or 32 pins do not have CSI11 transfer end or buffer empty interrupt/IIC11 transfer end interrupt.

5. Provided only in the products of Groups C to E.

Table 19-5. DTC Activation Sources and DTC Vector Addresses (2/2)

Interrupt Request Source	Source No.	DTC Vector Address	Priority
Timer RD compare match A0	26	Address set in DTCBAR register +1AH	↓
Timer RD compare match B0	27	Address set in DTCBAR register +1BH	
Timer RD compare match C0	28	Address set in DTCBAR register +1CH	
Timer RD compare match D0	29	Address set in DTCBAR register +1DH	
Timer RD compare match A1	30	Address set in DTCBAR register +1EH	
Timer RD compare match B1	31	Address set in DTCBAR register +1FH	
Timer RD compare match C1	32	Address set in DTCBAR register +20H	
Timer RD compare match D1	33	Address set in DTCBAR register +21H	
Timer RJ0	34	Address set in DTCBAR register +22H	
Comparator detection 0 Note 1	35	Address set in DTCBAR register +23H	
End of channel 0 of timer array unit 1 count or capture Note 2	36	Address set in DTCBAR register +24H	
End of channel 1 of timer array unit 1 count or capture Note 2	37	Address set in DTCBAR register +25H	
End of channel 2 of timer array unit 1 count or capture Note 2	38	Address set in DTCBAR register +26H	
End of channel 3 of timer array unit 1 count or capture Note 2	39	Address set in DTCBAR register +27H	
LIN1 reception end Note 3	40	Address set in DTCBAR register +28H	
LIN1 transmission start/end Note 3	41	Address set in DTCBAR register +29H	
End of channel 4 of timer array unit 1 count or capture Note 3	42	Address set in DTCBAR register +2AH	
End of channel 5 of timer array unit 1 count or capture Note 3	43	Address set in DTCBAR register +2BH	
End of channel 6 of timer array unit 1 count or capture Note 3	44	Address set in DTCBAR register +2CH	
End of channel 7 of timer array unit 1 count or capture Note 3	45	Address set in DTCBAR register +2DH	Lowest

Remark Group A: RL78/F13 (LIN incorporated) products with 20, 30, 32, 48, or 64 pins and 16 Kbytes to 64 Kbytes of code flash memory

Group B: RL78/F13 (LIN incorporated) products with 48 or 64 pins and 96 Kbytes to 128 Kbytes of code flash memory or with 80 pins and 64 Kbytes to 128 Kbytes of code flash memory

Group C: RL78/F13 (LIN and CAN incorporated) products with 30, 32, 48, 64, or 80 pins and 32 Kbytes to 128 Kbytes of code flash memory

Group D: RL78/F14 products with 30, 32, 48, 64, or 80 pins and 48 Kbytes to 96 Kbytes of code flash memory

<R> Group E: RL78/F14 products with 48, 64, 80 pins and 128 Kbytes to 256 Kbytes of code flash memory or with 100 pins and 64 Kbytes to 256 Kbytes of code flash memory

Notes 1. Only in Group D and E products.

2. Only in Group B, C, D, and E products.

3. Only in Group E products.

19.2.4 Peripheral enable register 1 (PER1)

The PER1 register is used to enable or disable supplying the clock to the peripheral hardware. Clock supply to the hardware that is not used is also stopped so as to decrease the power consumption and noise.

When using the DTC, be sure to set bit 3 (DTCEN) to 1.

The PER1 register can be set by a 1-bit or 8-bit memory manipulation instruction.

Reset signal generation clears this register to 00H.

Figure 19-4. Format of Peripheral Enable Register 1 (PER1)

Address: F02C0H After reset: 00H R/W

Symbol	<7>	6	<5>	<4>	<3>	2	1	<0>
PER1	DACEN Note 1	0	CMPEN Note 1	TRD0EN Note 2	DTCEN	0	0	TRJ0EN

DTCEN	Control of DTC input clock supply
0	Stops input clock supply. • DTC cannot run.
1	Enables input clock supply. • DTC can run.

Note 1. Only in RL78/F14.

2. When FRQSEL4 = 1 in the user option byte (000C2H/020C2H), set f_{CLK} to f_{IH} before setting the bit 4 (TRD0EN) of the peripheral enable register 1 (PER1). When changing f_{CLK} to a clock other than f_{IH}, clear the bit 4 (TRD0EN) of the peripheral enable register 1 (PER1) before changing.

Caution Be sure to clear the following bits to 0.

RL78/F13: bits 1, 2, 5, 6, and 7

RL78/F14: bits 1, 2, and 6

19.2.5 DTC Activation Enable Register i (DTCENi) (i = 0 to 5)

This is an 8-bit register which enables or disables DTC activation by interrupt sources. Table 19-6 lists the correspondence between interrupt sources and bits DTCENi0 to DTCENi7.

Set the DTCENi register by an 8-bit or 1-bit memory manipulation instruction.

Notes 1. Modify bits DTCENi0 to DTCENi7 if an activation source corresponding to the bit has not been generated.

2. Do not access the DTCENi register using a DTC transfer.

Figure 19-5. DTC Activation Enable Register i (DTCENi) (i = 0 to 5)

Address: F02E8H (DTCEN0), F02E9H (DTCEN1), F02EAH (DTCEN2), F02EBH (DTCEN3), F02ECH (DTCEN4), F02EDH (DTCEN5)[Note] After reset: 00H

Symbol	<7>	<6>	<5>	<4>	<3>	<2>	<1>	<0>
DTCENi	DTCENi7	DTCENi6	DTCENi5	DTCENi4	DTCENi3	DTCENi2	DTCENi1	DTCENi0

DTCENi7	DTC activation enable i7	R/W
0	Activation disabled	R/W
1	Activation enabled	
The DTCENi7 bit is set to 0 (activation disabled) by a condition for generating a transfer end interrupt.		

DTCENi6	DTC activation enable i6	R/W
0	Activation disabled	R/W
1	Activation enabled	
The DTCENi6 bit is set to 0 (activation disabled) by a condition for generating a transfer end interrupt.		

DTCENi5	DTC activation enable i5	R/W
0	Activation disabled	R/W
1	Activation enabled	
The DTCENi5 bit is set to 0 (activation disabled) by a condition for generating a transfer end interrupt.		

DTCENi4	DTC activation enable i4	R/W
0	Activation disabled	R/W
1	Activation enabled	
The DTCENi4 bit is set to 0 (activation disabled) by a condition for generating a transfer end interrupt.		

DTCENi3	DTC activation enable i3	R/W
0	Activation disabled	R/W
1	Activation enabled	
The DTCENi3 bit is set to 0 (activation disabled) by a condition for generating a transfer end interrupt.		

(**Note** is listed on the next page.)

DTCENi2	DTC activation enable i2	R/W
0	Activation disabled	R/W
1	Activation enabled	
The DTCENi2 bit is set to 0 (activation disabled) by a condition for generating a transfer end interrupt.		

DTCENi1	DTC activation enable i1	R/W
0	Activation disabled	R/W
1	Activation enabled	
The DTCENi1 bit is set to 0 (activation disabled) by a condition for generating a transfer end interrupt.		

DTCENi0	DTC activation enable i0	R/W
0	Activation disabled	R/W
1	Activation enabled	
The DTCENi0 bit is set to 0 (activation disabled) by a condition for generating a transfer end interrupt.		

Note Only in products of group E.

Table 19-6. Correspondences between Interrupt Sources and Bits DTCENi0 to DTCENi7

Register	DTCENi7 Bit	DTCENi6 Bit	DTCENi5 Bit	DTCENi4 Bit	DTCENi3 Bit	DTCENi2 Bit	DTCENi1 Bit	DTCENi0 Bit
DTCEN 0	Reserved	INTP0	INTP1	INTP2	INTP3	INTP4	INTP5	INTP6
DTCEN 1	Key input	A/D conversion end	UART0 reception transfer end/CSI01 transfer end or buffer empty/IIC01 transfer end	UART0 transmission transfer end/CSI00 transfer end or buffer empty/IIC00 transfer end	UART1 reception transfer end/CSI11 transfer end or buffer empty/IIC11 transfer end	UART1 transmission transfer end/CSI10 transfer end or buffer empty/IIC10 transfer end	LIN0 reception end	LIN0 transmission start/transmission end
<R> DTCEN 2	CAN reception end	Reserved	End of channel 0 of timer array unit 0 count or capture	End of channel 1 of timer array unit 0 count or capture	End of channel 2 of timer array unit 0 count or capture	End of channel 3 of timer array unit 0 count or capture	End of channel 4 of timer array unit 0 count or capture	End of channel 5 of timer array unit 0 count or capture
DTCEN 3	End of channel 6 of timer array unit 0 count or capture	End of channel 7 of timer array unit 0 count or capture	Timer RD compare match A0	Timer RD compare match B0	Timer RD compare match C0	Timer RD compare match D0	Timer RD compare match A1	Timer RD compare match B1
DTCEN 4	Timer RD compare match C1	Timer RD compare match D1	Timer RJ0	Comparator detection 0	End of channel 0 of timer array unit 1 count or capture	End of channel 1 of timer array unit 1 count or capture	End of channel 2 of timer array unit 1 count or capture	End of channel 3 of timer array unit 1 count or capture
DTCEN 5 Note	LIN1 reception end	LIN1 transmission start/transmission end	End of channel 4 of timer array unit 1 count or capture	End of channel 5 of timer array unit 1 count or capture	End of channel 6 of timer array unit 1 count or capture	End of channel 7 of timer array unit 1 count or capture	Reserved	Reserved

Note Only in products of group E.

Remark i = 0 to 5

19.2.6 DTC Base Address Register (DTCBAR)

This is an 8-bit register used to set the following addresses: the vector address where the start address of the DTC control data area is stored and the address of the DTC control data area. The value of the DTCBAR register is handled as the higher 8 bits to generate a 16-bit address.

Cautions 1. Modify the DTCBAR register value with all DTC activation sources set to activation disabled.
2. Do not rewrite the DTCBAR register more than once.
3. Do not access the DTCBAR register using a DTC transfer.
4. For the allocation of the DTC control data area and the DTC vector table area, refer to the notes on 19.2.1 Allocation of DTC Control Data Area and DTC Vector Table Area.

Figure 19-6. Format of DTC Base Address Register (DTCBAR)

Address: F02E0H After reset: FDH

Symbol	7	6	5	4	3	2	1	0
DTCBAR	DTCBAR7	DTCBAR6	DTCBAR5	DTCBAR4	DTCBAR3	DTCBAR2	DTCBAR1	DTCBAR0

19.2.7 DTC Control Register j (DTCCRj) (j = 0 to 23)

The DTCCRj register is used to control the DTC operating mode.

Figure 19-7. Format of DTC Control Register j (DTCCRj)

Address: Refer to **19.2.2 DTC Control Data Allocation**. After reset: Undefined

Symbol	7	6	5	4	3	2	1	0
DTCCRj	0	SZ	RPTINT	CHNE	DAMOD	SAMOD	RPTSEL	MODE

Bit 7	Reserved	R/W
0	Set to 0.	R/W

SZ	Data size selection	R/W
0	8 bits	R/W
1	16 bits	

RPTINT	Enabling/disabling repeat mode interrupts	R/W
0	Interrupt generation disabled	R/W
1	Interrupt generation enabled	
The setting of the RPTINT bit is invalid when the MODE bit is 0 (normal mode).		

CHNE	Enabling/disabling chain transfers	R/W
0	Chain transfers disabled	R/W
1	Chain transfers enabled	
Set the CHNE bit in the DTCCR23 register to 0 (chain transfers disabled).		

DAMOD	Transfer destination address control	R/W
0	Fixed	R/W
1	Incremented	
The setting of the DAMOD bit is invalid when the MODE bit is 1 (repeat mode) and the RPTSEL bit is 0 (transfer destination is the repeat area).		

SAMOD	Transfer source address control	R/W
0	Fixed	R/W
1	Incremented	
The setting of the SAMOD bit is invalid when the MODE bit is 1 (repeat mode) and the RPTSEL bit is 1 (transfer source is the repeat area).		

RPTSEL	Repeat area selection	R/W
0	Transfer destination is the repeat area	R/W
1	Transfer source is the repeat area	
The setting of the RPTSEL bit is invalid when the MODE bit is 0 (normal mode).		

MODE	Transfer mode selection	R/W
0	Normal mode	R/W
1	Repeat mode	

Caution Do not access the DTCCRj register using a DTC transfer.

19.2.8 DTC Block Size Register j (DTBLSj) (j = 0 to 23)

This register is used to set the block size of the data to be transferred by one activation.

Figure 19-8. Format of DTC Block Size Register j (DTBLSj)

Address: Refer to **19.2.2 DTC Control Data Allocation**. After reset: Undefined

Symbol	7	6	5	4	3	2	1	0
DTBLSj	DTBLSj7	DTBLSj6	DTBLSj5	DTBLSj4	DTBLSj3	DTBLSj2	DTBLSj1	DTBLSj0

DTBLSj	Transfer Block Size		R/W
	8-Bit Transfer	16-Bit Transfer	
00H	256 bytes	512 bytes	R/W
01H	1 byte	2 bytes	
02H	2 bytes	4 bytes	
03H	3 bytes	6 bytes	
. . .	. . .	. . .	
FDH	253 bytes	506 bytes	
FEH	254 bytes	508 bytes	
FFH	255 bytes	510 bytes	

Caution Do not access the DTBLSj register using a DTC transfer.

19.2.9 DTC Transfer Count Register j (DTCCTj) (j = 0 to 23)

This register is used to set the number of DTC data transfers. The value is decremented by 1 each time DTC transfer is activated once.

Figure 19-9. Format of DTC Transfer Count Register j (DTCCTj)

Address: Refer to **19.2.2 DTC Control Data Allocation**. After reset: Undefined

Symbol	7	6	5	4	3	2	1	0
DTCCTj	DTCCTj7	DTCCTj6	DTCCTj5	DTCCTj4	DTCCTj3	DTCCTj2	DTCCTj1	DTCCTj0

DTCCTj	Number of Transfers	R/W
00H	256 times	R/W
01H	Once	
02H	2 times	
03H	3 times	
. . .	. . .	
FDH	253 times	
FEH	254 times	
FFH	255 times	

Caution Do not access the DTCCTj register using a DTC transfer.

19.2.10 DTC Transfer Count Reload Register j (DTRLDj) (j = 0 to 23)

This register is used to set the initial value of the transfer count register in repeat mode. Since the value of this register is reloaded to the DTCCT register in repeat mode, set the same value as the initial value of the DTCCT register.

Figure 19-10. Format of DTC Transfer Count Reload Register j (DTRLDj)

Address: Refer to **19.2.2 DTC Control Data Allocation**. After reset: Undefined

Symbol	7	6	5	4	3	2	1	0
DTRLDj	DTRLDj7	DTRLDj6	DTRLDj5	DTRLDj4	DTRLDj3	DTRLDj2	DTRLDj1	DTRLDj0

Caution Do not access the DTRLDj register using a DTC transfer.

19.2.11 DTC Source Address Register j (DTSARj) (j = 0 to 23)

This register is used to specify the transfer source address for data transfer.

When the SZ bit in the DTCCRj register is set to 1 (16-bit transfer), the lowest bit is ignored and the address is handled as an even address.

Figure 19-11. Format of DTC Source Address Register j (DTSARj)

Address: Refer to **19.2.2 DTC Control Data Allocation**. After reset: Undefined

	15	14	13	12	11	10	9	8	7	6	5	4	3	2	1	0
DTSARj	DTS ARj15	DTS ARj14	DTS ARj13	DTS ARj12	DTS ARj11	DTS ARj10	DTS ARj9	DTS ARj8	DTS ARj7	DTS ARj6	DTS ARj5	DTS ARj4	DTS ARj3	DTS ARj2	DTS ARj1	DTS ARj0

Cautions 1. Do not set the general-purpose register (FFEE0H to FFEFFH) space to the transfer source address.

2. Do not access the DTSARj register using a DTC transfer.

19.2.12 DTC Destination Address Register j (DTDARj) (j = 0 to 23)

This register is used to specify the transfer destination address for data transfer.

When the SZ bit in the DTCCRj register is set to 1 (16-bit transfer), the lowest bit is ignored and the address is handled as an even address.

Figure 19-12. Format of DTC Destination Address Register j (DTDARj)

Address: Refer to **19.2.2 DTC Control Data Allocation**. After reset: Undefined

	15	14	13	12	11	10	9	8	7	6	5	4	3	2	1	0
DTDARj	DTD ARj15	DTD ARj14	DTD ARj13	DTD ARj12	DTD ARj11	DTD ARj10	DTD ARj9	DTD ARj8	DTD ARj7	DTD ARj6	DTD ARj5	DTD ARj4	DTD ARj3	DTD ARj2	DTD ARj1	DTD ARj0

Cautions 1. Do not set the general-purpose register (FFEE0H to FFEFFH) space to the transfer source address.

2. Do not access the DTDARj register using a DTC transfer.

19.2.13 High-speed DTC Channel Select Register 0 (SELHS0)

<R> The SELHS0 register is an 8-bit register that is used to select the high-speed DTC channel.

Figure 19-13. Format of High-speed DTC Channel Select Register 0 (SELHS0)

Symbol	7	6	5	4	3	2	1	0
SELHS0	0	0	SELHS05	SELHS04	SELHS03	SELHS02	SELHS01	SELHS00

The SELHS0 register can be set with an 8-bit or 1-bit memory manipulation instruction, not set with a 16-bit memory manipulation instruction.

After reset: 3FH
Address: F02E1H

Correspondence between the activation sources and SELHS0i (i = 0 to 5) bits is shown below.

<R>

SELHS05 to SELHS00						Description
0	0	0	0	0	0	Activation source number 0 is selected as high-speed channel 0.
0	0	0	0	0	1	Activation source number 1 is selected as high-speed channel 0.
0	0	0	0	1	0	Activation source number 2 is selected as high-speed channel 0.
:						:
:						:
1	0	1	0	1	1	Activation source number 43 is selected as high-speed channel 0.
1	0	1	1	0	0	Activation source number 44 is selected as high-speed channel 0.
1	0	1	1	0	1	Activation source number 45 is selected as high-speed channel 0.
1	1	1	1	1	1	High-speed channel 0 is not used.
Other than above						Setting prohibited

Cautions 1. Modify the data of the SELHS0 register when the corresponding bit among bits DTCENi0 to DTCENi7 in the DTCENi (i = 0 to 5[Note]) register is 0 (DTC activation disabled).

2. Do not access the SELHS0 register using a DTC transfer.

Note Products of groups A, B, C, and D: i = 0 to 4
Products of group E: i = 0 to 5

19.2.14 High-speed DTC Channel Select Register 1 (SELHS1)

The SELHS1 register is an 8-bit register that is used to select the high-speed DTC channel.

Figure 19-14. Format of High-speed DTC Channel Select Register 1 (SELHS1)

Symbol	7	6	5	4	3	2	1	0
SELHS1	0	0	SELHS15	SELHS14	SELHS13	SELHS12	SELHS11	SELHS10

The SELHS1 register can be set with an 8-bit or 1-bit memory manipulation instruction, not set with a 16-bit memory manipulation instruction.

After reset: 3FH

Address: F02E2H

Correspondence between the activation sources and SELHS1i (i = 0 to 5) bits is shown below.

<R>

SELHS15 to SELHS10						Description
0	0	0	0	0	0	Activation source number 0 is selected as high-speed channel 1.
0	0	0	0	0	1	Activation source number 1 is selected as high-speed channel 1.
0	0	0	0	1	0	Activation source number 2 is selected as high-speed channel 1.
:						:
:						:
1	0	1	0	1	1	Activation source number 43 is selected as high-speed channel 1.
1	0	1	1	0	0	Activation source number 44 is selected as high-speed channel 1.
1	0	1	1	0	1	Activation source number 45 is selected as high-speed channel 1.
1	1	1	1	1	1	High-speed channel 1 is not used.
Other than above						Setting prohibited

Cautions 1. Modify the data of the SELHS1 register when the corresponding bit among bits DTCENi0 to DTCENi7 in the DTCENi (i = 0 to 5[Note]) register is 0 (DTC activation disabled).

2. Do not access the SELHS1 register using a DTC transfer.

Note Products of groups A, B, C, and D: i = 0 to 4

Products of group E: i = 0 to 5

19.2.15 High-speed DTC Control Register m (HDTCCR0/1) (m = 0, 1)

The HDTCCRm register is used to control the high-speed DTC transfer operating mode.

Figure 19-15. Format of High-speed DTC Control Register m (HDTCCRm)

Address: F02D0H (HDTCCR0), F02D8H (HDTCCR1) After reset: 00H

Symbol	7	<6>	<5>	<4>	<3>	<2>	<1>	<0>
HDTCCRm	0	HSZm	HRPTINTm	HCHNEm	HDAMODm	HSAMODm	HRPTSELm	HMODEm

Bit 7	Reserved	R/W
0	Set to 0.	R/W

HSZm	Data size selection	R/W
0	8 bits	R/W
1	16 bits	

HRPTINTm	Enabling/disabling repeat mode interrupts	R/W
0	Interrupt generation disabled	R/W
1	Interrupt generation enabled	
The setting of the HRPTINTm bit is invalid when the HMODEm bit is 0 (normal mode).		

HCHNEm	Enabling/disabling chain transfers	R/W
0	Chain transfers disabled	R/W
1	Chain transfers enabled	
Set the CHNE bit in the DTCCR23 register to 0 (chain transfers disabled). Set the HCHNEm bit to 0 (chain transfers disabled) when the activation source number is set to the maximum value by the SELHSm register.		

HDAMODm	Transfer destination address control	R/W
0	Fixed	R/W
1	Incremented	
The setting of the HDAMODm bit is invalid when the HMODEm bit is 1 (repeat mode) and the HRPTSELm bit is 0 (transfer destination is the repeat area).		

HSAMODm	Transfer source address control	R/W
0	Fixed	R/W
1	Incremented	
The setting of the HSAMODm bit is invalid when the HMODEm bit is 1 (repeat mode) and the HRPTSELm bit is 1 (transfer source is the repeat area).		

HRPTSELm	Repeat area selection	R/W
0	Transfer destination is the repeat area	R/W
1	Transfer source is the repeat area	
The setting of the HRPTSELm bit is invalid when the HMODEm bit is 0 (normal mode).		

HMODEm	Transfer mode selection	R/W
0	Normal mode	R/W
1	Repeat mode	

Caution Do not access the HDTCCRm register using a high-speed DTC transfer.

19.2.16 High-speed DTC Transfer Count Register m (HDTCCT0/1) (m = 0, 1)

This register is used to set the number of high-speed DTC data transfers. The value is decremented by 1 each time DTC transfer is activated once.

Figure 19-16. Format of High-speed DTC Transfer Count Register m (HDTCCTm)

Address: F02D2H (HDTCCT0), F02DAH (HDTCCT1) After reset: 00H

Symbol	7	6	5	4	3	2	1	0
HDTCCTm	HDTCCTm7	HDTCCTm6	HDTCCTm5	HDTCCTm4	HDTCCTm3	HDTCCTm2	HDTCCTm1	HDTCCTm0

HDTCCTm	Number of Transfers	R/W
00H	256 times	R/W
01H	Once	
02H	2 times	
03H	3 times	
. . .	. . .	
FDH	253 times	
FEH	254 times	
FFH	255 times	

Caution Do not access the HDTCCTm register using a high-speed DTC transfer.

19.2.17 DTC Transfer Count Reload Register m (HDTRLD0/1) (m = 0, 1)

This register is used to set the initial value of the transfer count register in repeat mode. Since the value of this register is reloaded to the HDTCCTm register in repeat mode, set the same value as the initial value of the HDTCCTm register.

Figure 19-17. Format of High-speed DTC Transfer Count Reload Register m (HDTRLDm)

Address: F02D3H (HDTRLD0), F02DBH (HDTRLD1) After reset: 00H

Symbol	7	6	5	4	3	2	1	0
HDTRLDm	HDTRLDm7	HDTRLDm6	HDTRLDm5	HDTRLDm4	HDTRLDm3	HDTRLDm2	HDTRLDm1	HDTRLDm0

Caution Do not access the HDTRLDm register using a high-speed DTC transfer.

19.2.18 High-speed DTC Source Address Register m (HDTSAR0/1) (m = 0, 1)

Only the 1st SFR area and the 2nd SFR area can be set for the source address for high-speed transfer.

Set the lower 12-bit addresses of the HDTSARm.

The higher 4 bits are read as 0.

Figure 19-18. Format of High-speed DTC Source Address Register m (HDTSARm)

Address: F02D4H, F02D5H (HDTSAR0), F02DCH, F02DDH (HDTSAR1) After reset: 0000H

	15	14	13	12	11	10	9	8	7	6	5	4	3	2	1	0
HDTS ARm	0	0	0	0	HDTS ARm11	HDTS ARm10	HDTS ARm9	HDTS ARm8	HDTS ARm7	HDTS ARm6	HDTS ARm5	HDTS ARm4	HDTS ARm3	HDTS ARm2	HDTS ARm1	HDTS ARm0

Cautions 1. Do not set the general-purpose register (FFEE0H to FFEFFH) space to the transfer source address.

2. Do not access the HDTSARm register using a high-speed DTC transfer.

19.2.19 High-speed DTC Destination Address Register m (HDTDAR0/1) (m = 0, 1)

This register is used to specify the transfer destination address for data transfer.

Figure 19-19. Format of High-speed DTC Destination Address Register m (HDTDARm)

Address: F02D6H, F02D7H (HDTDAR0), F02DEH, F02DFH (HDTDAR1) After reset: 0000H

	15	14	13	12	11	10	9	8	7	6	5	4	3	2	1	0
HDTD ARm	HDTD ARm15	HDTD ARm14	HDTD ARm13	HDTD ARm12	HDTD ARm11	HDTD ARm10	HDTD ARm9	HDTD ARm8	HDTD ARm7	HDTD ARm6	HDTD ARm5	HDTD ARm4	HDTD ARm3	HDTD ARm2	HDTD ARm1	HDTD ARm0

Cautions 1. Do not set the general-purpose register (FFEE0H to FFEFFH) space to the transfer destination address.

2. Do not access the HDTDARm register using a high-speed DTC transfer.

19.3 Operation

When the DTC is activated, control data is read from the DTC control data area to perform data transfers and control data after data transfer is written back to the DTC control data area. Twenty-four sets of control data can be stored in the DTC control data area, which allows 24 types of data transfers to be performed.

There are two transfer modes (normal mode and repeat mode) and two transfer sizes (8-bit transfer and 16-bit transfer). When the CHNE bit in the DTCCRj (j = 0 to 23) register is set to 1 (chain transfers enabled), multiple control data is read and data transfers are continuously performed by one activation source (chain transfers).

A transfer source address is specified by the 16-bit register DTSARj, and a transfer destination address is specified by the 16-bit register DTDARj.

The values in registers DTSARj and DTDARj are separately incremented or fixed according to the control data after the data transfer.

This product supports high-speed transfer operation. The high-speed transfer can be realized by allocating the dedicated control data to the SFR area instead of the RAM area. To perform basic operation, normal mode requires five clock cycles to read vector and control data, while high-speed transfer requires one cycle. In addition, to write back control data, normal mode requires a maximum of three clock cycles, while high-speed transfer requires one cycle.

19.3.1 Activation Sources

The DTC is activated by an interrupt signal from the peripheral functions. The interrupt signals to activate the DTC are selected with the DTCENi (i = 0 to 5[Note 2]) register.

The DTC sets the corresponding bit among bits DTCENi0 to DTCENi7 in the DTCENi register to 0 (activation disabled) during operation when the setting of data transfer (the first transfer in chain transfers) is either of the following:

- A transfer that causes the DTCCTj (j = 0 to 23) register value to change to 0 in normal mode
- A transfer that causes the DTCCTj register value to change to 0 while the RPTINT bit in the DTCCRj register is 1 (interrupt generation enabled) in repeat mode

Figure 19-20 shows the DTC internal operation flowchart.

Figure 19-20. DTC Internal Operation Flowchart

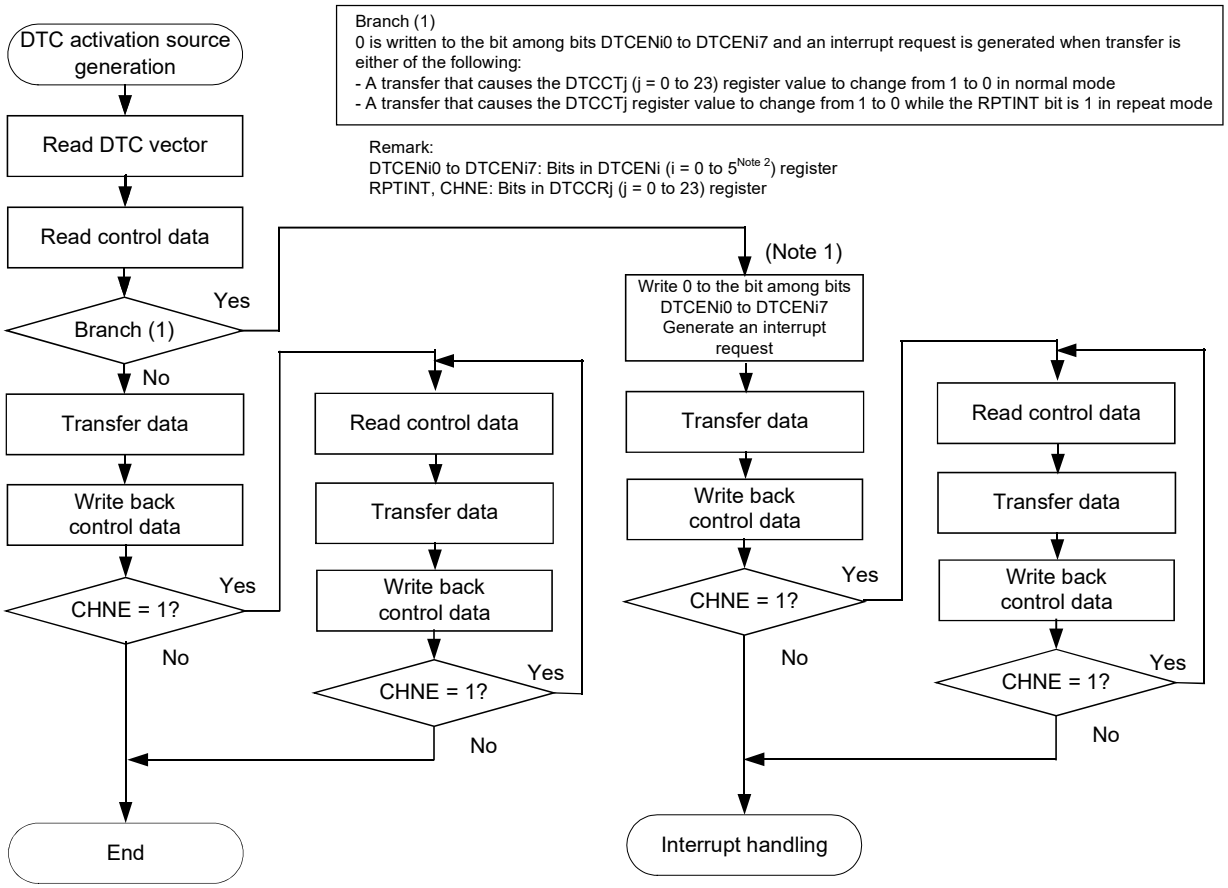

Notes 1. 0 is not written to the bit among bits DTCENi0 to DTCENi7 for data transfers activated by the setting to enable chain transfers (the CHNE bit is 1). Also, no interrupt request is generated.

2. Products of groups A, B, C, and D: i = 0 to 4
Products of group E: i = 0 to 5

19.3.2 Normal Mode

One to 256 bytes of data are transferred by one activation during 8-bit transfer and 2 to 512 bytes during 16-bit transfer. The number of transfers can be 1 to 256 times. When the data transfer causing the DTCCTj (j = 0 to 23) register value to change to 0 is performed, the DTC generates an interrupt request corresponding to the activation source to the interrupt controller during DTC operation, and sets the corresponding bit among bits DTCENi0 to DTCENi7 (i = 0 to 5[Note]) in the DTCENi register to 0 (activation disabled).

Table 19-7 shows register functions in normal mode. Figure 19-21 shows data transfers in normal mode.

Note Products of groups A, B, C, and D: i = 0 to 4
Products of group E: i = 0 to 5

Table 19-7. Register Functions in Normal Mode

Register Name	Symbol	Function
DTC block size register j	DTBLSj	Size of the data block to be transferred by one activation
DTC transfer count register j	DTCCTj	Number of data transfers
DTC transfer count reload register j	DTRLDj	Not used [Note]
DTC source address register j	DTSARj	Data transfer source address
DTC destination address register j	DTDARj	Data transfer destination address

Note Initialize DTRLDj register with any desired value because the control data are read.

Remark j = 0 to 23

Figure 19-21. Data Transfers in Normal Mode

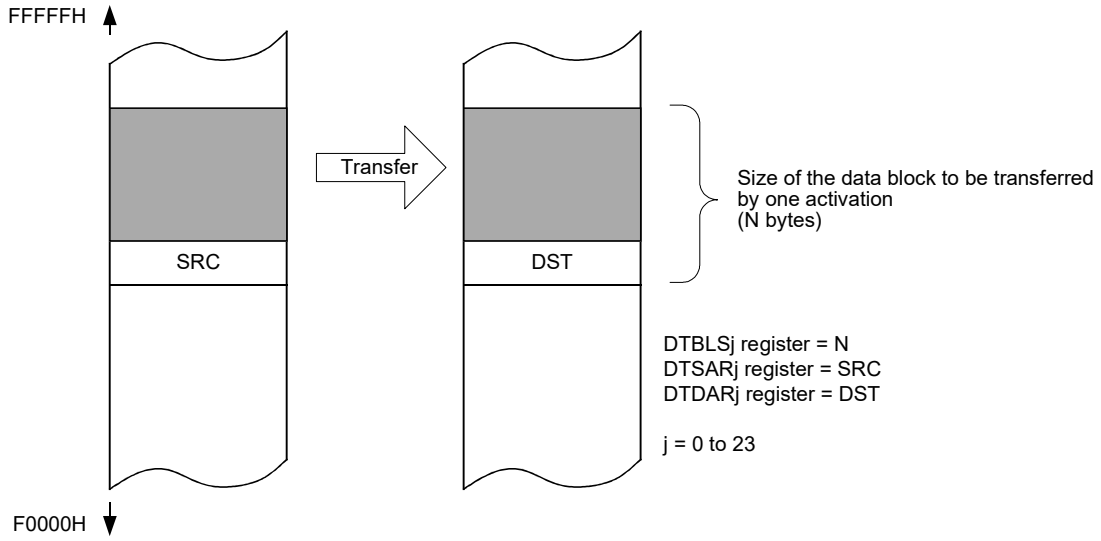

DTCCR Register Setting				Source Address Control	Destination Address Control	Source Address after Transfer	Destination Address after Transfer
DAMOD	SAMOD	RPTSEL	MODE				
0	0	X	0	Fixed	Fixed	SRC	DST
0	1	X	0	Incremented	Fixed	SRC + N	DST
1	0	X	0	Fixed	Incremented	SRC	DST + N
1	1	X	0	Incremented	Incremented	SRC + N	DST + N

X: 0 or 1

(1) Example 1 of using normal mode: Consecutively capturing A/D conversion results

The DTC is activated by an A/D conversion end interrupt and the value of the A/D conversion result register is transferred to RAM.

- The vector address is FFB09H and control data is allocated at FFBA0H to FFBA7H.
- An A/D interrupt is assigned to source number 9.
- <R> Transfers 2-byte data of the A/D conversion result register (FFF1EH, FFF1FH) for 40 times to 80 bytes of FFD80H to FFDCFH of RAM.

Figure 19-22. Example 1 of Using Normal Mode: Consecutively Capturing A/D Conversion Results

<R>

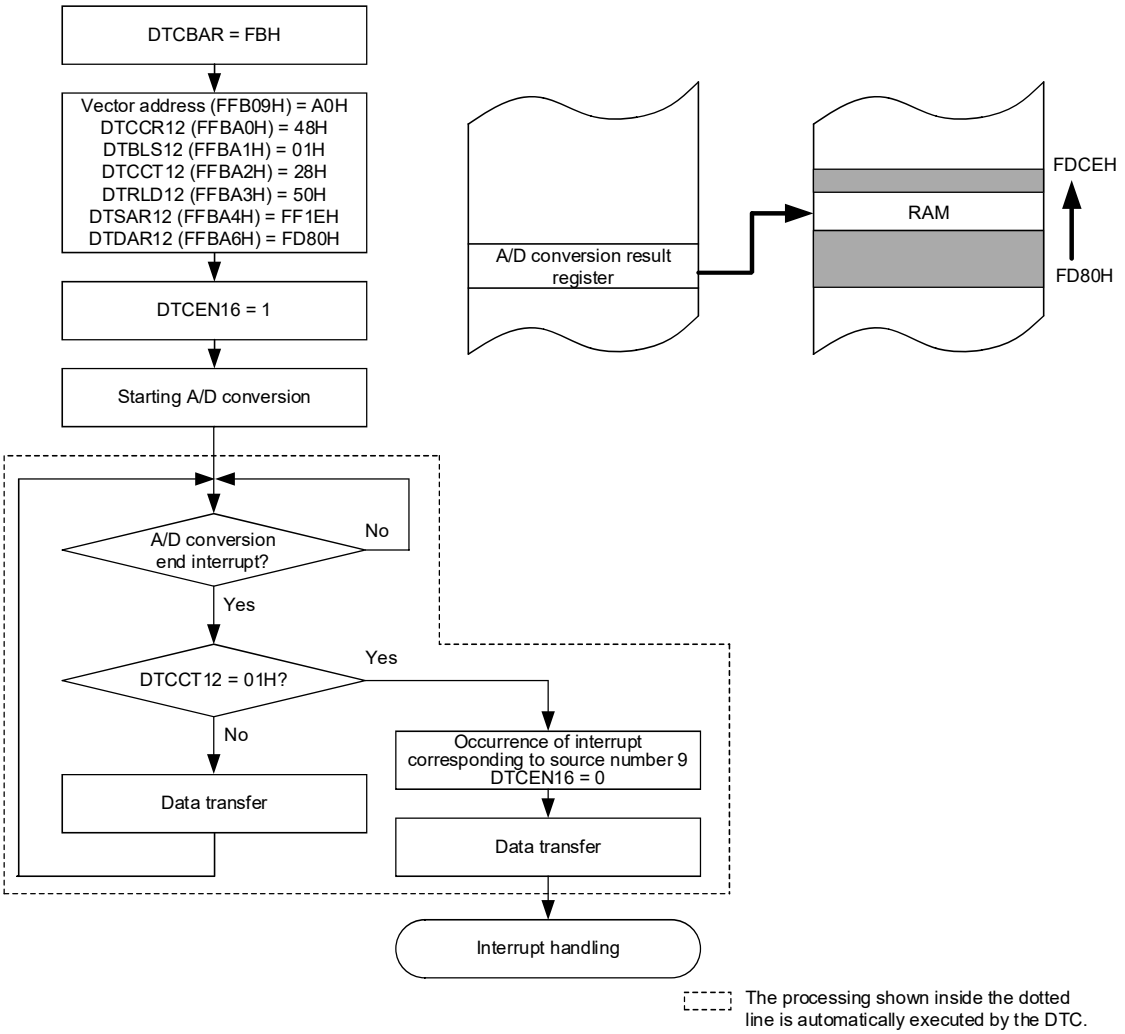

The data of DTRLD12 does not affect DTC transfer operation because of normal mode.

19.3.3 Repeat Mode

<R> One to 255 bytes of data are transferred by one activation. Either of the transfer source or destination should be specified as the repeat area. The number of transfers can be 1 to 255 times. On completion of the specified number of transfers, the DTCCTj (j = 0 to 23) register and the address specified for the repeat area are initialized to continue transfers. When the data transfer causing the DTCCTj register value to change to 0 is performed while the RPTINT bit in the DTCCRj register is 1 (interrupt generation enabled), the DTC generates an interrupt request corresponding to the activation source to the interrupt controller during DTC operation, and sets the corresponding bit among bits DTCENi0 to DTCENi7 (i = 0 to 5 [Note]) to 0 (activation disabled). When the RPTINT bit in the DTCCRj register is 0 (interrupt generation disabled), no interrupt request is generated even if the data transfer causing the DTCCTj register value to change to 0 is performed. Also, bits DTCENi0 to DTCENi7 are not set to 0.

Table 19-8 lists register functions in repeat mode. Figure 19-23 shows data transfers in repeat mode.

Note Products of groups A, B, C, and D: i = 0 to 4
Products of group E: i = 0 to 5

Table 19-8. Register Functions in Repeat Mode

Register Name	Symbol	Function
DTC block size register j	DTBLSj	Size of the data block to be transferred by one activation
DTC transfer count register j	DTCCTj	Number of data transfers
DTC transfer count reload register j	DTRLDj	This register value is reloaded to the DTCCT register (the number of transfers is initialized).
DTC source address register j	DTSARj	Data transfer source address
DTC destination address register j	DTDARj	Data transfer destination address

Remark j = 0 to 23

Figure 19-23. Data Transfers in Repeat Mode

DTCCTj register ≠ 1

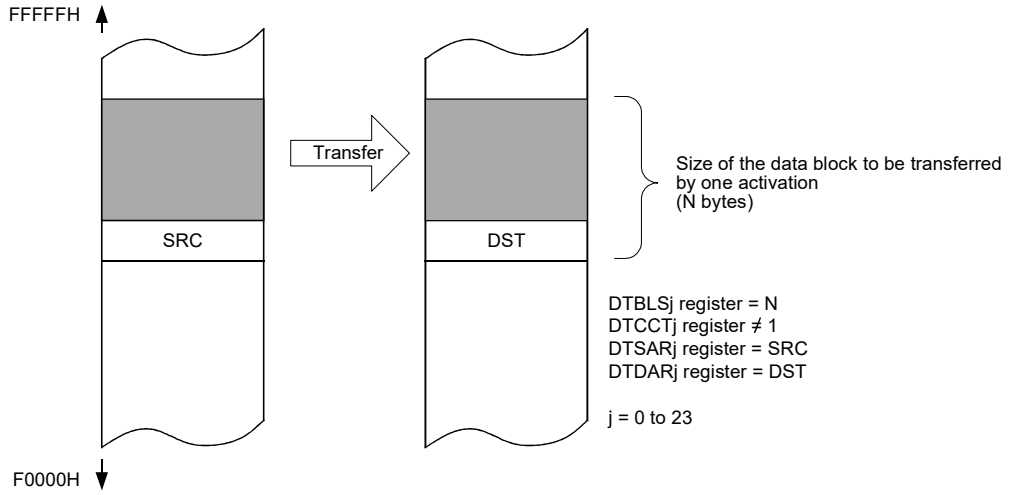

DTCCR Register Setting				Source Address Control	Destination Address Control	Source Address after Transfer	Destination Address after Transfer
DAMOD	SAMOD	RPTSEL	MODE				
0	X	1	1	Repeat area	Fixed	SRC + N	DST
1	X	1	1	Repeat area	Incremented	SRC + N	DST + N
X	0	0	1	Fixed	Repeat area	SRC	DST + N
X	1	0	1	Incremented	Repeat area	SRC + N	DST + N

X: 0 or 1

DTCCTj register = 1

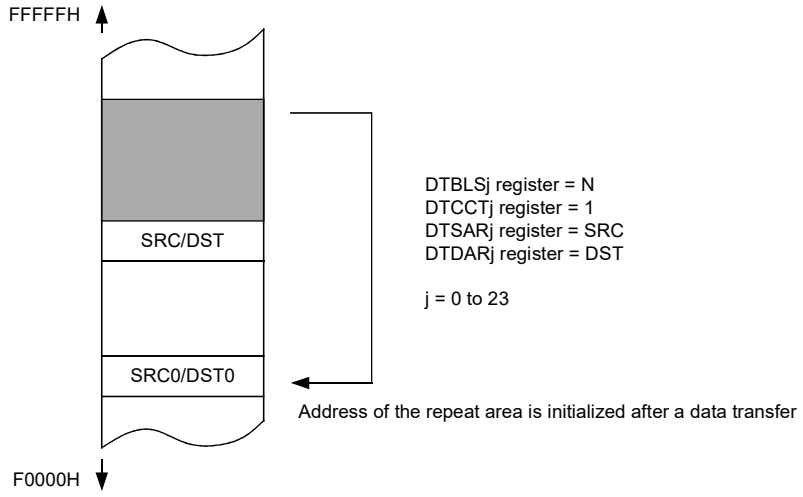

DTCCR Register Setting				Source Address Control	Destination Address Control	Source Address after Transfer	Destination Address after Transfer
DAMOD	SAMOD	RPTSEL	MODE				
0	X	1	1	Repeat area	Fixed	SRC0	DST
1	X	1	1	Repeat area	Incremented	SRC0	DST + N
X	0	0	1	Fixed	Repeat area	SRC	DST0
X	1	0	1	Incremented	Repeat area	SRC + N	DST0

SRC0: Initial source address value
DST0: Initial destination address value
X: 0 or 1

Cautions 1. When repeat mode is used, the lower 8 bits of the initial value for the repeat area address must be 00H.

2. When repeat mode is used, the data size of the repeat area must be set to 255 bytes or less.

(1) Example 1 of using repeat mode: Outputting a stepping motor control pulse using ports

The DTC is activated by an interval timer interrupt and the pattern of the motor control pulse stored in the code flash memory is transferred to general-purpose ports.

- The vector address is FFC17H and control data is allocated at FFCD0H to FFCD7H.
- The timer interrupt is assigned to source number 23.
- Transfers 8-byte data of 02000H to 02007H of the code flash memory from the mirror space (F2000H to F2007H) to port register 1 (FFF01H).
- A repeat mode interrupt is disabled.

Figure 19-24. Example 1 of Using Repeat Mode: Outputting a Stepping Motor Control Pulse Using Ports

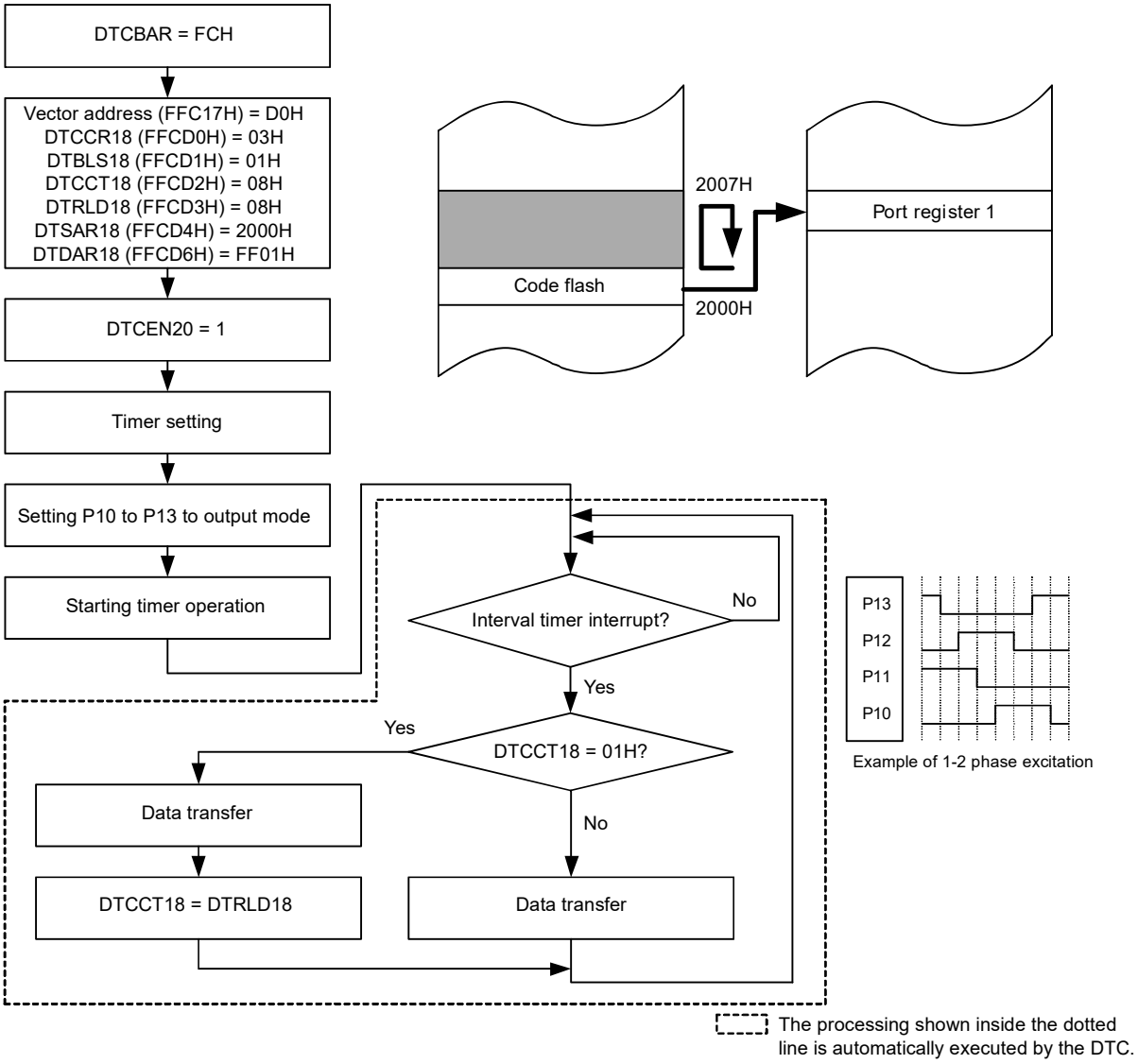

To stop the output, stop the timer first and then clear DTCEN20.

(2) Example 2 of using repeat mode: Outputting a sine wave using the 8-bit D/A converter

<R> The DTC is activated by an interval timer interrupt and the table of the sine wave stored in the data flash memory is transferred to the 8-bit D/A conversion value setting register 0.

The timer interval time is set to the D/A output setup time.

- The vector address is FFC17H and control data is allocated at FFCD8H to FFCDFH.
- The timer interrupt is assigned to source bumber 23.
- <R> Transfers 255-byte data of F1200H to F12FEH of the data flash memory to the D/A conversion value setting register 0 (FFF34H).
- A repeat mode interrupt is disabled.

Figure 19-25. Example 2 of Using Repeat Mode: Outputting a Sine Wave Using the 8-bit D/A Converter

<R>

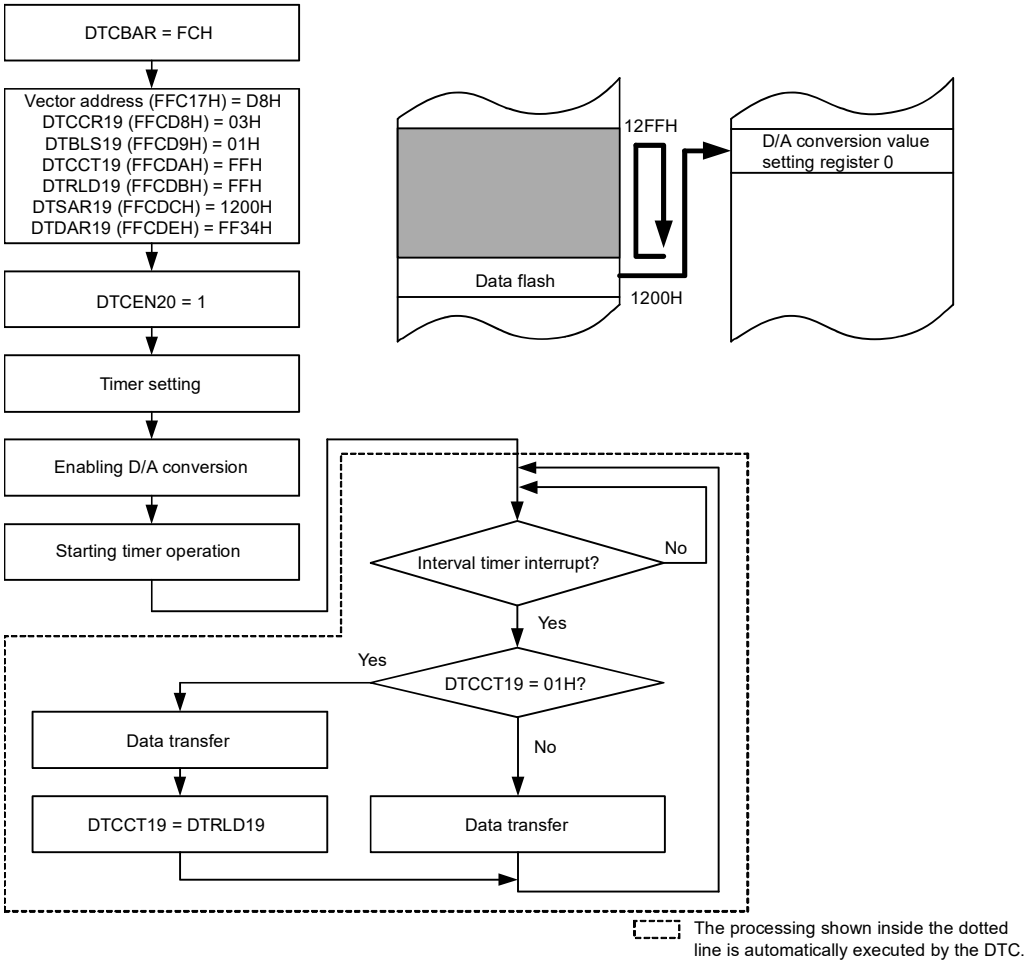

To stop the output, stop the timer first and then clear DTCEN20.

Caution A D/A converter is provided in the products with 96 Kbytes or more of code flash memory.

19.3.4 Chain Transfers

When the CHNE bit in the DTCCRj (j = 0 to 22) register is 1 (chain transfers enabled), multiple data transfers can be continuously performed by one activation source.

When the DTC is activated, one control data is selected according to the data read from the DTC vector address corresponding to the activation source, and the selected control data is read from the DTC control data area. When the CHNE bit for the control data is 1 (chain transfers enabled), the next control data immediately following the current control data is read and transferred after the current transfer is completed. This operation is repeated until the data transfer with the control data for which the CHNE bit is 0 (chain transfers disabled) is completed.

Figure 19-26 shows data transfers in chain transfers.

Figure 19-26. Data Transfers during Chain Transfers

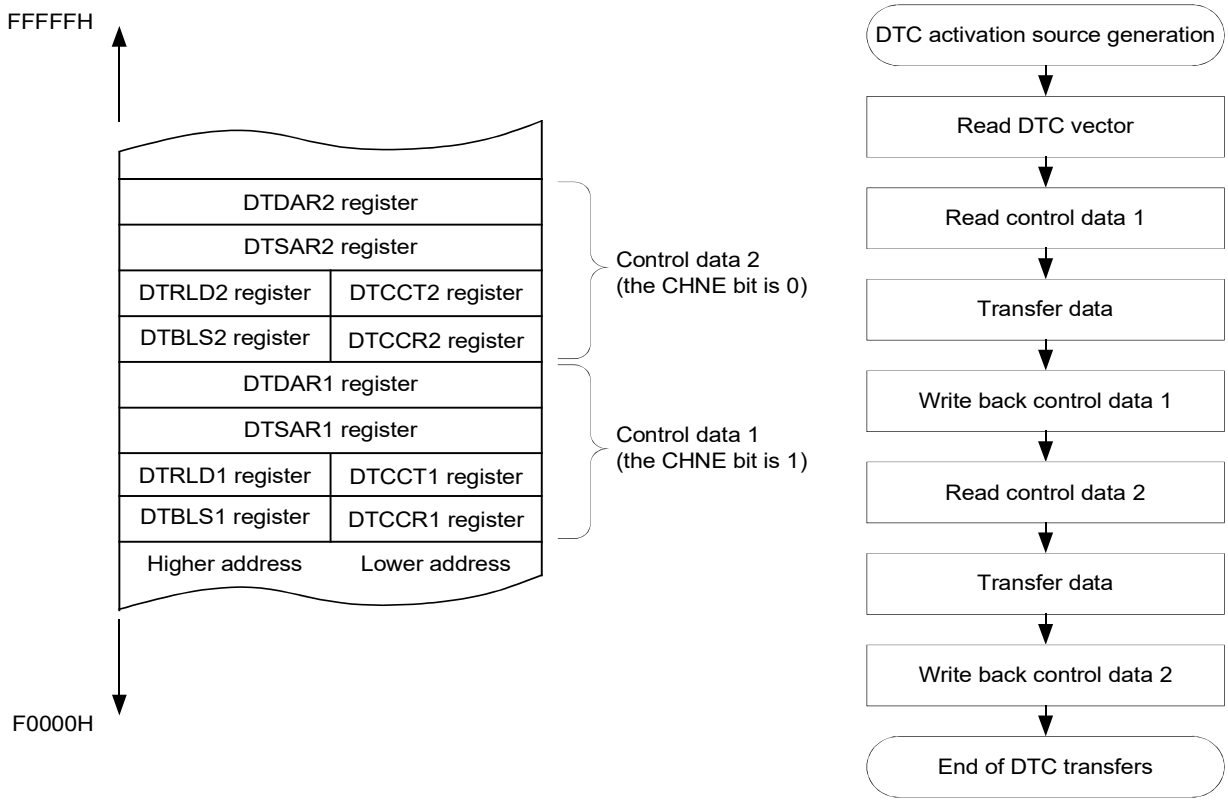

(1) Example of using chain transfers: Consecutively capturing A/D conversion results and UART transmission

The DTC is activated by an A/D conversion end interrupt and A/D conversion results are transferred to RAM, and then transmitted using the UART.

- The vector address is FFB09H.
- Control data of capturing A/D conversion results is allocated at FFBA0H to FFBA7H.
- Control data of UART transmission is allocated at FFBA8H at FFBAFH.
- An A/D conversion end interrupt is assigned to source number 9.
- Transfers 2-byte data of the A/D conversion result register (FFF1FH, FFF1EH) to FFD80H to FFDCFH of RAM, and transfers the upper 1 byte (FFF1FH) of the A/D conversion result register to the UART transmit buffer (FFF10H).

Figure 19-27. Example of Using Chain Transfers: Consecutively Capturing A/D Conversion Results and UART Transmission

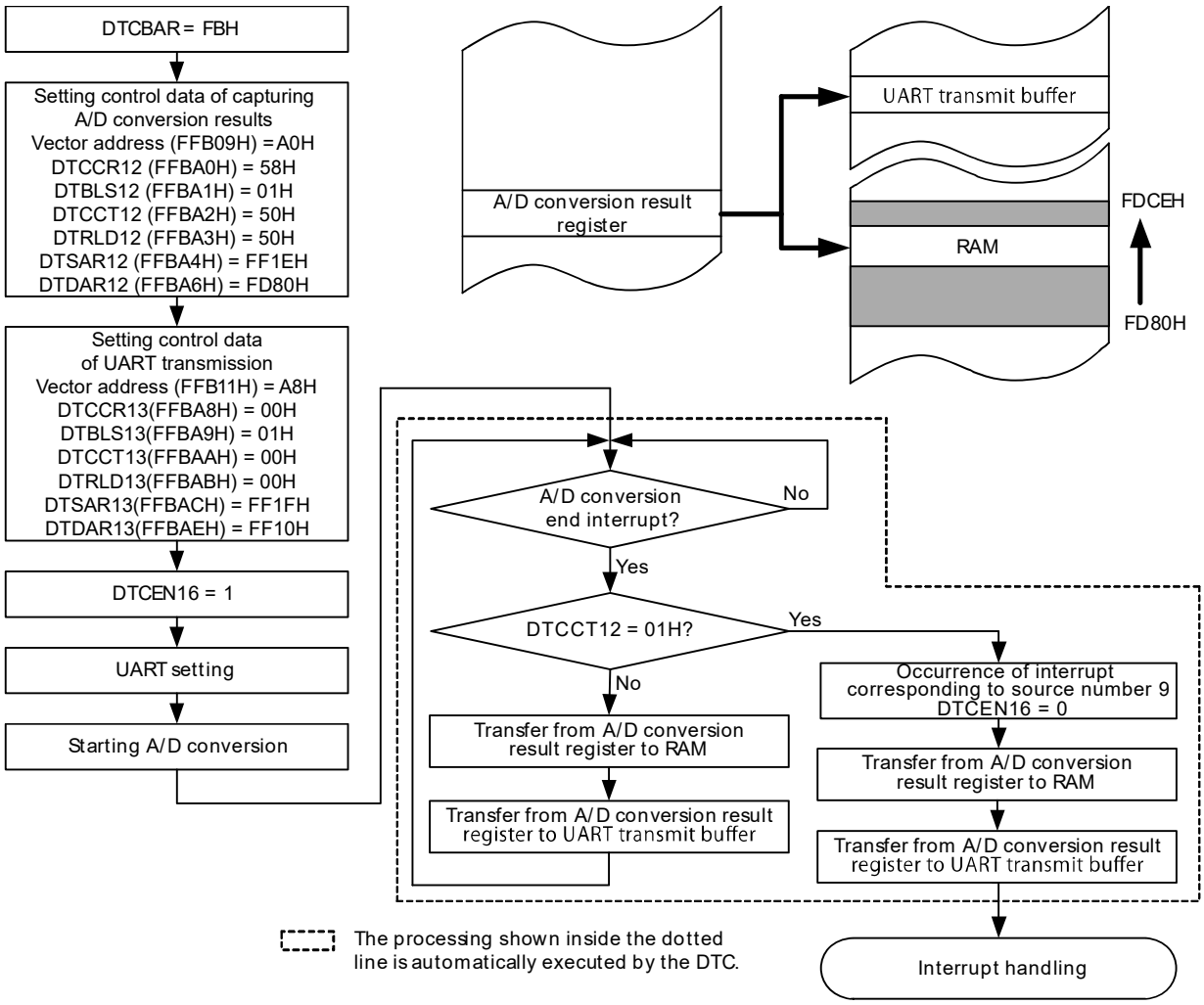

Cautions 1. Set the CHNE bit in the DTCCR23 register to 0 (chain transfers disabled).

2. For chain transfer, in the second and subsequent data transfers, bits DTCENi0 to DTCENi7 (i = 0 to 5[Note]) in the DTCENi register are not set to 0 (DTC activation disabled), and no interrupt request is generated.

Note Products of groups A, B, C, and D: i = 0 to 4
Products of group E: i = 0 to 5

19.3.5 High-Speed Transfer Operation

There are two channels for high-speed transfer. Each DTC activation source is selected by the high-speed DTC channel select register m. When the DTC is activated by the source selected by the high-speed transfer channel, the control data dedicated for high-speed transfer instead of the control data specified by the DTC vector address is read and transferred.

Initialize the control data area with any desired value because the control data are read.

Block transfer always transfers 1-byte data for 8-bit transfer and 2-byte data for 16-bit transfer.

Chain transfer reads and transfers the control data consecutively allocated subsequent to the control data specified by the DTC vector address. During a chain transfer, when control data is for the source selected by the other high-speed transfer channel, the consecutively allocated control data instead of the control data dedicated for high-speed transfer is read and transferred.

Table 19-9 shows the register functions in high-speed transfer operation.

Table 19-9. Register Functions in High-speed Transfer Mode

Register Name	Symbol	Function
High-speed DTC channel select register 0/1	SELHS0/1	Channel selection
High-speed DTC control register 0/1	HDTCCR0/1	Operating mode control
High-speed DTC transfer count register 0/1	HDTCCT0/1	Number of data transfers
High-speed DTC transfer count reload register 0/1	HDTRLD0/1	Initial value setting
High-speed DTC source address register 0/1	HDTSAR0/1	Data transfer source address
High-speed DTC destination address register 0/1	HDTDAR0/1	Data transfer destination address

19.4 Notes on DTC

19.4.1 Setting DTC Registers and Vector Table

- Do not access the DTC SFRs, the DTC control data area, the DTC vector table area, or the general-register (FFEE0H to FFEFFH) space using a DTC transfer.
- Modify the DTC base address register (DTCBAR) while all DTC activation sources are set to activation disabled.
- Do not rewrite the DTC base address register (DTCBAR) twice or more.
- Modify the data of the DTCCRj, DTBLSj, DTCCTj, DTRLDj, DTSARj, or DTDARj register when the corresponding bit among bits DTCENi0 to DTCENi7 in the DTCENi (i = 0 to 5[Note]) register is 0 (DTC activation disabled).
- Modify the start address of the DTC control data area to be set in the vector table when the corresponding bit among bits DTCENi0 to DTCENi7 in the DTCENi (i = 0 to 5[Note]) register is 0 (DTC activation disabled).

Note Products of groups A, B, C, and D: i = 0 to 4
Products of group E: i = 0 to 5

19.4.2 Allocation of DTC Control Data Area and DTC Vector Table Area

The areas where the DTC control data and vector table can be allocated differ, depending on the usage conditions.

- It is prohibited to use the general-purpose register (FFF00H to FFEE0H) space as the DTC control data area or DTC vector table area.
- The 18-byte area between the DTC vector table area and the DTC control data area is a reserved area to be used when the number of DTC activation sources is expanded.

19.4.3 DTC Pending Instruction

If a transfer request is generated from the DTC to the CPU, the DTC is not activated immediately after the following instructions. Also, the DTC is not activated between PREFIX instruction code and the instruction immediately after that code.

- Call/return instruction
- Unconditional branch instruction
- Conditional branch instruction
- Read access instruction for code flash memory
- Bit manipulation instructions for IFxx, MKxx, PRxx, and PSW, and an 8-bit manipulation instruction that has the ES register as operand
- Instruction for accessing the data flash memory
- Multiply, Divide, Multiply & accumulate instruction (exclude MULU instruction)

Cautions 1. On reception of a DTC transfer request, all interrupt requests are held pending until the DTC transfer is completed.

2. All interrupt requests are also held pending while a DTC transfer is suspended due to a DTC pending instruction.

19.4.4 Operations when an Instruction which Accesses an SFR Register that Requires a Wait is Executed

DTC transfer is suspended while an instruction which accesses an SFR register[Note] that requires a wait is executed. The DTC transfer remains suspended as long as polling of the SFR register that requires a wait continues.

Note SFR registers that require a wait are registers of the CAM and LIN modules, and the TRJ0 register of the timer RJ module.

19.4.5 Operation when Accessing Data Flash Memory Space

Because DTC data transfer is suspended to access the data flash space, be sure to add the DTC pending instruction. If the data flash space is accessed after an instruction execution from start of DTC data transfer, a 3-clock wait will be inserted to the next instruction.

```
Instruction 1
DTC data transfer
Instruction 2 ◄- The wait of three clock cycles occurs.
MOV A,          ! Data Flash space
```

19.4.6 Number of DTC Execution Clock Cycles

Table 19-10 lists the operations following DTC activation and required number of clock cycles for each operation.

Table 19-10. Operations Following DTC Activation and Required Number of Cycles

Vector Read	Control Data		Data Read	Data Write
	Read	Write-back		
1	4	**Note 1**	**Note 2**	**Note 2**

Notes 1. For the number of clock cycles required for control data write-back, refer to **Table 19-11 Number of Clock Cycles Required for Control Data Write-Back Operation**.

2. For the number of clock cycles required for data read/write, refer to **Table 19-12 Number of Clock Cycles Required for Data Read/Write Operation**.

Table 19-11. Number of Clock Cycles Required for Control Data Write-Back Operation

DTCCR Register Setting				Address Setting		Control Register to be Written Back				Number of Clock Cycles
DAMOD	SAMOD	RPTSEL	MODE	Source	Destination	DTCCTj Register	DTRLDj Register	DTSARj Register	DTDARj Register	
0	0	X	0	Fixed	Fixed	Written back	Written back	Not written back	Not written back	1
0	1	X	0	Incremented	Fixed	Written back	Written back	Written back	Not written back	2
1	0	X	0	Fixed	Incremented	Written back	Written back	Not written back	Written back	2
1	1	X	0	Incremented	Incremented	Written back	Written back	Written back	Written back	3
0	X	1	1	Repeat area	Fixed	Written back	Written back	Written back	Not written back	2
1	X	1	1		Incremented	Written back	Written back	Written back	Written back	3
X	0	0	1	Fixed	Repeat area	Written back	Written back	Not written back	Written back	2
X	1	0	1	Incremented		Written back	Written back	Written back	Written back	3

Remark j = 0 to 23; X: 0 or 1

Table 19-12. Number of Clock Cycles Required for Data Read/Write Operation

Operation	RAM	Code Flash Memory	Data Flash Memory	SFR	2nd SFR	
					No Wait State	Wait States
Data read	1	2	4	1	1	1 + number of wait states Note
Data write	1	-	-	1	1	1 + number of wait states Note

Note The number of wait states differs depending on the specifications of the register allocated to the second SFR to be accessed.

19.4.7 Number of High-speed DTC Execution Clock Cycles

Table 19-13 lists the operations following high-speed DTC activation and required number of clock cycles for each operation.

Table 19-13. Operations Following High-speed DTC Activation and Required Number of Cycles

Vector Read	Control Data		Data Read	Data Write
	Read	Write-back		
1		1 Note 1	**Note 2**	**Note 2**

Notes 1. For the number of clock cycles required for control data write-back, refer to **Table 19-14 Number of Clock Cycles Required for Control Data Write-Back Operation**.

2. For the number of clock cycles required for data read/write, refer to **Table 19-15 Number of Clock Cycles Required for Data Read/Write Operation**.

Table 19-14. Number of Clock Cycles Required for Control Data Write-Back Operation

HDTCCRm Register Setting				Address Setting		Control Register to be Written Back				Number of Clock Cycles
HDAMODm	HSAMODm	HRPTSELm	HMODEm	Source	Destination	HDTCCTm Register	HDTRLDm Register	HDTSARm Register	HDTDARm Register	
0	0	X	0	Fixed	Fixed	Written back	Not written back	Not written back	Not written back	1
0	1	X	0	Incremented	Fixed	Written back	Not written back	Written back	Not written back	1
1	0	X	0	Fixed	Incremented	Written back	Not written back	Not written back	Written back	1
1	1	X	0	Incremented	Incremented	Written back	Not written back	Written back	Written back	1
0	X	1	1	Repeat area	Fixed	Written back	Not written back	Written back	Not written back	1
1	X	1	1		Incremented	Written back	Not written back	Written back	Written back	1
X	0	0	1	Fixed	Repeat area	Written back	Not written back	Not written back	Written back	1
X	1	0	1	Incremented		Written back	Not written back	Written back	Written back	1

Remark m = 0, 1; X: 0 or 1

Table 19-15. Number of Clock Cycles Required for Data Read/Write Operation

Operation	RAM	Code Flash Memory	Data Flash Memory	SFR	2nd SFR	
					No Wait State	Wait States
Data read	-	-	-	1	1	1 + number of wait states Note
Data write	1	-	-	1	1	1 + number of wait states Note

Note The number of wait states differs depending on the specifications of the register allocated to the second SFR to be accessed.

19.4.8 DTC Response Time

Table 19-16 lists the DTC response time. The DTC response time is the time from when the DTC activation source is detected until DTC transfer starts, excluding the number of DTC execution clocks.

The DTC response time in high-speed transfer is the same as that in the normal transfer.

Table 19-16. DTC Response Time

	Minimum Time	Maximum Time
Response Time	3 clocks	19 clocks

Note that the response from the DTC may be further delayed under the following cases. The number of delayed clock cycles differs depending on the conditions.

- When executing an instruction from the internal RAM
  Maximum response time: 20 clocks
- When executing a DTC pending instruction (refer to **19.4.3 DTC Pending Instruction**)
  Maximum response time: Maximum response time for each condition + execution clock cycles for the instruction to be held pending under the condition.
- When accessing the TRJ0 register that a wait occurs
  Maximum response time: Maximum response time for each condition + 1 clock

Remark 1 clock: $1/f_{CLK}$ (f_{CLK}: CPU/peripheral hardware clock)

19.4.9 DTC Activation Sources

- After inputting a DTC activation source, do not input the same activation source again until DTC transfer is completed.
- While a DTC activation source is generated, do not manipulate the DTC activation enable bit corresponding to the source.
- If DTC activation sources conflict, their priority levels are determined in order to select the source for activation when the CPU acknowledges the DTC transfer. For details on the priority levels of activation sources, refer to **19.2.3 DTC Vector Table**.
- When DTC activation is enabled under either of the following conditions, a DTC transfer is started and an interrupt is generated after completion of the transfer. Therefore, enable DTC activation after confirming the comparator output monitor flag (CMPMON0) as necessary.
  - The comparator is set to releasing STOP mode by comparator interrupt enabled (CSTEN = 1), comparator output not inverted (CINV = 0), and comparator input > reference voltage
  - The comparator is set to releasing STOP mode by comparator interrupt enabled (CSTEN = 1), comparator output inverted (CINV = 1), and comparator input < reference voltage

19.4.10 Operation in Standby Mode Status

Status	DTC Operation
HALT mode	Operable (Operation is disabled while in the low power consumption RTC mode)
STOP mode	DTC activation sources can be accepted Note 2
SNOOZE mode	Operable Notes 1, 3

Notes 1. The SNOOZE mode can only be specified when the high-speed on-chip oscillator clock is selected as f_{CLK}.

2. In the STOP mode, detecting a DTC activation source enables transition to SNOOZE mode and DTC transfer. After completion of transfer, the system returns to the STOP mode. However, since the code flash memory and the data flash memory are stopped during the SNOOZE mode, the flash memory cannot be set as the transfer source.

3. When an A/D conversion end interrupt is set as a DTC activation source from the A/D converter SNOOZE mode function, release the SNOOZE mode using the A/D conversion end interrupt to start CPU processing after completion of DTC transfer, or use a chained transfer to set the A/D converter SNOOZE mode function again after clear the AWC bit.

19.4.11 Notes When the RAM Area Is the Source of the Data for Transfer

Make initial settings with the desired values when the RAM area is the source of the data for transfer. RAM ECC interrupts may be produced in some cases.

19.4.12 Vector Address for High-Speed Transfer

For high-speed transfer, too, a DTC vector address allocated to each activation source is read out. For chain transfer at high-speed, control data indicated by the DTC vector address are allocated to contiguous areas, and the next control data are read out. For transfer other than chain transfer at high-speed, make initial settings with the desired values in the DTC vector addresses.

CHAPTER 20 EVENT LINK CONTROLLER (ELC) (RL78/F14 Only)

The event link controller (ELC) mutually connects (links) events output from each peripheral function. By linking events, it becomes possible to coordinate operation between peripheral functions directly without going through the CPU.

20.1 Overview

The ELC has the following functions.

- Capable of directly linking event signals from 20 (Group D products) or 26 (Group E products) types of peripheral functions to specified peripheral functions
- Event signals can be used as activation sources for operating any one of seven (Group D products) or nine (Group E products) types of peripheral functions

Remark Group A: RL78/F13 (LIN incorporated) products with 20, 30, 32, 48, or 64 pins and 16 Kbytes to 64 Kbytes of code flash memory

Group B: RL78/F13 (LIN incorporated) products with 48 or 64 pins and 96 Kbytes to 128 Kbytes of code flash memory or RL78/F13 (LIN incorporated) products with 80 pins and 64 Kbytes to 128 Kbytes of code flash memory

Group C: RL78/F13 (CAN incorporated) products with 30, 32, 48, 64, or 80 pins and 32 Kbytes to 128 Kbytes of code flash memory

Group D: RL78/F14 products with 30, 32, 48, 64, or 80 pins and 48 Kbytes to 96 Kbytes of code flash memory

Group E: RL78/F14 products with 48, 64, or 80 pins and 128 Kbytes to 256 Kbytes of code flash memory or RL78/F14 products with 100 pins and 64 Kbytes to 256 Kbytes of code flash memory

Figure 20-1 shows the Event Link Controller Block Diagram.

Figure 20-1. Event Link Controller Block Diagram

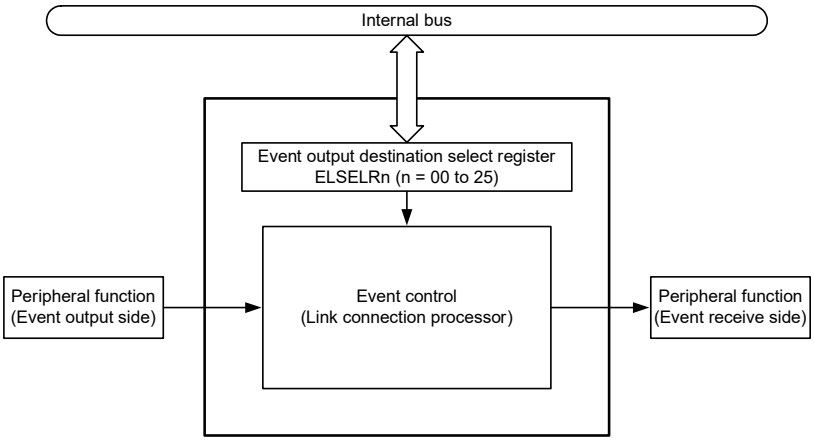

20.2 Registers

Table 20-1 lists the ELC register configuration.

Table 20-1. ELC Register Configuration

Register name	Symbol	After Reset	Address	Access size
Event Output Destination Select Register 00	ELSELR00	00H	F0780H	1, 8
Event Output Destination Select Register 01	ELSELR01	00H	F0781H	1, 8
Event Output Destination Select Register 02	ELSELR02	00H	F0782H	1, 8
Event Output Destination Select Register 03	ELSELR03	00H	F0783H	1, 8
Event Output Destination Select Register 04	ELSELR04	00H	F0784H	1, 8
Event Output Destination Select Register 05	ELSELR05	00H	F0785H	1, 8
Event Output Destination Select Register 06	ELSELR06	00H	F0786H	1, 8
Event Output Destination Select Register 07	ELSELR07	00H	F0787H	1, 8
Event Output Destination Select Register 08	ELSELR08	00H	F0788H	1, 8
Event Output Destination Select Register 09	ELSELR09	00H	F0789H	1, 8
Event Output Destination Select Register 10	ELSELR10	00H	F078AH	1, 8
Event Output Destination Select Register 11	ELSELR11	00H	F078BH	1, 8
Event Output Destination Select Register 12	ELSELR12	00H	F078CH	1, 8
Event Output Destination Select Register 13	ELSELR13	00H	F078DH	1, 8
Event Output Destination Select Register 14	ELSELR14	00H	F078EH	1, 8
Event Output Destination Select Register 15	ELSELR15	00H	F078FH	1, 8
Event Output Destination Select Register 16	ELSELR16	00H	F0790H	1, 8
Event Output Destination Select Register 17	ELSELR17	00H	F0791H	1, 8
Event Output Destination Select Register 18	ELSELR18	00H	F0792H	1, 8
Event Output Destination Select Register 19	ELSELR19	00H	F0793H	1, 8
Event Output Destination Select Register 20 Note	ELSELR20	00H	F0794H	1, 8
Event Output Destination Select Register 21 Note	ELSELR21	00H	F0795H	1, 8
Event Output Destination Select Register 22 Note	ELSELR22	00H	F0796H	1, 8
Event Output Destination Select Register 23 Note	ELSELR23	00H	F0797H	1, 8
Event Output Destination Select Register 24 Note	ELSELR24	00H	F0798H	1, 8
Event Output Destination Select Register 25 Note	ELSELR25	00H	F0799H	1, 8

Note For Group E products only.

20.2.1 Event Output Destination Select Register n (ELSELRn) (n = 00 to 25)

An ELSELRn register links each event signal to an operation of an event-receiving peripheral function (link destination peripheral function) after reception.

Do not set multiple event inputs to the same event output destination (event receive side). The operation of the event-receiving peripheral function will become undefined, and event signals may not be received correctly. In addition, do not set the event link generation source and the event link output destination to the same function.

Set an ELSELRn register during a period when no event output peripheral functions are generating event signals.

Table 20-2 lists the correspondence between ELSELRn (n = 00 to 25) registers and peripheral functions, and Table 20-3 lists the correspondence between values set to ELSELRn (n = 00 to 25) registers and operation of link destination peripheral functions at reception.

Figure 20-2. Format of Event Output Destination Select Register n (ELSELRn) (n = 00 to 25)

Address: F0780H (ELSELR00) to F0799H (ELSELR25) After reset: 00H R/W

Symbol	7	6	5	4	3	2	1	0
ELSELRn	-	-	-	-	ELSELRn3 Note 1	ELSELRn2	ELSELRn1	ELSELRn0

Bits 7 to 4	Reserved
-	The read value is 0.

ELSELRn3 Note 1	ELSELRn2	ELSELRn1	ELSELRn0	Event Link Selection
0	0	0	0	Event link disabled
0	0	0	1	Select operation of peripheral function to link Note 2
0	0	1	0	Select operation of peripheral function to link Note 2
0	0	1	1	Select operation of peripheral function to link Note 2
0	1	0	0	Select operation of peripheral function to link Note 2
0	1	0	1	Select operation of peripheral function to link Note 2
0	1	1	0	Select operation of peripheral function to link Note 2
0	1	1	1	Select operation of peripheral function to link Note 2
1	0	0	0	Select operation of peripheral function to link Note 2
1	0	0	1	Select operation of peripheral function to link Note 2

Notes 1. Only for Group E products. Set this bit to 0 in Group D products.

2. See **Table 20-3 Correspondence Between Values Set to ELSELRn (n = 00 to 25) Registers and Operation of Link Destination Peripheral Functions at Reception**.

Table 20-2. Correspondence Between ELSELRn (n = 00 to 25) Registers and Peripheral Functions

Register Name	Event Generator (Output Origin of Event Input n)	Event Description
ELSELR00	External interrupt edge detection 0	INTP0
ELSELR01	External interrupt edge detection 1	INTP1
ELSELR02	External interrupt edge detection 2	INTP2
ELSELR03	External interrupt edge detection 3	INTP3
ELSELR04	External interrupt edge detection 4	INTP4
ELSELR05	External interrupt edge detection 5	INTP5
ELSELR06	Key return signal detection	INTKR
ELSELR07	RTC fixed-cycle signal/Alarm match detection	INTRTC
ELSELR08	Timer RD0 Input capture A/Compare match A	INTTRD0
ELSELR09	Timer RD0 Input capture B/Compare match B	INTTRD0
ELSELR10	Timer RD1 Input capture A/Compare match A	INTTRD1
ELSELR11	Timer RD1 Input capture B/Compare match B	INTTRD1
ELSELR12	Timer RD1 Underflow	TRD1 underflow signal
ELSELR13	Timer RJ0	INTTRJ0
ELSELR14	TAU0 channel 0 Count end/Capture end	INTTM00
ELSELR15	TAU0 channel 1 Count end/Capture end	INTTM01
ELSELR16	TAU0 channel 2 Count end/Capture end	INTTM02
ELSELR17	TAU0 channel 3 Count end/Capture end	INTTM03
ELSELR18	TAU0 channel 4 Count end/Capture end	INTTM04
ELSELR19	Comparator detection 0	INTCMP0
ELSELR20 Note	TAU0 channel 5 Count end/Capture end	INTTM05
ELSELR21 Note	TAU0 channel 6 Count end/Capture end	INTTM06
ELSELR22 Note	TAU0 channel 7 Count end/Capture end	INTTM07
ELSELR23 Note	TAU1 channel 0 Count end/Capture end	INTTM10
ELSELR24 Note	TAU1 channel 1 Count end/Capture end	INTTM11
ELSELR25 Note	TAU1 channel 2 Count end/Capture end	INTTM12

Note For Group E products only.

Table 20-3. Correspondence Between Values Set to ELSELRn (n = 00 to 25) Registers and Operation of Link Destination Peripheral Functions at Reception

Bits ELSELRn3 to ELSELRn0 in ELSELRn Register	Link Destination Peripheral Function	Operation When Receiving Event
0001B	A/D converter	A/D conversion starts
0010B	Timer input of timer array unit 0 channel 0 Notes 1 and 2	Delay counter, input pulse interval measurement, external event counter
0011B	Timer input of timer array unit 0 channel 1 Notes 1 and 2	
0100B	Timer RJ0	Count source
0101B	Timer RD0	TRDIOD0 input capture, pulse output cutoff
0110B	Timer RD1	TRDIOD1 input capture, pulse output cutoff
0111B	DA0 Note 3	Real-time output
1000B	Timer input of timer array unit 0 channel 2 Notes 1 and 2	Delay counter, input pulse interval measurement, external event counter (Group E products only)
1001B	Timer input of timer array unit 0 channel 3 Notes 1 and 2	

Notes 1. To select the timer input of timer array unit 0 channel m as the link destination peripheral function, first set the operating clock for channel m to f_{CLK} using timer clock select register 0 (TPS0), and then set the timer output used for channel m to an event input signal from the ELC using timer input select register 0 (TIS0).

2. Before selecting the timer input of timer array unit 0 channel m as the link destination peripheral function, set the noise filter of the corresponding link destination channel in the timer array unit 0 to OFF (set the TNFEN0m bit to 0) by using the noise filter enable register 1 (NFEN1).

3. When entering the STOP status while the real-time output event mode for D/A conversion is enabled, disable linking of ELC events before entering STOP.

<R> **Remark** m = 0 to 3

20.2.2 Timer input select register 0

The timer array unit channels 0 to 3 change the event input from the ELC to the source for each channel. For details, see **6.3.8 Timer input select register 0 (TIS0)**.

20.2.3 A/D converter mode register 1 (ADM1)

This register has the function of specifying the A/D conversion trigger. A/D conversion is performed by two-bit control and using the signal by the TAU0 channel 1, event signal by the ELC, or pretimed signal/alarm interrupt signal as triggers. For details, see **12.3.3 A/D converter mode register 1 (ADM1)**.

20.2.4 D/A converter mode register (DAM)

This register has the real-time output function, which starts D/A conversion using the event input from the ELC as triggers. For details, see **13.3.3 D/A converter mode register (DAM)**.

20.3 Operation

The path for using an event signal generated by a peripheral function as an interrupt request to the interrupt control circuit is independent from the path for using it as an ELC event. Therefore, each event signal can be used as an event signal for operation of an event-receiving peripheral function, regardless of interrupt control.

In addition, event link operation can be performed without being influenced by the presence or absence of a CPU clock supply. However, the operating clock of a peripheral function needs to be supplied and be in an operational state.

<R> Figure 20-3 shows the relationship between interrupt handling and ELC. The figure shows an example of an interrupt request status flag and a peripheral function possessing the enable bits that control enabling/disabling of such interrupts.

A peripheral function which receives an event from the ELC will perform the operation corresponding to the event-receiving peripheral function after reception of an event (see **Table 20-3 Correspondence Between Values Set to ELSELRn (n = 00 to 25) Registers and Operation of Link Destination Peripheral Functions at Reception**).

Figure 20-3. Relationship Between Interrupt Handling and ELC

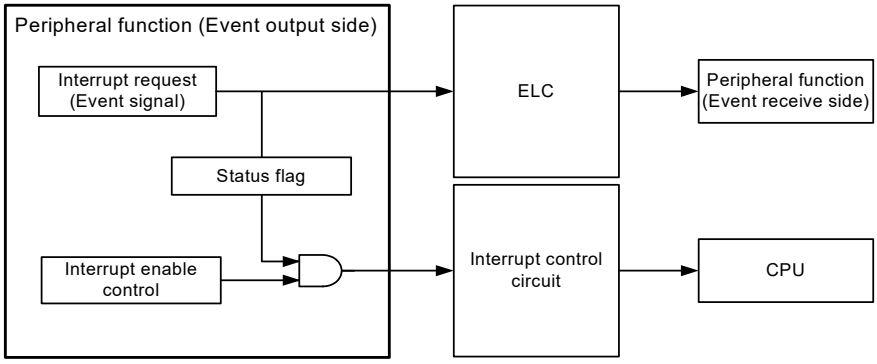

CHAPTER 21 INTERRUPT FUNCTIONS

If different processing is required during the execution of one program, interrupts provide a convenient and fast way of switching to another program to handle that processing.

After processing at the branch destination is completed, execution returns to the point where the original program was suspended.

The number of interrupt sources differs, depending on the product.

		RL78/F13 (LIN)					RL78/F13 (CAN and LIN)				RL78/F14						
		Group A			Group B		Group C				Group D				Group E		
		20 pins	30/32 pins	48/64 pins	48 pins	64/80 pins	30 pins	32 pins	48 pins	64/80 pins	30 pins	32 pins	48 pins	64/80 pins	48 pins	64 pins	80/100 pins
Maskable interrupts	External	7	8	10	12	13	9	9	13	14	9	9	13	14	14	15	16
	Internal	26	26	26	35	35	39	40	40	40	40	41	41	41	48	48	48

Remark Group A: RL78/F13 (LIN incorporated) products with 20, 30, 32, 48, or 64 pins and 16 Kbytes to 64 Kbytes of code flash memory

Group B: RL78/F13 (LIN incorporated) products with 48 or 64 pins and 96 Kbytes to 128 Kbytes of code flash memory or with 80 pins and 64 Kbytes to 128 Kbytes of code flash memory

Group C: RL78/F13 (CAN incorporated) products with 30, 32, 48, 64, or 80 pins and 32 Kbytes to 128 Kbytes of code flash memory

Group D: RL78/F14 products with 30, 32, 48, 64, or 80 pins and 48 Kbytes to 96 Kbytes of code flash memory

Group E: RL78/F14 products with 48, 64, or 80 pins and 128 Kbytes to 256 Kbytes of code flash memory or with 100 pins and 64 Kbytes to 256 Kbytes of code flash memory

21.1 Interrupt Function Types

The following two types of interrupt functions are used.

(1) Maskable interrupts

These interrupts undergo mask control. Maskable interrupts can be divided into four priority groups by setting the priority specification flag registers (PR00L, PR00H, PR01L, PR01H, PR02L, PR02H, PR03L, PR10L, PR10H, PR11L, PR11H, PR12L, PR12H, PR13L).

Multiple interrupt servicing can be applied to low-priority interrupts when high-priority interrupts are generated. If two or more interrupt requests, each having the same priority, are simultaneously generated, then they are processed according to the default priority of vectored interrupt servicing. For the default priority, see **Table 21-1**.

A standby release signal is generated and STOP, HALT, and SNOOZE modes are released.

External interrupt requests and internal interrupt requests are provided as maskable interrupts.

(2) Software interrupt

This is a vectored interrupt generated by executing the BRK instruction. It is acknowledged even when interrupts are disabled. The software interrupt does not undergo interrupt priority control.

21.2 Interrupt Sources and Configuration

Interrupt sources include maskable interrupts and software interrupts. In addition, they also have up to seven reset sources (see **Table 21-1**). The vector codes that store the program start address when branching due to the generation of a reset or various interrupt requests are two bytes each, so interrupts jump to a 64 K address of 00000H to 0FFFFH.

Table 21-1. Interrupt Source List (1/4)

Interrupt Type	Default Priority Note 1	Interrupt Source		Internal/ External	Vector Table Address	Basic Configuration Type Note 2	80, 100-pin	64-pin	48-pin	32-pin	30-pin	20-pin
		Name	Trigger									
Maskable	0	INTWDTI	Watchdog timer interval Note 3 (75% of overflow time+1/2f_{WDT})	Internal	0004H	(A)	√	√	√	√	√	√
	1	INTLVI	Voltage detection Note 4		0006H		√	√	√	√	√	√
	2	INTP0	Pin input edge detection 0	External	0008H	(B)	√	√	√	√	√	√
	3	INTP1	Pin input edge detection 1		000AH		√	√	√	√	√	√
	4	INTP2	Pin input edge detection 2		000CH		√	√	√	√	√	√
	5	INTP3	Pin input edge detection 3		000EH		√	√	√	√	√	√
	6	INTP4 Note 7	Pin input edge detection 4		0010H		√	√	√	√	√	√
		INTSPM Note 7	Stack pointer overflow/underflow	Internal		(A)						
	7	INTP5 Note 8	Pin input edge detection 5	External	0012H	(B)	√	√	√	√	√	–
		INTCMP0 Note 8	Comparator detection 0	Internal		(A)	√ Note 5	√ Note 5	√ Note 5	√ Note 5	√ Note 5	–
	8	INTP13 Note 9	Pin input edge detection 13	External	0014H	(B)	√ Note 6	–	–	–	–	–
		INTCLM Note 9	Main clock or PLL clock stop	Internal		(A)	√	√	√	√	√	√
	9	INTST0/ INTCSI00/ INTIIC00	UART0 transmission transfer end or buffer empty interrupt/CSI00 transfer end or buffer empty interrupt/IIC00 transfer end		0016H		√	√	√	√	√	√
	10	INTSR0/ INTCSI01/ INTIIC01	UART0 reception transfer end/CSI01 transfer end or buffer empty interrupt/IIC01 transfer end		0018H		√	√	√	√	√	√
	11	INTTRD0	Timer RD0 input capture, compare match, overflow, underflow interrupt		001AH		√	√	√	√	√	√
	12	INTTRD1	Timer RD1 input capture, compare match, overflow, underflow interrupt		001CH		√	√	√	√	√	√
	13	INTTRJ0	Timer RJ0		001EH		√	√	√	√	√	√
	14	INTRAM	RAM 1-bit correction/2-bit error detection		0020H		√	√	√	√	√	√
	15	INTLIN0TRM	LIN0 transmission		0022H		√	√	√	√	√	√
	16	INTLIN0RVC	LIN0 reception end		0024H		√	√	√	√	√	√

Notes 1. The default priority determines the sequence of interrupts if two or more maskable interrupts occur simultaneously. Zero indicates the highest priority and 55 indicates the lowest priority.

2. Basic configuration types (A) to (F) correspond to (A) to (F) in Figure 21-1.

3. When bit 7 (WDTINT) of the option byte (000C0H) is set to 1.

4. When bit 7 (LVIMD) of the voltage detection level register (LVIS) is cleared to 0.

5. Provided only in products of Groups D and E.

6. Provided only in Group E products.

7. To determine whether the actual interrupt source is INTP4 or INTSPM, read the INTFLG00 bit in the INTFLG0 register or the stack pointer.

8. To determine whether the actual interrupt source is INTP5 or INTCMP0, read the INTFLG01 and INTFLG06 bits in the INTFLG0 register.

9. To determine whether the actual interrupt source is INTP13 or INTCLM, read the INTFLG07 bit in the INTFLG0 register and SELPLLS bit in the PLLSTS register.

<R>

Table 21-1. Interrupt Source List (2/4)

Interrupt Type	Default Priority Note 1	Interrupt Source		Internal/ External	Vector Table Address	Basic Configuration Type Note 2	80, 100-pin	64-pin	48-pin	32-pin	30-pin	20-pin
		Name	Trigger									
Maskable	17	INTLIN0STA/ INTLIN0	LIN0 reception status/LIN0 interrupt	Internal	0026H	(A)	√	√	√	√	√	√
	18	INTIICA0	IICA0 transfer end		0028H		√	√ Note 3	√ Note 3	√ Note 3	–	–
	19	INTP8 Note 5	Pin input edge detection 8	External	002AH	(B)	√	√ Note 3	√ Note 3	–	–	–
		INTRTC Note 5	RTC pretimed signal or alarm match detection	Internal		(A)	√	√	√	√	√	√
	20	INTTM00	End of TAU0 channel 0 count/capture		002CH		√	√	√	√	√	√
	21	INTTM01	End of TAU0 channel 1 count/capture		002EH		√	√	√	√	√	√
	22	INTTM02	End of TAU0 channel 2 count/capture		0030H		√	√	√	√	√	√
	23	INTTM03	End of TAU0 channel 3 count/capture		0032H		√	√	√	√	√	√
	24	INTAD	End of A/D conversion		0034H		√	√	√	√	√	√
	25	INTP6 Note 4	Pin input edge detection 6	External	0036H	(B)	√	√	√	–	–	–
		INTTM11H	Upper 8-bit interval timer interrupt of TAU1 channel 1 (when 8-bit timer function is selected)	Internal		(A)	√	√ Note 3	√ Note 3	√ Note 3	√ Note 3	–
	26	INTP7 Note 4	Pin input edge detection 7	External	0038H	(B)	√	√	√	–	–	–
		INTTM13H	Upper 8-bit interval timer interrupt of TAU1 channel 3 (when 8-bit timer function is selected)	Internal		(A)	√	√ Note 3	√ Note 3	√ Note 3	√ Note 3	–
	27	INTP9 Note 4	Pin input edge detection 9	External	003AH	(B)	√	√ Note 3	√ Note 3	–	–	–
		INTTM01H	Upper 8-bit interval timer interrupt of TAU0 channel 1 (when 8-bit timer function is selected)	Internal		(A)	√	√	√	√	√	√
	28	INTP10 Note 4	Pin input edge detection 10	External	003CH	(B)	√	√ Note 3	–	–	–	–
		INTTM03H	Upper 8-bit interval timer interrupt of TAU0 channel 3 (when 8-bit timer function is selected)	Internal		(A)	√	√	√	√	√	√
	29	INTST1/ INTCSI10/ INTIIC10	UART1 transmission transfer end or buffer empty interrupt/CSI10 transfer end or buffer empty interrupt/IIC10 transfer end		003EH		√	√ Note 3	√ Note 3	√ Note 3	√ Note 3	–

Notes 1. The default priority determines the sequence of interrupts if two or more maskable interrupts occur simultaneously. Zero indicates the highest priority and 55 indicates the lowest priority.

2. Basic configuration types (A) to (F) correspond to (A) to (F) in Figure 21-1.

3. Not provided in Group A products.

4. Whether the interrupt source is the detection of edge input on a pin or a TAU count end/capture end interrupt is not detectable.

<R> **5.** To determine whether the actual interrupt source is INTP8 or INTRTC, read the INTFLG02 bit in the INTFLG0 register or the WAFG and RIFG bits in the RTCC1 register.

<R>

Table 21-1. Interrupt Source List (3/4)

Interrupt Type	Default Priority Note 1	Interrupt Source		Internal/ External	Vector Table Address	Basic Configuration Type Note 2	80, 100-pin	64-pin	48-pin	32-pin	30-pin	20-pin
		Name	Trigger									
Maskable	30	INTSR1/ INTCSI11/ INTIIC11	UART1 reception transfer end/CSI11 transfer end or buffer empty interrupt/IIC11 transfer end	Internal	0040H	(A)	√	√ Note 3	√ Note 3	√ Notes 3, 7	√ Notes 3, 7	–
	31	INTTM04	End of TAU0 channel 4 count/capture		0042H		√	√	√	√	√	√
	32	INTTM05	End of TAU0 channel 5 count/capture		0044H		√	√	√	√	√	√
	33	INTTM06	End of TAU0 channel 6 count/capture		0046H		√	√	√	√	√	√
	34	INTTM07	End of TAU0 channel 7 count/capture		0048H		√	√	√	√	√	√
	35	INTP11 Note 6	Pin input edge detection 11	External	004AH	(B)	√	√ Note 3	–	–	–	–
		INTLIN0WUP Note 6	LIN0 reception pin input			(E)	√	√	√	√	√	√
	36	INTKR	Key interrupt detection		004CH	(C)	√	√	√	√	√	√
	37	INTCAN0ERR	CAN0 channel error	Internal	004EH	(A)	√ Note 4	√ Note 4	√ Note 4	√ Note 4	√ Note 4	–
	38	INTCAN0WUP	CAN0 wakeup	External	0050H	(D)	√ Note 4	√ Note 4	√ Note 4	√ Note 4	√ Note 4	–
	39	INTCAN0CFR	CAN0 transmit/receive FIFO receive	Internal	0052H	(A)	√ Note 4	√ Note 4	√ Note 4	√ Note 4	√ Note 4	–
	40	INTCAN0TRM	CAN0 channel transmit		0054H		√ Note 4	√ Note 4	√ Note 4	√ Note 4	√ Note 4	–
	41	INTCANGRFR	CAN global receive FIFO		0056H		√ Note 4	√ Note 4	√ Note 4	√ Note 4	√ Note 4	–
	42	INTCANGERR	CAN global error		0058H		√ Note 4	√ Note 4	√ Note 4	√ Note 4	√ Note 4	–
	43	INTTM10	End of TAU1 channel 0 count/capture		005AH		√	√ Note 3	√ Note 3	√ Note 3	√ Note 3	–
	44	INTTM11	End of TAU1 channel 1 count/capture		005CH		√	√ Note 3	√ Note 3	√ Note 3	√ Note 3	–
	45	INTTM12	End of TAU1 channel 2 count/capture		005EH		√	√ Note 3	√ Note 3	√ Note 3	√ Note 3	–
	46	INTTM13	End of TAU1 channel 3 count/capture		0060H		√	√ Note 3	√ Note 3	√ Note 3	√ Note 3	–
	47	INTFL	Reserved Note 5		0062H		√	√	√	√	√	√

Notes 1. The default priority determines the sequence of interrupts if two or more maskable interrupts occur simultaneously. Zero indicates the highest priority and 55 indicates the lowest priority.

2. Basic configuration types (A) to (F) correspond to (A) to (F) in Figure 21-1.

3. Not provided in Group A products.

4. Not provided in products of Groups A and B.

5. Do not use this interrupt.

6. Select INTP11 and INTLIN0WUP by the ISC2 bit in the ISC register.

7. Only INTSR1 is provided.

<R>

Table 21-1. Interrupt Source List (4/4)

Interrupt Type	Default Priority Note 1	Interrupt Source		Internal/ External	Vector Table Address	Basic Configuration Type Note 2	80, 100-pin	64-pin	48-pin	32-pin	30-pin	20-pin
		Name	Trigger									
	48	INTP12 Note 6	Pin input edge detection 12	External	0064H	(B)	√ Note 5	√ Note 5	–	–	–	–
		INTLIN1WUP Note 6	LIN1 reception pin input			(E)	√ Note 5	√ Note 5	√ Note 5	–	–	–
	49	INTLIN1TRM	LIN1 transmission	Internal	0066H	(A)	√ Note 5	√ Note 5	√ Note 5	–	–	–
	50	INTLIN1RVC	LIN1 reception end		0068H		√ Note 5	√ Note 5	√ Note 5	–	–	–
	51	INTLIN1STA/ INTLIN1	LIN1 reception status/LIN1 interrupt		006AH		√ Note 5	√ Note 5	√ Note 5	–	–	–
	52	INTTM14	End of TAU1 channel 4 count/capture		006CH		√ Note 5	√ Note 5	√ Note 5	–	–	–
	53	INTTM15	End of TAU1 channel 5 count/capture		006EH		√ Note 5	√ Note 5	√ Note 5	–	–	–
	54	INTTM16	End of TAU1 channel 6 count/capture		0070H		√ Note 5	√ Note 5	√ Note 5	–	–	–
	55	INTTM17	End of TAU1 channel 7 count/capture		0072H		√ Note 5	√ Note 5	√ Note 5	–	–	–
Software	–	BRK	Execution of BRK instruction	–	007EH	(F)	√	√	√	√	√	√
Reset	–	RESET	$\overline{\text{RESET}}$ pin input	–	0000H	–	√	√	√	√	√	√
		POR	Power-on-reset				√	√	√	√	√	√
		LVD	Voltage detection Note 3				√	√	√	√	√	√
		WDT	Overflow of watchdog timer				√	√	√	√	√	√
		TRAP	Execution of illegal instruction Note 4				√	√	√	√	√	√
		IAW	Illegal-memory access				√	√	√	√	√	√
		CLM	Main clock oscillation stop				√	√	√	√	√	√

Notes 1. The default priority determines the sequence of interrupts if two or more maskable interrupts occur simultaneously. Zero indicates the highest priority and 55 indicates the lowest priority.

2. Basic configuration types (A) to (F) correspond to (A) to (F) in Figure 21-1.

3. When bit 7 (LVIMD) of the voltage detection level register (LVIS) is set to 1.

4. When the instruction code in FFH is executed.
Reset by the illegal instruction execution not issued by emulation with the in-circuit emulator or on-chip debug emulator.

5. Provided only in Group E products.

6. Select INTP12 and INTLIN1WUP by the ISC3 bit in the ISC register.

Figure 21-1. Basic Configuration of Interrupt Function (1/3)

(A) Internal maskable interrupt

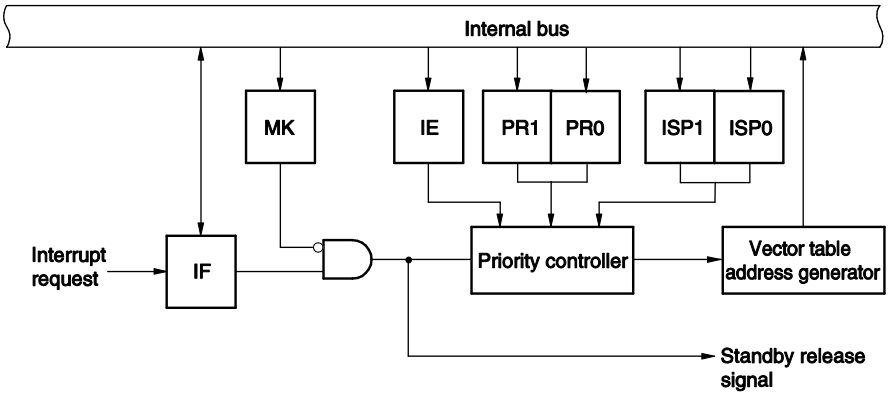

(B) External maskable interrupt (INTPm)

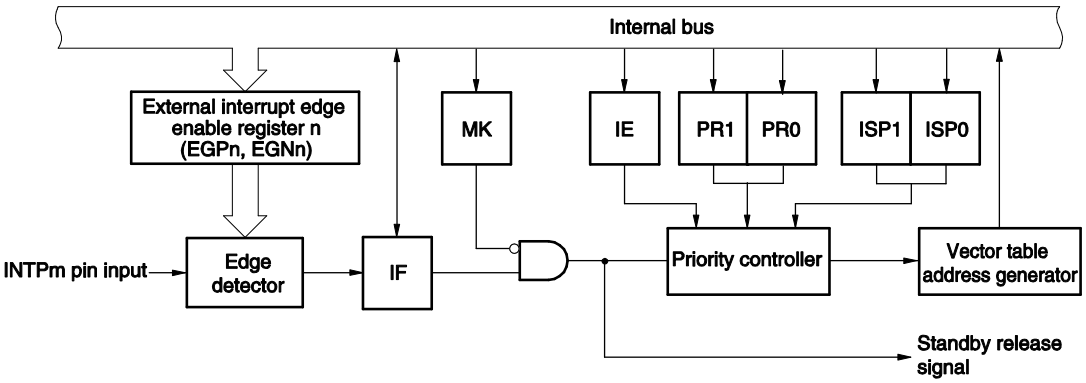

IF: Interrupt request flag
IE: Interrupt enable flag
ISP0: In-service priority flag 0
ISP1: In-service priority flag 1
MK: Interrupt mask flag
PR0: Priority specification flag 0
PR1: Priority specification flag 1

Remark n = 0, 1

20-pin:	m = 0 to 4
30-, 32-pin:	m = 0 to 5
48-pin:	m = 0 to 9 Note 1
64-pin:	m = 0 to 12 Notes 1, 2
80-, 100-pin:	m = 0 to 13 Note 2

Notes 1. Group A products: m = 0 to 7
2. Products of Groups B to D: m = 0 to 11

Figure 21-1. Basic Configuration of Interrupt Function (2/3)

(C) External maskable interrupt (INTKR)

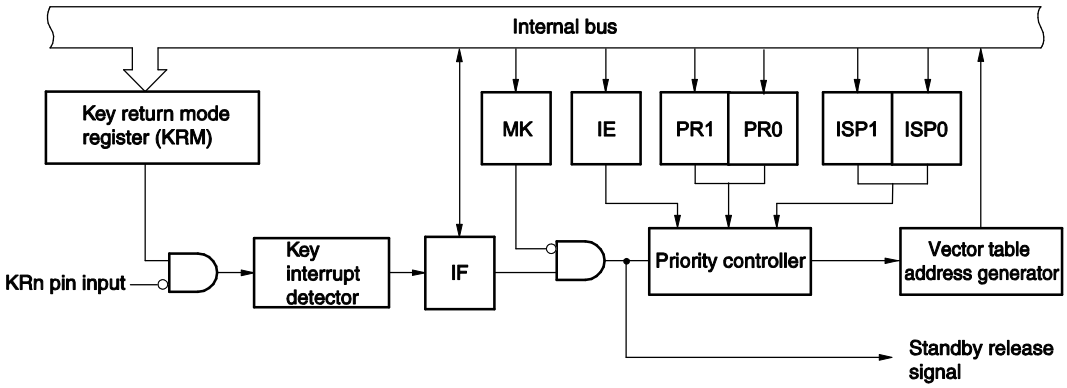

(D) External maskable interrupt (CAN wake-up)

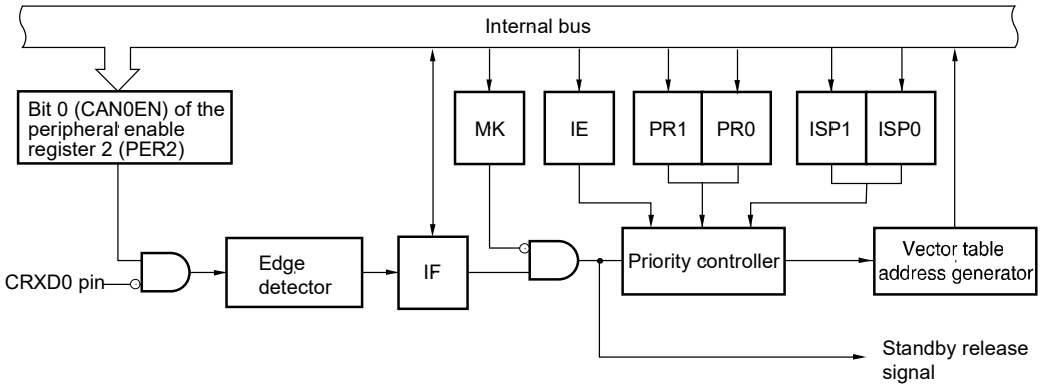

IF: Interrupt request flag
IE: Interrupt enable flag
ISP0: In-service priority flag 0
ISP1: In-service priority flag 1
MK: Interrupt mask flag
PR0: Priority specification flag 0
PR1: Priority specification flag 1

Remark 20-pin: n = 0, 1
30-pin: n = 0 to 7
32-pin: n = 0 to 5
48-, 64-, 80-, 100-pin: n = 0 to 7

Figure 21-1. Basic Configuration of Interrupt Function (3/3)

(E) External maskable interrupt (LINx wake-up)

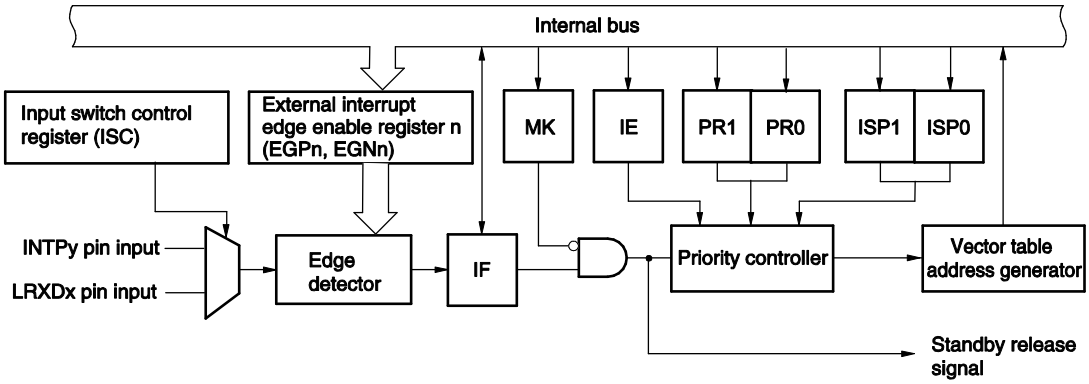

(F) Software interrupt

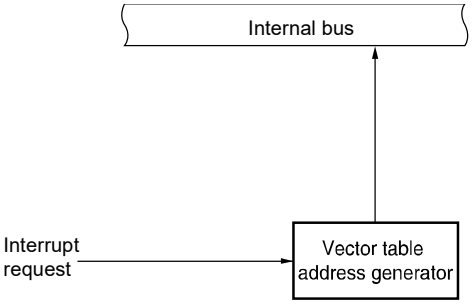

IF: Interrupt request flag
IE: Interrupt enable flag
ISP0: In-service priority flag 0
ISP1: In-service priority flag 1
MK: Interrupt mask flag
PR0: Priority specification flag 0
PR1: Priority specification flag 1

Remark n = 0, 1
x = 0, 1 Note
y = 11, 12 Note

Note Except in Group E products, x = 0 and y = 11.

21.3 Registers Controlling Interrupt Functions

The following 9 types of registers are used to control the interrupt functions.

- Interrupt request flag registers (IF0L, IF0H, IF1L, IF1H, IF2L, IF2H, IF3L)
- Interrupt mask flag registers (MK0L, MK0H, MK1L, MK1H, MK2L, MK2H, MK3L)
- Priority specification flag registers (PR00L, PR00H, PR01L, PR01H, PR02L, PR02H, PR03L, PR10L, PR10H, PR11L, PR11H, PR12L, PR12H, PR13L)
- External interrupt rising edge enable registers (EGP0, EGP1)
- External interrupt falling edge enable registers (EGN0, EGN1)
- Interrupt source determination flag register 0 (INTFLG0)
- Interrupt mask register (INTMSK)
- Input switch control register (ISC)
- Program status word (PSW)

Table 21-2 shows a list of interrupt request flags, interrupt mask flags, and priority specification flags corresponding to interrupt request sources.

Table 21-2. Flags Corresponding to Interrupt Request Sources (1/4)

Interrupt Source	Interrupt Request Flag		Interrupt Mask Flag		Priority Specification Flag		100-pin	80-pin	64-pin	48-pin	32-pin	30-pin	20-pin
		Register		Register		Register							
INTWDTI	WDTIIF	IF0L	WDTIMK	MK0L	WDTIPR0, WDTIPR1	PR00L, PR10L	√	√	√	√	√	√	√
INTLVI	LVIIF		LVIMK		LVIPR0, LVIPR1		√	√	√	√	√	√	√
INTP0	PIF0		PMK0		PPR00, PPR10		√	√	√	√	√	√	√
INTP1	PIF1		PMK1		PPR01, PPR11		√	√	√	√	√	√	√
INTP2	PIF2		PMK2		PPR02, PPR12		√	√	√	√	√	√	√
INTP3	PIF3		PMK3		PPR03, PPR13		√	√	√	√	√	√	√
INTP4	PIF4		PMK4		PPR04, PPR14		√	√	√	√	√	√	√
INTSPM	SPMIF		SPMMK		SPMPR0, SPMPR1		√	√	√	√	√	√	√
INTP5	PIF5		PMK5		PPR05, PPR15		√	√	√	√	√	√	–
INTCMP0	CMPIF0		CMPMK0		CMPPR00, CMPPR10		√ Note	√ Note	√ Note	√ Note	√ Note	√ Note	–

Note Provided only in products of Groups D and E.

<R> **Table 21-2. Flags Corresponding to Interrupt Request Sources (2/4)**

Interrupt Source	Interrupt Request Flag		Interrupt Mask Flag		Priority Specification Flag		100-pin	80-pin	64-pin	48-pin	32-pin	30-pin	20-pin
		Register		Register		Register							
INTP13	PIF13	IF0H	PMK13	MK0H	PPR013, PPR113	PR00H, PR10H	√ Note	√ Note	–	–	–	–	–
INTCLM	CLMIF		CLMMK		CLMPR0, CLMPR1		√	√	√	√	√	√	√
INTST0	STIF0		STMK0		STPR00, STPR10		√	√	√	√	√	√	√
INTCSI00	CSIIF00		CSIMK00		CSIPR000, CSIPR100		√	√	√	√	√	√	√
INTIIC00	IICIF00		IICMK00		IICPR000, IICPR100		√	√	√	√	√	√	√
INTSR0	SRIF0		SRMK0		SRPR00, SRPR10		√	√	√	√	√	√	√
INTCSI01	CSIIF01		CSIMK01		CSIPR001, CSIPR101		√	√	√	√	√	√	√
INTIIC01	IICIF01		IICMK01		IICPR001, IICPR101		√	√	√	√	√	√	√
INTTRD0	TRDIF0		TRDMK0		TRDPR00, TRDPR10		√	√	√	√	√	√	√
INTTRD1	TRDIF1		TRDMK1		TRDPR01, TRDPR11		√	√	√	√	√	√	√
INTTRJ0	TRJIF0		TRJMK0		TRJPR00, TRJPR10		√	√	√	√	√	√	√
INTRAM	RAMIF		RAMMK		RAMPR0, RAMPR1		√	√	√	√	√	√	√
INTLIN0TRM	LIN0TRMIF		LIN0TRMMK		LIN0TRMPR0, LIN0TRMPR1		√	√	√	√	√	√	√

Cautions 1. If one of the interrupt sources INTST0, INTCSI00, and INTIIC00 is generated, bit 1 of the IF0H register is set to 1. Bit 1 of the MK0H, PR00H, and PR10H registers supports these three interrupt sources.

2. If one of the interrupt sources INTSR0, INTCSI01, and INTIIC01 is generated, bit 2 of the IF0H register is set to 1. Bit 2 of the MK0H, PR00H, and PR10H registers supports these three interrupt sources.

Note Provided only in Group E products.

<R> **Table 21-2. Flags Corresponding to Interrupt Request Sources (3/4)**

Interrupt Source	Interrupt Request Flag	Register	Interrupt Mask Flag	Register	Priority Specification Flag	Register	100-pin	80-pin	64-pin	48-pin	32-pin	30-pin	20-pin
INTLIN0RVC	LIN0RVCIF	IF1L	LIN0RVCMK	MK1L	LIN0RVCPR0, LIN0RVCPR1	PR01L, PR11L	√	√	√	√	√	√	√
INTLIN0STA	LIN0STAIF		LIN0STAMK		LIN0STAPR0, LIN0STAPR1		√	√	√	√	√	√	√
INTLIN0	LIN0IF		LIN0MK		LIN0PR0, LIN0PR1		√	√	√	√	√	√	√
INTIICA0	IICAIF0		IICAMK0		IICAPR00, IICAPR10		√	√	√ Note	√ Note	√ Note	–	–
INTP8	PIF8		PMK8		PPR08, PPR18		√	√	√ Note	√ Note	–	–	–
INTRTC	RTCIF		RTCMK		RTCPR0, RTCPR1		√	√	√	√	√	√	√
INTTM00	TMIF00		TMMK00		TMPR000, TMPR100		√	√	√	√	√	√	√
INTTM01	TMIF01		TMMK01		TMPR001, TMPR101		√	√	√	√	√	√	√
INTTM02	TMIF02		TMMK02		TMPR002, TMPR102		√	√	√	√	√	√	√
INTTM03	TMIF03		TMMK03		TMPR003, TMPR103		√	√	√	√	√	√	√
INTAD	ADIF	IF1H	ADMK	MK1H	ADPR0, ADPR1	PR01H, PR11H	√	√	√	√	√	√	√
INTP6	PIF6		PMK6		PPR06, PPR16		√	√	√	√	–	–	–
INTTM11H	TMIF11H		TMMK11H		TMPR011H, TMPR111H		√	√	√ Note	√ Note	√ Note	√ Note	–
INTP7	PIF7		PMK7		PPR07, PPR17		√	√	√	√	–	–	–
INTTM13H	TMIF13H		TMMK13H		TMPR013H, TMPR113H		√	√	√ Note	√ Note	√ Note	√ Note	–
INTP9	PIF9		PMK9		PPR09, PPR19		√	√	√ Note	√ Note	–	–	–
INTTM01H	TMIF01H		TMMK01H		TMPR001H, TMPR101H		√	√	√	√	√	√	√
INTP10	PIF10		PMK10		PPR010, PPR110		√	√	√ Note	–	–	–	–
INTTM03H	TMIF03H		TMMK03H		TMPR003H, TMPR103H		√	√	√	√	√	√	√
INTST1	STIF1		STMK1		STPR01, STPR11		√	√	√ Note	√ Note	√	√	–
INTCSI10	CSIIF10		CSIMK10		CSIPR010, CSIPR110		√	√	√ Note	√ Note	√ Note	√ Note	–
INTIIC10	IICIF10		IICMK10		IICPR010, IICPR110		√	√	√ Note	√ Note	√ Note	√ Note	–
INTSR1	SRIF1		SRMK1		SRPR01, SRPR11		√	√	√ Note	√ Note	√	√	–
INTCSI11	CSIIF11		CSIMK11		CSIPR011, CSIPR111		√	√	√ Note	√ Note	–	–	–
INTIIC11	IICIF11		IICMK11		IICPR011, IICPR111		√	√	√ Note	√ Note	–	–	–
INTTM04	TMIF04		TMMK04		TMPR004, TMPR104		√	√	√	√	√	√	√

(**Cautions** and **Note** are listed on the next page.)

Cautions 1. Do not use INTP6 and channel 1 of TAU1 (at 8-bit timer operation) at the same time because they share flags for the interrupt request sources. Whether the interrupt source condition that is satisfied is INTP6 or channel 1 of TAU1, bit 1 of the IF1H register is set to 1. Bit 1 of the MK1H, PR01H, and PR11H registers supports these two interrupt sources.

2. Do not use INTP7 and channel 3 of TAU1 (at 8-bit timer operation) at the same time because they share flags for the interrupt request sources. Whether the interrupt source condition that is satisfied is INTP7 or channel 3 of TAU1, bit 2 of the IF1H register is set to 1. Bit 2 of the MK1H, PR01H, and PR11H registers supports these two interrupt sources.

<R> **3. Do not use INTP9 and channel 1 of TAU0 (at 8-bit timer operation) at the same time because they share flags for the interrupt request sources. Whether the interrupt source condition that is satisfied is INTP9 or channel 1 of TAU0, bit 3 of the IF1H register is set to 1. Bit 3 of the MK1H, PR01H, and PR11H registers supports these two interrupt sources.**

<R> **4. Do not use INTP10 and channel 3 of TAU0 (at 8-bit timer operation) at the same time because they share flags for the interrupt request sources. Whether the interrupt source condition that is satisfied is INTP10 or channel 3 of TAU0, bit 4 of the IF1H register is set to 1. Bit 4 of the MK1H, PR01H, and PR11H registers supports these two interrupt sources.**

5. If one of the interrupt sources INTST1, INTCSI10, and INTIIC10 is generated, bit 5 of the IF1H register is set to 1. Bit 5 of the MK1H, PR01H, and PR11H registers supports these three interrupt sources.

6. If one of the interrupt sources INTSR1, INTCSI11, and INTIIC11 is generated, bit 6 of the IF1H register is set to 1. Bit 6 of the MK1H, PR01H, and PR11H registers supports these three interrupt sources.

Note Not provided in Group A products.

<R>

Table 21-2. Flags Corresponding to Interrupt Request Sources (4/4)

Interrupt Source	Interrupt Request Flag		Interrupt Mask Flag		Priority Specification Flag		100-pin	80-pin	64-pin	48-pin	32-pin	30-pin	20-pin
		Register		Register		Register							
INTTM05	TMIF05	IF2L	TMMK05	MK2L	TMPR005, TMPR105	PR02L, PR12L	√	√	√	√	√	√	√
INTTM06	TMIF06		TMMK06		TMPR006, TMPR106		√	√	√	√	√	√	√
INTTM07	TMIF07		TMMK07		TMPR007, TMPR107		√	√	√	√	√	√	√
INTP11	PIF11		PMK11		PPR011, PPR111		√	√	√ Note 1	–	–	–	–
INTLIN0WUP	LIN0WUPIF		LIN0WUPMK		LIN0WUPPR0, LIN0WUPPR1		√	√	√	√	√	√	√
INTKR	KRIF		KRMK		KRPR0, KRPR1		√	√	√	√	√	√	√
INTCAN0ERR	CAN0ERRIF		CAN0ERRMK		CAN0ERRPR0, CAN0ERRPR1		√	√ Note 2	√ Note 2	√ Note 2	√ Note 2	√ Note 2	–
INTCAN0WUP	CAN0WUPIF		CAN0WUPMK		CAN0WUPPR0, CAN0WUPPR1		√	√ Note 2	√ Note 2	√ Note 2	√ Note 2	√ Note 2	–
INTCAN0CFR	CAN0CFRIF		CAN0CFRMK		CAN0CFRPR0, CAN0CFRPR1		√	√ Note 2	√ Note 2	√ Note 2	√ Note 2	√ Note 2	–
INTCAN0TRM	CAN0TRMIF	IF2H	CAN0TRMMK	MK2H	CAN0TRMPR0, CAN0TRMPR1	PR02H, PR12H	√	√ Note 2	√ Note 2	√ Note 2	√ Note 2	√ Note 2	–
INTCANGRFR	CANGRFRIF		CANGRFRMK		CANGRFRPR0, CANGRFRPR1		√	√ Note 2	√ Note 2	√ Note 2	√ Note 2	√ Note 2	–
INTCANGERR	CANGERRIF		CANGERRMK		CANGERRPR0, CANGERRPR1		√	√ Note 2	√ Note 2	√ Note 2	√ Note 2	√ Note 2	–
INTTM10	TMIF10		TMMK10		TMPR010, TMPR110		√	√	√ Note 1	√ Note 1	√ Note 2	√ Note 2	–
INTTM11	TMIF11		TMMK11		TMPR011, TMPR111		√	√	√ Note 1	√ Note 1	√ Note 2	√ Note 2	–
INTTM12	TMIF12		TMMK12		TMPR012, TMPR112		√	√	√ Note 1	√ Note 1	√ Note 2	√ Note 2	–
INTTM13	TMIF13		TMMK13		TMPR013, TMPR113		√	√	√ Note 1	√ Note 1	√ Note 2	√ Note 2	–
INTFL	FLIF		FLMK		FLPR0, FLPR1		√	√	√	√	√	√	√
INTP12	PIF12	IF3L	PMK12	MK3L	PPR012, PPR112	PR03L, PR13L	√	√ Note 3	√ Note 3	–	–	–	–
INTLIN1WUP	LIN1WUPIF		LIN1WUPMK		LIN1WUPPR0, LIN1WUPPR1		√	√ Note 3	√ Note 3	√ Note 3	–	–	–
INTLIN1TRM	LIN1TRMIF		LIN1TRMMK		LIN1TRMPR0, LIN1TRMPR1		√	√ Note 3	√ Note 3	√ Note 3	–	–	–
INTLIN1RVC	LIN1RVCIF		LIN1RVCMK		LIN1RVCPR0, LIN1RVCPR1		√	√ Note 3	√ Note 3	√ Note 3	–	–	–
INTLIN1STA	LIN1STAIF		LIN1STAMK		LIN1STAPR0, LIN1STAPR1		√	√ Note 3	√ Note 3	√ Note 3	–	–	–
INTLIN1	LIN1IF		LIN1MK		LIN1PR0, LIN1PR1		√	√ Note 3	√ Note 3	√ Note 3	–	–	–
INTTM14	TMIF14		TMMK14		TMPR014, TMPR114		√	√ Note 3	√ Note 3	√ Note 3	–	–	–
INTTM15	TMIF15		TMMK15		TMPR015, TMPR115		√	√ Note 3	√ Note 3	√ Note 3	–	–	–
INTTM16	TMIF16		TMMK16		TMPR016, TMPR116		√	√ Note 3	√ Note 3	√ Note 3	–	–	–
INTTM17	TMIF17		TMMK17		TMPR017, TMPR117		√	√ Note 3	√ Note 3	√ Note 3	–	–	–

(**Notes** are listed on the next page.)

Notes 1. Not provided in Group A products.

2. Not provided in products of Groups A and B.

3. Provided only in Group E products.

21.3.1 Interrupt request flag registers (IF0L, IF0H, IF1L, IF1H, IF2L, IF2H, IF3L)

The interrupt request flags are set to 1 when the corresponding interrupt request is generated or an instruction is executed. They are cleared to 0 when an instruction is executed upon acknowledgment of an interrupt request or upon reset signal generation.

When an interrupt is acknowledged, the interrupt request flag is automatically cleared and then the interrupt routine is entered.

The IF0L, IF0H, IF1L, IF1H, IF2L, IF2H, and IF3L registers can be set by a 1-bit or 8-bit memory manipulation instruction. When the IF0L and IF0H registers, the IF1L and IF1H registers, and the IF2L and IF2H registers are combined to form 16-bit registers IF0, IF1, and IF2, they can be set by a 16-bit memory manipulation instruction.

Reset signal generation clears these registers to 00H.

Remark If an instruction that writes data to this register is executed, the number of instruction execution clocks increases by 2 clocks.

Figure 21-2. Format of Interrupt Request Flag Registers (IF0L, IF0H, IF1L, IF1H, IF2L, IF2H, IF3L) (1/2)

Address: FFFE0H After reset: 00H R/W

Symbol	<7>	<6>	<5>	<4>	<3>	<2>	<1>	<0>
IF0L	PIF5 CMPIF0	PIF4 SPMIF	PIF3	PIF2	PIF1	PIF0	LVIIF	WDTIIF

Address: FFFE1H After reset: 00H R/W

Symbol	<7>	<6>	<5>	<4>	<3>	<2>	<1>	<0>
IF0H	LIN0TRMIF	RAMIF	TRJIIF0	TRDIF1	TRDIF0	SRIF0 CSIIF01 IICIF01	STIF0 CSIIF00 IICIF00	CLMIF PIF13

Address: FFFE2H After reset: 00H R/W

Symbol	<7>	<6>	<5>	<4>	<3>	<2>	<1>	<0>
IF1L	TMIF03	TMIF02	TMIF01	TMIF00	PIF8 RTCIF	IICAIF0	LIN0STAIF LIN0IF	LIN0RVCIF

Address: FFFE3H After reset: 00H R/W

Symbol	<7>	<6>	<5>	<4>	<3>	<2>	<1>	<0>
IF1H	TMIF04	SRIF1 CSIIF11 IICIF11	STIF1 CSIIF10 IICIF10	PIF10 TMIF03H	PIF9 TMIF01H	PIF7 TMIF13H	PIF6 TMIF11H	ADIF

Address: FFFD0H After reset: 00H R/W

Symbol	<7>	<6>	<5>	<4>	<3>	<2>	<1>	<0>
IF2L	CAN0CFRIF	CAN0WUPIF	CAN0ERRIF	KRIF	PIF11 LIN0WUPIF	TMIF07	TMIF06	TMIF05

Figure 21-2. Format of Interrupt Request Flag Registers (IF0L, IF0H, IF1L, IF1H, IF2L, IF2H, IF3L) (2/2)

Address: FFFD1H After reset: 00H R/W

Symbol	<7>	<6>	5	<4>	<3>	<2>	<1>	<0>
IF2H	FLIF	TMIF13	TMIF12	TMIF11	TMIF10	CANGERRIF	CANGREFRIF	CAN0TRMIF

Address: FFFD2H After reset: 00H R/W

Symbol	<7>	<6>	<5>	<4>	<3>	<2>	<1>	<0>
IF3L	TMIF17	TMIF16	TMIF15	TMIF14	LIN1STAIF LIN1IF	LIN1RVCIF	LIN1TRMIF	PIF12 LIN1WUPIF

IFxx	Interrupt request flag
0	No interrupt request signal is generated
1	Interrupt request is generated, interrupt request status

Cautions 1. The above is the bit layout for the 100-pin. The available bits differ depending on the product. For details about the bits available for each product, see Table 21-2. Be sure to clear bits that are not available to 0.

2. When operating a timer, serial interface, or A/D converter after standby release, operate it once after clearing the interrupt request flag. An interrupt request flag may be set by noise.

3. When manipulating a flag of the interrupt request flag register, use a 1-bit memory manipulation instruction (CLR1). When describing in C language, use a bit manipulation instruction such as "IF0L.0 = 0;" or "_asm("clr1 IF0L, 0");" because the compiled assembler must be a 1-bit memory manipulation instruction (CLR1).

If a program is described in C language using an 8-bit memory manipulation instruction such as "IF0L &= 0xfe;" and compiled, it becomes the assembler of three instructions.

```
mov a, IF0L
and a, #0FEH
mov IF0L, a
```

In this case, even if the request flag of the another bit of the same interrupt request flag register (IF0L) is set to 1 at the timing between "mov a, IF0L" and "mov IF0L, a", the flag is cleared to 0 at "mov IF0L, a". Therefore, care must be exercised when using an 8-bit memory manipulation instruction in C language.

21.3.2 Interrupt mask flag registers (MK0L, MK0H, MK1L, MK1H, MK2L, MK2H, MK3L)

The interrupt mask flags are used to enable/disable the corresponding maskable interrupt servicing.

The MK0L, MK0H, MK1L, MK1H, MK2L, MK2H, and MK3L registers can be set by a 1-bit or 8-bit memory manipulation instruction. When the MK0L and MK0H registers, the MK1L and MK1H registers, and the MK2L and MK2H registers are combined to form 16-bit registers MK0, MK1, and MK2, they can be set by a 16-bit memory manipulation instruction.

Reset signal generation sets these registers to FFH.

Remark If an instruction that writes data to this register is executed, the number of instruction execution clocks increases by 2 clocks.

Figure 21-3. Format of Interrupt Mask Flag Registers (MK0L, MK0H, MK1L, MK1H, MK2L, MK2H, MK3L)

Address: FFFE4H After reset: FFH R/W

Symbol	<7>	<6>	<5>	<4>	<3>	<2>	<1>	<0>
MK0L	PMK5 CMPMK0	PMK4 SPMMK	PMK3	PMK2	PMK1	PMK0	LVIMK	WDTIMK

Address: FFFE5H After reset: FFH R/W

Symbol	<7>	<6>	<5>	<4>	<3>	<2>	<1>	<0>
MK0H	LIN0TRMMK	RAMMK	TRJMK0	TRDMK1	TRDMK0	SRMK0 CSIMK01 IICMK01	STMK0 CSIMK00 IICMK00	CLMMK PMK13

Address: FFFE6H After reset: FFH R/W

Symbol	<7>	<6>	<5>	<4>	<3>	<2>	<1>	<0>
MK1L	TMMK03	TMMK02	TMMK01	TMMK00	PMK8 RTCMK	IICAMK0	LIN0STAMK LIN0MK	LIN0RVCMK

Address: FFFE7H After reset: FFH R/W

Symbol	<7>	<6>	<5>	<4>	<3>	<2>	<1>	<0>
MK1H	TMMK04	SRMK1 CSIMK11 IICMK11	STMK1 CSIMK10 IICMK10	PMK10 TMMK03H	PMK9 TMMK01H	PMK7 TMMK13H	PMK6 TMMK11H	ADMK

Address: FFFD4H After reset: FFH R/W

Symbol	<7>	<6>	<5>	<4>	<3>	<2>	<1>	<0>
MK2L	CAN0CFRMK	CAN0WUPMK	CAN0ERRMK	KRMK	PMK11 LIN0WUPMK	TMMK07	TMMK06	TMMK05

Address: FFFD5H After reset: FFH R/W

Symbol	<7>	<6>	<5>	<4>	<3>	<2>	<1>	<0>
MK2H	FLMK	TMMK13	TMMK12	TMMK11	TMMK10	CANGERRMK	CANGRFRMK	CAN0TRMMK

Address: FFFD6H After reset: FFH R/W

Symbol	<7>	<6>	<5>	<4>	<3>	<2>	<1>	<0>
MK3L	TMMK17	TMMK16	TMMK15	TMMK14	LIN1STAMK LIN1MK	LIN1RVCMK	LIN1TRMMK	PMK12 LIN1WUPMK

MKxx	Interrupt servicing control
0	Interrupt servicing enabled
1	Interrupt servicing disabled

Caution The above is the bit layout for the 100-pin. The available bits differ depending on the product. For details about the bits available for each product, see Table 21-2. Be sure to set bits that are not available to 1.

21.3.3 Priority specification flag registers (PR00L, PR00H, PR01L, PR01H, PR02L, PR02H, PR03L, PR10L, PR10H, PR11L, PR11H, PR12L, PR12H, PR13L)

The priority specification flag registers are used to set the corresponding maskable interrupt priority level.

A priority level is set by using the PR0xy and PR1xy registers in combination (xy = 0L, 0H, 1L, 1H, 2L, 2H, or 3L).

The PR00L, PR00H, PR01L, PR01H, PR02L, PR02H, PR03L, PR10L, PR10H, PR11L, PR11H, PR12L, PR12H, and the PR13L registers can be set by a 1-bit or 8-bit memory manipulation instruction. If the PR00L and PR00H registers, the PR01L and PR01H registers, the PR02L and PR02H registers, the PR10L and PR10H registers, the PR11L and PR11H registers, and the PR12L and PR12H registers are combined to form 16-bit registers PR00, PR01, PR02, PR10, PR11, and PR12, they can be set by a 16-bit memory manipulation instruction.

Reset signal generation sets these registers to FFH.

Remark If an instruction that writes data to this register is executed, the number of instruction execution clocks increases by 2 clocks.

Figure 21-4. Format of Priority Specification Flag Registers (PR00L, PR00H, PR01L, PR01H, PR02L, PR02H, PR03L, PR10L, PR10H, PR11L, PR11H, PR12L, PR12H, PR13L) (1/3)

Address: FFFE8H After reset: FFH R/W

Symbol	<7>	<6>	<5>	<4>	<3>	<2>	<1>	<0>
PR00L	PPR05 CMPPR00	PPR04 SPMPR0	PPR03	PPR02	PPR01	PPR00	LVIPR0	WDTIPR0

Address: FFFECH After reset: FFH R/W

Symbol	<7>	<6>	<5>	<4>	<3>	<2>	<1>	<0>
PR10L	PPR15 CMPPR10	PPR14 SPMPR1	PPR13	PPR12	PPR11	PPR10	LVIPR1	WDTIPR1

Address: FFFE9H After reset: FFH R/W

Symbol	<7>	<6>	<5>	<4>	<3>	<2>	<1>	<0>
PR00H	LIN0TRMPR 0	RAMPR0	TRJPR00	TRDPR01	TRDPR00	SRPR00 CSIPR001 IICPR001	STPR00 CSIPR000 IICPR000	CLMPR0 PPR013

Address: FFFEDH After reset: FFH R/W

Symbol	<7>	<6>	<5>	<4>	<3>	<2>	<1>	<0>
PR10H	LIN0TRMPR 1	RAMPR1	TRJPR10	TRDPR11	TRDPR10	SRPR10 CSIPR101 IICPR101	STPR10 CSIPR100 IICPR100	CLMPR1 PPR113

Address: FFFEAH After reset: FFH R/W

Symbol	<7>	<6>	<5>	<4>	<3>	<2>	<1>	<0>
PR01L	TMPR003	TMPR002	TMPR001	TMPR000	PPR08 RTCPR0	IICAPR00	LIN0STAP R0 LIN0PR0	LIN0RVCPR 0

<R> **Figure 21-4. Format of Priority Specification Flag Registers (PR00L, PR00H, PR01L, PR01H, PR02L, PR02H, PR03L, PR10L, PR10H, PR11L, PR11H, PR12L, PR12H, PR13L) (2/3)**

Address: FFFEEH After reset: FFH R/W

Symbol	<7>	<6>	<5>	<4>	<3>	<2>	<1>	<0>
PR11L	TMPR103	TMPR102	TMPR101	TMPR100	PPR18 RTCPR1	IICAPR10	LIN0STAPR1 LIN0PR1	LIN0RVCPR1

Address: FFFEBH After reset: FFH R/W

Symbol	<7>	<6>	<5>	<4>	<3>	<2>	<1>	<0>
PR01H	TMPR004	SRPR01 CSIPR011 IICPR011	STPR01 CSIPR010 IICPR010	PPR010 TMPR003H	PPR09 TMPR001H	PPR07 TMPR013H	PPR06 TMPR011H	ADPR0

Address: FFFEFH After reset: FFH R/W

Symbol	<7>	<6>	<5>	<4>	<3>	<2>	<1>	<0>
PR11H	TMPR104	SRPR11 CSIPR111 IICPR111	STPR11 CSIPR110 IICPR110	PPR110 TMPR103H	PPR19 TMPR101H	PPR17 TMPR113H	PPR16 TMPR111H	ADPR1

Address: FFFD8H After reset: FFH R/W

Symbol	<7>	<6>	<5>	<4>	<3>	<2>	<1>	<0>
PR02L	CAN0CFRPR0	CAN0WUPPR0	CAN0ERRPR0	KRPR0	PPR011 LIN0WUPPR0	TMPR007	TMPR006	TMPR005

Address: FFFDCH After reset: FFH R/W

Symbol	<7>	<6>	<5>	<4>	<3>	<2>	<1>	<0>
PR12L	CAN0CFRPR1	CAN0WUPPR1	CAN0ERRPR1	KRPR1	PPR111 LIN0WUPPR1	TMPR107	TMPR106	TMPR105

Address: FFFD9H After reset: FFH R/W

Symbol	<7>	<6>	<5>	<4>	<3>	<2>	<1>	<0>
PR02H	FLPR0	TMPR013	TMPR012	TMPR011	TMPR010	CANGERRPR0	CANGRFRPR0	CAN0TRMPR0

Address: FFFDDH After reset: FFH R/W

Symbol	<7>	<6>	<5>	<4>	<3>	<2>	<1>	<0>
PR12H	FLPR1	TMPR113	TMPR112	TMPR111	TMPR110	CANGERRPR 1	CANGRFRPR1	CAN0TRMPR1

<R> **Figure 21-4. Format of Priority Specification Flag Registers (PR00L, PR00H, PR01L, PR01H, PR02L, PR02H, PR03L, PR10L, PR10H, PR11L, PR11H, PR12L, PR12H, PR13L) (3/3)**

Address: FFFDAH After reset: FFH R/W

Symbol	<7>	<6>	<5>	<4>	<3>	<2>	<1>	<0>
PR03L	TMPR017	TMPR016	TMPR015	TMPR014	LIN1STAPR0 LIN1PR0	LIN1RVCPR0	LIN1TRMPR0	PPR012 LIN1WUPPR0

Address: FFFDEH After reset: FFH R/W

Symbol	<7>	<6>	<5>	<4>	<3>	<2>	<1>	<0>
PR13L	TMPR117	TMPR116	TMPR115	TMPR114	LIN1STAPR1 LIN1PR1	LIN1RVCPR1	LIN1TRMPR1	PPR112 LIN1WUPPR1

XXPR1X	XXPR0X	Priority level selection
0	0	Specify level 0 (high priority level)
0	1	Specify level 1
1	0	Specify level 2
1	1	Specify level 3 (low priority level)

Caution The above is the bit layout for the 100-pin. The available bits differ depending on the product. For details about the bits available for each product, see Table 21-2. Be sure to set bits that are not available to 1.

21.3.4 External interrupt rising edge enable registers (EGP0, EGP1), external interrupt falling edge enable registers (EGN0, EGN1)

These registers specify the valid edge for INTP0 to INTP13.

The EGP0, EGP1, EGN0, and EGN1 registers can be set by a 1-bit or 8-bit memory manipulation instruction.

Reset signal generation clears these registers to 00H.

Figure 21-5. Format of External Interrupt Rising Edge Enable Registers (EGP0, EGP1) and External Interrupt Falling Edge Enable Registers (EGN0, EGN1)

Address: FFF38H After reset: 00H R/W

Symbol	7	6	5	4	3	2	1	0
EGP0	EGP7	EGP6	EGP5	EGP4	EGP3	EGP2	EGP1	EGP0

Address: FFF39H After reset: 00H R/W

Symbol	7	6	5	4	3	2	1	0
EGN0	EGN7	EGN6	EGN5	EGN4	EGN3	EGN2	EGN1	EGN0

Address: FFF3AH After reset: 00H R/W

Symbol	7	6	5	4	3	2	1	0
EGP1	0	0	EGP13	EGP12	EGP11	EGP10	EGP9	EGP8

Address: FFF3BH After reset: 00H R/W

Symbol	7	6	5	4	3	2	1	0
EGN1	0	0	EGN13	EGN12	EGN11	EGN10	EGN9	EGN8

EGPn	EGNn	INTPn pin valid edge selection (n = 0 to 13)
0	0	Edge detection disabled
0	1	Falling edge
1	0	Rising edge
1	1	Both rising and falling edges

Table 21-3 shows the ports corresponding to the EGPn and EGNn bits.

Table 21-3. Ports Corresponding to EGPn and EGNn bits

Detection Enable Bit		Edge Detection Port	Interrupt Request Signal	80, 100-pin	64-pin	48-pin	30, 32-pin	20-pin
EGP0	EGN0	P137	INTP0	√	√	√	√	√
EGP1	EGN1	P125	INTP1	√	√	√	√	√
EGP2	EGN2	P30(P31)	INTP2	√	√	√	√	√
EGP3	EGN3	P17 (P50)	INTP3	√	√	√	√	√
EGP4	EGN4	P120	INTP4	√	√	√	√	√
EGP5	EGN5	P12	INTP5	√	√	√	√	–
EGP6	EGN6	P71	INTP6	√	√	√	–	–
EGP7	EGN7	P32	INTP7	√	√	√	–	–
EGP8	EGN8	P70	INTP8	√	√ Note 1	√ Note 1	–	–
EGP9	EGN9	P00	INTP9	√	√ Note 1	√ Note 1	–	–
EGP10	EGN10	P53	INTP10	√	√ Note 1	–	–	–
EGP11	EGN11	P51	INTP11/ INTLIN0WUP Note 2	√	√	√	√	√
EGP12	EGN12	P77	INTP12/ INTLIN1WUP Note 2	√ Note 3	√ Note 3	–	–	–
EGP13	EGN13	P47	INTP13	√ Note 3	–	–	–	–

Notes 1. Not provided in Group A products.

2. Set the EGP1 and EGN1 registers before the INTLIN0WUP and INTLIN1WUP interrupts are generated.

3. Provided only in Group E products.

Caution When the input port pins used for the external interrupt functions are switched to the output mode, the INTPn interrupt might be generated upon detection of a valid edge. When switching the input port pins to the output mode, set the port mode register (PMxx) to 0 after disabling the edge detection (by setting EGPn and EGNn to 0).

Remarks 1. For edge detection ports, see **2.1 Pin Function List**.

2. n = 0 to 13

21.3.5 Interrupt source determination flag register 0 (INTFLG0)

This register determines which of interrupt sources causes an interrupt, an external interrupt source (INTP4, 5, 8, 13) or other interrupt source that are allocated to the same vector table address as the comparator detection 0 interrupt source.

The flag in this register cannot be set by software.

The flags are cleared by software.

To clear the flag, write 1 to the bits other than the bit desired to be cleared.

Use an 8-bit data transfer instruction as a write instruction.

Figure 21-6. Format of Interrupt Source Determination Flag Register 0 (INTFLG0)

Address: F0079H After reset: 00H R/W

Symbol	7	6	5	4	3	2	1	0
INTFLG0	INTFLG07 Note 4, 6	INTFLG06 Notes 3, 5	0	0	0	INTFLG02 Notes 1, 2, 6	INTFLG01 Note 1, 6	INTFLG00 Note 6

INTFLG07 Note 4, 6	Interrupt source determination flag at vector table address 00014h
0	An INTP13 interrupt has not been generated.
1	An INTP13 interrupt has been generated.

INTFLG06 Notes 3, 5	Interrupt source determination flag at vector table address 00012h
0	A comparator detection 0 interrupt has not been generated.
1	A comparator detection 0 interrupt has been generated.

INTFLG02 Notes 1, 2, 6	Interrupt source determination flag at vector table address 0002Ah
0	An INTP8 interrupt has not been generated.
1	An INTP8 interrupt has been generated.

INTFLG01 Note 1, 6	Interrupt source determination flag at vector table address 00012h
0	An INTP5 interrupt has not been generated.
1	An INTP5 interrupt has been generated.

INTFLG00 Note 6	Interrupt source determination flag at vector table address 00010h
0	An INTP4 interrupt has not been generated.
1	An INTP4 interrupt has been generated.

Notes
1. Not provided in Group A products.
2. Not provided in the RL78/F13 (CAN and LIN incorporated) products with 30 or 32 pins and the RL78/F14 products with 30 or 32 pins.
3. Only provided in products of Groups D and E.
4. Only provided in 80-pin products of the RL78/F14 with 128 Kbytes to 256 Kbytes of code flash memory and 100-pin products of the RL78/F14 with 64 Kbytes to 256 Kbytes of code flash memory.

5. Even if the RPTINT bit in the DTCCRj register (j = 0 to 23) is set to 0 (disabling the interrupt while the DTC module is in repeat mode), when the comparator detection 0 interrupt source is generated, the INTFLG06 bit is set to 1. For details, see (A) Internal maskable interrupt (only comparator detection 0 interrupt) in **Figure 21-1. Basic Configuration of Interrupt Function**.
6. If an INTPn interrupt is generated, the bit m in the interrupt source determination flag register 0 (INTFLG0) is set regardless of the settings of the bits in the interrupt mask flag register (MKxx) and interrupt mask register (INTMSK).
   m: Bit number (m = 0, 1, 2, 7), n: INTP interrupt number (n = 4, 5, 8, 13)

The interrupt sources INTP4, INTP5, INTP8, and INTP13 are function-multiplexed with other interrupts. INTFLG0 register is used to determine which of the interrupt sources causes an interrupt. Figure 21-7 shows the flowchart of interrupt processing using the interrupt source determination flag.

Figure 21-7. Flowchart of Interrupt Processing Using the Interrupt Source Determination Flag

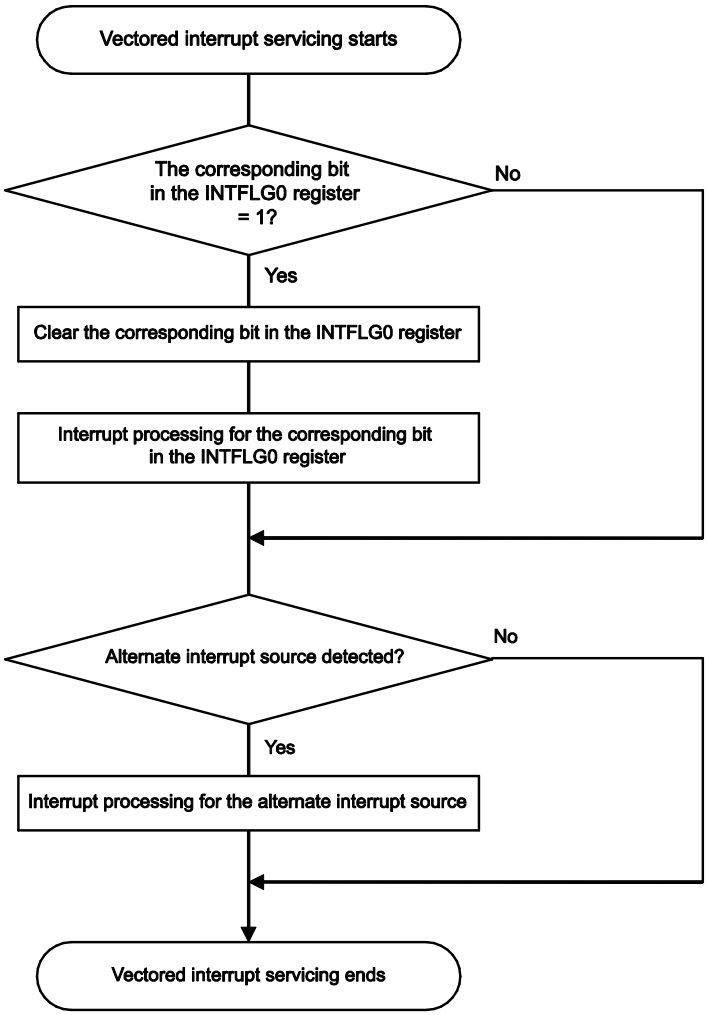

21.3.6 Interrupt mask register (INTMSK)

The interrupt mask register in the interrupt control circuit is used to mask interrupt requests corresponding to an INTPn interrupt that is to be used as an event signal for the ELC or a source for DTC activation.

Set this register when the INTP4 to INTP6 signals are used not as interrupt sources for the interrupt control circuit but as only ELC event signals or DTC activation sources.

This register can be set by an 8-bit memory manipulation instruction

Reset signal generation sets this register to FFH.

Figure 21-8. Format of Interrupt Mask Register (INTMSK)

Address: F007CH After reset: FFH R/W

Symbol	7	6	5	4	3	2	1	0
INTMSK	1	1	1	1	1	INTMSK2 Notes 1, 2	INTMSK1 Note 1	INTMSK0

INTMSK2 Notes 1, 2	Setting masking for INTP6 interrupt source to the interrupt control circuit
0	Requests to the interrupt control circuit and DTC are enabled.
1	Requests to the interrupt control circuit are disabled, and requests to DTC are enabled.

INTMSK1 Note 1	Setting masking for INTP5 interrupt source to the interrupt control circuit Note 3
0	Requests to the interrupt control circuit, ELC, and DTC are enabled.
1	Requests to the interrupt control circuit are disabled, and requests to ELC and DTC are enabled.

INTMSK0	Setting masking for INTP4 interrupt source to the interrupt control circuit Note 3
0	Requests to the interrupt control circuit, ELC, and DTC are enabled.
1	Requests to the interrupt control circuit are disabled, and requests to ELC and DTC are enabled.

Notes 1. Not provided in the 20-pin products.

2. Not provided in the products with 30 or 32 pins.

3. If an INTPn interrupt is generated, the bit m in the interrupt source determination flag register 0 (INTFLG0) is set regardless of the setting of the bit in the interrupt mask register.
n: INTP interrupt number (n = 4, 5), m: Bit number (m = 0,1)

21.3.7 Input switch control register (ISC)

The ISC0 bit of the ISC register is used for the LIN-bus communication with UART0. The ISC2 and ISC3 bits are used for the LIN/UART module (RLIN3). When the ISC0 bit is set to 1, set the TIS17 and TIS16 bits in the TIS1 register (timer input select register 1) at the same time.

Setting bit 0 to 1 selects the input signal of the serial data input pin (RxD0) as the external interrupt input (INTP0), which allows detection of the wakeup signal by the INTP0 interrupt.

Setting bits 2 and 3 to 1 select the input signal of the serial data input pin (RxD0) for the LIN/UART module as the external interrupt input.

<R> This register can be set by a 1-bit or 8-bit memory manipulation instruction.

Reset signal generation sets this register to 00H.

Figure 21-9. Format of Input Switch Control Register (ISC)

Address: F0073H After reset: 00H R/W

Symbol	7	6	5	4	<3>	<2>	1	<0>
ISC	0	0	0	0	ISC3	ISC2	0	ISC0

ISC3	Input selection for external interrupt INTP12
0	INTP12 pin input signal is selected as external interrupt input.
1	LRxD1 pin input signal is selected as external interrupt input.

ISC2	Input selection for external interrupt INTP11
0	INTP11 pin input signal is selected as external interrupt input.
1	LRxD0 pin input signal is selected as external interrupt input.

ISC0	Input selection for external interrupt INTP0
0	INTP0 pin input signal is selected as external interrupt input. (normal operation)
1	RxD0 pin input signal is selected as external interrupt input. (wake-up signal detection)

Caution Bits 7 to 4 and 1 should always be set to 0.

21.3.8 Program status word (PSW)

The program status word is a register used to hold the instruction execution result and the current status for an interrupt request. The IE flag that sets maskable interrupt enable/disable and the ISP0 and ISP1 flags that control multiple interrupt servicing are mapped to the PSW.

Besides 8-bit read/write, this register can carry out operations using bit manipulation instructions and dedicated instructions (EI and DI). When a vectored interrupt request is acknowledged, if the BRK instruction is executed, the contents of the PSW are automatically saved into a stack and the IE flag is reset to 0. When a maskable interrupt request is acknowledged, if the value of the bits in the priority specification flag register which correspond to that interrupt is not 00, the value minus 1 is transferred to the ISP0 and ISP1 flags. The PSW contents are also saved into the stack with the PUSH PSW instruction. They are restored from the stack with the RETI, RETB, and POP PSW instructions.

Reset signal generation sets PSW to 06H.

Figure 21-10. Configuration of Program Status Word

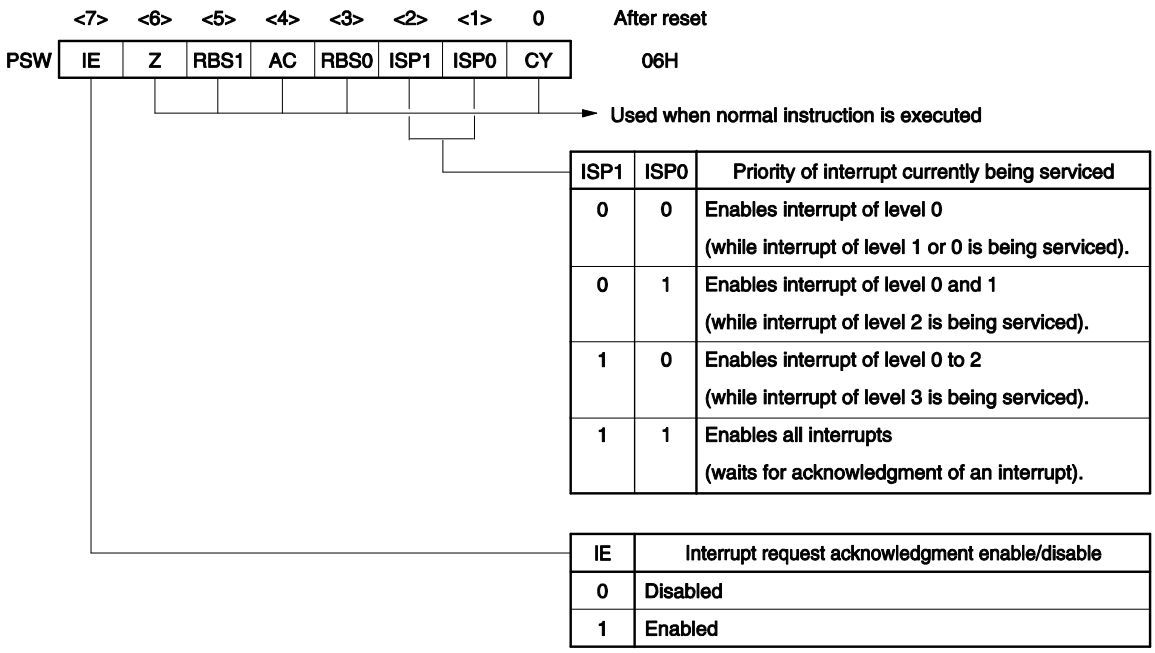

ISP1	ISP0	Priority of interrupt currently being serviced
0	0	Enables interrupt of level 0 (while interrupt of level 1 or 0 is being serviced).
0	1	Enables interrupt of level 0 and 1 (while interrupt of level 2 is being serviced).
1	0	Enables interrupt of level 0 to 2 (while interrupt of level 3 is being serviced).
1	1	Enables all interrupts (waits for acknowledgment of an interrupt).

IE	Interrupt request acknowledgment enable/disable
0	Disabled
1	Enabled

21.4 Interrupt Servicing Operations

21.4.1 Maskable interrupt request acknowledgment

A maskable interrupt request becomes acknowledgeable when the interrupt request flag is set to 1 and the mask (MK) flag corresponding to that interrupt request is cleared to 0. A vectored interrupt request is acknowledged if interrupts are in the interrupt enabled state (when the IE flag is set to 1). However, a low-priority interrupt request is not acknowledged during servicing of a higher priority interrupt request.

The times from generation of a maskable interrupt request until vectored interrupt servicing is performed are listed in Table 21-4 below.

For the interrupt request acknowledgment timing, see **Figures 21-12** and **21-13**.

Table 21-4. Time from Generation of Maskable Interrupt Until Servicing

	Minimum Time	Maximum Time[Note]
Servicing time	9 clocks	16 clocks

Note Maximum time does not apply when an instruction from the internal RAM area is executed.

Remark 1 clock: $1/f_{CLK}$ (f_{CLK}: CPU clock)

If two or more maskable interrupt requests are generated simultaneously, the request with a higher priority level specified in the priority specification flag is acknowledged first. If two or more interrupts requests have the same priority level, the request with the highest default priority is acknowledged first.

An interrupt request that is held pending is acknowledged when it becomes acknowledgeable.

Figure 21-11 shows the interrupt request acknowledgment algorithm.

If a maskable interrupt request is acknowledged, the contents are saved into the stacks in the order of program status word (PSW), then program counter (PC), the IE flag is reset (0), and the contents of the priority specification flag corresponding to the acknowledged interrupt are transferred to the ISP1 and ISP0 flags. The vector table data determined for each interrupt request is loaded into the PC and branched.

Restoring from an interrupt is possible by using the RETI instruction.

Figure 21-11. Interrupt Request Acknowledgment Processing Algorithm

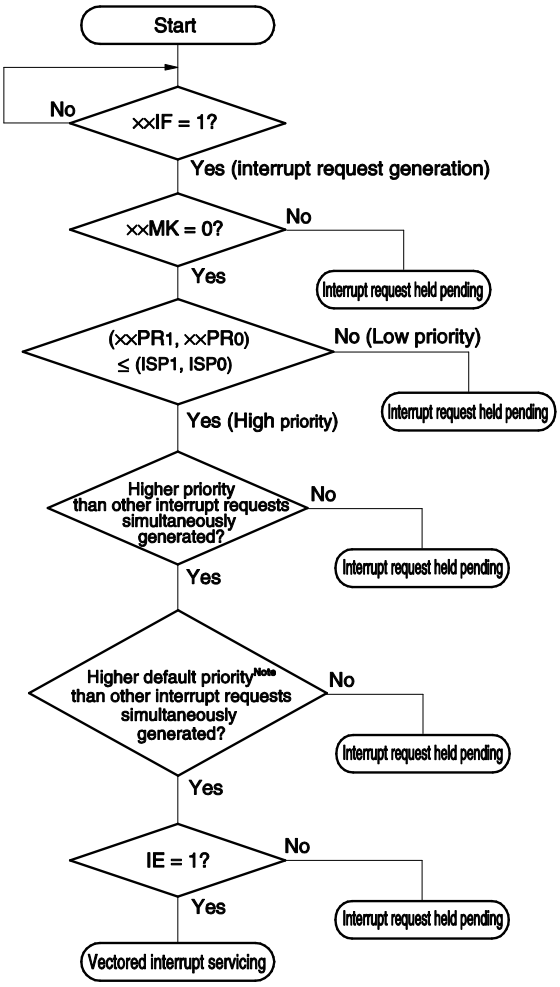

××IF:	Interrupt request flag
××MK:	Interrupt mask flag
××PR0:	Priority specification flag 0
××PR1:	Priority specification flag 1
IE:	Flag that controls acknowledgment of maskable interrupt request (1 = Enable, 0 = Disable)
ISP0, ISP1:	Flag that indicates the priority level of the interrupt currently being serviced

Note For the default priority, see **Table 21-1 Interrupt Source List**.

Figure 21-12. Interrupt Request Acknowledgment Timing (Minimum Time)

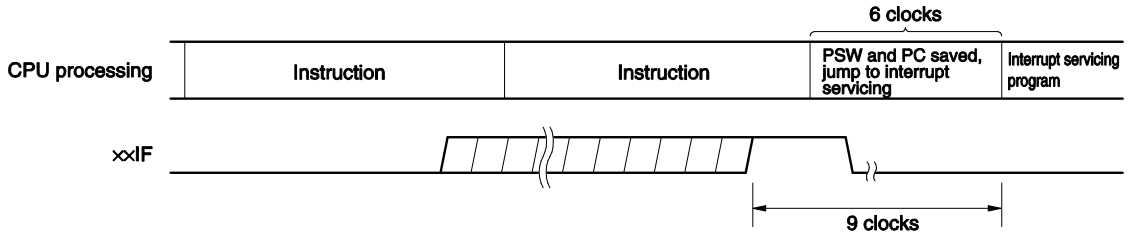

Remark 1 clock: 1/f_{CLK} (f_{CLK}: CPU clock)

Figure 21-13. Interrupt Request Acknowledgment Timing (Maximum Time)

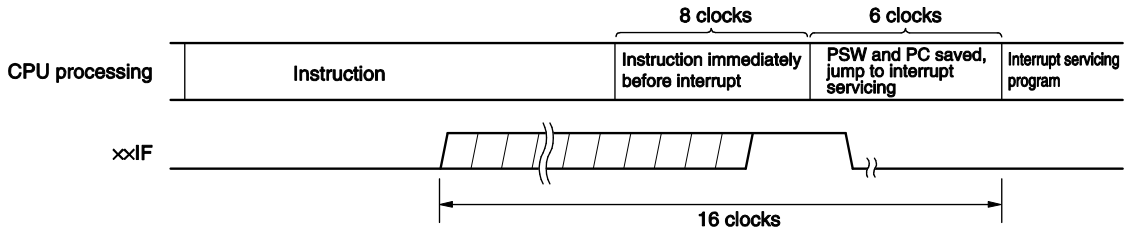

Remark 1 clock: 1/f_{CLK} (f_{CLK}: CPU clock)

21.4.2 Software interrupt request acknowledgment

A software interrupt request is acknowledged by BRK instruction execution. Software interrupts cannot be disabled.

If a software interrupt request is acknowledged, the contents are saved into the stacks in the order of the program status word (PSW), then program counter (PC), the IE flag is reset (0), and the contents of the vector table (0007EH, 0007FH) are loaded into the PC and branched.

Restoring from a software interrupt is possible by using the RETB instruction.

Caution Can not use the RETI instruction for restoring from the software interrupt.

21.4.3 Multiple interrupt servicing

Multiple interrupt servicing occurs when another interrupt request is acknowledged during execution of an interrupt.

Multiple interrupt servicing does not occur unless the interrupt request acknowledgment enabled state is selected (IE = 1). When an interrupt request is acknowledged, interrupt request acknowledgment becomes disabled (IE = 0). Therefore, to enable multiple interrupt servicing, it is necessary to set (1) the IE flag with the EI instruction during interrupt servicing to enable interrupt acknowledgment.

Moreover, even if interrupts are enabled, multiple interrupt servicing may not be enabled, this being subject to interrupt priority control. Two types of priority control are available: default priority control and programmable priority control. Programmable priority control is used for multiple interrupt servicing.

In the interrupt enabled state, if an interrupt request with a priority higher than that of the interrupt currently being serviced is generated, it is acknowledged for multiple interrupt servicing. If an interrupt with a priority equal to or lower than that of the interrupt currently being serviced is generated during interrupt servicing, it is not acknowledged for multiple interrupt servicing. However, when setting the IE flag to 1 during the interruption at level 0, other level 0 interruptions can be allowed.

Interrupt requests that are not enabled because interrupts are in the interrupt disabled state or because they have a lower priority are held pending. When servicing of the current interrupt ends, the pending interrupt request is acknowledged following execution of at least one main processing instruction execution.

Table 21-5 shows relationship between interrupt requests enabled for multiple interrupt servicing and Figure 21-14 shows multiple interrupt servicing examples.

Table 21-5. Relationship Between Interrupt Requests Enabled for Multiple Interrupt Servicing During Interrupt Servicing

Multiple Interrupt Request / Interrupt Being Serviced		Maskable Interrupt Request								Software Interrupt Request
		Priority Level 0 (PR = 00)		Priority Level 1 (PR = 01)		Priority Level 2 (PR = 10)		Priority Level 3 (PR = 11)		
		IE = 1	IE = 0	IE = 1	IE = 0	IE = 1	IE = 0	IE = 1	IE = 0	
Maskable interrupt	ISP1 = 0 ISP0 = 0	○	×	×	×	×	×	×	×	○
	ISP1 = 0 ISP0 = 1	○	×	○	×	×	×	×	×	○
	ISP1 = 1 ISP0 = 0	○	×	○	×	○	×	×	×	○
	ISP1 = 1 ISP0 = 1	○	×	○	×	○	×	○	×	○
Software interrupt		○	×	○	×	○	×	○	×	○

Remarks 1. ○: Multiple interrupt servicing enabled

2. ×: Multiple interrupt servicing disabled

3. ISP0, ISP1, and IE are flags contained in the PSW.

ISP1 = 0, ISP0 = 0: Enables interrupt of level 0 (an interrupt of level 1 or level 0 is being serviced).

ISP1 = 0, ISP0 = 1: Enables interrupt of level 0 and 1 (an interrupt of level 2 is being serviced).

ISP1 = 1, ISP0 = 0: Enables interrupt of level 0 to 2 (an interrupt of level 3 is being serviced).

ISP1 = 1, ISP0 = 1: Enables all interrupts (wait for an interrupt acknowledgment).

IE = 0: Interrupt request acknowledgment is disabled.

IE = 1: Interrupt request acknowledgment is enabled.

4. PR is a flag contained in the PR00L, PR00H, PR01L, PR01H, PR02L, PR02H, PR03L, PR10L, PR10H, PR11L, PR11H, PR12L, PR12H, and PR13L registers.

PR = 00: Specify level 0 with ××PR1× = 0, ××PR0× = 0 (higher priority level)

PR = 01: Specify level 1 with ××PR1× = 0, ××PR0× = 1

PR = 10: Specify level 2 with ××PR1× = 1, ××PR0× = 0

PR = 11: Specify level 3 with ××PR1× = 1, ××PR0× = 1 (lower priority level)

Figure 21-14. Examples of Multiple Interrupt Servicing (1/2)

Example 1. Multiple interrupt servicing occurs twice

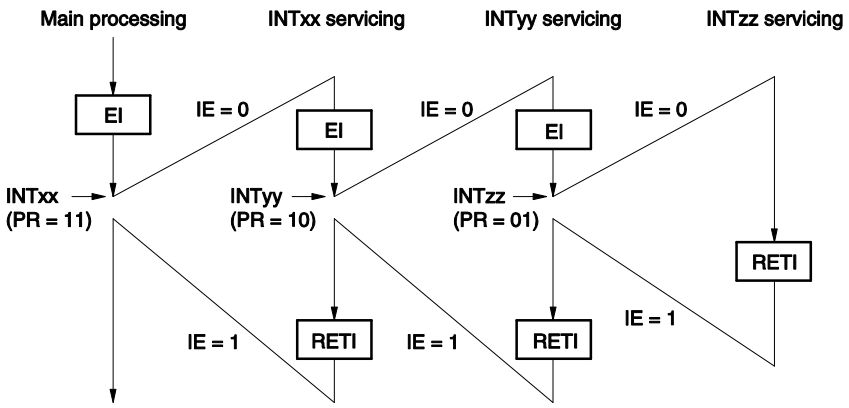

During servicing of interrupt INTxx, two interrupt requests, INTyy and INTzz, are acknowledged, and multiple interrupt servicing takes place. Before each interrupt request is acknowledged, the EI instruction must always be issued to enable interrupt request acknowledgment.

Example 2. Multiple interrupt servicing does not occur due to priority control

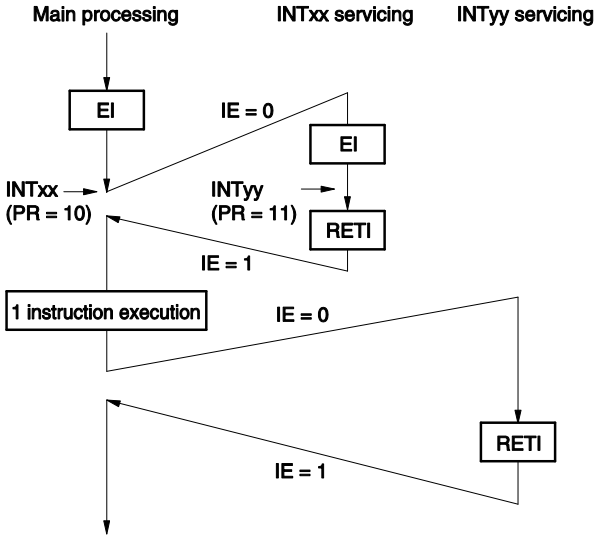

Interrupt request INTyy issued during servicing of interrupt INTxx is not acknowledged because its priority is lower than that of INTxx, and multiple interrupt servicing does not take place. The INTyy interrupt request is held pending, and is acknowledged following execution of one main processing instruction.

PR = 00: Specify level 0 with ××PR1× = 0, ××PR0× = 0 (higher priority level)
PR = 01: Specify level 1 with ××PR1× = 0, ××PR0× = 1
PR = 10: Specify level 2 with ××PR1× = 1, ××PR0× = 0
PR = 11: Specify level 3 with ××PR1× = 1, ××PR0× = 1 (lower priority level)
IE = 0: Interrupt request acknowledgment is disabled
IE = 1: Interrupt request acknowledgment is enabled.

Figure 21-14. Examples of Multiple Interrupt Servicing (2/2)

Example 3. Multiple interrupt servicing does not occur because interrupts are not enabled

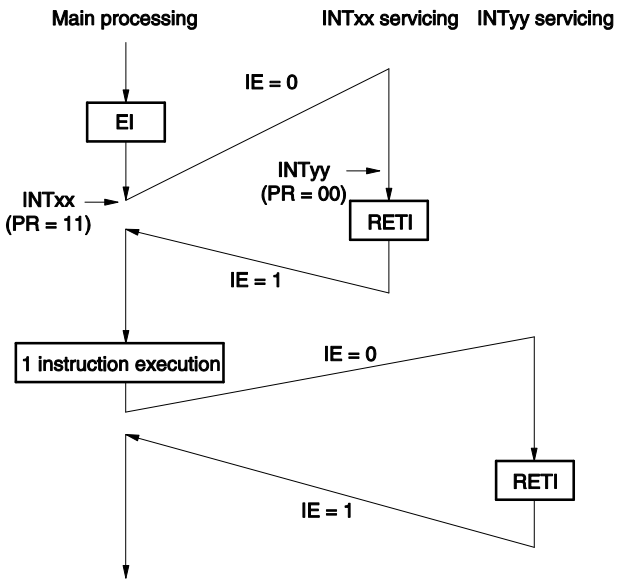

Interrupts are not enabled during servicing of interrupt INTxx (EI instruction is not issued), therefore, interrupt request INTyy is not acknowledged and multiple interrupt servicing does not take place. The INTyy interrupt request is held pending, and is acknowledged following execution of one main processing instruction.

PR = 00: Specify level 0 with ××PR1× = 0, ××PR0× = 0 (higher priority level)
PR = 01: Specify level 1 with ××PR1× = 0, ××PR0× = 1
PR = 10: Specify level 2 with ××PR1× = 1, ××PR0× = 0
PR = 11: Specify level 3 with ××PR1× = 1, ××PR0× = 1 (lower priority level)
IE = 0: Interrupt request acknowledgment is disabled
IE = 1: Interrupt request acknowledgment is enabled.

21.4.4 Interrupt servicing during division instruction

The RL78/F13 and RL78/F14 handle interrupts during the DIVHU/DIVWU instruction in order to enhance the interrupt response when a division instruction is executed.

- When an interrupt is generated while the DIVHU/DIVWU instruction is executed, the instruction is suspended
- After the instruction is suspended, the PC indicates the next instruction after DIVHU/DIVWU
- An interrupt is generated by the next instruction
- PC-3 is saved in the stack memory to execute the DIVHU/DIVWU instruction again

Table 21-6. Normal Interrupt Processing and Interrupt Processing while Executing Division Instructions

Normal interrupt	Interrupts while Executing DIVHU/DIVWU Instruction
(SP-1) ← PSW	(SP-1) ← PSW
(SP-2) ← $(PC)_S$	(SP-2) ← $(PC-3)_S$
(SP-3) ← $(PC)_H$	(SP-3) ← $(PC-3)_H$
(SP-4) ← $(PC)_L$	(SP-4) ← $(PC-3)_L$
PC_S ← 0000	PC_S ← 0000
PC_H ← (Vector)	PC_H ← (Vector)
PC_L ← (Vector)	PC_L ← (Vector)
SP ← SP-4	SP ← SP-4
IE ← 0	IE ← 0

Caution Disable interrupts when executing the DIVHU or DIVWU instruction in an interrupt servicing routine. Alternatively, unless they are executed in the RAM area, note that execution of a DIVHU or DIVWU instruction is possible even with interrupts enabled as long as a NOP instruction is added immediately after the DIVHU or DIVWU instruction in the assembly language source code. The following compilers automatically add a NOP instruction immediately after any DIVHU or DIVWU instruction output during the build process.

- **V. 1.71 and later versions of the CA78K0R (Renesas Electronics compiler), for both C and assembly language source code**
- **Service pack 1.40.6 and later versions of the EWRL78 (IAR compiler), for C language source code**
- **GNURL78 (KPIT compiler), for C language source code**

The AX, BC, DE, and HL registers are used for DIVHU/DIVWU. For the interrupt processing, save these registers in the stack memory.

Figure 21-15. Example of Interrupt during Division Instruction

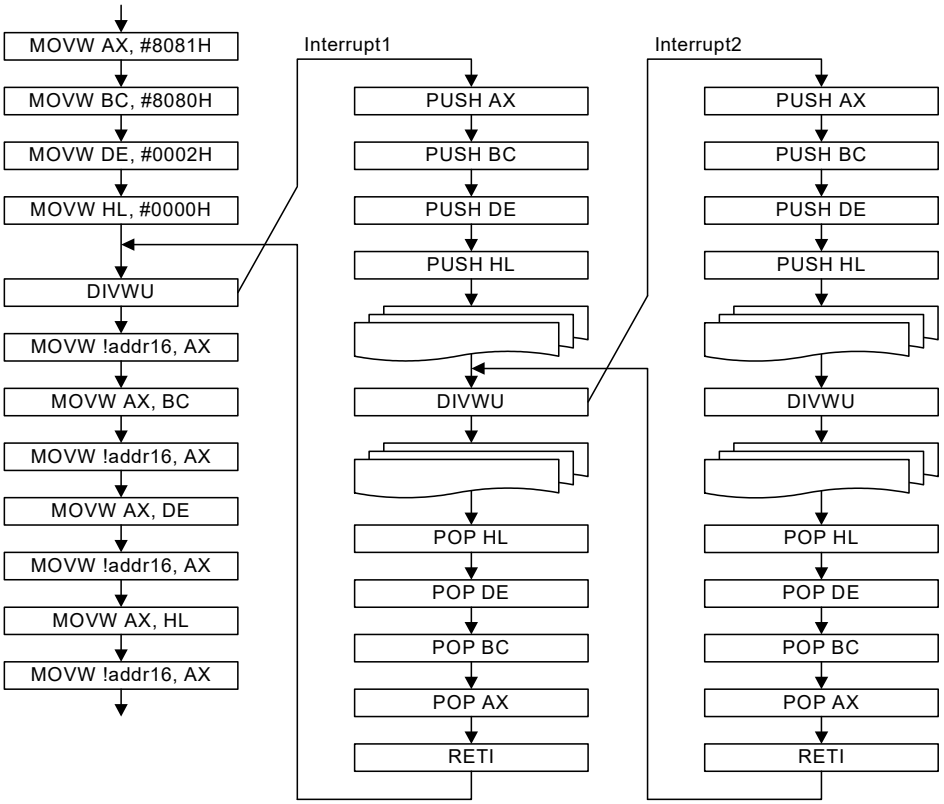

21.4.5 Interrupt request hold

There are instructions where, even if an interrupt request is issued while the instructions are being executed, interrupt request acknowledgment is held pending until the end of execution of the next instruction. These instructions (interrupt request hold instructions) are listed below.

- MOV PSW, #byte
- MOV PSW, A
- MOV1 PSW. bit, CY
- SET1 PSW. bit
- CLR1 PSW. bit
- RETB
- RETI
- POP PSW
- BTCLR PSW. bit, $addr20
- EI
- DI
- SKC
- SKNC
- SKZ
- SKNZ
- SKH
- SKNH
- MULHU
- MULH
- MACHU
- MACH
- Manipulation instructions for the IF0L, IF0H, IF1L, IF1H, IF2L, IF2H, IF3L, MK0L, MK0H, MK1L, MK1H, MK2L, MK2H, MK3L, PR00L, PR00H, PR01L, PR01H, PR02L, PR02H, PR03L, PR10L, PR10H, PR11L, PR11H, PR12L, PR12H, and PR13L registers

Caution The BRK instruction is not one of the above-listed interrupt request hold instructions. However, the software interrupt activated by executing the BRK instruction causes the IE flag to be cleared. Therefore, even if a maskable interrupt request is generated during execution of the BRK instruction, the interrupt request is not acknowledged.

Figure 21-16 shows the timing at which interrupt requests are held pending.

Figure 21-16. Interrupt Request Hold

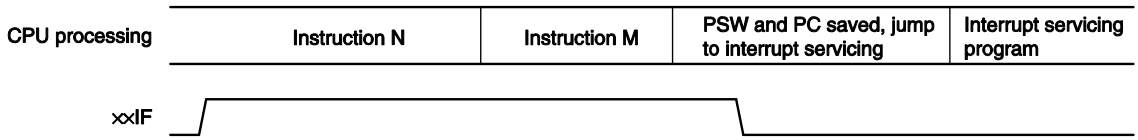

Remarks 1. Instruction N: Interrupt request hold instruction

2. Instruction M: Instruction other than interrupt request hold instruction

CHAPTER 22 KEY INTERRUPT FUNCTION

The number of key interrupt input channels differs, depending on the product.

	20-pin	32-pin	30, 48, 64, 80, 100-pin
Key interrupt input channels	2 ch	6 ch	8 ch

22.1 Functions of Key Interrupt

A key interrupt (INTKR) can be generated by setting the key return mode register (KRM) and inputting a falling edge to the key interrupt input pins (KR0 to KR7).

Table 22-1. Assignment of Key Interrupt Detection Pins

Flag	Description
KRM0	Controls KR0 signal in 1-bit units.
KRM1	Controls KR1 signal in 1-bit units.
KRM2	Controls KR2 signal in 1-bit units.
KRM3	Controls KR3 signal in 1-bit units.
KRM4	Controls KR4 signal in 1-bit units.
KRM5	Controls KR5 signal in 1-bit units.
KRM6	Controls KR6 signal in 1-bit units.
KRM7	Controls KR7 signal in 1-bit units.

<R> **Caution The pin assignment differs depending on the products. The PIOR50 bit can specify which I/O port is assigned to each KRn function. Inputs to the A/D converter are multiplexed with P70 to P74 and P80 to P87 and P90 to P96, to which the function can be assigned. These pins are used as analog input pins in their initial state. Use the PIOR50 bit and the ADPC register and the PMCx resister to make the pins operate as digital input pins before using the key interrupt function. For details of the PIOR50 bit and the ADPC register and the PMCx resister, refer to 4.3.14 Peripheral I/O redirection register 5 (PIOR5) and 12.3.11 A/D port configuration register (ADPC) and 4.3.6 Port mode control registers 7, 9, 12 (PMC7, PMC9, PMC12).**

<R> **Remarks 1.** n = 0 to 7 x = 7, 9

2. The available number of interrupts depends on the setting of the PIOR50 bit as shown below.

- When PIOR50 is set to 0
  KR0 to KR3: 48-pin products
  KR0 to KR7: 64-pin, 80-pin, 100-pin products
- When PIOR50 is set to 1
  KR0, KR1: 20-pin products
  KR0 to KR7: 30-pin, 48-pin, 64-pin products
  KR0 to KR5: 32-pin products

22.2 Configuration of Key Interrupt

Table 22-2 shows the configuration of the key interrupt. Figure 22-1 is the block diagram of the key interrupt.

Table 22-2. Configuration of Key Interrupt

Item	Configuration
Control register	Key return mode register (KRM)

Figure 22-1. Block Diagram of Key Interrupt

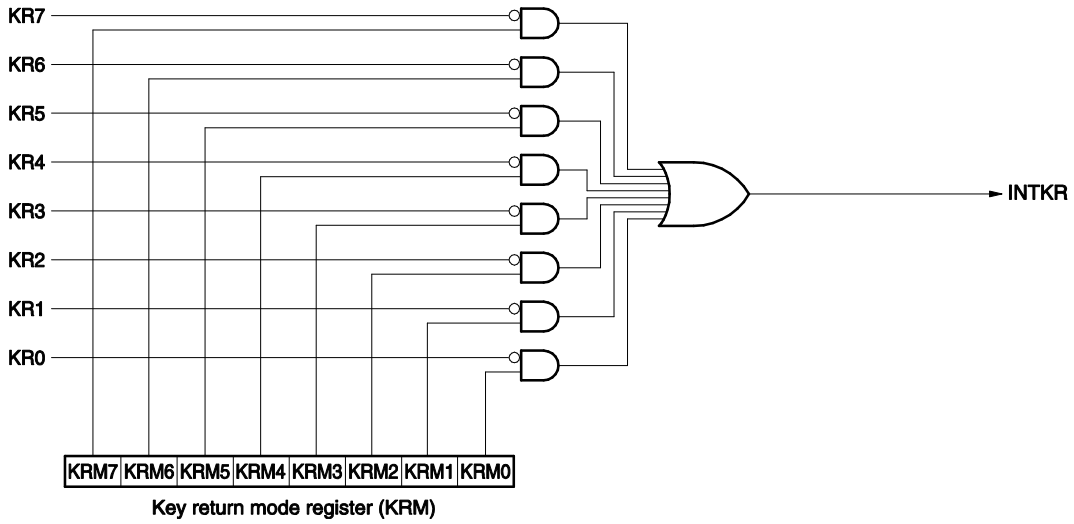

22.3 Register Controlling Key Interrupt

22.3.1 Key return mode register (KRM)

The KRM0 to KRM7 bits control signals KR0 to KR7.

The KRM register can be set by a 1-bit or 8-bit memory manipulation instruction.

Reset signal generation clears this register to 00H.

Figure 22-2. Format of Key Return Mode Register (KRM)

Address: FFF37H After reset: 00H R/W

Symbol	7	6	5	4	3	2	1	0
KRM	KRM7	KRM6	KRM5	KRM4	KRM3	KRM2	KRM1	KRM0

KRMn	Key interrupt mode control
0	Does not detect key interrupt signal
1	Detects key interrupt signal

Cautions 1. An interrupt will be generated if the target bit of the KRM register is set to 1 while the KRn pin is at low level. To ignore this interrupt, set the KRM register after disabling interrupt servicing by using the interrupt mask flag. Afterward, clear the interrupt request flag after waiting for the key interrupt input low-level width (t_{KR}).

2. The pins not used in the key interrupt can be used as normal ports.

3. When the assignment of the key interrupt input pin is changed by using the PIOR50 bit, an interrupt may be generated. The pin assignment must be changed while the KRM register is 00H or while the key input interrupt is prohibited.

4. Set the bits of the KRM register to 0 for pins to which the key interrupt function is not to be allocated.

Remark n = 0 to 7

CHAPTER 23 STANDBY FUNCTION

23.1 Standby Function and Configuration

23.1.1 Standby function

The standby function reduces the operating current of the system, and the following three modes are available.

(1) HALT mode

HALT instruction execution sets the HALT mode. In the HALT mode, the CPU operation clock is stopped. If the high-speed system clock, high-speed on-chip oscillator, subsystem clock, or low-speed on-chip oscillator is operating before the HALT mode is set, oscillation of each clock continues. In this mode, the operating current is not decreased as much as in the STOP mode, but the HALT mode is effective for restarting operation immediately upon interrupt request generation and carrying out intermittent operations frequently.

(2) STOP mode

STOP instruction execution sets the STOP mode. In the STOP mode, the high-speed system clock and high-speed on-chip oscillator stop, stopping the whole system, thereby considerably reducing the CPU operating current.
Because this mode can be cleared by an interrupt request, it enables intermittent operations to be carried out. However, because a wait time is required to secure the oscillation stabilization time after the STOP mode is released when the X1 clock is selected, select the HALT mode if it is necessary to start processing immediately upon interrupt request generation.
The output from a port pin can be inverted in response to the generation of a source condition for release from the STOP mode.

(3) SNOOZE mode

In response to a request for A/D conversion by a timer trigger signal (INTRTC), ELE event input [Note 1], or signal generated by the A/D converter trigger select register 0 (ADTRGS0) [Note 2], a signal for data reception by the LIN/UART module (RLIN3) in the UART mode, or a DTC activation signal, this LSI is released from the STOP mode and A/D conversion, data reception, or DTC operation proceed without the CPU operating. This can only be specified when the high-speed on-chip oscillator is selected for the CPU/peripheral hardware clock (f_{CLK}).
There is a function for the output of a signal to indicate whether the LSI is in the SNOOZE mode or not on a specified pin when this LSI enters and is released from the SNOOZE mode.

In any mode, all the contents of registers, flags and data memory just before the standby mode is set are held. The I/O port output latches and output buffer statuses are also held.

Notes **1.** Only in the RL78/F14.
2. Only in the RL78/F13.

(**Cautions** are listed on the next page.)

Cautions 1. The STOP mode can be used only when the CPU is operating on the main system clock. The STOP mode cannot be set while the CPU operates with the PLL clock or the subsystem/low-speed on-chip oscillator select clock. The HALT mode can be used when the CPU is operating on either the main system clock or the subsystem/low-speed on-chip oscillator select clock.

2. When shifting to the STOP mode, be sure to stop the peripheral hardware operation operating with main system clock before executing STOP instruction (except for the setting unit of SNOOZE mode).

3. When using the A/D converter and the LIN/UART module in the SNOOZE mode, set up the A/D converter mode register 2 (ADM2) and the UART standby control register (LUSCn) before switching to the STOP mode. For details, see 17.2 Register Descriptions.

4. The following sequence is recommended for operating current reduction of the A/D converter when the standby function is used: First clear bit 7 (ADCS) and bit 0 (ADCE) of A/D converter mode register 0 (ADM0) to 0 to stop the A/D conversion operation, and then execute the STOP instruction.

5. It can be selected by the option byte whether the WDT-dedicated low-speed on-chip oscillator continues oscillating or stops in the HALT or STOP mode. For details, see CHAPTER 29 OPTION BYTE.

23.2 Registers controlling standby function

Oscillation stabilization time when this LSI is released from the STOP mode is controlled by the following two registers.

- Oscillation stabilization time counter status register (OSTC)
- Oscillation stabilization time select register (OSTS)

Output from the port when a source condition for release from the STOP mode is generated is inverted by the following register.

- STOP status output control register (STPSTC)

Remark For the registers that start, stop, or select the clock, see **CHAPTER 5 CLOCK GENERATOR**.

23.2.1 Oscillation stabilization time counter status register (OSTC)

This is the register that indicates the count status of the X1 clock oscillation stabilization time counter.

The X1 clock oscillation stabilization time can be checked in the following case.

- If the X1 clock starts oscillation while the high-speed on-chip oscillator clock or sub/low-speed on-chip oscillator select clock is being used as the CPU clock.
- If the STOP mode is entered and then released while the high-speed on-chip oscillator clock is being used as the CPU clock with the X1 clock oscillating.

The OSTC register can be read by a 1-bit or 8-bit memory manipulation instruction.

When reset is released (reset by $\overline{\text{RESET}}$ input, POR, LVD, WDT, and executing an illegal instruction), the STOP instruction and MSTOP bit (bit 7 of clock operation status control register (CSC)) = 1 clear this register to 00H.

Figure 23-1. Format of Oscillation Stabilization Time Counter Status Register (OSTC)

Address: FFFA2H After reset: 00H R

Symbol	7	6	5	4	3	2	1	0
OSTC	MOST8	MOST9	MOST10	MOST11	MOST13	MOST15	MOST17	MOST18

MOST 8	MOST 9	MOST 10	MOST 11	MOST 13	MOST 15	MOST 17	MOST 18	Oscillation stabilization time status		
									f_X = 10 MHz	f_X = 20 MHz
0	0	0	0	0	0	0	0	$2^8/f_X$ max.	25.6 μs max.	12.8 μs max.
1	0	0	0	0	0	0	0	$2^8/f_X$ min.	25.6 μs min.	12.8 μs min.
1	1	0	0	0	0	0	0	$2^9/f_X$ min.	51.2 μs min.	25.6 μs min.
1	1	1	0	0	0	0	0	$2^{10}/f_X$ min.	102.4 μs min.	51.2 μs min.
1	1	1	1	0	0	0	0	$2^{11}/f_X$ min.	204.8 μs min.	102.4 μs min.
1	1	1	1	1	0	0	0	$2^{13}/f_X$ min.	819.2 μs min.	409.6 μs min.
1	1	1	1	1	1	0	0	$2^{15}/f_X$ min.	3.27 ms min.	1.63 ms min.
1	1	1	1	1	1	1	0	$2^{17}/f_X$ min.	13.10 ms min.	6.55 ms min.
1	1	1	1	1	1	1	1	$2^{18}/f_X$ min.	26.21 ms min.	13.10 ms min.

Cautions 1. After the above time has elapsed, the bits are set to 1 in order from the MOST8 bit and remain 1.

2. The oscillation stabilization time counter counts up to the oscillation stabilization time set by the oscillation stabilization time select register (OSTS). In the following cases, set the oscillation stabilization time of the OSTS register to the value greater than the count value which is to be checked by the OSTC register.

- **If the X1 clock starts oscillation while the high-speed on-chip oscillator clock or subsystem clock is being used as the CPU clock.**
- **If the STOP mode is entered and then released while the high-speed on-chip oscillator clock is being used as the CPU clock with the X1 clock oscillating.**

(Note, therefore, that only the status up to the oscillation stabilization time set by the OSTS register is set to the OSTC register after the STOP mode is released.)

3. The X1 clock oscillation stabilization wait time does not include the time until clock oscillation starts ("a" below).

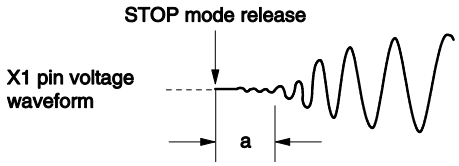

Remark fx: X1 clock oscillation frequency

23.2.2 Oscillation stabilization time select register (OSTS)

This register is used to select the X1 clock oscillation stabilization wait time when the STOP mode is released.

When the X1 clock is made to oscillate, the operation automatically waits for the time set using the OSTS register.

After the X1 clock starts oscillating, confirm with the oscillation stabilization time counter status register (OSTC) that the desired oscillation stabilization time has elapsed. The oscillation stabilization time can be checked up to the time set using the OSTC register.

The OSTS register can be set by an 8-bit memory manipulation instruction.

Writing to the OSTS register is disabled when the GCSC bit of the IAWCTL register is set to 1.

Reset signal generation sets this register to 07H.

Figure 23-2. Format of Oscillation Stabilization Time Select Register (OSTS)

Address: FFFA3H After reset: 07H R/W

Symbol	7	6	5	4	3	2	1	0
OSTS	0	0	0	0	0	OSTS2	OSTS1	OSTS0

OSTS2	OSTS1	OSTS0	Oscillation stabilization time selection		
				f_X = 10 MHz	f_X = 20 MHz
0	0	0	$2^8/f_X$	25.6 μs	12.8 μs
0	0	1	$2^9/f_X$	51.2 μs	25.6 μs
0	1	0	$2^{10}/f_X$	102.4 μs	51.2 μs
0	1	1	$2^{11}/f_X$	204.8 μs	102.4 μs
1	0	0	$2^{13}/f_X$	819.2 μs	409.6 μs
1	0	1	$2^{15}/f_X$	3.27 ms	1.63 ms
1	1	0	$2^{17}/f_X$	13.10 ms	6.55 ms
1	1	1	$2^{18}/f_X$	26.21 ms	13.10 ms

1. **To set the STOP mode when the X1 clock is used as the CPU clock, set the OSTS register before executing the STOP instruction.**
2. **Before changing the setting of the OSTS register, confirm that the count operation of the OSTC register is completed.**
3. **Do not change the value of the OSTS register during the X1 clock oscillation stabilization time.**
4. **The oscillation stabilization time counter counts up to the oscillation stabilization time set by the oscillation stabilization time select register (OSTS).**
   In the following cases, set the oscillation stabilization time of the OSTS register to the value greater than the count value which is to be checked by the OSTC register.
   - **If the X1 clock starts oscillation while the high-speed on-chip oscillator clock or subsystem clock is being used as the CPU clock.**
   - **If the STOP mode is entered and then released while the high-speed on-chip oscillator clock is being used as the CPU clock with the X1 clock oscillating.**

   (Note, therefore, that only the status up to the oscillation stabilization time set by the OSTS register is set to the OSTC register after the STOP mode is released.)
5. **The X1 clock oscillation stabilization wait time does not include the time until clock oscillation starts ("a" below).**

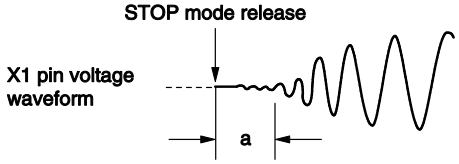

Remark fx: X1 clock oscillation frequency

23.2.3 STOP status output control register (STPSTC)

The port latch of P31 or P52 can be inverted in response to a source condition for release from the STOP mode being generated or a transition from SNOOZE mode to normal mode.

Set the STPSTC register by a 1-bit or 8-bit memory manipulation instruction.

Writing to the STPSTC register is disabled when the GCSC bit of the IAWCTL register is set to 1.

Reset signal generation clears this register to 00H.

Cautions 1. As the 20-, 30-, and 32-pin products do not have the STOPST function, they do not have the STPSTC register.

2. When the STOP status output control register is to be used, the target port pin should be placed in the output mode and the port latch should be set to 0 beforehand.

Figure 23-3. Format of STOP Status Output Control Register (STPSTC)

Address: F02CAH After reset: 00H R/W

Symbol	<7>	6	5	<4>	3	2	1	<0>
STPSTC	STPOEN	0	0	STPLV Note 1	0	0	0	STPSEL Note 2

STPOEN	Enabling or disabling of STOPST output
0	Nothing is done when this LSI is released from the STOP mode.
1	The STPLV value is output on the pin selected by STPSEL when this LSI is released from the STOP mode.

STPLV Note 1	Control of STOPST output level
0	Output low
1	Output high

STPSEL Note 2	Control of STOPST pin selection
0	Selects P31
1	Selects P52

Notes 1. The STPLV bit is inverted when this LSI is released from the STOP mode and when this LSI makes a transition from SNOOZE mode to normal mode.

2. Bit 0 is a read-only reserved bit in 48-pin products. When setting the register, write the initial value, 0, to this bit.

Caution Be sure to set bits 1 to 3, 5, and 6 of the STPSTC register to 0.

The following figure shows the timing of the STOPST pin and STPLV bit during CPU operation status.

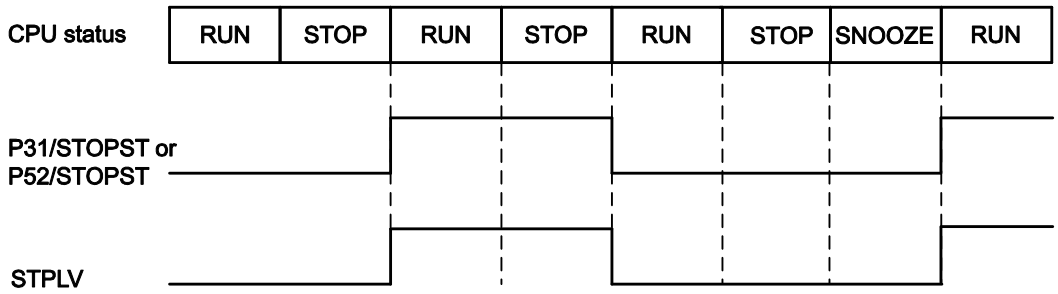

23.3 Standby Function Operation

23.3.1 HALT mode

(1) HALT mode

The HALT mode is set by executing the HALT instruction. HALT mode can be set regardless of whether the CPU clock before the setting was the high-speed system clock, high-speed on-chip oscillator clock, PLL clock, low-speed on-chip oscillator clock, or subsystem clock.

The operating statuses in the HALT mode are shown below.

Caution If the interrupt mask flag is 0 (interrupt servicing enabled) and the interrupt request flag is 1 (interrupt request signal is generated), the HALT mode is released even if the HALT instruction is executed (Because the interrupt request signal is used to release the HALT mode).

Table 23-1. Operating Statuses in HALT Mode (1/2)

Item \ HALT Mode Setting	When HALT Instruction Is Executed While CPU Is Operating on Main System Clock			
	When CPU Is Operating on High-speed On-chip Oscillator Clock (f_{IH})	When CPU Is Operating on X1 Clock (f_X)	When CPU Is Operating on External Main System Clock (f_{EX})	When CPU Is Operating on PLL Clock (f_{PLL})
System clock	Clock supply to the CPU is stopped			
Main system clock f_{IH}	Operation continues (cannot be stopped)	Operation disabled		Only operation of the PLL clock continues (and cannot be stopped). Clocks other than the PLL clock do not operate.
Main system clock f_X	Operation disabled	Operation continues (cannot be stopped)	Cannot operate	
Main system clock f_{EX}		Cannot operate	Operation continues (cannot be stopped)	
Main system clock f_{PLL}		Operation disabled	Operation disabled	Operation continues (cannot be stopped)
Subsystem clock f_{XT}, f_{EXS}	Status before HALT mode was set is retained			
f_{IL}	Set by bit 1 (HPIEN) of on-chip debug option byte (000C3H/020C3H), bit 0 (SELLOSC) of the CKSEL register, and bit 4 (WUTMMCK0) of the OSMC register. • WUTMMCK0 = 1: Oscillates • WUTMMCK0 = 0 and SELLOSC = 1: Oscillates • WUTMMCK0 = 0, SELLOSC = 0, and HPIEN = 1: Oscillates • WUTMMCK0 = 0, SELLOSC = 0, and HPIEN = 0: Stops			
f_{WDT}	Set by bits 0 (WDSTBYON) and 4 (WDTON) of user option byte (000C0H/020C0H) • WDTON = 0: Stops • WDTON = 1 and WDSTBYON = 1: Oscillates • WDTON = 1 and WDSTBYON = 0: Stops			
CPU	Operation stopped			
Code flash memory				
Data flash memory				
RAM	Operation stopped (operation can continue during DTC transfer)			
Port (latch)	Status before HALT mode was set is retained			
Timer array unit	Operable			
Real-time clock (RTC)				
Watchdog timer	See **CHAPTER 11 WATCHDOG TIMER**			
Clock monitor	Operable (f_{IL} operates)			
Timer RJ	Operable			
Timer RD				
Clock output/buzzer output				
A/D converter				
D/A converter				
Comparator				
Serial array unit (SAU)				
Serial interface (IICA)				
DTC				
ELC	Linking between operational function blocks is possible.			
LIN/UART module (RLIN3)	Operable			
CAN interface (RS-CAN lite)				
Power-on-reset function				
Voltage detection function				
External interrupt				

Item \ HALT Mode Setting		When HALT Instruction Is Executed While CPU Is Operating on Main System Clock			
		When CPU Is Operating on High-speed On-chip Oscillator Clock (f_{IH})	When CPU Is Operating on X1 Clock (f_X)	When CPU Is Operating on External Main System Clock (f_{EX})	When CPU Is Operating on PLL Clock (f_{PLL})
Key interrupt function		Operable			
CRC operation function	High-speed CRC				
	General-purpose CRC	Operation stopped (operation can continue during DTC transfer)			
Illegal-memory access detection function					
RAM2 bit error detection function					
RAM guard function					
SFR guard function					
CPU stack pointer monitor function		Operation stopped (operation can continue during vectored interrupt servicing)			

Remark Operation stopped: Operation is automatically stopped before switching to the HALT mode.
Operation disabled: Operation is stopped before switching to the HALT mode.
Cannot operate: Operation is not possible regardless of switching to the HALT mode.
f_{IH}: High-speed on-chip oscillator clock
f_{IL}: Low-speed on-chip oscillator clock
f_X: X1 clock
f_{EX}: External main system clock
f_{XT}: XT1 clock
f_{EXS}: External subsystem clock
f_{PLL}: PLL clock
f_{WDT}: WDT-dedicated low-speed on-chip oscillator clock

Table 23-1. Operating Statuses in HALT Mode (2/2)

Item \ HALT Mode Setting			When HALT Instruction Is Executed While CPU Is Operating on Subsystem Clock		When HALT Instruction Is Executed While CPU Is Operating on Low-speed On-chip Oscillator Clock (f_{IL})
			When CPU Is Operating on XT1 Clock (f_{XT})	When CPU Is Operating on External Subsystem Clock (f_{EXS})	
System clock			Clock supply to the CPU is stopped		
	Main system clock	f_{IH}	Operation disabled		
		f_X			
		f_{EX}			
		f_{PLL}			
	Subsystem clock	f_{XT}	Operation continues (cannot be stopped)	Cannot operate	Cannot operate
		f_{EXS}	Cannot operate	Operation continues (cannot be stopped)	
	f_{IL}		Set by bit 1 (HPIEN) of on-chip debug option byte (000C3H/020C3H), bit 0 (SELLOSC) of the CKSEL register, and bit 4 (WUTMMCK0) of the OSMC register. • WUTMMCK0 = 1: Oscillates • WUTMMCK0 = 0 and SELLOSC = 1: Oscillates • WUTMMCK0 = 0, SELLOSC = 0, and HPIEN = 1: Oscillates • WUTMMCK0 = 0, SELLOSC = 0, and HPIEN = 0: Stops		
f_{WDT}			Set by bits 0 (WDSTBYON) and 4 (WDTON) of user option byte (000C0H/020C0H) • WDTON = 0: Stops • WDTON = 1 and WDSTBYON = 1: Oscillates • WDTON = 1 and WDSTBYON = 0: Stops		
CPU			Operation stopped		
Code flash memory					
Data flash memory					
RAM			Operation stopped (operation can continue during DTC transfer)		
Port (latch)			Status before HALT mode was set is retained		
Timer array unit			Operable (Operation is disabled while in the low consumption RTC mode)		
Real-time clock (RTC)			Operable		
Watchdog timer			See **CHAPTER 11 WATCHDOG TIMER**		
Clock monitor			Operation stopped		
Timer RJ			Operable (Operation is disabled while in the low consumption RTC mode)		
Timer RD					
Clock output/buzzer output					
A/D converter			Operation disabled		
D/A converter					
Comparator					
Serial array unit (SAU)			Operable (Operation is disabled while in the low consumption RTC mode)		
Serial interface (IICA)			Operation disabled		
DTC			Operable		
ELC			Linking between operational function blocks is possible.		
LIN/UART module (RLIN3)			Operation disabled		
CAN interface (RS-CAN lite)					
Power-on-reset function			Operable		
Voltage detection function					
External interrupt					
Key interrupt function					

Item \ HALT Mode Setting		When HALT Instruction Is Executed While CPU Is Operating on Subsystem Clock		When HALT Instruction Is Executed While CPU Is Operating on Low-speed On-chip Oscillator Clock (f_{IL})
		When CPU Is Operating on XT1 Clock (f_{XT})	When CPU Is Operating on External Subsystem Clock (f_{EXS})	
CRC operation function	High-speed CRC	Operation disabled		
	General-purpose CRC	Operation stopped (operation can continue during DTC transfer)		
Illegal-memory access detection function				
RAM2 bit error detection function				
RAM guard function				
SFR guard function				
CPU stack pointer monitor function		Operation stopped (operation can continue during vectored interrupt servicing)		

Remark Operation stopped: Operation is automatically stopped before switching to the HALT mode.
Operation disabled: Operation is stopped before switching to the HALT mode.
Cannot operate: Operation is not possible regardless of switching to the HALT mode.

f_{IH}: High-speed on-chip oscillator clock
f_{IL}: Low-speed on-chip oscillator clock
f_X: X1 clock
f_{EX}: External main system clock
f_{XT}: XT1 clock
f_{EXS}: External subsystem clock
f_{PLL}: PLL clock
f_{WDT}: WDT-dedicated low-speed on-chip oscillator clock

(2) HALT mode release

The HALT mode can be released by interrupt and reset signal generation.

(a) Release by unmasked interrupt request

<R> When an interrupt request with an interrupt mask flag set to 0 (interrupt servicing enabled) is generated, the HALT mode is released. If interrupt acknowledgment is enabled, vectored interrupt servicing is carried out. If interrupt acknowledgment is disabled, the instruction at the next address after the HALT instruction is executed.

Figure 23-4. HALT Mode Release by Interrupt Request Generation

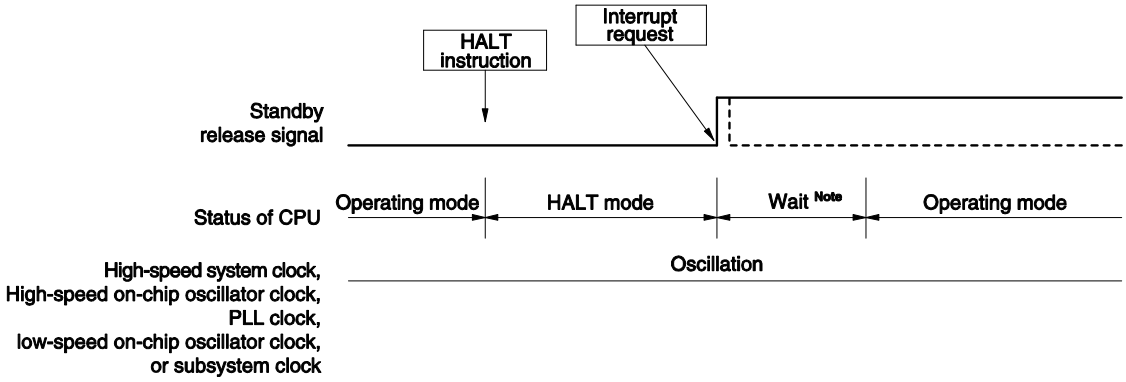

Note Wait time for HALT mode release

- When vectored interrupt servicing is carried out

Main/PLL select clock:	15 to 16 clocks
Subsystem/low-speed on-chip oscillator select clock (RTCLPC = 0):	10 to 11 clocks
Subsystem/low-speed on-chip oscillator select clock (RTCLPC = 1):	11 to 12 clocks

- When vectored interrupt servicing is not carried out

Main/PLL select clock:	9 to 10 clocks
Subsystem/low-speed on-chip oscillator select clock (RTCLPC = 0):	4 to 5 clocks
Subsystem/low-speed on-chip oscillator select clock (RTCLPC = 1):	5 to 6 clocks

Remark The broken lines indicate the case when the interrupt request which has released the standby mode is acknowledged.

(b) Release by reset signal generation

When the reset signal is generated, HALT mode is released, and then, as in the case with a normal reset operation, the program branches.

Figure 23-5. HALT Mode Release by Reset

(1) When high-speed system clock is used as CPU clock

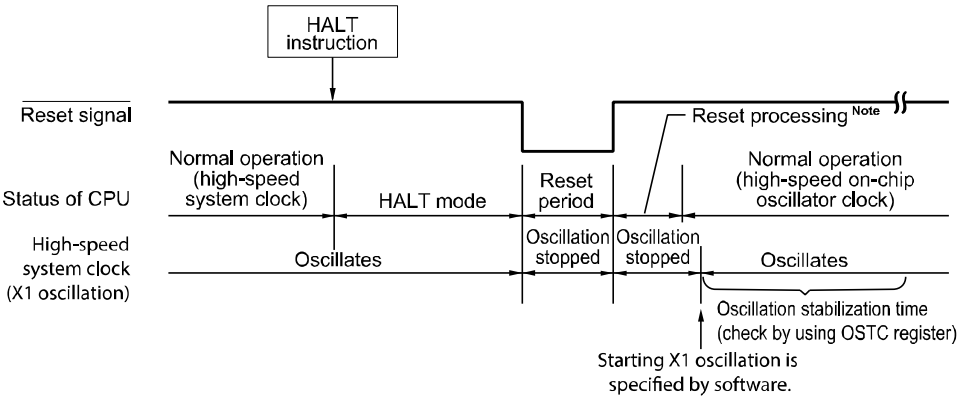

<R>

(2) When high-speed on-chip oscillator clock is used as CPU clock

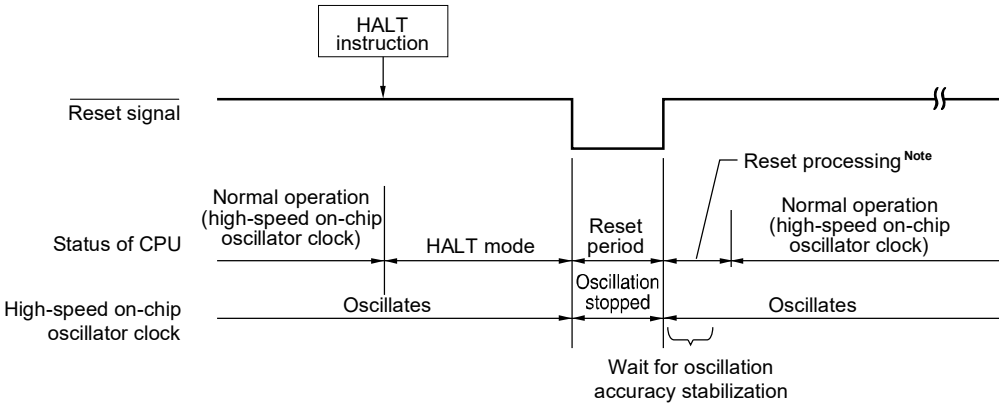

<R>

(3) When subsystem clock or low-speed on-chip oscillator clock is used as CPU clock

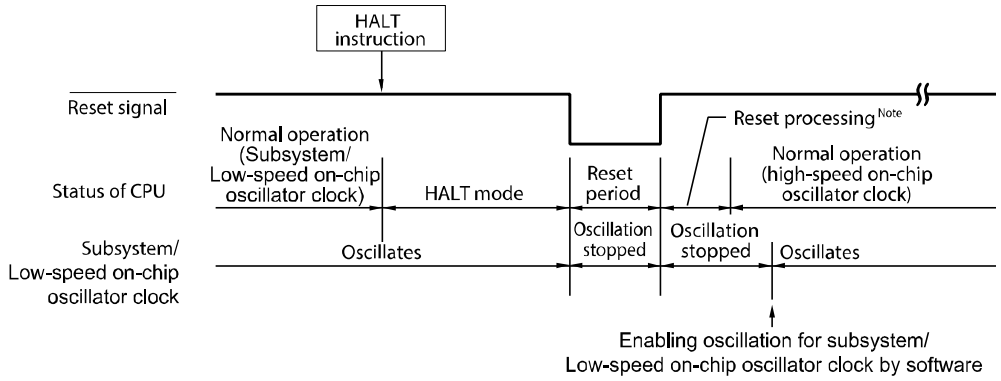

Note For the reset processing time, see **CHAPTER 25 POWER-ON-RESET CIRCUIT**.

23.3.2 STOP mode

(1) STOP mode setting and operating statuses

The STOP mode is set by executing the STOP instruction, and it can be set only when the CPU clock before the setting was the high-speed on-chip oscillator clock, X1 clock, or external main system clock.

Caution Because the interrupt request signal is used to clear the STOP mode, if the interrupt mask flag is 0 (interrupt servicing enabled) and the interrupt request flag is 1 (interrupt request signal is generated), the STOP mode is immediately cleared when the STOP instruction is executed. Accordingly, once the STOP instruction is executed, the system returns to its normal operating mode after the elapse of release time from the STOP mode.

The operating statuses in the STOP mode are shown below.

Table 23-2. Operating Statuses in STOP Mode

Item \ STOP Mode Setting	When STOP Instruction Is Executed While CPU Is Operating on Main System Clock			
	When CPU Is Operating on High-speed On-chip Oscillator clock (f_{IH})	When CPU Is Operating on X1 Clock (f_X)	When CPU Is Operating on External Main System Clock (f_{EX})	When CPU Is Operating on PLL Clock (f_{PLL})
System clock	Clock supply to the CPU is stopped			
Main system clock: f_{IH}	Stopped			
Main system clock: f_X				
Main system clock: f_{EX}				
Main system clock: f_{PLL}	Operation disabled			
Subsystem clock: f_{XT}	Status before STOP mode was set is retained			
Subsystem clock: f_{EXS}				
f_{IL}	Set by bit 0 (SELLOSC) of the CKSEL register and bit 4 (WUTMMCK0) of the OSMC register. • WUTMMCK0 = 1: Oscillates • WUTMMCK0 = 0 and SELLOSC = 1: Oscillates • WUTMMCK0 = 0 and SELLOSC = 0: Stops			
f_{WDT}	Set by bits 0 (WDSTBYON) and 4 (WDTON) of user option byte (000C0H/020C0H) • WDTON = 0: Stops • WDTON = 1 and WDSTBYON = 1: Oscillates • WDTON = 1 and WDSTBYON = 0: Stops			
CPU	Operation stopped			
Code flash memory				
<R> Data flash memory	Operation stopped			
RAM	Operation stopped			
Port (latch)	Status before STOP mode was set is retained			
Timer array unit	Operation disabled			
Real-time clock (RTC)	Operable (when the subsystem clock is selected as an input clock (f_{RTC}))			
Watchdog timer	See **CHAPTER 11 WATCHDOG TIMER**			
Clock monitor	Operation stopped			
Timer RJ	Operable • In the event counting mode when no TRJIO0 input filters are selected. • If the subsystem/low-speed on-chip oscillator select clock is selected as the clock source for counting and the RTCLPC bit of the OSMC register is 0. • If the low-speed on-chip oscillator is selected as the clock source for counting.			
Timer RD	Operable (can only operate for output of the SNOOZE status signal when the subsystem/low-speed on-chip oscillator select clock is selected)			
Clock output/buzzer output	Operable only when the subsystem/low-speed on-chip oscillator select clock is selected as the count clock			
A/D converter	Wakeup operation is enabled (switching to the SNOOZE mode)			
D/A converter	Operable (the state before the STOP mode was set is retained)			
Comparator	Operable (if the settings allow release from the STOP mode and the digital filters are not in use)			
Serial array unit (SAU)	Operation disabled			
Serial interface (IICA)	Wakeup operation by address match is enabled			
DTC	Reception of trigger signals from sources for DTC activation is enabled (switching to the SNOOZE mode)			
ELC	Linking between operational function blocks is possible.			
LIN/UART module (RLIN3)	Only wakeup operation of the UART is possible (switching to the SNOOZE mode).			
CAN interface (RS-CAN lite)	Operation disabled			
Power-on-reset function	Operable			
Voltage detection function				
External interrupt				
Key interrupt function				

Item \ STOP Mode Setting		When STOP Instruction Is Executed While CPU Is Operating on Main System Clock			
		When CPU Is Operating on High-speed On-chip Oscillator clock (f_{IH})	When CPU Is Operating on X1 Clock (f_X)	When CPU Is Operating on External Main System Clock (f_{EX})	When CPU Is Operating on PLL Clock (f_{PLL})
CRC operation function	High-speed CRC	Operation stopped			
	General-purpose CRC				
Illegal-memory access detection function					
RAM2 bit error detection function					
RAM guard function					
SFR guard function					
CPU stack pointer monitor function		Operation stopped (operation can continue during vectored interrupt servicing)			

Remark Operation stopped: Operation is automatically stopped before switching to the STOP mode.
Operation disabled: Operation is stopped before switching to the STOP mode.

f_{IH}: High-speed on-chip oscillator clock
f_{IL}: Low-speed on-chip oscillator clock
f_X: X1 clock
f_{EX}: External main system clock
f_{XT}: XT1 clock
f_{EXS}: External subsystem clock
f_{PLL}: PLL clock
f_{WDT}: WDT-dedicated low-speed on-chip oscillator clock

Cautions 1. To use the peripheral hardware that stops operation in the STOP mode, and the peripheral hardware for which the clock that stops oscillating in the STOP mode after the STOP mode is released, restart the peripheral hardware.

2. To stop the watchdog timer clock in the STOP mode, set bit 0 (WDSTBYON) of a user option byte (000C0H/020C0H) to 0 (stop the watchdog timer operation in the HALT/STOP/SNOOZE mode).

3. To shorten oscillation stabilization time after the STOP mode is released when the CPU operates with the high-speed system clock (X1 oscillation), temporarily switch the CPU clock to the high-speed on-chip oscillator clock before the execution of the STOP instruction. Before changing the CPU clock from the high-speed on-chip oscillator clock to the high-speed system clock (X1 oscillation) after the STOP mode is released, check the oscillation stabilization time with the oscillation stabilization time counter status register (OSTC).

(2) STOP mode release

The STOP mode can be released by interrupt and reset signal generation.

(a) Release by unmasked interrupt request

When an interrupt request with an interrupt mask set to 0 (Interrupt servicing enabled) is generated, the STOP mode is released. After the oscillation stabilization time has elapsed, if interrupt acknowledgment is enabled, vectored interrupt servicing is carried out. If interrupt acknowledgment is disabled, the instruction at the next address after the STOP instruction is executed. <R>

Figure 23-6. STOP Mode Release by Interrupt Request Generation (1/2)

(1) When high-speed system clock (X1 oscillation) is used as CPU clock

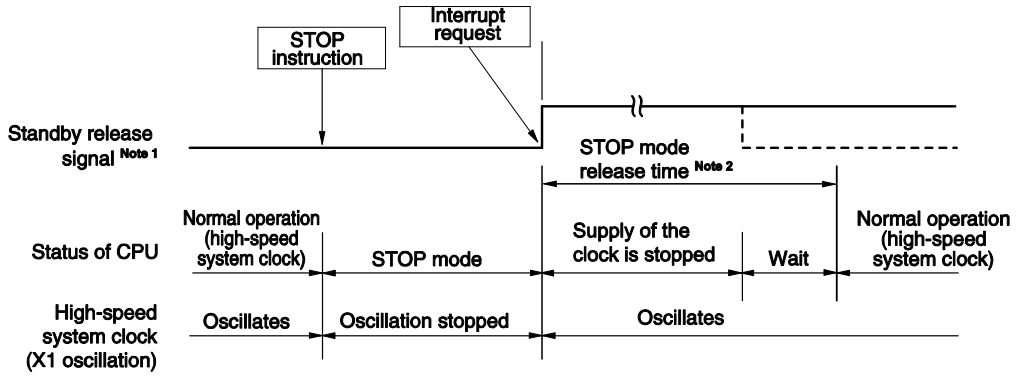

Notes **1.** For details of the standby release signal, see **Figure 21-1. Basic Configuration of Interrupt Function**.

2. STOP mode release time

Supply of the clock is stopped

- When FRQSEL4 = 1 in the user option byte (000C2H/020C2H):
  18 μs to "whichever is longer 105 μs and the oscillation stabilization time (set by OSTS)"
- When FRQSEL4 = 0 in the user option byte (000C2H/020C2H): <R>
  18 μs to "whichever is longer 65 μs and the oscillation stabilization time (set by OSTS)"

Wait

- When vectored interrupt servicing is carried out: 10 to 11 clocks
- When vectored interrupt servicing is not carried out: 4 to 5 clocks

Remarks 1. The clock supply stop time varies depending on the temperature conditions and STOP mode period.

2. The broken lines indicate the case when the interrupt request that has released the standby mode is acknowledged.

Figure 23-6. STOP Mode Release by Interrupt Request Generation (2/2)

(2) When high-speed system clock (external clock input) is used as CPU clock

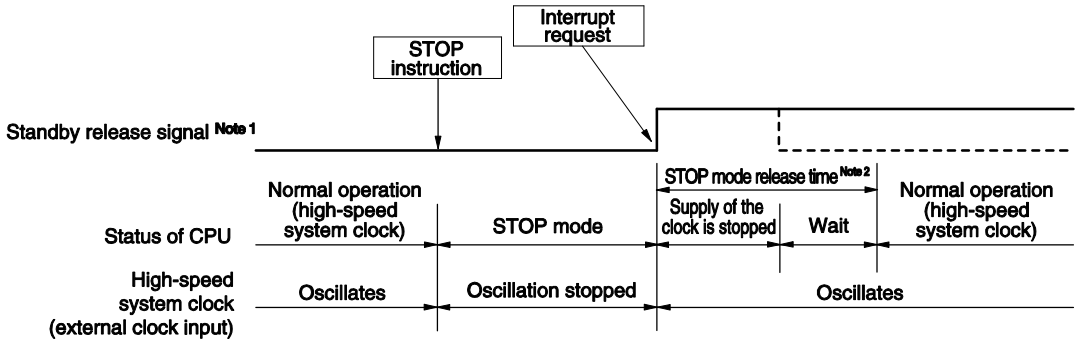

(3) When high-speed on-chip oscillator clock is used as CPU clock

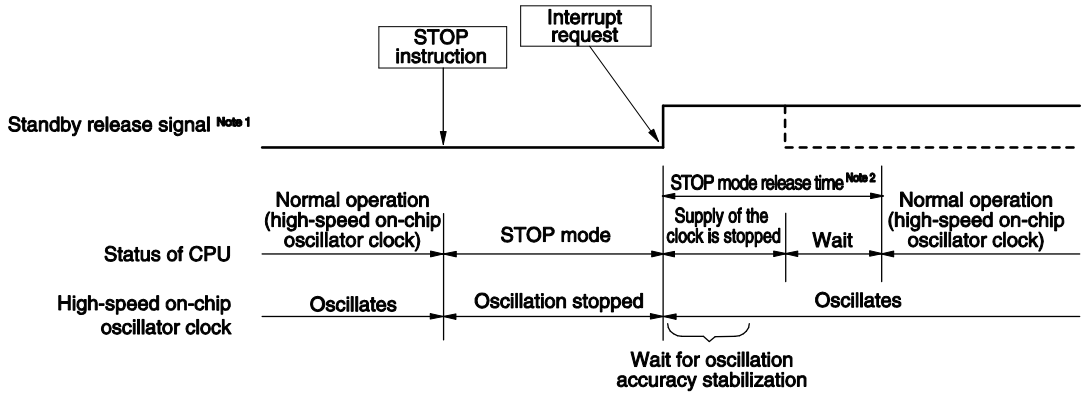

Notes **1.** For details of the standby release signal, see **Figure 21-1. Basic Configuration of Interrupt Function**.

2. STOP mode release time

Supply of the clock is stopped

- When FRQSEL4 = 1 in the user option byte (000C2H/020C2H):
  18 μs to 105 μs
- When FRQSEL4 = 0 in the user option byte (000C2H/020C2H):
  18 μs to 65 μs

Wait

- When vectored interrupt servicing is carried out: 7 clocks
- When vectored interrupt servicing is not carried out: 1 clock

Remarks **1.** The clock supply stop time varies depending on the temperature conditions and STOP mode period.

2. The broken lines indicate the case when the interrupt request that has released the standby mode is acknowledged.

(b) Release by reset signal generation

When the reset signal is generated, STOP mode is released, and then, as in the case with a normal reset operation, the program is executed after branching to the reset vector address.

Figure 23-7. STOP Mode Release by Reset

(1) When high-speed system clock is used as CPU clock

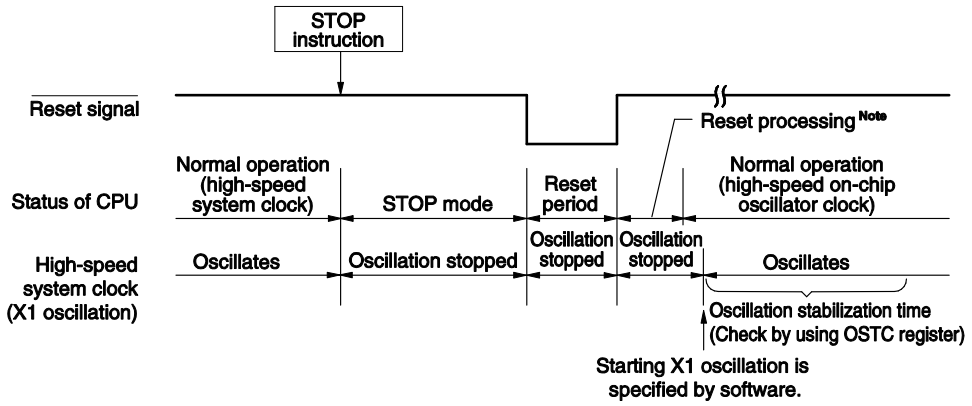

(2) When high-speed on-chip oscillator clock is used as CPU clock

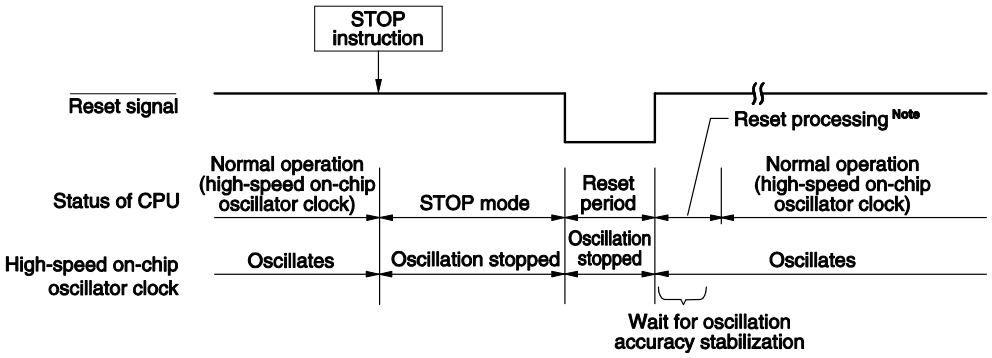

Note For the reset processing time, see **CHAPTER 25 POWER-ON-RESET CIRCUIT**.

23.3.3 SNOOZE mode

(1) SNOOZE mode setting and operating statuses

The SNOOZE mode can only be specified for the A/D converter, LIN/UART module, or DTC. Note that this mode can only be specified if the CPU clock is the high-speed on-chip oscillator clock.

When using the A/D converter in the SNOOZE mode, set up A/D converter mode register 2 (ADM2) before entering the STOP mode. For details, see **12.3 Registers Used in A/D Converter**.

When using the UART function of the LIN/UART module in the SNOOZE mode, set up the LUSCn register before entering the STOP mode.

When DTC transfer is used in SNOOZE mode, before entering the STOP mode, allow DTC activation by interrupt to be used. During STOP mode, detecting DTC activation by interrupt enables DTC transit to SNOOZE mode, automatically. For details, see **19.2 Registers**.

In SNOOZE mode transition, wait status to be only following time.

Transition time from STOP mode to SNOOZE mode

<R>
- When FRQSEL4 = 1 in the user option byte (000C2H/020C2H): 18 μs to 105 μs
- When FRQSEL4 = 0 in the user option byte (000C2H/020C2H): 18 μs to 65 μs

Remark Transition time from STOP mode to SNOOZE mode varies depending on the temperature conditions and the STOP mode period.

Transition time from SNOOZE mode to normal operation:
- When vectored interrupt servicing is carried out: "4.99 μs to 9.44 μs" + 7 clocks
- When vectored interrupt servicing is not carried out: "4.99 μs to 9.44 μs" + 1 clock

The operating statuses in the SNOOZE mode are shown below.

Table 23-3. Operating Statuses in SNOOZE Mode

Item \ STOP Mode Setting			During a period in STOP mode, input of a timer trigger signal for the A/D converter, reception of a data signal for the LIN/UART module in the UART mode, or the generation of an interrupt signal for DTC activation
			When CPU Is Operating on High-speed On-chip Oscillator Clock (f_{IH})
System clock			Clock supply to the CPU is stopped
	Main system clock	f_{IH}	Operation started
		f_X	Stopped
		f_{EX}	
		f_{PLL}	Operation disabled
	Subsystem clock	f_{XT}	Use of the status while in the STOP mode continues
		f_{EXS}	
	f_{IL}		Set by bit 0 (SELLOSC) of the CKSEL register and bit 4 (WUTMMCK0) of the OSMC register. • WUTMMCK0 = 1: Oscillates • WUTMMCK0 = 0 and SELLOSC = 1: Oscillates • WUTMMCK0 = 0 and SELLOSC = 0: Stops
f_{WDT}			Set by bits 0 (WDSTBYON) and 4 (WDTON) of user option byte (000C0H/020C0H) • WDTON = 0: Stops • WDTON = 1 and WDSTBYON = 1: Oscillates • WDTON = 1 and WDSTBYON = 0: Stops
CPU			Operation stopped
Code flash memory			
Data flash memory			
RAM			
Port (latch)			Use of the status while in the STOP mode continues
Timer array unit			Operation disabled
Real-time clock (RTC)			Operable (when the subsystem clock is selected as an input clock (f_{RTC}))
Watchdog timer			See **CHAPTER 11 WATCHDOG TIMER**
Clock monitor			Operation stopped
Timer RJ			Operable • In the event counting mode when no TRJIO0 input filters are selected. • If the subsystem/low-speed on-chip oscillator select clock is selected as the clock source for counting and the RTCLPC bit of the OSMC register is 0. • If the low-speed on-chip oscillator is selected as the clock source for counting.
Timer RD			Operable (can only operate for output of the SNOOZE status signal when the subsystem/low-speed on-chip oscillator select clock is selected)
Clock output/buzzer output			Operable only when the subsystem/low-speed on-chip oscillator select clock is selected as the count clock
A/D converter			Operable
D/A converter			Operable (the state before the STOP mode was set is retained)
Comparator			Operable (if the settings allow release from the STOP mode and the digital filters are not in use)
Serial array unit (SAU)			Operation disabled
Serial interface (IICA)			
DTC			Operable
ELC			Linking between operation function blocks is possible.
LIN/UART module (RLIN3)			Operable (only in the UART mode)
CAN interface (RS-CAN lite)			Operation disabled

Item \ STOP Mode Setting		During a period in STOP mode, input of a timer trigger signal for the A/D converter, reception of a data signal for the LIN/UART module in the UART mode, or the generation of an interrupt signal for DTC activation
		When CPU Is Operating on High-speed On-chip Oscillator Clock (f_{IH})
Power-on-reset function		Operable
Voltage detection function		
External interrupt		
Key interrupt function		
CRC operation function	High-speed CRC	Operation stopped
	General-purpose CRC	
Illegal-memory access detection function		
RAM2 bit error detection function		
RAM guard function		
SFR guard function		
CPU stack pointer monitor function		Operation stopped (operation can continue during vectored interrupt servicing)

Remark Operation stopped: Operation is automatically stopped before switching to the STOP mode.
Operation disabled: Operation is stopped before switching to the STOP mode.

f_{IH}: High-speed on-chip oscillator clock
f_{IL}: Low-speed on-chip oscillator clock
f_X: X1 clock
f_{EX}: External main system clock
f_{XT}: XT1 clock
f_{EXS}: External subsystem clock
f_{PLL}: PLL clock
f_{WDT}: WDT-dedicated low-speed on-chip oscillator clock

(2) SNOOZE mode status output (SNOOZEST)

This function is used to output the status of the SNOOZE mode (in any mode other than the SNOOZE mode or in the SNOOZE mode) on the specified pin.

This function is executed by f_{SL} (sub/low-speed on-chip oscillator select clock), timer RD0, event link controller (ELC) or A/D converter trigger select 0 control circuit **Note**, A/D converter, and ports simultaneously. f_{SL} is used as the count source for the timer RD0. By using the PWM function of the timer mode, the timer RD0 sets a period in the TRDGRA0 register and generates a compare match signal in the TRDGRB0 and TRDGRC0 registers. The compare match signal of the TRDGRB0 register is used as the operation trigger of the A/D converter via the ELC or A/D converter trigger select 0 control circuit **Note**. After receiving this operation trigger, the A/D converter performs A/D conversion in SNOOZE mode. After the compare match signal of the TRDGRC0 register is received, SNOOZE status is output from the SNZOUTn (n = 0 to 7) pin selected by the PSNZCNT0 to PSNZCNT3 registers.

Note The RL78/F14 uses the ELC and the RL78/F13 uses the A/D converter trigger select 0 control circuit.

Figure 23-8 shows the configuration of the circuit for SNOOZE mode status output. Figure 23-9 shows the timing of SNOOZE mode status output.

Figure 23-8. Configuration of Circuit for SNOOZE Mode Status Output

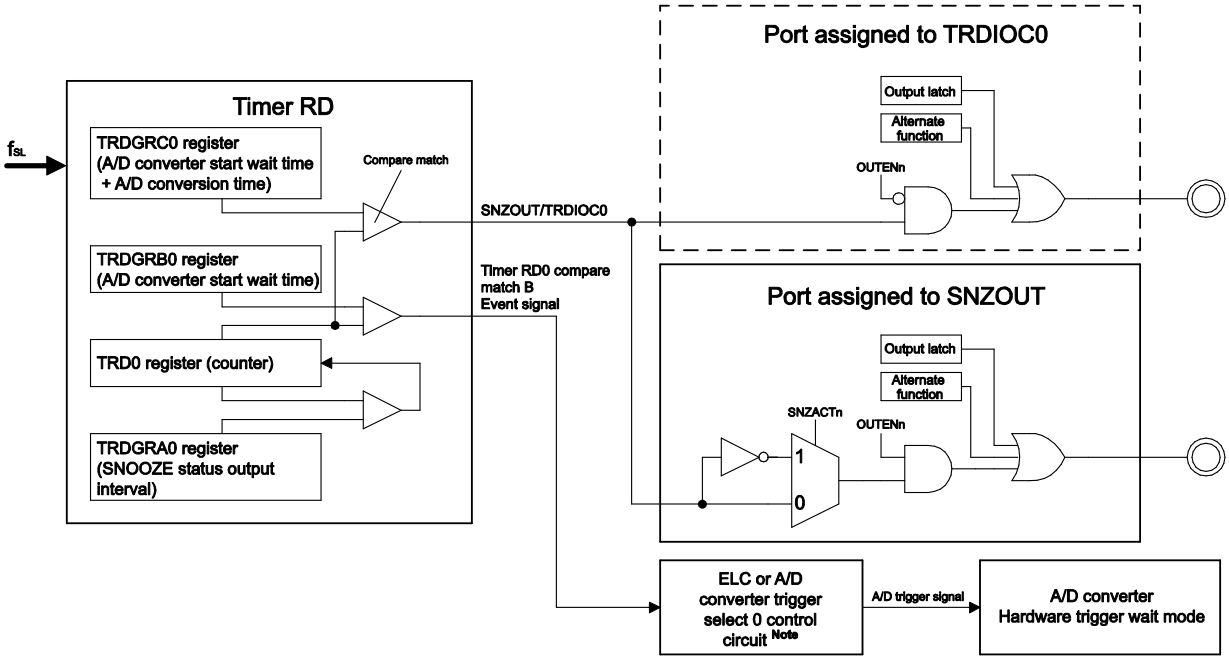

Note The RL78/F14 uses the ELC and the RL78/F13 uses the A/D converter trigger select 0 control circuit.

Figure 23-9. Timing of SNOOZE Mode Status Output

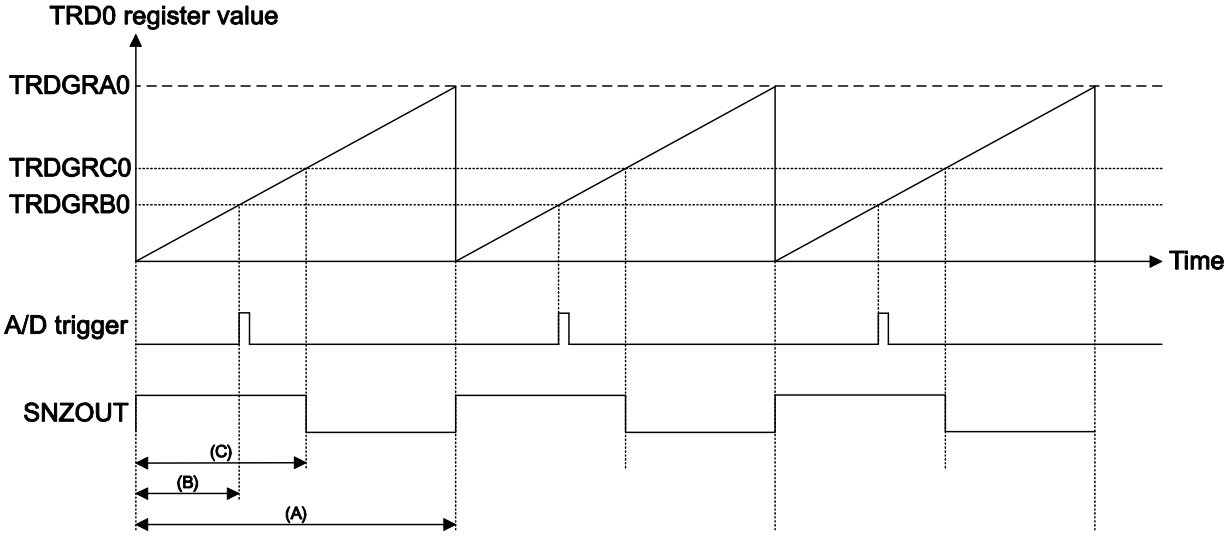

(A): TRDGRA0 = SNOOZE status output interval
(B): TRDGRB0 = A/D converter start wait time
(C): TRDGRC0 = A/D converter start wait time + A/D conversion time

Figure 23-10. Example of Settings for SNOOZE Mode Status Output

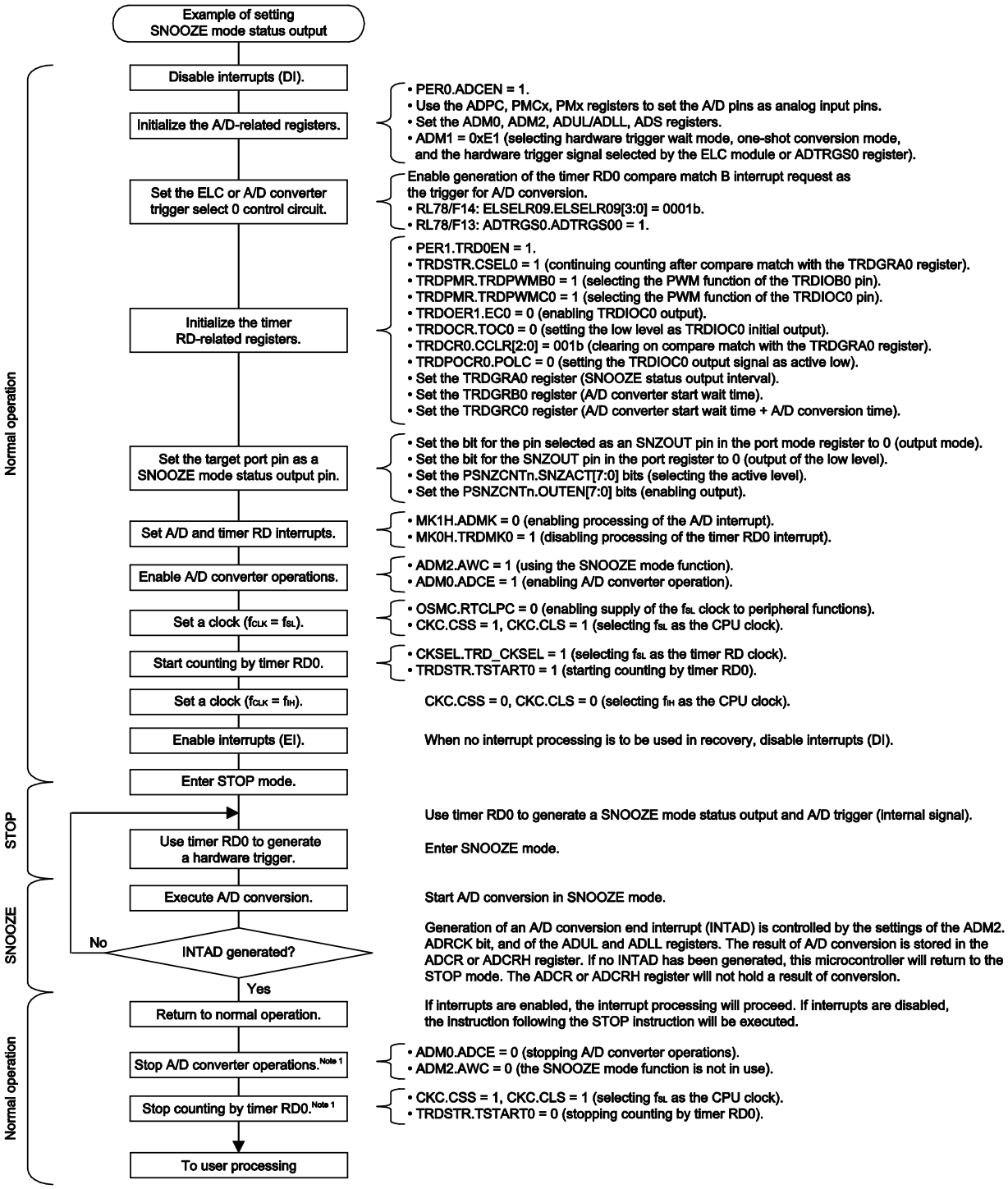

Note 1. On the transition from STOP (or SNOOZE) mode to normal operation, stop A/D converter operations and then stop counting by timer RD0 (after changing the CPU clock to f_{SL}) as shown in the figure above.

Caution For details on the settings of registers for the A/D converter, timer RD, port functions, etc., see the corresponding chapters.

CHAPTER 24 RESET FUNCTION

The following seven operations are available to generate a reset signal.

(1) External reset input via $\overline{\text{RESET}}$ pin
(2) Internal reset by watchdog timer program loop detection
(3) Internal reset by comparison of supply voltage and detection voltage of power-on-reset (POR) circuit
(4) Internal reset by comparison of supply voltage of the voltage detector (LVD) and detection voltage
(5) Internal reset by execution of illegal instruction **Note**
(6) Internal reset in response to the clock monitor detecting that oscillation of the main clock has stopped
(7) Internal reset by illegal-memory access

External and internal resets start program execution from the address at 0000H and 0001H when the reset signal is generated.

When a low level is input to the $\overline{\text{RESET}}$ pin, the watchdog timer detects an overflow, a voltage is detected on the POR and LVD circuits, an illegal instruction is executed **Note**, the clock monitor detects that oscillation of the main clock has stopped, or memory is accessed illegally, the device is reset and the hardware is set to the status shown in **Table 24-1**.

When a low level is input to the $\overline{\text{RESET}}$ pin, the device is reset. It is released from the reset status when a high level is input to the $\overline{\text{RESET}}$ pin and program execution is started with the high-speed on-chip oscillator clock after reset processing. A reset by the watchdog timer is automatically released, and program execution starts using the high-speed on-chip oscillator clock (see **Figures 24-2** to **24-4**) after reset processing. Reset by POR and LVD circuit supply voltage detection is automatically released when $V_{DD} \geq V_{POR}$ or $V_{DD} \geq V_{LVD}$ is detected after the reset, and program execution starts using the high-speed on-chip oscillator clock (see **CHAPTER 25 POWER-ON-RESET CIRCUIT** and **CHAPTER 26 VOLTAGE DETECTOR**) after reset processing.

Note The illegal instruction is generated when instruction code FFH is executed.
Reset by the illegal instruction execution not issued by emulation with the in-circuit emulator or on-chip debug emulator.

Cautions 1. For an external reset, input the low level to the $\overline{\text{RESET}}$ pin for at least 10 μs.
When an external reset is applied while the power supply voltage is rising, the period over which the voltage is below the range of operating voltage (V_{DD} < 2.7V) is not included in the 10 μs. However, continuing the input of a low level before release from the power-on reset state does not create a problem.
2. During reset input, the X1 clock, XT1 clock, high-speed on-chip oscillator clock, and low-speed on-chip oscillator clock stop oscillating. External main system clock input and external subsystem clock input become invalid.
3. When reset is effected, port pin P130 is set to low-level output and other port pins become high-impedance, because each SFR and 2nd SFR are initialized.

Remark V_{POR}: POR power supply rise detection voltage

Figure 24-1. Block Diagram of Reset Function

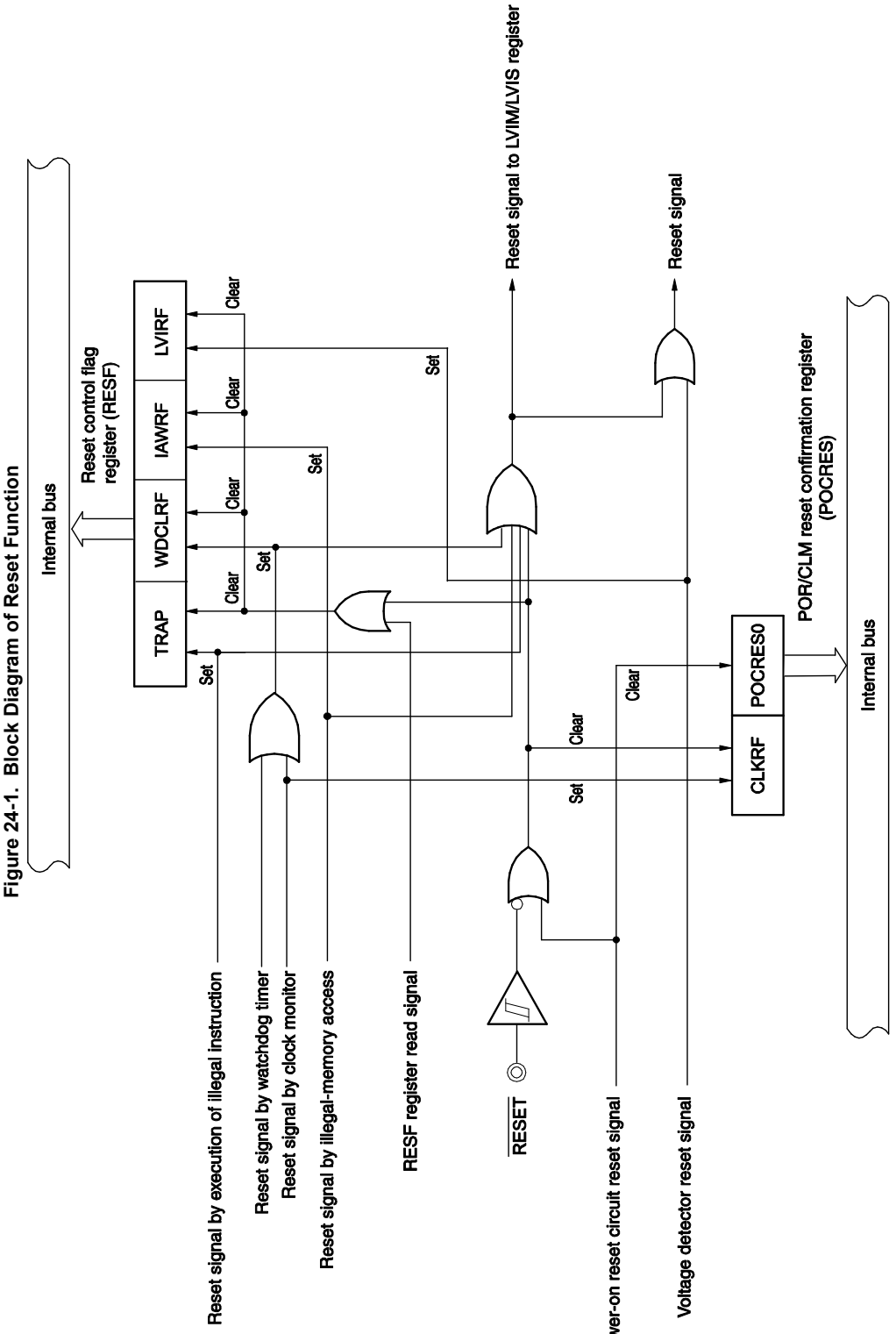

Caution An LVD circuit internal reset does not reset the LVD circuit.

Remarks 1. LVIM: Voltage detection register

2. LVIS: Voltage detection level register

Figure 24-2. Timing of Reset by $\overline{\text{RESET}}$ Input

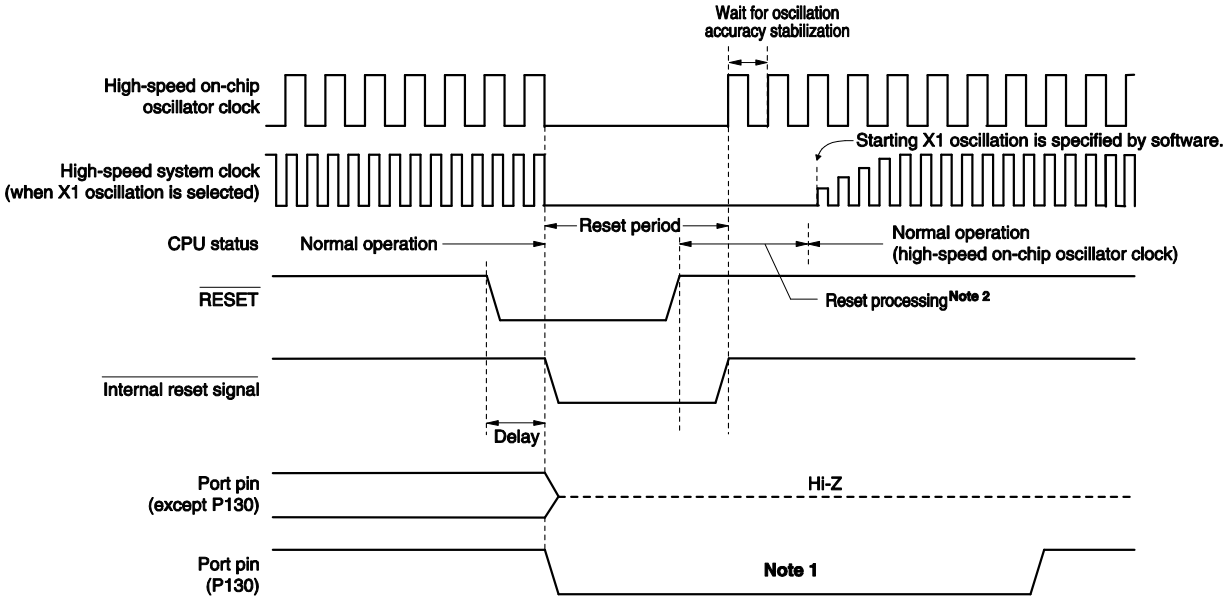

Figure 24-3. Timing of Reset by Watchdog Timer Overflow, Execution of Illegal Instruction, Clock Monitor, or Illegal-Memory Access

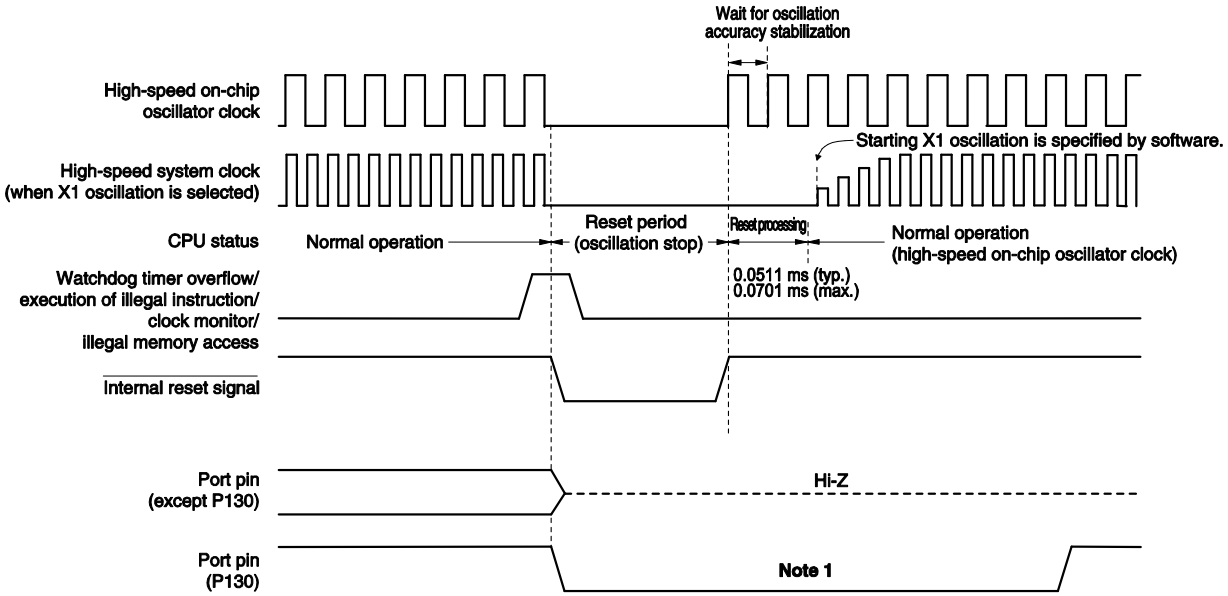

<R> (**Notes** and **Remark** are listed on the next page.)

Figure 24-4. Timing of Reset in STOP Mode by $\overline{\text{RESET}}$ Input

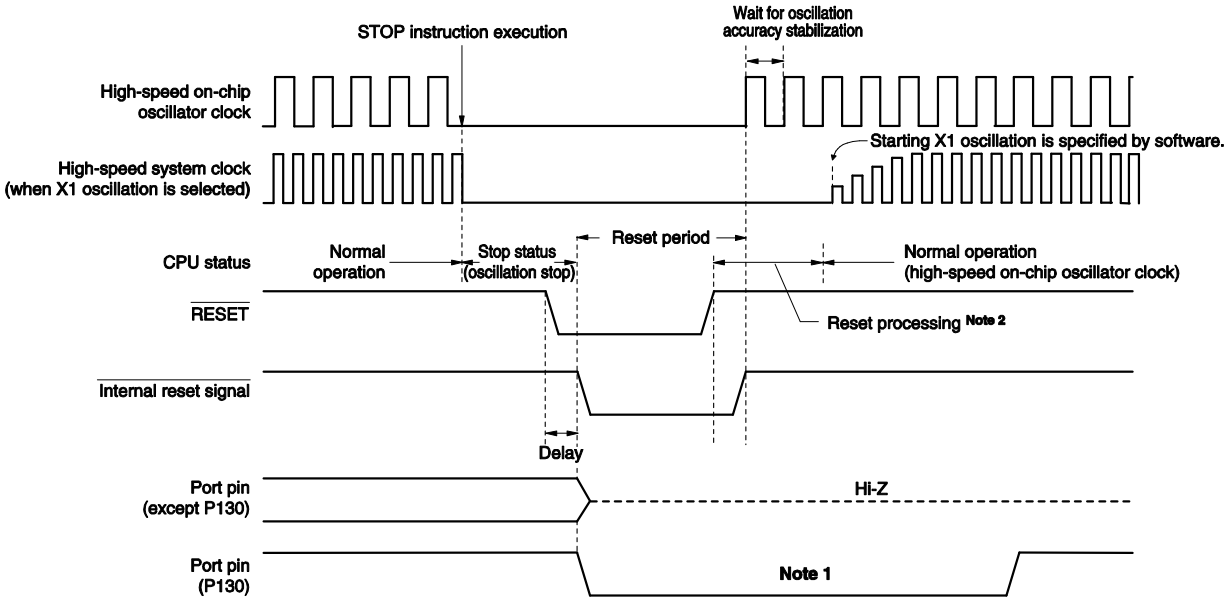

Notes 1. When P130 is set to high-level output before reset is effected, the output signal of P130 can be dummy-output as a reset signal to an external device, because P130 outputs a low level when reset is effected. To release a reset signal to an external device, set P130 to high-level output by software.

2. Reset processing time when the external reset is released is shown below.

After the first release of POR: 0.672 ms (typ.), 0.832 ms (max.) (when the LVD is in use)
0.399 ms (typ.), 0.519 ms (max.) (when the LVD is off)

After the second release of POR: 0.531 ms (typ.), 0.675 ms (max.) (when the LVD is in use)
0.259 ms (typ.), 0.362 ms (max.) (when the LVD is off)

After power is supplied, a voltage stabilization waiting time of about 0.99 ms (typ.) and up to 2.30 ms (max.) is required before reset processing starts after release of the external reset.

Remark For the reset timing of the power-on-reset circuit and voltage detector, see **CHAPTER 25 POWER-ON-RESET CIRCUIT** and **CHAPTER 26 VOLTAGE DETECTOR**.

Table 24-1. Operation Statuses During Reset Period

Item			During Reset Period
System clock			Clock supply to the CPU is stopped.
	Main system clock	f_{IH}	Operation stopped
		f_X	Operation stopped (the X1 and X2 pins are input port mode)
		f_{EX}	Clock input invalid (the pin is input port mode)
	Subsystem clock	f_{XT}	Operation stopped (the XT1 and XT2 pins are input port mode)
		f_{EXS}	Clock input invalid (the pin is input port mode)
	f_{IL}		Operation stopped
	f_{PLL}		
	f_{WDT}		
CPU			Operation stopped
Code flash memory			
Data flash memory			
RAM			
Port (latch)	P130		Outputs the low level
	P40		High impedance (by an external reset or POR reset) Pulled up (by reset other than external reset or POR reset)
	Other than P130 and P40		High impedance
Timer array unit			Operation stopped
Timer RJ			
Timer RD			
Real-time clock (RTC)			
Watchdog timer			
Clock monitor			
Clock output/buzzer output			
A/D converter			
D/A converter Note			
Comparator Note			
Serial array unit (SAU)			
Serial interface (IICA)			
LIN/UART module (RLIN3)			
CAN interface (RS-CAN lite)			
Multiplier and Divider/Multiply-Accumulator			
DTC			
ELC Note			
Power-on-reset function			Detection operation possible
Low-voltage detection function			Operation stopped
External interrupt			
Key interrupt function			
CRC operation function	High-speed CRC		
	General-purpose CRC		
Illegal-memory access detection function			
RAM guard function			
SFR guard function			

Note RL78/F14 only.

Remark f_{IH}: High-speed on-chip oscillator clock
f_{EX}: External main system clock
f_{EXS}: External subsystem clock
f_{PLL}: PLL clock
f_X: X1 oscillation clock
f_{XT}: XT1 oscillation clock
f_{IL}: Low-speed on-chip oscillator clock
f_{WDT}: WDT-dedicated low-speed on-chip oscillator clock

Table 24-2. States of Hardware After Acceptance of a Reset (1/4)

Hardware		After Acceptance of a Reset Note 1
Program counter (PC)		The contents of the reset vector table (0000H, 0001H) are set.
Stack pointer (SP)		Undefined
Program status word (PSW)		06H
RAM	Data memory	Undefined
	General-purpose registers	Undefined
Port mode select register (PMS)		00H
Noise filter enable registers 0 to 2 (NFEN0 to NFEN2)		00H
Peripheral enable registers 0 to 2 (PER0 to PER2)		00H
High-speed on-chip oscillator frequency select register (HOCODIV)		Undefined
High-speed on-chip oscillator trimming register (HIOTRM)		**Note 2**
Operation speed mode control register (OSMC)		00H
Port register 0 (P0)		00H
Port register 1 (P1)		00H
Port register 3 (P3)		00H
Port register 4 (P4)		00H
Port register 5 (P5)		00H
Port register 6 (P6)		00H
Port register 7 (P7)		00H
Port register 8 (P8)		00H
Port register 9 (P9)		00H
Port register 10 (P10)		00H
Port register 12 (P12)		Undefined
Port register 13 (P13)		Undefined
Port register 14 (P14)		00H
Port register 15 (P15)		00H
Serial data register 00 (SDR00)		0000H
Serial data register 01 (SDR01)		0000H
Timer data register 00 (TDR00)		0000H
Timer data register 01 (TDR01/L/H)		00H
10-bit A/D conversion result register (ADCR)		0000H
8-bit A/D conversion result register (ADCRH)		00H
Port mode register 0 (PM0)		FFH
Port mode register 1 (PM1)		FFH
Port mode register 3 (PM3)		FFH
Port mode register 4 (PM4)		FFH
Port mode register 5 (PM5)		FFH
Port mode register 6 (PM6)		FFH
Port mode register 7 (PM7)		FFH
Port mode register 8 (PM8)		FFH
Port mode register 9 (PM9)		FFH
Port mode register 10 (PM10)		FFH
Port mode register 12 (PM12)		FFH
Port mode register 14 (PM14)		FFH
Port mode register 15 (PM15)		FFH
A/D converter mode register 0 (ADM0)		00H
Analog input channel specification register (ADS)		00H
A/D converter mode register 1 (ADM1)		00H
D/A conversion value setting register 0 (DACS0)		00H
D/A converter mode register (DAM)		00H
Key return mode register (KRM)		00H
External interrupt rising edge enable register 0 (EGP0)		00H

(**Notes** and **Remark** are given below Table 24-2, States of Hardware After Acceptance of a Reset (4/4).)

Table 24-2. States of Hardware After Acceptance of a Reset (2/4)

Hardware	After Acceptance of a Reset[Note 1]
External interrupt falling edge enable register 0 (EGN0)	00H
External interrupt rising edge enable register 1 (EGP1)	00H
External interrupt falling edge enable register 1 (EGN0)	00H
Serial data register 10 (SDR10)	0000H
Serial data register 11 (SDR11)	0000H
IICA shift register 0 (IICA0)	00H
IICA status register 0 (IICS0)	00H
IICA flag register 0 (IICF0)	00H
16-bit watch error correction register (SUBCUDW)	0000H
Timer RD general register C0 (TRDGRC0)	FFFFH[Note 3]
Timer RD general register D0 (TRDGRD0)	FFFFH[Note 3]
Timer RD general register C1 (TRDGRC1)	FFFFH[Note 3]
Timer RD general register D1 (TRDGRD1)	FFFFH[Note 3]
Timer data register 02 (TDR02)	0000H
Timer data register 03 (TDR03/L/H)	00H
Timer data register 04 (TDR04)	0000H
Timer data register 05 (TDR05)	0000H
Timer data register 06 (TDR06)	0000H
Timer data register 07 (TDR07)	0000H
Timer data register 10 (TDR10)	0000H
Timer data register 11 (TDR11/L/H)	00H
Timer data register 12 (TDR12)	0000H
Timer data register 13 (TDR13/L/H)	00H
Timer data register 14 (TDR14)	0000H
Timer data register 16 (TDR16)	0000H
Timer data register 17 (TDR17)	0000H
Second count register (SEC)	00H
Minute count register (MIN)	00H
Hour count register (HOUR)	12H[Note 4]
Week count register (WEEK)	00H
Day count register (DAY)	01H
Month count register (MONTH)	01H
Year count register (YEAR)	00H
Watch error correction register (SUBCUD)	00H
Alarm minute register (ALARMWM)	00H
Alarm hour register (ALARMWH)	12H
Alarm week register ALARMWW)	00H
Real-time clock control register 0 (RTCC0)	00H
Real-time clock control register 1 (RTCC1)	00H
Clock operation mode control register (CMC)	00H
Clock operation status control register (CSC)	C0H
Oscillation stabilization time counter status register (OSTC)	00H
Oscillation stabilization time select register (OSTS)	07H
System clock control register (CKC)	00H
Clock output select register 0 (CKS0)	00H
Reset control flag register (RESF)	Undefined[Note 5]
Voltage detection register (LVIM)	00H[Note 5]
Voltage detection level register (LVIS)	00H/01H/81H[Note 6]
Watchdog timer enable register (WDTE)	1AH/9AH[Note 7]
CRC input register (CRCIN)	00H
Interrupt request flag register 2 (IF2/L/H)	00H

(**Notes** and **Remark** are given below Table 24-2, States of Hardware After Acceptance of a Reset (4/4).)

Table 24-2. States of Hardware After Acceptance of a Reset (3/4)

Hardware	After Acceptance of a Reset[Note 1]
Interrupt request flag register 3L (IF3L)	00H
Interrupt mask flag register 2 (MK2/L/H)	FFH
Interrupt mask flag register 3 (MK3L)	FFH
Priority specification flag register 02 (PR02/L/H)	FFH
Priority specification flag register 03 (PR03L)	FFH
Priority specification flag register 12 (PR12/L/H)	FFH
Priority specification flag register 13 (PR13L)	FFH
Interrupt request flag register 0 (IF0/L/H)	00H
Interrupt request flag register 1 (IF1/L/H)	00H
Interrupt mask flag register 0 (MK0/L/H)	FFH
Interrupt mask flag register 1 (MK1/L/H)	FFH
Priority specification flag register 00 (PR00/L/H)	FFH
Priority specification flag register 01 (PR01/L/H)	FFH
Priority specification flag register 10 (PR10/L/H)	FFH
Priority specification flag register 11 (PR11/L/H)	FFH
Multiply and accumulation register (L) (MACRL)	0000H
Multiply and accumulation register (H) (MACRH)	0000H
Processor mode control register (PMC)	00H
Comparator control register (CMPCTL)	00H
Comparator input and output switching register (CMPSEL)	00H
Comparator output monitor register (CMPMON)	00H
CAN clock select register (CANCKSEL)	00H
LIN clock select register (LINCKSEL)	00H
Clock select register (CKSEL)	00H
PLL control register (PLLCTL)	00H
PLL status register (PLLSTS)	00H
POR/CLM reset confirmation register (POCRES)	Undefined
High-speed DTC control register 0 (HDTCCR0)	00H
High-speed DTC transfer count register 0 (HDTCCT0)	00H
High-speed DTC transfer count reload register 0 (HDTRLD0)	00H
High-speed DTC source address register 0 (HDTSAR0)	0000H
High-speed DTC destination address register 0 (HDTDAR0)	0000H
High-speed DTC control register 1 (HDTCCR1)	00H
High-speed DTC transfer count register 1 (HDTCCT1)	00H
High-speed DTC transfer count reload register 1 (HDTRLD1)	00H
High-speed DTC source address register 1 (HDTSAR1)	0000H
High-speed DTC destination address register 1 (HDTDAR1)	0000H
DTC base address register (DTCBAR)	FDH
High-speed DTC channel select register 0 (SELHS0)	3FH
High-speed DTC channel select register 1 (SELHS1)	3FH
DTC activation enable register 0 (DTCEN0)	00H
DTC activation enable register 1 (DTCEN1)	00H
DTC activation enable register 2 (DTCEN2)	00H
DTC activation enable register 3 (DTCEN3)	00H
DTC activation enable register 4 (DTCEN4)	00H
DTC activation enable register 5 (DTCEN5) [Note 8]	00H
CRC operation mode control register (CRCMD)	00H
CRC data register (CRCD)	0000H
LIN wakeup baud rate select register (LWBR0/LWBR1)	00H

(**Notes** and **Remark** are given below Table 24-2, States of Hardware After Acceptance of a Reset (4/4).)

Table 24-2. States of Hardware After Acceptance of a Reset (4/4)

Hardware	After Acceptance of a Reset Note 1
LIN channel select register (LCHSEL)	00H
LIN/UART baud rate prescaler 0 register (LBRP00/LBRP10)	00H
LIN/UART baud rate prescaler 1 register (LBRP01/LBRP11)	00H
LIN self test control register (LSTC0/LSTC1)	00H
UART standby control register (LUSC0/LUSC1)	00H
LIN/UART mode register (LMD0/LMD1)	00H
LIN break field configuration register/UART configuration register (LBFC0/LBFC1)	00H
LIN/UART space configuration register (LSC0/LSC1)	00H
LIN wakeup configuration register (LWUP0/LWUP1)	00H
LIN interrupt enable register (LIE0/LIE1)	00H
LIN/UART error detection enable register (LEDE0/LEDE1)	00H
LIN/UART control register (LCUC0/LCUC1)	00H
LIN/UART transmit control register (LTRC0/LTRC1)	00H
LIN/UART mode status register (LMST0/LMST1)	00H
LIN/UART status register (LST0/LST1)	00H
LIN/UART error status register (LEST0/LEST1)	00H
LIN/UART data field configuration register (LDFC0/LDFC1)	00H
LIN/UART ID buffer register (LIDB0/LIDB1)	00H
LIN checksum buffer register (LCBR0/LCBR1)	00H
UART data buffer 0 register (LUDB00/LUDB10)	00H
LIN/UART data buffer 1 register (LDB01/LDB11)	00H
LIN/UART data buffer 2 register (LDB02/LDB12)	00H
LIN/UART data buffer 3 register (LDB03/LDB13)	00H
LIN/UART data buffer 4 register (LDB04/LDB14)	00H
LIN/UART data buffer 5 register (LDB05/LDB15)	00H
LIN/UART data buffer 6 register (LDB06/LDB16)	00H
LIN/UART data buffer 7 register (LDB07/LDB17)	00H
LIN/UART data buffer 8 register (LDB08/LDB18)	00H
UART operation enable register (LUOER0/LUOER1)	00H
UART option register 1 (LUOR01/LUOR11)	00H
UART transmit data register (LUTDR0/LUTDR1)	0000H
UART receive data register (LURDR0/LURDR1)	0000H
UART wait transmission data register (LUWTDR0/LUWTDR1)	0000H
CAN-related registers	See **Table 3-6**.

Notes 1. During reset signal generation or oscillation stabilization time wait, only the PC contents among the hardware statuses become undefined. All other hardware statuses remain unchanged after reset.

2. The reset value differs for each chip.

<R> **3.** The timer RD SFRs are undefined when FRQSEL4 = 1 in the user option byte (000C2H/020C2H) and TRD0EN = 0 in the PER1 register. If it is necessary to read the initial value, set f_{CLK} to f_{IH} and TRD0EN = 1 before reading.

4. If the AMPM bit (bit 3 of the real-time clock control register 0 (RTCC0)) is set to 1 after a reset, the setting of the hour count register (HOUR) becomes 00H.

5. The values depend on the source of the reset as shown in Table 24-3.

6. The reset value of the LVIS register varies depending on the reset source and the setting of the option byte.

7. The reset value of WDTE is determined by the option byte setting.

8. Only in the RL78/F14.

Remark The special function register (SFR) mounted depends on the product. See **3.1.4 Special function register (SFR) area** and **3.1.5 Extended special function register (2nd SFR: 2nd Special Function Register) area**.

Table 24-3. States of Bits in RESF/LVIM/LVIS Registers When Reset Requests are Generated

Register \ Reset Source		$\overline{\text{RESET}}$ Input	Reset by POR	Reset by Execution of Illegal Instruction	Reading from RESF	Reset by WDT	Reset by clock monitor	Reset by illegal-memory access	Reset by LVD
RESF	TRAP	Cleared (0)	Cleared (0)	Set (1)	Cleared (0)	Held	Held	Held	Held
	WDCLRF			Held		Set (1)	Set (1)	Held	Held
	IAWRF			Held		Held	Held	Set (1)	Held
	LVIRF			Held		Held	Held	Held	Set (1)
POCRES	POCRES0	Held	Cleared (0)	Held	Held	Held	Held	Held	Held
	CLKRF	Cleared (0)	Cleared (0)	Held	Held	Held	Set (1)	Held	Held
LVIM	LVISEN	Cleared (0)	Cleared (0)	Cleared (0)	Held	Cleared (0)	Cleared (0)	Cleared (0)	Held
	LVIOMSK	Held	Held	Held	Held	Held	Held	Held	Held
	LVIF	Held	Held	Held	Held	Held	Held	Held	Held
LVIS		Cleared (00H/01H/81H)	Cleared (00H/01H/81H)	Cleared (00H/01H/81H)	Held	Cleared (00H/01H/81H)	Cleared (00H/01H/81H)	Cleared (00H/01H/81H)	Held

Caution The generation of reset signal other than an LVD reset sets as follows.

- **When option byte LVIMDS1, LVIMDS0 = 1, 0: 00H**
- **When option byte LVIMDS1, LVIMDS0 = 1, 1: 81H**
- **When option byte LVIMDS1, LVIMDS0 = 0, 1: 01H**

Remark The special function register (SFR) mounted depends on the product. See **3.1.4 Special function register (SFR) area** and **3.1.5 Extended special function register (2nd SFR: 2nd Special Function Register) area**.

24.1 Register for Confirming Reset Source

24.1.1 Reset control flag register (RESF)

Many internal reset generation sources exist in the RL78/F13 and RL78/F14. The reset control flag register (RESF) is used to store which source has generated the reset request.

The RESF register can be read by an 8-bit memory manipulation instruction.

$\overline{\text{RESET}}$ input, reset by power-on-reset (POR) circuit, and reading the RESF register clear TRAP, WDCLRF, IAWRF, and LVIRF flags.

Figure 24-5. Format of Reset Control Flag Register (RESF)

Address: FFFA8H After reset: 00H Note 1 R

Symbol	7	6	5	4	3	2	1	0
RESF	TRAP	0	0	WDCLRF	0	0	IAWRF	LVIRF

TRAP	Internal reset request by execution of illegal instruction Note 2
0	Internal reset request is not generated, or the RESF register is cleared.
1	Internal reset request is generated.

WDCLRF	Internal reset request by watchdog timer (WDT) or clock monitor
0	Internal reset request is not generated, or the RESF register is cleared.
1	Internal reset request by the watchdog timer or the clock monitor is generated.

IAWRF	Internal reset request by illegal-memory access
0	Internal reset request is not generated, or the RESF register is cleared.
1	Internal reset request is generated.

LVIRF	Internal reset request by voltage detector (LVD)
0	Internal reset request is not generated, or the RESF register is cleared.
1	Internal reset request is generated.

Notes 1. The value after reset varies depending on the reset source.

2. The illegal instruction is generated when instruction code FFH is executed.
Reset by the illegal instruction execution not issued by emulation with the in-circuit emulator or on-chip debug emulator.

Caution Do not read data by a 1-bit memory manipulation instruction.

The states of bits in the RESF register when reset requests are generated is shown in Table 24-4.

Table 24-4. States of Bits in the RESF Register When Reset Requests are Generated

Flag \ Reset Source	$\overline{\text{RESET}}$ Input	Reset by POR	Reset by Execution of Illegal Instruction	Reading from RESF	Reset by WDT	Reset by clock monitor	Reset by illegal-memory access	Reset by LVD
TRAP bit	Cleared (0)	Cleared (0)	Set (1)	Cleared (0)	Held	Held	Held	Held
WDCLRF bit			Held		Set (1)	Set (1)	Held	Held
IAWRF bit			Held		Held	Held	Set (1)	Held
LVIRF bit			Held		Held	Held	Held	Set (1)

24.1.2 POR/CLM reset confirmation register (POCRES)

The POR/CLM reset confirmation register (POCRES) is used to check whether a reset has been generated by a power-on reset or a clock-monitor reset.

When writing, the only effective value for the POCRES0 bit is 1. Writing 0 to this bit is ignored.

When writing, the only effective value for the CLKRF bit is 0. Writing 1 to this bit is ignored.

Set the POCRES register by a 1-bit or 8-bit memory manipulation instruction.

The POCRES0 bit only becomes 0 after a reset when the reset was generated by the power-on reset (POR) circuit.

The CLKRF bit becomes 0 after a reset when the reset was generated by the $\overline{\text{RESET}}$ input or power-on reset (POR) circuit.

Remark For confirming whether a reset was by the power-on reset (POR) circuit, the POCRES0 must be set to 1 beforehand.

Figure 24-6. Format of POR Reset Register (POCRES)

Address: F02C9H After reset: 00H [Note] R/W

Symbol	7	6	5	<4>	3	2	1	<0>
POCRES	0	0	0	CLKRF	0	0	0	POCRES0

POCRES0	Internal reset request by POR reset
0	A POR request was generated or nothing has been written to this bit.
1	POR request is not generated.

Note The value immediately before a reset is retained when a reset is from any source other than the POR circuit.

CLKRF	Internal reset request by clock monitor
0	Internal reset request is not generated, or the CLKRF bit is cleared.
1	Internal reset request was generated.

Table 24-5 shows the states of bits in the POCRES register when reset requests are generated.

Table 24-5. States of Bits in the POCRES Register When Reset Requests are Generated

Flag \ Reset Source	$\overline{\text{RESET}}$ Input	Reset by POR	Reset by Execution of Illegal Instruction	Reading from RESF	Reset by WDT	Reset by clock monitor	Reset by illegal-memory access	Reset by LVD
POCRES0	Held	Cleared (0)	Held	Held	Held	Held	Held	Held
CLKRF	Cleared (0)	Cleared (0)	Held	Held	Held	Set (1)	Held	Held

CHAPTER 25 POWER-ON-RESET CIRCUIT

25.1 Functions of Power-on-reset Circuit

The power-on-reset circuit (POR) has the following functions.

- Generates internal reset signal at power on.
  The reset signal is released when the supply voltage (V_{DD}) exceeds 1.56 V (typ.).

- Compares supply voltage (V_{DD}) and detection voltage (V_{PDR} = 1.55 V (typ.)), generates internal reset signal when V_{DD} < V_{PDR}.

<R> **Caution If an internal reset signal is generated in the POR circuit, the POCRES0 and CLKRF flags of the POR/CLM reset confirmation register (POCRES) and the TRAP, WDCLRF, IAWRF, and LVIRF flags of the reset control flag register (RESF) are cleared (00H).**

Remark This product incorporates multiple hardware functions that generate an internal reset signal. A flag that indicates the reset source is located in the RESF and POCRES registers for when an internal reset signal is generated by the power-on reset (POR), watchdog timer (WDT), clock monitor, voltage detector (LVD), illegal instruction execution, or illegal-memory access. The RESF register is not cleared to 00H and the flag is set to 1 when an internal reset signal is generated by the watchdog timer (WDT), voltage detector
<R> (LVD), illegal instruction execution, clock monitor, or illegal-memory access. The CLKRF bit of the POCRES register is set to 1 when an internal reset signal is generated by the clock monitor. The POCRES0 bit of the POCRES register is cleared to 0 by the POR reset when it has been set to 1 beforehand.
For details of the POCRES and RESF registers, see **CHAPTER 24 RESET FUNCTION**.

25.2 Configuration of Power-on-reset Circuit

The block diagram of the power-on-reset circuit is shown in Figure 25-1.

Figure 25-1. Block Diagram of Power-on-reset Circuit

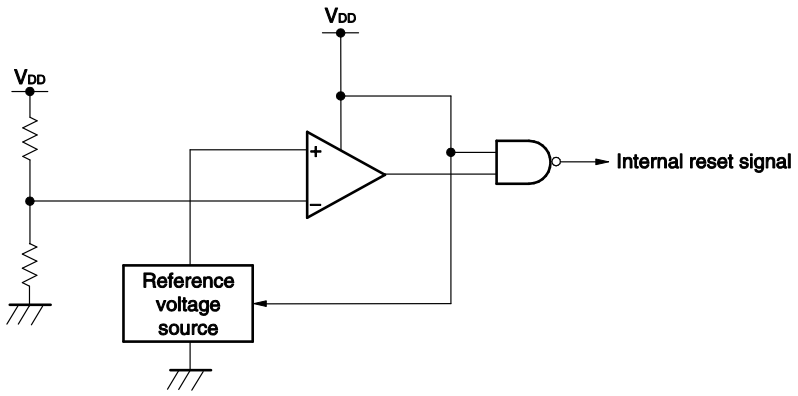

25.3 Operation of Power-on-reset Circuit

- An internal reset signal is generated on power application. When the supply voltage (V_{DD}) exceeds the detection voltage (V_{POR} = 1.56 V (typ.)[Note]), the reset status is released.

- The supply voltage (V_{DD}) and detection voltage (V_{PDR} = 1.55 V (typ.)[Note]) are compared. When $V_{DD} < V_{PDR}$, the internal reset signal is generated.

Note When the user option byte function is used to enable the voltage detector by default, release from the reset state does not proceed until the value set in the option byte function is exceeded.

The timing of generation of the internal reset signal by the power-on-reset circuit and voltage detector is shown below.

Figure 25-2. Timing of Generation of Internal Reset Signal by Power-on-reset Circuit and Voltage Detector (1/2)

(1) When the externally input reset signal on the $\overline{\text{RESET}}$ pin is used

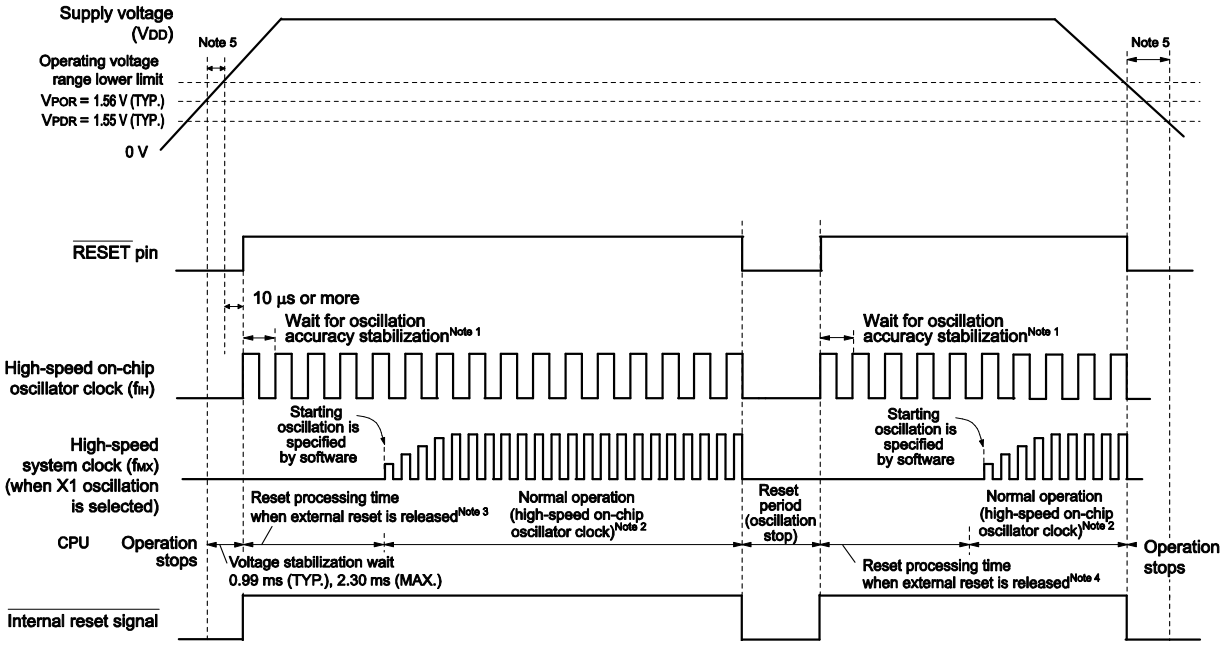

Notes 1. The internal reset processing time includes the oscillation accuracy stabilization time of the high-speed on-chip oscillator clock.

2. The high-speed on-chip oscillator clock and a high-speed system clock or subsystem clock can be selected as the CPU clock. To use the X1 clock, use the oscillation stabilization time counter status register (OSTC) to confirm the lapse of the oscillation stabilization time. To use the XT1 clock, use the timer function for confirmation of the lapse of the stabilization time.

<R> **3.** The time until normal operation starts includes the following reset processing time when the external reset is released (release from the first external reset following release from the POR state) after the $\overline{\text{RESET}}$ signal is driven high (1) as well as the voltage stabilization wait time after V_{POR} (1.56 V, typ.) is reached.

<R> Reset processing time when the external reset is released is shown below.

Release from the first external reset following release from the POR state:

0.672 ms (typ.), 0.832 ms (max.) (when the LVD is in use)

0.399 ms (typ.), 0.519 ms (max.) (when the LVD is off)

<R> **4.** Reset times in cases of release from an external reset other than the above are listed below.

Release from the reset state for external resets other than the above case:

0.531 ms (typ.), 0.675 ms (max.) (when the LVD is in use)

0.259 ms (typ.), 0.362 ms (max.) (when the LVD is off)

5. After power is supplied, the reset state must be retained until the operating voltage becomes in the range defined in the AC characteristics in **CHAPTER 34** to **CHAPTER 36 ELECTRICAL SPECIFICATIONS**. This is done by controlling the externally input reset signal. After power supply is turned off, this LSI should be placed in the STOP mode, or in the reset state by utilizing the voltage detection circuit or externally input reset signal, before the voltage falls below the operating range. When restarting the operation, make sure that the operation voltage has returned within the range of operation.

Remark V_{POR}: POR power supply rise detection voltage
V_{PDR}: POR power supply fall detection voltage

Figure 25-2. Timing of Generation of Internal Reset Signal by Power-on-reset Circuit and Voltage Detector (2/2)

(2) When LVD is interrupt & reset mode (option byte 000C1/020C1H: LVIMDS1, LVIMDS0 = 1, 0)

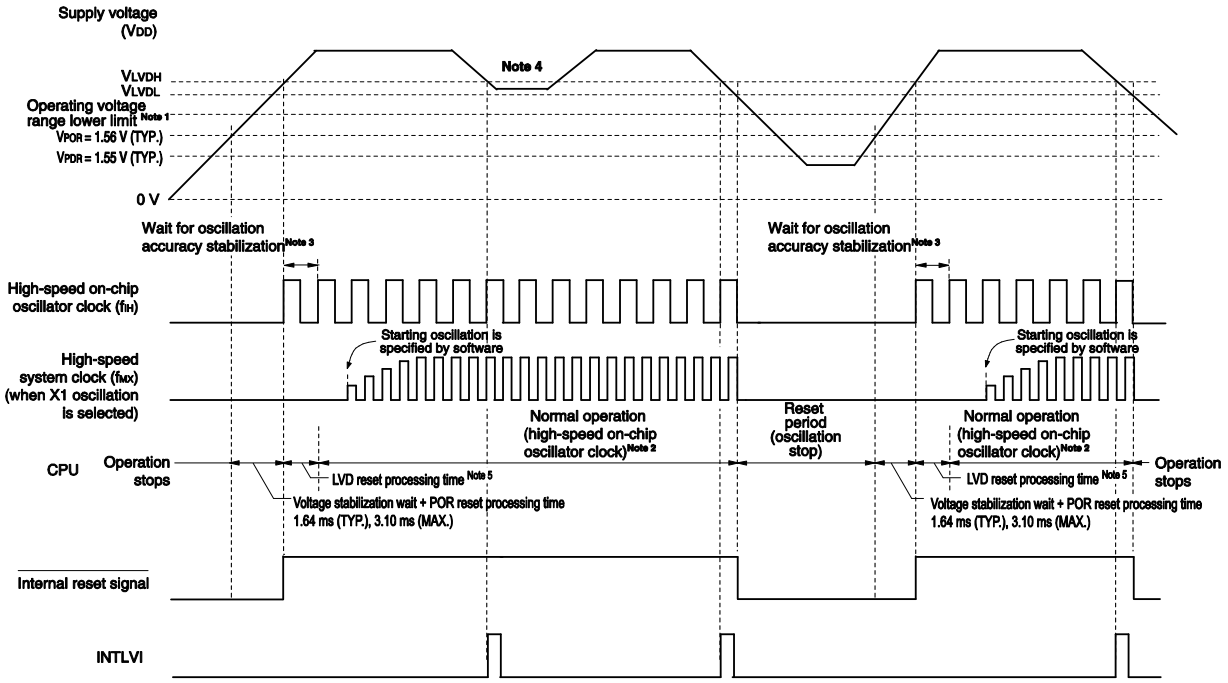

Notes 1. The guaranteed range for operation is 2.7 V ≤ V_{DD} ≤ 5.5 V. Only proceed with normal operations after VDD has reached or exceeded 2.7 V. If an operation may be generated at lower than 2.7V when the supply voltage falls or power-on, use the reset function of the voltage detector, or input the low level to the $\overline{\text{RESET}}$ pin.

2. The high-speed on-chip oscillator clock and a high-speed system clock or subsystem clock can be selected as the CPU clock. To use the X1 clock, use the oscillation stabilization time counter status register (OSTC) to confirm the lapse of the oscillation stabilization time. To use the XT1 clock, use the timer function for confirmation of the lapse of the stabilization time.

3. The internal reset processing time includes the oscillation accuracy stabilization time of the high-speed on-chip oscillator clock.

4. After the first interrupt request signal (INTLVI) is generated, the LVILV and LVIMD bits of the voltage detection level register (LVIS) are automatically set to 1. After INTLVI is generated, appropriate settings should be made according to **Figure 26-8 Initial Setting of Interrupt and Reset Mode**, taking into consideration that the supply voltage might return to V_{LVDH} or higher without falling below V_{LVDL}.

5. LVD reset processing time: 0 to 0.0701 ms (MAX.)

Remark V_{LVDH}, V_{LVDL}: LVD detection voltage
V_{POR}: POR power supply rise detection voltage
V_{PDR}: POR power supply fall detection voltage

25.4 Cautions for Power-on-reset Circuit

In a system where the supply voltage (V_{DD}) fluctuates for a certain period in the vicinity of the POR detection voltage (V_{POR}, V_{PDR}), the system may be repeatedly reset and released from the reset status. In this case, the time from release of reset to the start of the operation of the microcontroller can be arbitrarily set by taking the following action.

<Action>

After releasing the reset signal, wait for the supply voltage fluctuation period of each system by means of a software counter that uses a timer, and then initialize the ports.

Figure 25-3. Example of Software Processing After Reset Release (1/2)

<R> (1) If supply voltage fluctuation is 50 ms or less in vicinity of POR detection voltage

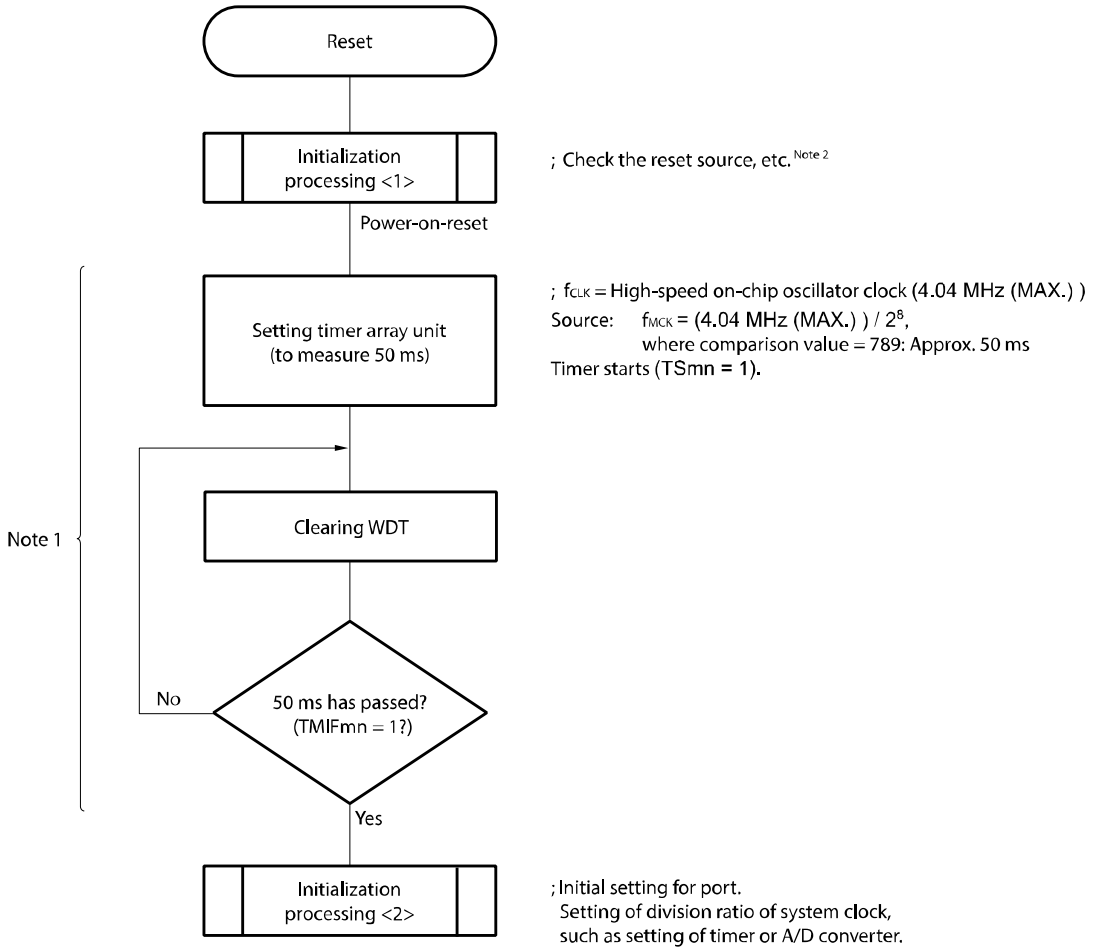

Notes 1. If reset is generated again during this period, initialization processing <2> is not started.

2. A flowchart is shown on the next page.

Remark m = 0, 1, n = 0 to 7

Figure 25-3. Example of Software Processing After Reset Release (2/2)

(2) Checking reset source

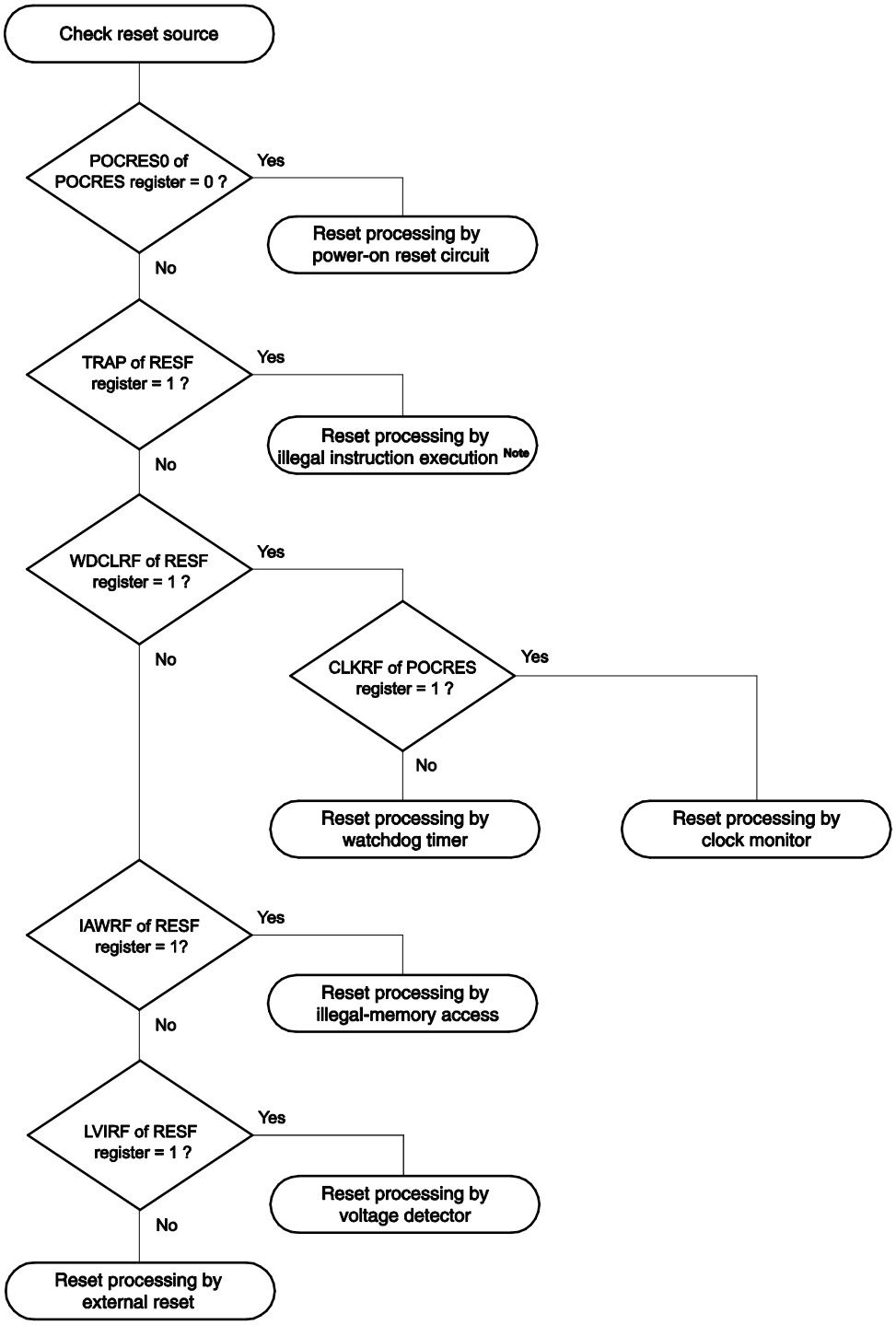

Note The illegal instruction is generated when instruction code FFH is executed.
Reset by the illegal instruction execution not issued by emulation with the in-circuit emulator or on-chip debug emulator.

CHAPTER 26 VOLTAGE DETECTOR

26.1 Functions of Voltage Detector

The voltage detector (LVD) has the following functions.

- The LVD circuit compares the supply voltage (V_{DD}) with the detection voltage (V_{LVDH}, V_{LVDL}), and generates an internal reset or internal interrupt signal.
- <R> The detection level for the power supply detection voltage (V_{LVDH}, V_{LVDL}) can be selected by using the option byte as one of 6 levels (For details, see **CHAPTER 29 OPTION BYTE**).
- Operable in STOP mode.
- The following three operation modes can be selected by using the option byte.

(a) Interrupt & reset mode (option byte LVIMDS1, LVIMDS0 = 1, 0)
For the two detection voltages selected by the option byte 000C1H/020C1H, the high-voltage detection level (V_{LVDH}) is used for generating interrupts and ending resets, and the low-voltage detection level (V_{LVDL}) is used for triggering resets.

(b) Reset mode (option byte LVIMDS1, LVIMDS0 = 1, 1)
The detection voltage (V_{LVD}) selected by the option byte 000C1H/020C1H is used for triggering and ending resets.

(c) Interrupt mode (option byte LVIMDS1, LVIMDS0 = 0, 1)
The detection voltage (V_{LVD}) selected by the option byte 000C1H/020C1H is used for generating interrupts/reset release.

Two detection voltages (V_{LVDH}, V_{LVDL}) can be specified in the interrupt & reset mode, and one (V_{LVD}) can be specified in the reset mode and interrupt mode.

The reset and interrupt signals are generated as follows according to the option byte (LVIMDS0, LVIMDS1) selection.

Interrupt & reset mode (LVIMDS1, LVIMDS0 = 1, 0)	Reset mode (LVIMDS1, LVIMDS0 = 1, 1)	Interrupt mode (LVIMDS1, LVIMDS0 = 0, 1)
Generates an internal interrupt signal when $V_{DD} < V_{LVDH}$, and an internal reset when $V_{DD} < V_{LVDL}$. Releases the reset signal when $V_{DD} \geq V_{LVDH}$.	Generates an internal reset signal when $V_{DD} < V_{LVD}$ and releases the reset signal when $V_{DD} \geq V_{LVD}$.	Generates an internal interrupt signal when V_{DD} drops lower than V_{LVD} ($V_{DD} < V_{LVD}$) or when V_{DD} becomes V_{LVD} or higher ($V_{DD} \geq V_{LVD}$). Releases the reset signal when $V_{DD} \geq V_{LVD}$ at power on.

While the voltage detector is operating, whether the supply voltage is more than or less than the detection level can be checked by reading the voltage detection flag (LVIF: bit 0 of the voltage detection register (LVIM)).

Bit 0 (LVIRF) of the reset control flag register (RESF) is set to 1 if reset occurs. For details of the RESF register, see **CHAPTER 24 RESET FUNCTION**.

26.2 Configuration of Voltage Detector

The block diagram of the voltage detector is shown in Figure 26-1.

<R> **Figure 26-1. Block Diagram of Voltage Detector**

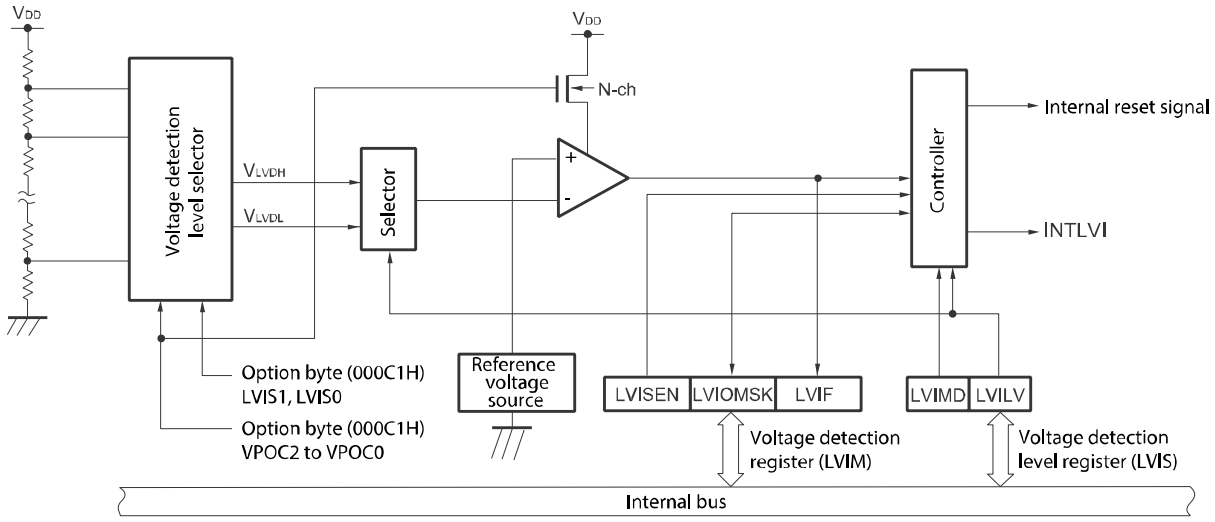

26.3 Registers Controlling Voltage Detector

The voltage detector is controlled by the following registers.

- Voltage detection register (LVIM)
- Voltage detection level register (LVIS)

26.3.1 Voltage detection register (LVIM)

This register is used to specify whether to enable or disable rewriting the voltage detection level register (LVIS), as well as to check the LVD output mask status.

This register can be set by a 1-bit or 8-bit memory manipulation instruction.

Reset signal generation clears this register to 00H [Note 1].

Figure 26-2. Format of Voltage Detection Register (LVIM)

Address: FFFA9H After reset: 00H [Note 1] R/W [Note 2]

Symbol	<7>	6	5	4	3	2	<1>	<0>
LVIM	LVISEN	0	0	0	0	0	LVIOMSK	LVIF

LVISEN	Specification of whether to enable or disable rewriting the voltage detection level register (LVIS)
0	Disabling rewriting
1	Enabling rewriting [Note 3]

LVIOMSK	Mask status flag of LVD output
0	Mask is invalid
1	Mask is valid [Note 4]

LVIF	Voltage detection flag
0	Supply voltage (V_{DD}) ≥ detection voltage (V_{LVD}), or when LVD operation is disabled
1	Supply voltage (V_{DD}) < detection voltage (V_{LVD})

Notes 1. The reset value changes depending on the reset source.
If the LVIS register is reset by LVD, it is not reset but holds the current value.
LVISEN is cleared to 0 by any reset other than one due to LVD.

2. Bits 0 and 1 are read-only.

3. This can only be set when LVIMDS1 and LVIMDS0 are set to 1 and 0 (interrupt and reset mode) by the option byte.

4. LVIOMSK bit is automatically set to 1 in the following periods and reset or interruption by LVD is masked.
- Period during LVISEN = 1
- Waiting period from the time when LVD interrupt is generated until LVD detection voltage becomes stable
- Waiting period from the time when the value of LVILV bit changes until LVD detection voltage becomes stable

26.3.2 Voltage detection level register (LVIS)

This register selects the voltage detection level.

This register can be set by a 1-bit or 8-bit memory manipulation instruction.

Reset signal generation input sets this register to 00H/01H/81H Note1.

Figure 26-3. Format of Voltage Detection Level Register (LVIS)

Address: FFFAAH After reset: 00H/01H/81H Note 1 R/W

Symbol	<7>	6	5	4	3	2	1	<0>
LVIS	LVIMD	0	0	0	0	0	0	LVILV

LVIMD Note 2	Operation mode of voltage detection
0	Interrupt mode
1	Reset mode

LVILV Note 2	LVD detection level
0	High-voltage detection level (V_{LVDH})
1	Low-voltage detection level (V_{LVDL} or V_{LVD})

Notes 1. The reset value changes depending on the reset source and the setting of the option byte.
This register is not cleared (00H) by LVD reset.
The generation of reset signal other than an LVD reset sets as follows.
- When option byte LVIMDS1, LVIMDS0 = 1, 0: 00H
- When option byte LVIMDS1, LVIMDS0 = 1, 1: 81H
- When option byte LVIMDS1, LVIMDS0 = 0, 1: 01H

2. Writing 0 can only be allowed when LVIMDS1 and LVIMDS0 are set to 1 and 0 (interrupt and reset mode) by the option byte. In other cases, writing is not allowed and the value is switched automatically when reset or interrupt is generated.

Cautions 1. Only rewrite the value of the LVIS register after setting the LVISEN bit (bit 7 of the LVIM register) to 1.

2. Specify the LVD operation mode and detection voltage (V_{LVDH}, V_{LVDL}) by using the option byte (000C1H). Table 26-1 shows the option byte (000C1H) settings. For details about the option byte, see **CHAPTER 29 OPTION BYTE**.

Table 26-1. LVD Operation Mode and Detection Voltage Settings for User Option Byte (000C1H/020C1H)

- When used as interrupt & reset mode

<R>

Detection voltage			Option byte Setting Value						
V_{LVDH}		V_{LVDL}	LVIMDS1	LVIMDS0	VPOC2	VPOC1	VPOC0	LVIS1	LVIS0
Rising edge	Falling edge	Falling edge							
4.42 V	4.32 V	2.75 V	1	0	0	0	1	0	0
4.62 V	4.52 V	2.75 V			0	1	0	0	0
3.22 V	3.15 V	2.75 V			0	1	1	0	1
4.74 V	4.64 V							0	0
Other than above			Setting prohibited						

- When used as reset mode

Detection voltage		Option byte Setting Value						
V_{LVD}		LVIMDS1	LVIMDS0	VPOC2	VPOC1	VPOC0	LVIS1	LVIS0
Rising edge	Falling edge							
2.81 V	2.75 V	1	1	0	1	1	1	1
3.02 V	2.96 V			0	0	0	0	1
3.22 V	3.15 V			0	1	1	0	1
4.42 V	4.32 V			0	0	1	0	0
4.62 V	4.52 V			0	1	0	0	0
4.74 V	4.64 V			0	1	1	0	0
Other than above		Setting prohibited						

- When used as interrupt mode

Detection voltage		Option byte Setting Value						
V_{LVD}		LVIMDS1	LVIMDS0	VPOC2	VPOC1	VPOC0	LVIS1	LVIS0
Rising edge	Falling edge							
2.81 V	2.75 V	0	1	0	1	1	1	1
3.02 V	2.96 V			0	0	0	0	1
3.22 V	3.15 V			0	1	1	0	1
4.42 V	4.32 V			0	0	1	0	0
4.62 V	4.52 V			0	1	0	0	0
4.74 V	4.64 V			0	1	1	0	0
Other than above		Setting prohibited						

- When LVDOFF

Detection voltage		Option byte Setting Value						
V_{LVD}		LVIMDS1	LVIMDS0	VPOC2	VPOC1	VPOC0	LVIS1	LVIS0
Rising edge	Falling edge							
–	–	×	1	1	×	×	×	×
Other than above		Setting prohibited						

Caution When the LVD is off, it is necessary to perform an external reset. For an external reset, input a low level of at least 10 μs or more to the $\overline{\text{RESET}}$ pin. To perform an external reset upon power application, input a low level to the $\overline{\text{RESET}}$ pin before power-on, keep the low level for at least 10 μs during the period in which the supply voltage is within the operating range, and then input a high level. After power is applied, do not input a high level to the $\overline{\text{RESET}}$ pin during a period in which the supply voltage is not within the operating range.

Remark ×: don't care

26.4 Operation of Voltage Detector

26.4.1 When used as reset mode

- When starting operation

  Start in the following initial setting state.

  Specify the operation mode (the reset mode (LVIMDS1, LVIMDS0 = 1, 1)) and the detection voltage (V_{LVD}) by using the option byte 000C1H/020C1H.

  - Set bit 7 (LVISEN) of the voltage detection register (LVIM) to 0 (disable rewriting of voltage detection level register (LVIS))
  - When the option byte LVIMDS1 and LVIMDS0 are set to 1, the initial value of the LVIS register is set to 81H.
    Bit 7 (LVIMD) is 1 (reset mode).
    Bit 0 (LVILV) is 1 (low-voltage detection level: V_{LVD}).

  Figure 26-4 shows the timing of the internal reset signal generated by the voltage detector.

Figure 26-4. Timing of Voltage Detector Internal Reset Signal Generation
(Option Byte LVIMDS1, LVIMDS0 = 1, 1)

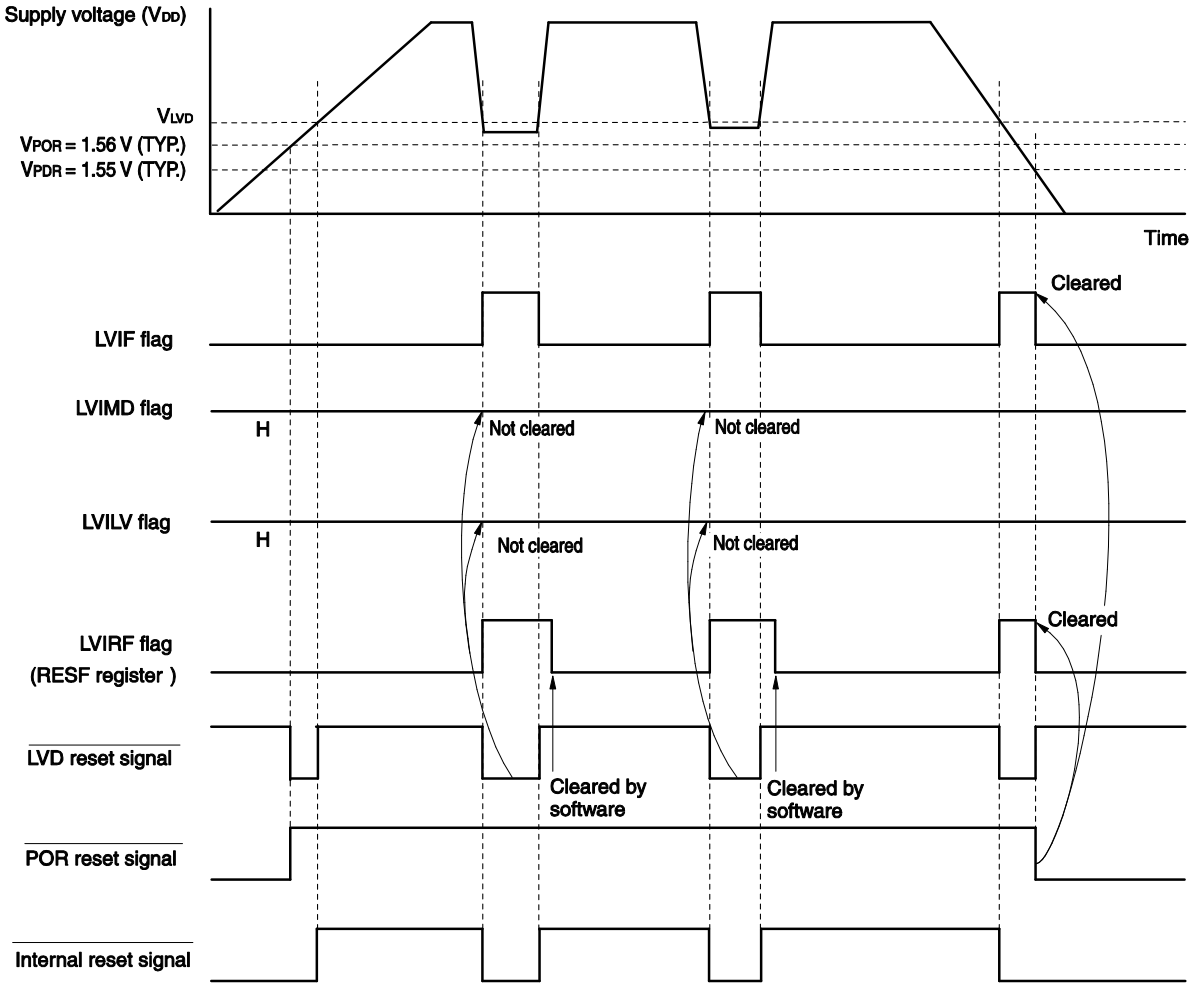

Remark V_{POR}: POR power supply rise detection voltage
V_{PDR}: POR power supply fall detection voltage

26.4.2 When used as interrupt mode

- When starting operation

  Specify the operation mode (the interrupt mode (LVIMDS1, LVIMDS0 = 0, 1)) and the detection voltage (V_{LVD}) by using the option byte 000C1H/020C1H.

  Do not input a high level to the $\overline{\text{RESET}}$ pin when the supply voltage is not within the operating voltage range.

  Start in the following initial setting state.

  - Set bit 7 (LVISEN) of the voltage detection register (LVIM) to 0 (disable rewriting of voltage detection level register (LVIS))
  - When the option byte LVIMDS1 is clear to 0 and LVIMDS0 is set to 1, the initial value of the LVIS register is set to 01H.

    Bit 7 (LVIMD) is 0 (interrupt mode).

    Bit 0 (LVILV) is 1 (low-voltage detection level: V_{LVDL}).

  Figure 26-5 shows the timing of the internal interrupt signal generated by the voltage detector.

Figure 26-5. Timing of Voltage Detector Internal Interrupt Signal Generation (Option Byte LVIMDS1, LVIMDS0 = 0, 1)

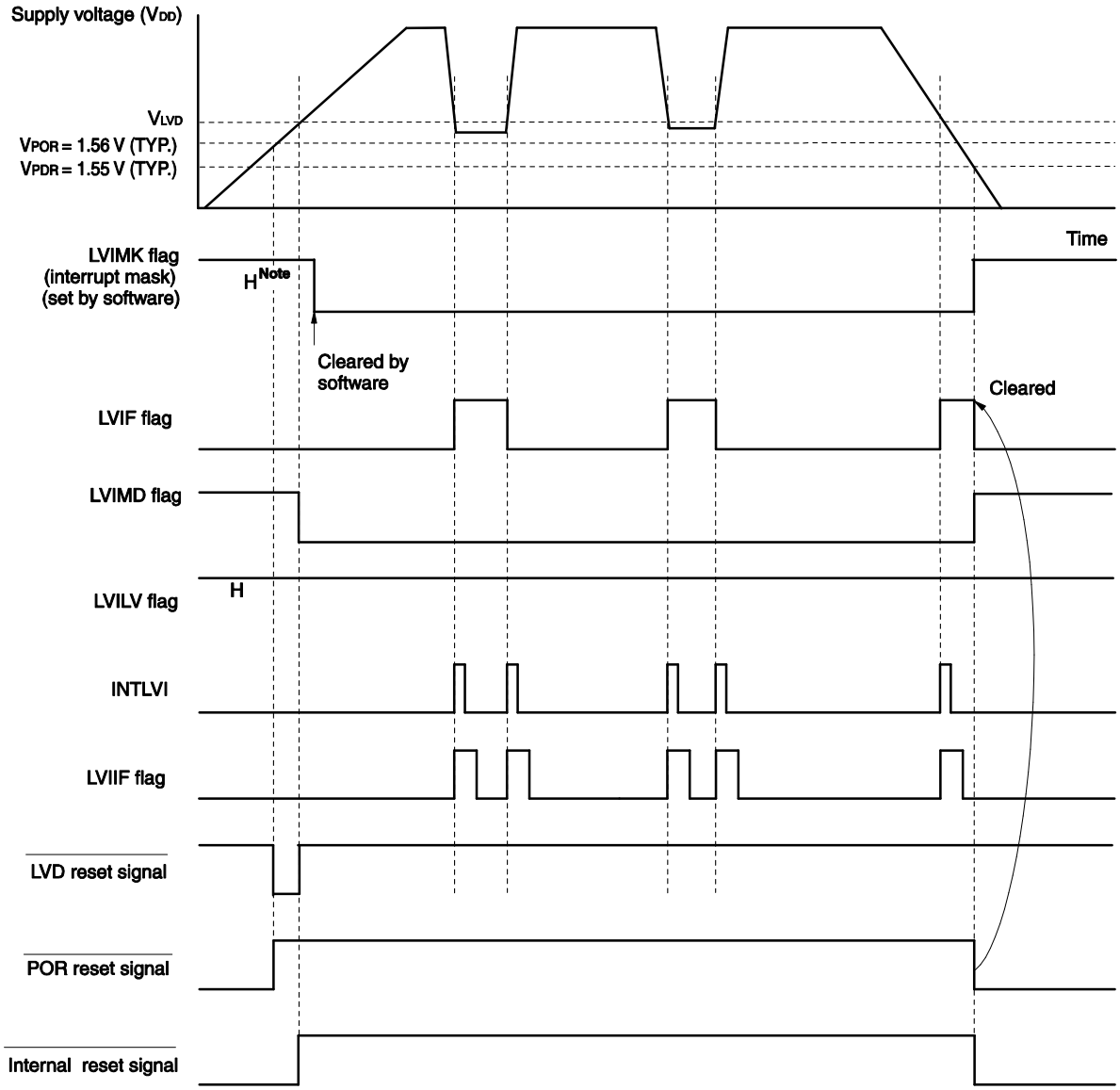

Note The LVIMK flag is set to 1 by reset signal generation.

Remark V_{POR}: POR power supply rise detection voltage
V_{PDR}: POR power supply fall detection voltage

26.4.3 When used as interrupt and reset mode

- When starting operation

  Specify the operation mode (the interrupt and reset (LVIMDS1, LVIMDS0 = 1, 0)) and the detection voltage (V_{LVDH}, V_{LVDL}) by using the option byte 000C1H/020C1H.

  Start in the following initial setting state.

  - Set bit 7 (LVISEN) of the voltage detection register (LVIM) to 0 (disable rewriting of voltage detection level register (LVIS))
  - When the option byte LVIMDS1 is set to 1 and LVIMDS0 is clear to 0, the initial value of the LVIS register is set to 00H.
    Bit 7 (LVIMD) is 0 (interrupt mode).
    Bit 0 (LVILV) is 0 (high-voltage detection level: V_{LVDH}).

  Figures 26-6 shows the Timing of Voltage Detector Reset Signal and Interrupt Signal Generation.
  Perform the processing according to **Figure 26-7 Processing Procedure After an Interrupt Is Generated** and **Figure 26-8 Initial Setting of Interrupt and Reset Mode**.

Figure 26-6. Timing of Voltage Detector Reset Signal and Interrupt Signal Generation (Option Byte LVIMDS1, LVIMDS0 = 1, 0) (1/2)

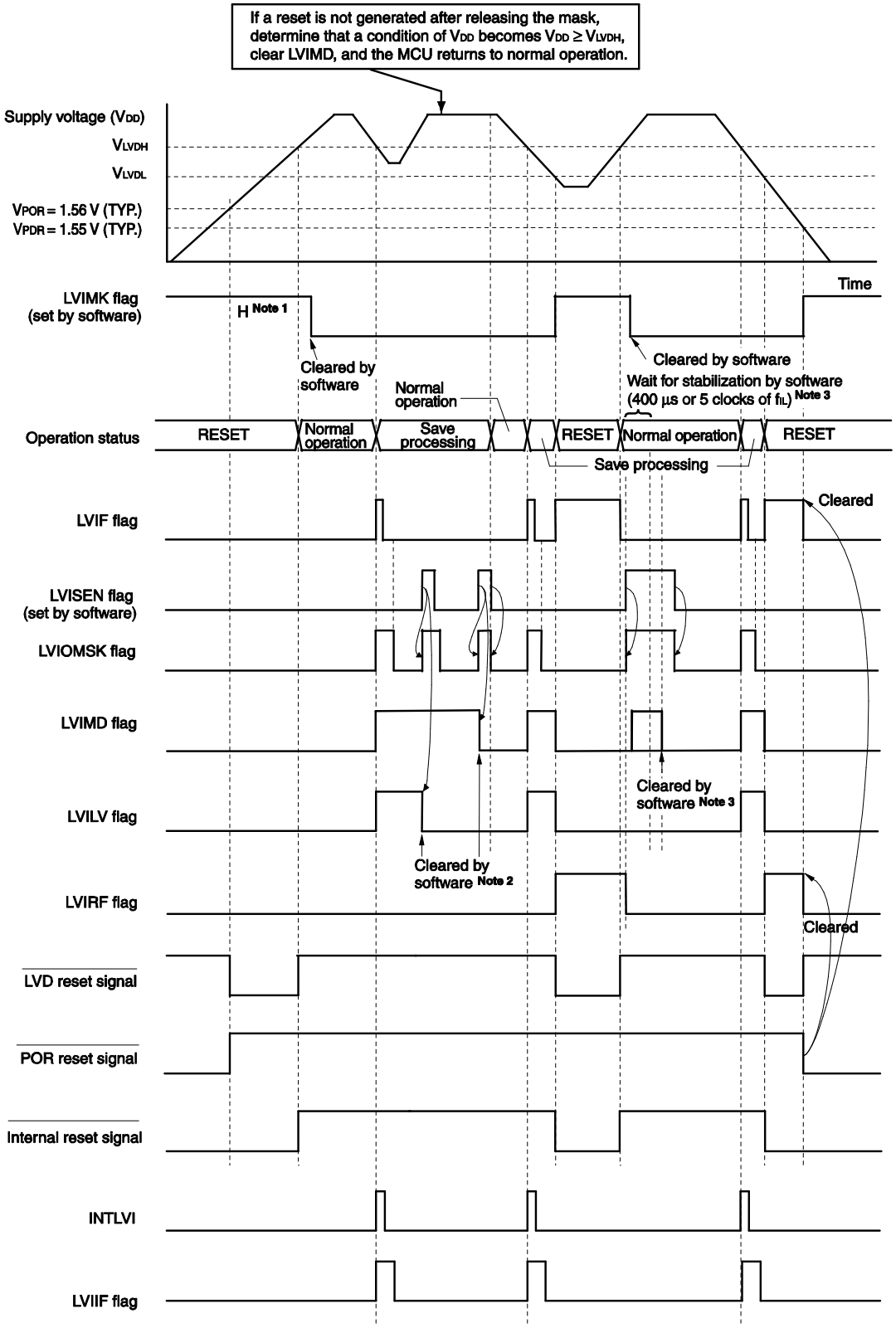

(**Notes** and **Remark** are listed on the next page.)

Notes 1. The LVIMK flag is set to 1 by reset signal generation.

2. After an interrupt is generated, perform the processing according to **Figure 26-7 Processing Procedure After an Interrupt Is Generated** in interrupt and reset mode.

3. After a reset is released, perform the processing according to **Figure 26-8 Initial Setting of Interrupt and Reset Mode** in interrupt and reset mode.

Remark V_{POR}: POR power supply rise detection voltage

V_{PDR}: POR power supply fall detection voltage

Figure 26-6. Timing of Voltage Detector Reset Signal and Interrupt Signal Generation (Option Byte LVIMDS1, LVIMDS0 = 1, 0) (2/2)

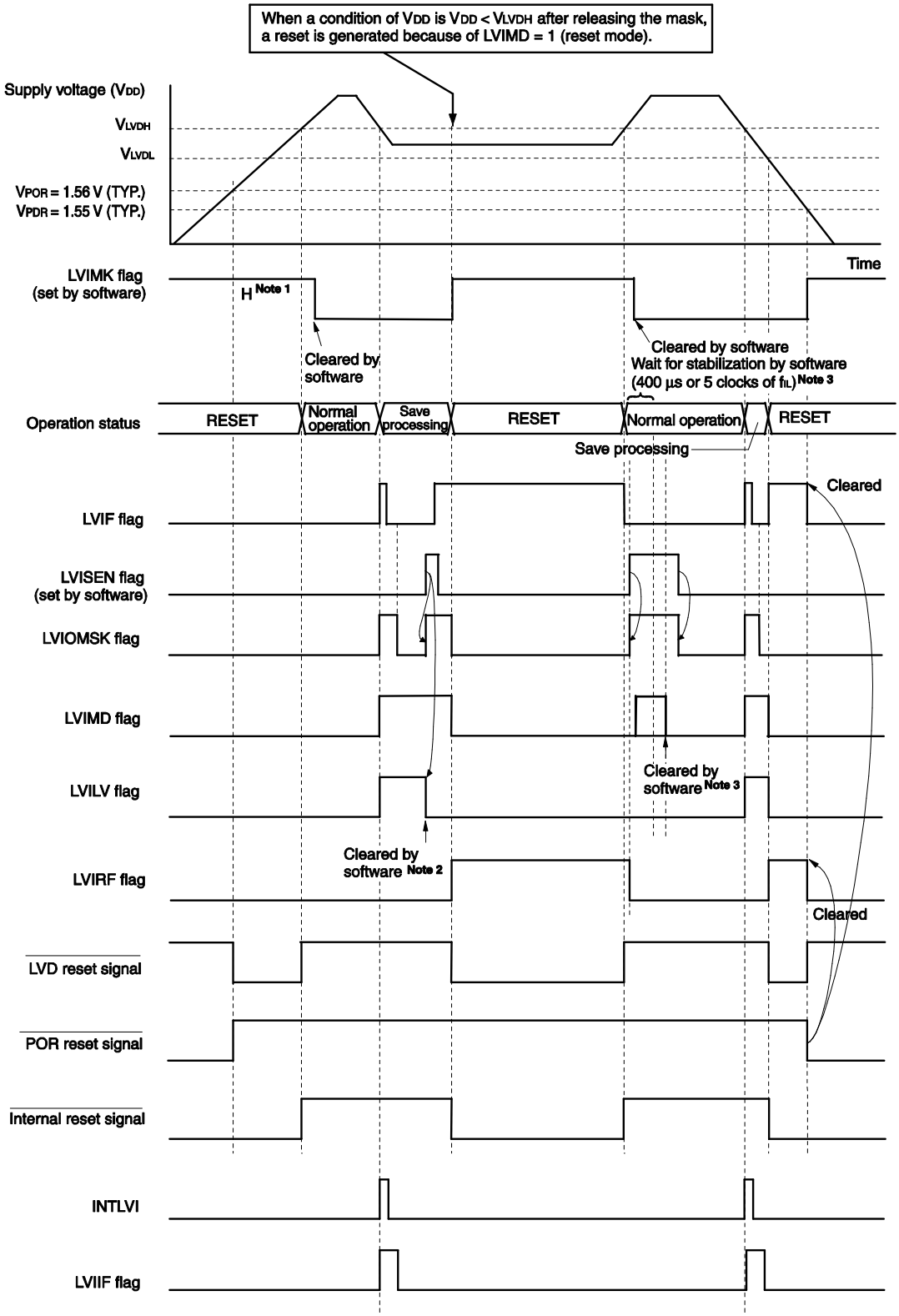

(**Notes** and **Remark** are listed on the next page.)

Notes 1. The LVIMK flag is set to 1 by reset signal generation.

2. After an interrupt is generated, perform the processing according to **Figure 26-7 Processing Procedure After an Interrupt Is Generated** in interrupt and reset mode.

3. After a reset is released, perform the processing according to **Figure 26-8 Initial Setting of Interrupt and Reset Mode** in interrupt and reset mode.

Remark V_{POR}: POR power supply rise detection voltage
V_{PDR}: POR power supply fall detection voltage

Figure 26-7. Processing Procedure After an Interrupt Is Generated

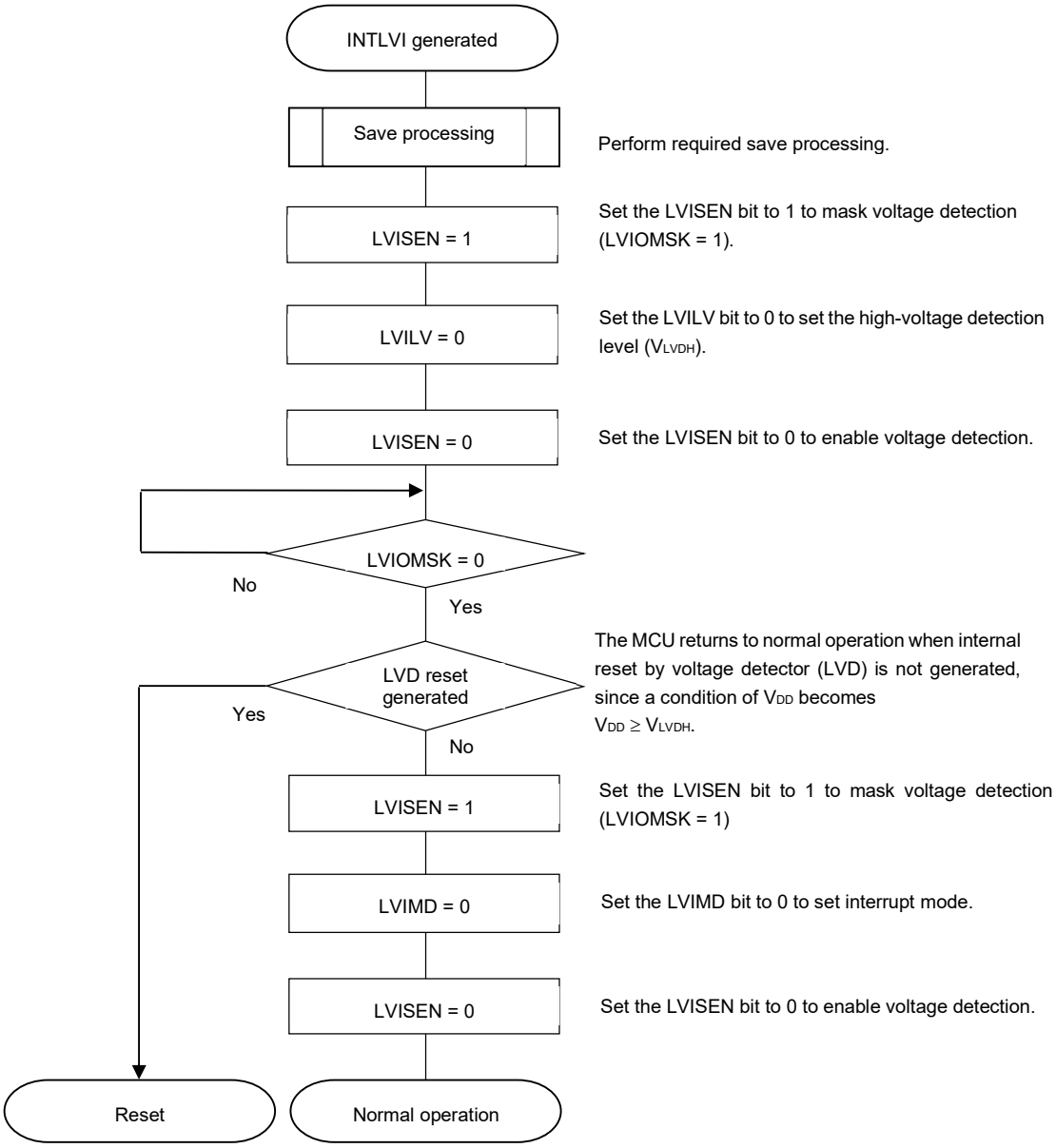

When setting an interrupt and reset mode (LVIMDS1, LVIMDS0 = 1, 0), voltage detection stabilization wait time for 400 μs or 5 clocks of f_{IL} is necessary after LVD reset is released (LVIRF = 1). After waiting until voltage detection stabilizes, (0) clear the LVIMD bit for initialization. While voltage detection stabilization wait time is being counted and when the LVIMD bit is rewritten, set LVISEN to 1 to mask a reset or interrupt generation by LVD.

Figure 26-8 shows the procedure for initial setting of interrupt and reset mode.

Figure 26-8. Initial Setting of Interrupt and Reset Mode

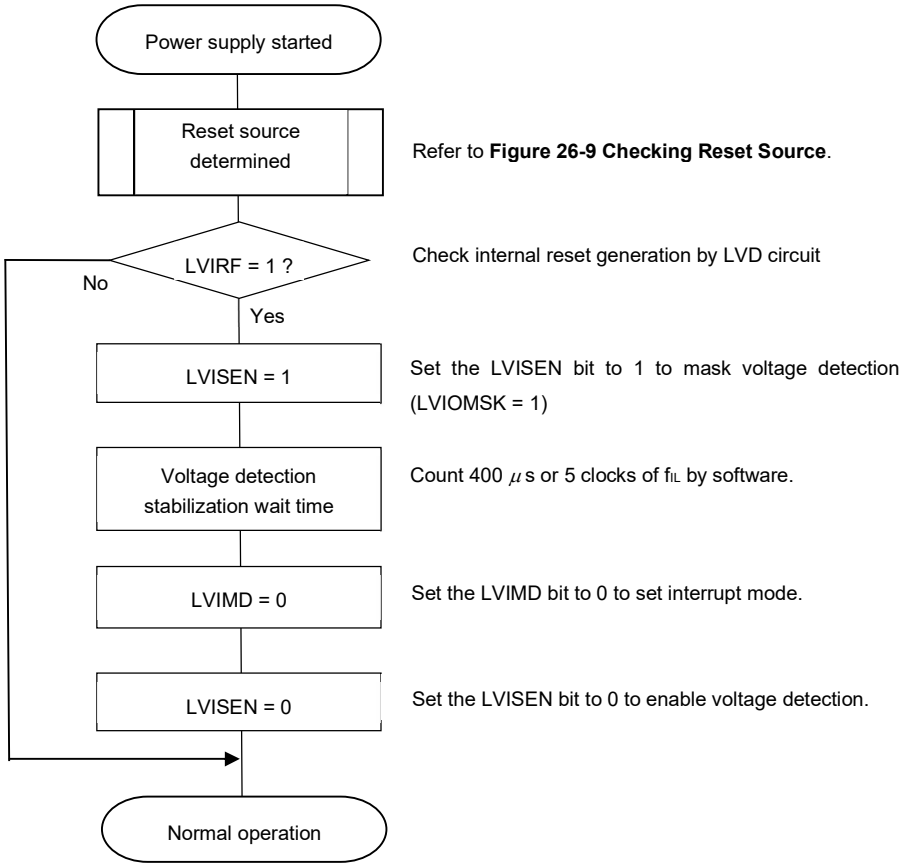

Remark f_{IL}: Low-speed on-chip oscillator clock frequency

26.5 Cautions for Voltage Detector

26.5.1 Checking reset source

When a reset occurs, check the reset source by using the following method.

Figure 26-9. Checking Reset Source

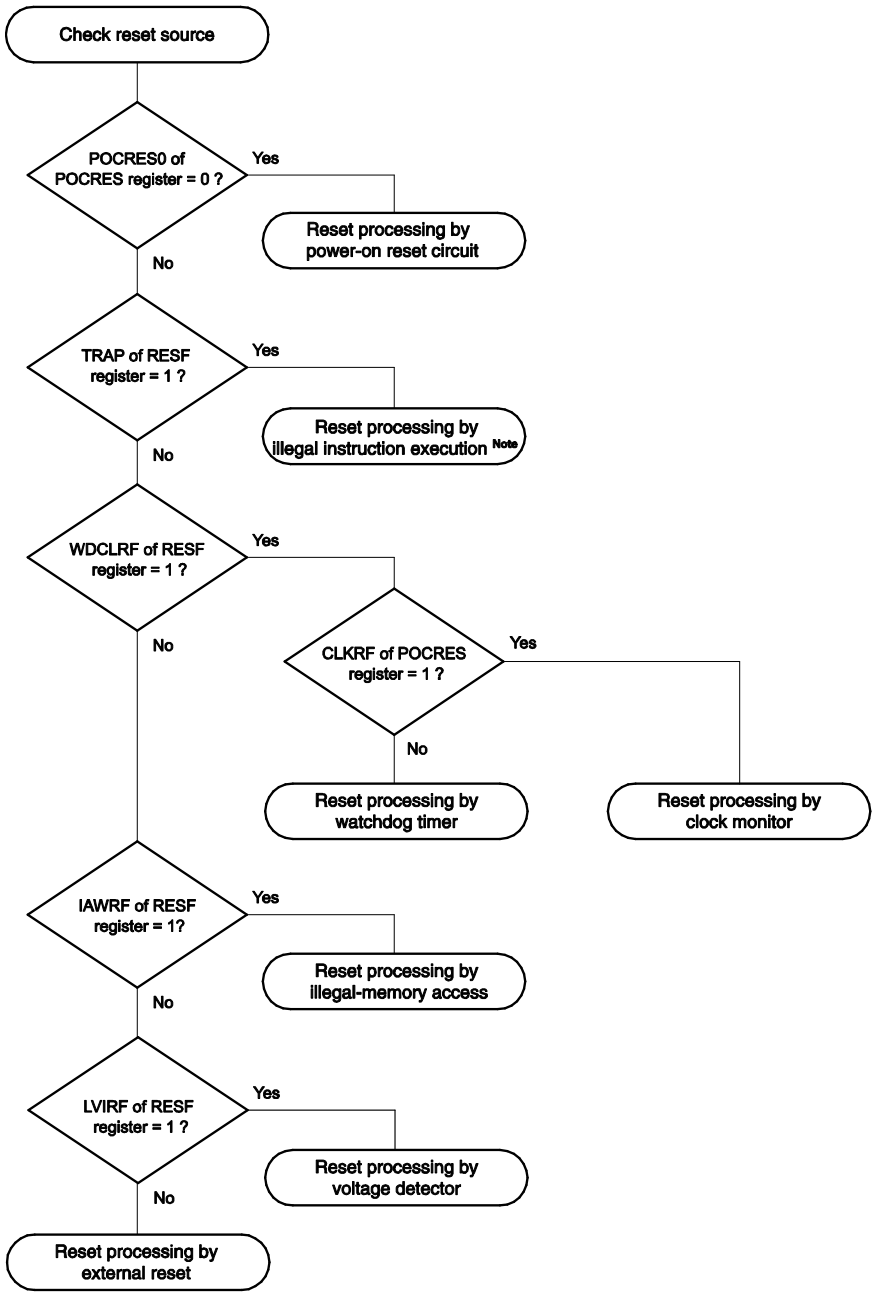

Note When instruction code FFH is executed.
Reset by the illegal instruction execution not issued by emulation with the in-circuit emulator or on-chip debug emulator.

26.5.2 Delay from the time LVD reset source is generated until the time LVD reset has been generated or released

There is some delay from the time supply voltage (V_{DD}) < LVD detection voltage (V_{LVD}) until the time LVD reset has been generated.

In the same way, there is also some delay from the time LVD detection voltage (V_{LVD}) ≤ supply voltage (V_{DD}) until the time LVD reset has been released (see **Figure 26-10**).

Figure 26-10. Delay from The Time LVD Reset Source Is Generated until The Time LVD Reset Has Been Generated or Released

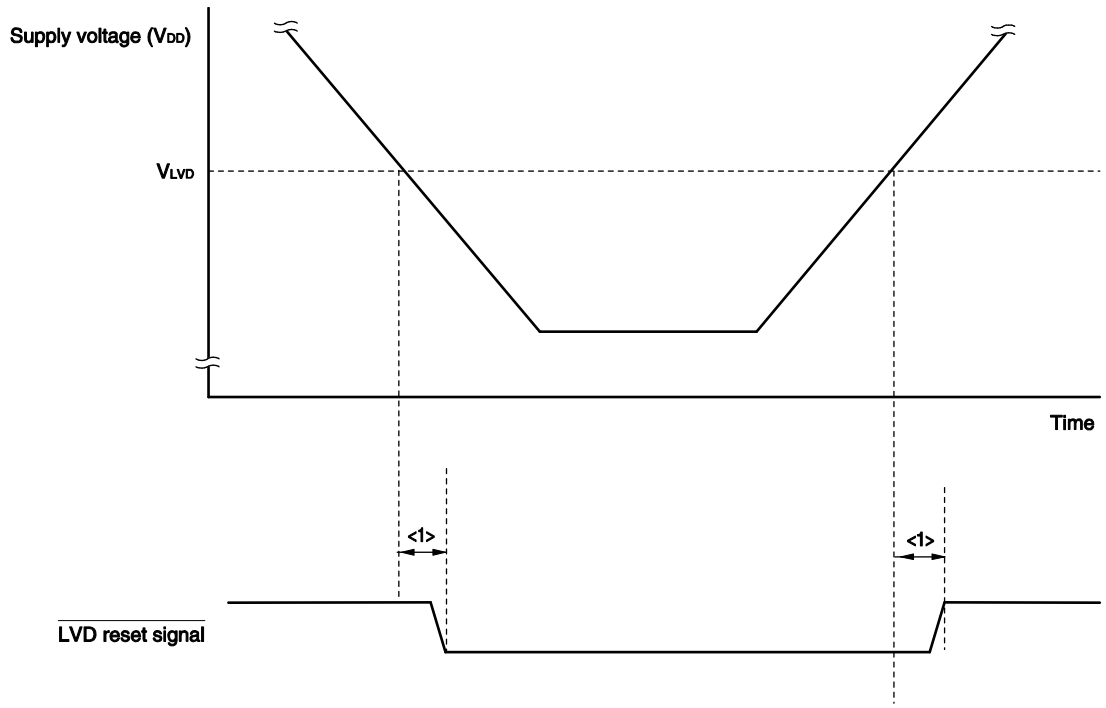

<1>: Detection delay (300 μs (MAX.))

CHAPTER 27 SAFETY FUNCTIONS

27.1 Overview of Safety Functions

The following safety functions are provided in the RL78/F13 and RL78/F14 to comply with the IEC60730 and IEC61508 safety standards.

These functions enable the microcontroller to self-diagnose abnormalities and stop operating if an abnormality is detected.

(1) Flash memory CRC operation function (high-speed CRC, general-purpose CRC)

This detects data errors in the flash memory by performing CRC operations.

Two CRC functions are provided in the RL78/F13 and RL78/F14 that can be used according to the application or purpose of use.

- High-speed CRC: The CPU can be stopped and a high-speed check executed on its entire code flash memory area during the initialization routine.
- General CRC: This can be used for checking various data in addition to the code flash memory area while the CPU is running.

(2) RAM-ECC function

2-bit error detection and 1- bit error correction are available.

(3) CPU stack pointer monitor function

This detects underflows and overflows of the stack pointer.

(4) Clock monitoring function

The system clock (f_{MAIN}) and main/PLL select clock (f_{MP}) are monitored to detect oscillation stopping.

(5) RAM guard function

This prevents RAM data from being rewritten when the CPU freezes.

(6) SFR guard function

This prevents SFRs from being rewritten when the CPU freezes.

(7) Invalid memory access detection function

This detects illegal accesses to invalid memory areas (such as areas where no memory is allocated and areas to which access is restricted).

(8) Frequency detection function

This uses TAU to detect the oscillation frequency.

(9) A/D test function

This is used to perform a self-check of A/D conversion by performing A/D conversion on the internal reference voltage.

(10) Digital output signal level detection function for I/O ports

When the I/O ports are output mode in which PMm bit of the port mode register (PMm) is 0, the output level of the pin can be read.

Remarks 1. m = 0, 1, 3 to 10, 12 to 15, n = 0 to 7

2. For details on usage, see Application Note (under creation).

27.2 Registers Used by Safety Functions

The safety functions use the following registers:

Register	Each Function of Safety Function
• Flash memory CRC control register (CRC0CTL) • Flash memory CRC operation result register (PGCRCL)	Flash memory CRC operation function (high-speed CRC)
• CRC input register (CRCIN) • CRC operation mode control register (CRCMD) • CRC data register (CRCD)	CRC operation function (general-purpose CRC)
• Error address store register (ERADR) • 1-bit error detection interrupt enable register (ECCIER) • Bit error detection register (ECCER) • ECC test protect register (ECCTPR) • ECC test mode register (ECCTMDR) • Write data inversion register (ECCDWRVR)	RAM-ECC function
• SPM control register (SPMCTRL) • SP overflow address setting register (SPOFR) • SP underflow setting register (SPUFR)	Stack pointer monitor function
• Invalid memory access detection control register (IAWCTL)	RAM guard function
	SFR guard function
	Invalid memory access detection function
• Timer input select register 0 (TIS0) • System clock control register (CKC)	Frequency detection function
• A/D test register (ADTES) • Analog input channel specification register (ADS)	A/D test function
• Port mode select register (PMS)	Digital output signal level detection function for I/O ports

The content of each register is described in **27.3 Operation of Safety Functions**.

27.3 Operation of Safety Functions

27.3.1 Flash memory CRC operation function (high-speed CRC)

The IEC60730 standard mandates the checking of data in the flash memory, and recommends using CRC to do it. The high-speed CRC provided in the RL78/F13 and RL78/F14 can be used to check the entire code flash memory area during the initialization routine. The high-speed CRC can be executed only when the program is allocated on the RAM and in the HALT mode of the main system clock.

High-speed CRC operations are performed by stopping the CPU and reading 32 bits of data from the flash memory in one clock cycle. The feature of this operation is the short time it takes until the end of the check (for example, 64 Kbytes of flash memory are checked in 512 μs when the operating clock is at 32 MHz).

The CRC generator polynomial used complies with "$X^{16} + X^{12} + X^{5} + 1$" of CRC-16-CCITT.

The high-speed CRC operates in MSB first order from bit 31 to bit 0.

Caution **The result of the CRC operation will differ from that in on-chip debugging because of allocation of the monitor program.**

Remark The operation result is different between the high-speed CRC and the general CRC, because the general CRC operates in LSB first order.

<Control register>

(1) Flash memory CRC control register (CRC0CTL)

This register is used to control the operation of the high-speed CRC ALU, as well as to specify the operation range.

The CRC0CTL register can be set by a 1-bit or 8-bit memory manipulation instruction.

Reset signal generation clears this register to 00H.

Figure 27-1. Format of Flash Memory CRC Control Register (CRC0CTL)

Address: F02F0H After reset: 00H R/W

Symbol	<7>	6	5	4	3	2	1	0
CRC0CTL	CRC0EN	0	FEA5	FEA4	FEA3	FEA2	FEA1	FEA0

CRC0EN	Control of high-speed CRC ALU operation
0	Stop the operation.
1	Start the operation according to HALT instruction execution.

FEA5	FEA4	FEA3	FEA2	FEA1	FEA0	High-speed CRC operation range
0	0	0	0	0	0	00000H to 3FFBH (16 Kbytes - 4 bytes)
0	0	0	0	0	1	00000H to 7FFBH (32 Kbytes - 4 bytes)
0	0	0	0	1	0	00000H to BFFBH (48 Kbytes - 4 bytes)
0	0	0	0	1	1	00000H to FFFBH (64 Kbytes - 4 bytes)
0	0	0	1	0	0	00000H to 13FFBH (80 Kbytes - 4 bytes)
0	0	0	1	0	1	00000H to 17FFBH (96 Kbytes - 4 bytes)
0	0	0	1	1	0	00000H to 1BFFBH (112 Kbytes - 4 bytes)
0	0	0	1	1	1	00000H to 1FFFBH (128 Kbytes - 4 bytes)
0	0	1	0	0	0	00000H to 23FFBH (144 Kbytes - 4 bytes)
0	0	1	0	0	1	00000H to 27FFBH (160 Kbytes - 4 bytes)
0	0	1	0	1	0	00000H to 2BFFBH (176 Kbytes - 4 bytes)
0	0	1	0	1	1	00000H to 2FFFBH (192 Kbytes - 4 bytes)
0	0	1	1	0	0	00000H to 33FFBH (208 Kbytes - 4 bytes)
0	0	1	1	0	1	00000H to 37FFBH (224 Kbytes - 4 bytes)
0	0	1	1	1	0	00000H to 3BFFBH (240 Kbytes - 4 bytes)
0	0	1	1	1	1	00000H to 3FFFBH (256 Kbytes - 4 bytes)
Other than the above						Setting prohibited

Remark Input the expected CRC operation result value to be used for comparison in the lowest 4 bytes of the flash memory. Note that the operation range will thereby be reduced by 4 bytes.
The lowest 4 bytes of 16 Kbytes are used to store the expected value, so operation is not performed on these bytes.

(2) Flash memory CRC operation result register (PGCRCL)

This register is used to store the high-speed CRC operation results.

The PGCRCL register can be set by a 16-bit memory manipulation instruction.

Reset signal generation clears this register to 0000H.

Figure 27-2. Format of Flash Memory CRC Operation Result Register (PGCRCL)

Address: F02F2H After reset: 0000H R/W

Symbol	15	14	13	12	11	10	9	8
PGCRCL	PGCRC15	PGCRC14	PGCRC13	PGCRC12	PGCRC11	PGCRC10	PGCRC9	PGCRC8
	7	6	5	4	3	2	1	0
	PGCRC7	PGCRC6	PGCRC5	PGCRC4	PGCRC3	PGCRC2	PGCRC1	PGCRC0

PGCRC15 to PGCRC0	High-speed CRC operation results
0000H to FFFFH	Store the high-speed CRC operation results.

Caution The PGCRCL register can only be written if CRC0EN (bit 7 of the CRC0CTL register) = 1.

Figure 27-3 shows the flowchart of flash memory CRC operation function (high-speed CRC).

<Operation flow>

Figure 27-3. Flowchart of Flash Memory CRC Operation Function (High-speed CRC)

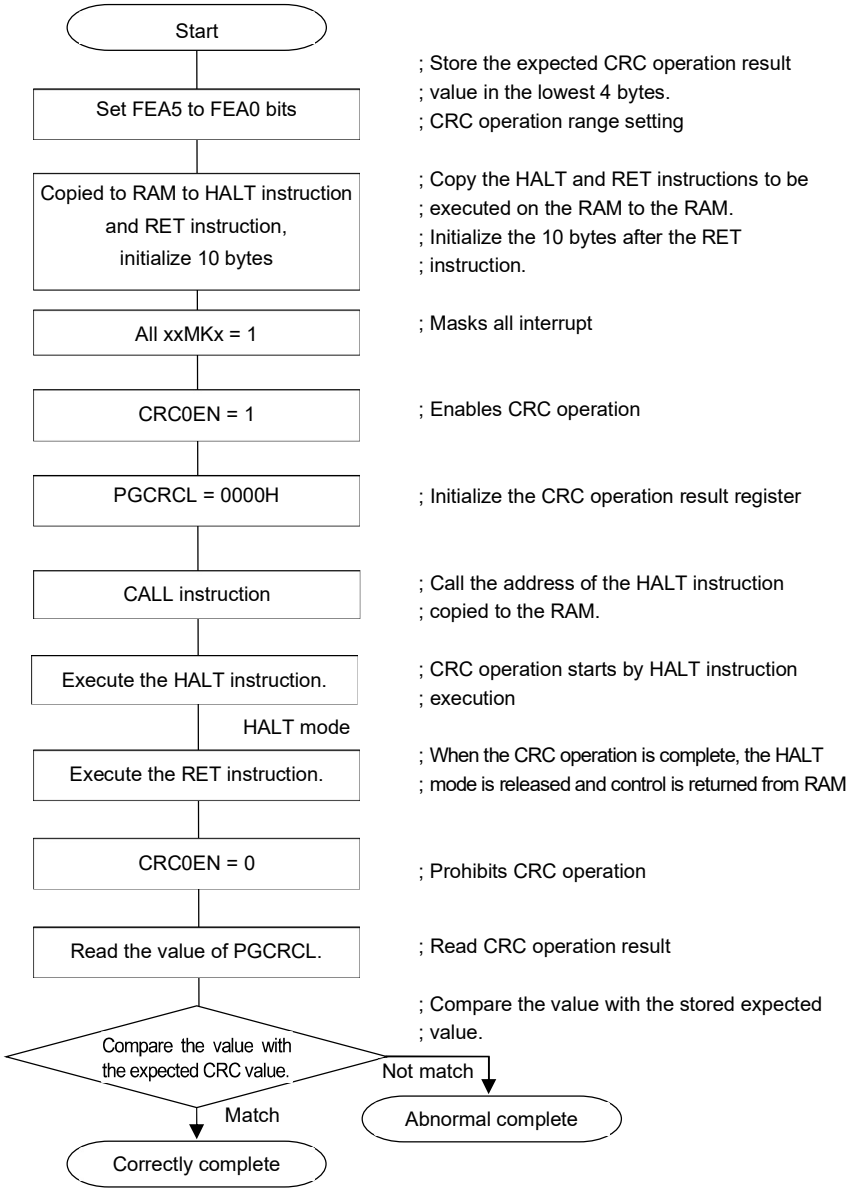

Cautions 1. The CRC operation is executed only on the code flash.

2. Store the expected CRC operation value in the area below the operation range in the code flash.

3. Boot swapping is not performed while the CRC operation is being executed.

4. The CRC operation is enabled by executing the HALT instruction in the RAM area.
Be sure to execute the HALT instruction in RAM area.

The expected CRC value can be calculated by using tools such as the CubeSuite+ development environment (see the CubeSuite+ user's manual for details).

27.3.2 CRC operation function (general-purpose CRC)

In order to guarantee safety during operation, the IEC61508 standard mandates the checking of data even while the CPU is operating.

In the RL78/F13 and RL78/F14, a general CRC operation can be executed as a peripheral function while the CPU is operating. The general CRC can be used for checking various data in addition to the code flash memory area. The data to be checked can be specified by using software (a user-created program). In HALT mode, CRC operations can only proceed during DTC transfer.

The general CRC operation can be executed in the main system clock operation mode as well as the subsystem clock operation mode.

The CRC generator polynomial used is “$X^{16} + X^{12} + X^5 + 1$” of CRC-16-CCITT. The data to be input is inverted in bit order and then calculated to allow for LSB-first communication. For example, if the data 12345678H is sent from the LSB, values are written to the CRCIN register in the order of 78H, 56H, 34H, and 12H, enabling a value of 08F6H to be obtained from the CRCD register. This is the result obtained by executing a CRC operation on the bit rows shown below, which consist of the data 12345678H inverted in bit order.

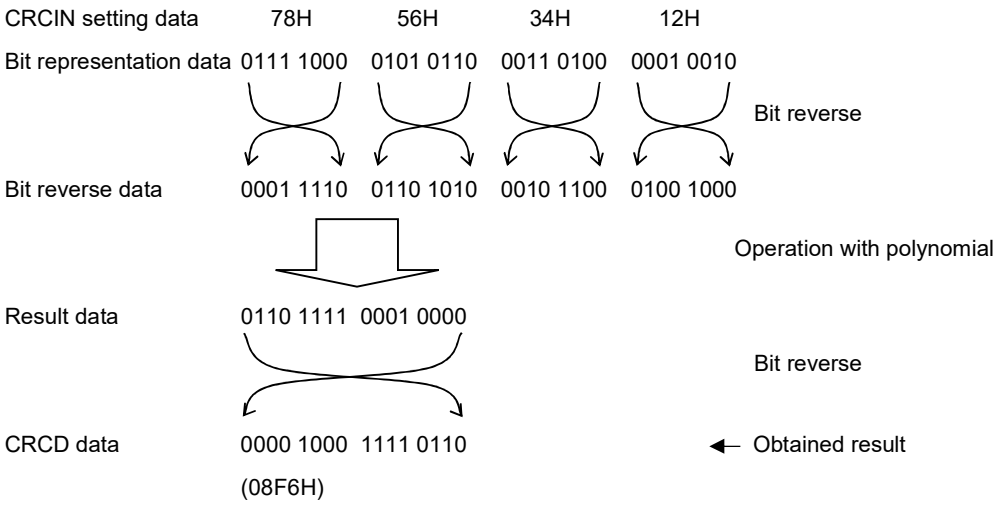

Caution Setting a software break in a target area of CRC operation alters the result of the CRC operation because the debugger changes the row where the software break is to be set into a break instruction during program execution.

<Control register>

(1) CRC input register (CRCIN)

CRCIN register is an 8-bit register that is used to set the CRC operation data of general-purpose CRC.
The possible setting range is 00H to FFH.
The CRCIN register can be set by an 8-bit memory manipulation instruction.
Reset signal generation clears this register to 00H.

Figure 27-4. Format of CRC Input Register (CRCIN)

Address: FFFACH After reset: 00H R/W

Symbol	7	6	5	4	3	2	1	0
CRCIN								

CRCIN7 to CRCIN0	Setting the CRC operation data of general-purpose CRC
00H to FFH	Data input when supporting CRC-CCITT
00H to 0FH	Data input when conforming to SENT Note

Note For CRCIN register write when conforming to SENT, write valid data to the lower 4 bits (bits 3 to 0) and write 0 to the other bits (if any value other than 0 is written to, the written value is read because the bits other than the lower 4 bits are not processed).

(2) CRC operation mode control register (CRCMD)

CRCMD register is used to select the general-purpose CRC operation mode.
The CRCMD register can be set by an 8-bit memory manipulation instruction.

Figure 27-5. Format of CRC Operation Mode Control Register (CRCMD)

Address: F02F9H After reset: 00H R/W

Symbol	7	6	5	4	3	2	1	0
CRCMD	-	-	-	-	-	-	-	POLYSEL

POLYSEL	CRC code generation circuit select bit
0	CRC-CCITT ($X^{16} + X^{12} + X^5 + 1$)
1	Conform to SENT ($X^4 + X^3 + X^2 + 1$)

Cautions 1. To generate CRC code conforming to SENT, set the POLYSEL bit in the CRCMD register.
2. Bits 7 to 1 are always read as 0. The write value should always be 0.

(3) CRC data register (CRCD)

This register is used to store the general-purpose CRC operation result.

The possible setting range is 0000H to FFFFH.

After 1 clock of CPU/peripheral hardware clock (f_{CLK}) has elapsed from the time CRCIN register is written, the CRC operation result is stored to the CRCD register.

The CRCD register can be set by a 16-bit memory manipulation instruction.

Reset signal generation clears this register to 0000H.

Figure 27-6. Format of CRC Data Register (CRCD)

Address: F02FAH After reset: 0000H R/W

Symbol	15	14	13	12	11	10	9	8	7	6	5	4	3	2	1	0
CRCD																

CRCD15 to CRCD0	Store the general-purpose CRC operation result Note 1, 2
0000H to FFFFH	CRC operation result when supporting CRC-CCITT
0000H to 000FH	CRC operation result when conforming to SENT Note3

Notes 1. Read the value written to CRCD register before writing to CRCIN register.

2. If writing and storing operation result to CRCD register conflict, the writing is ignored.

3. For CRCD register write when conforming to SENT, write valid data to the lower 4 bits (bits 3 to 0) and write 0 to the other bits.

<Operation flow>

Figure 27-7. CRC Operation Function (General-Purpose CRC)

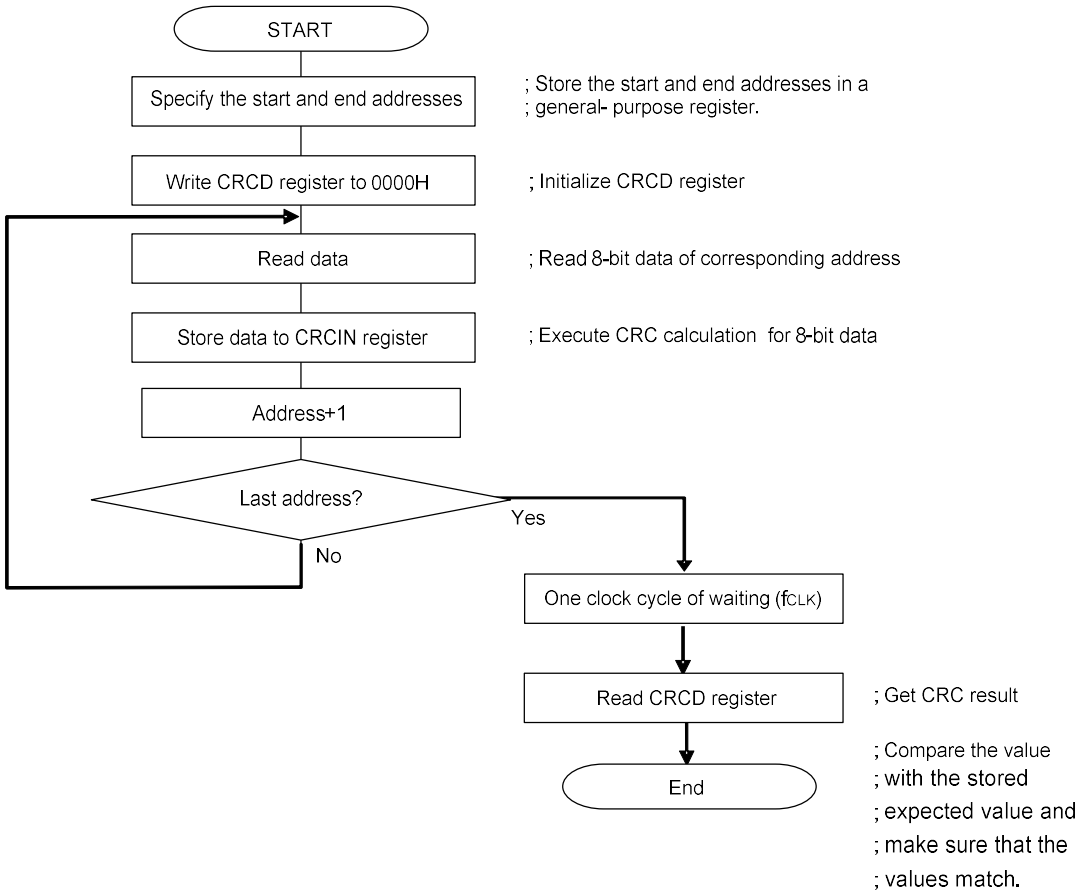

27.3.3 RAM-ECC function

The RL78/F13 and RL78/F14 have the RAM-ECC function. This function is used to detect erroneous data (bit errors), generate interrupt requests, and retain the addresses of bit errors. If only one bit is in error, the data are corrected.

Caution The RAM-ECC function is disabled during on-chip debugging. Therefore, do not use the ECC test mode to check the on-chip debugging operation. Even if the ECC test mode is used, bit errors are not detected, error addresses are not stored, or an interrupt is not generated. In addition, even if the bit error is 1 bit, the data is not corrected.

<Control register>

Register Name	Description	Access Size
ERADR	Error address store register	16 bits
ECCIER	1-bit error detection interrupt enable register	8 bits
ECCER	Bit error detection register	8 bits
ECCTPR	ECC test protect register	8 bits
ECCTMDR	ECC test mode register	8 bits
ECCDWRVR	Write data inversion register	16 bits

(1) Error address store register (ERADR)

Figure 27-8. Format of Error Address Store Register (ERADR)

<R> Address: F0200H After reset: 0000H R/W

Symbol	15	14	13	12	11	10	9	8	7	6	5	4	3	2	1	0
ERADR	ERAD															

ERAD	Bit error address
0000H to FFFFH	Address when a bit error interrupt request is generated

<R> **Cautions 1. Set the ERADR register by a 16-bit memory manipulation instruction.**
2. The register value is updated each time a bit error interrupt request is generated.

(2) 1-bit error detection interrupt enable register (ECCIER)

Figure 27-9. Format of 1-bit Error Detection Interrupt Enable Register (ECCIER)

Address: F0202H After reset: 00H R/W

Symbol	7	6	5	4	3	2	1	0
ECCIER	-	-	-	-	-	-	-	IEN

IEN	1-bit error detection interrupt enable bit
0	Interrupt disabled
1	Interrupt enabled

Cautions 1. Bits 1 to 7 of the ECCIER register are always read as 0. The write value should always be 0.
2. INTRAM interrupt request occurs regardless of the value of ECCIER on two bits error.

(3) Bit error detection register (ECCER)

Figure 27-10. Format of Bit Error Detection Register (ECCER)

Address: F0203H After reset: 00H R/W

Symbol	7	6	5	4	3	2	1	0
ECCER	-	-	-	-	-	-	-	DBERR

DBERR	Bit error detection flag
0	A 1-bit error detected.
1	A 2-bit error detected.

Cautions 1. The DBERR bit is cleared to 0 by writing 0.

2. If setting to 1 due to bit error detection and clearing to 0 by the CPU occur simultaneously, setting to 1 due to bit error detection has a priority.

3. If a bit error detection interrupt request (INTRAM) is not generated, the DBERR value is invalid.

(4) ECC test protect register (ECCTPR)

This register is used to prevent accidentally changing the setting of the ECCTMDR register to trigger entry to the ECC test mode.

Writing a value other than 07H prevents changes to the value of the ECCTMDR register

Figure 27-11. Format of ECC Test Protect Register (ECCTPR)

Address: F0204H After reset: 00H R/W

Symbol	7	6	5	4	3	2	1	0
ECCTPR	-	-	-	-	-	TPR2	TPR1	TPR0

TPR2 to TPR0	ECC test protect bits
Other than 00000111	Access to the ECCTMDR register is disabled.
00000111	Access to the ECCTMDR register is enabled.

(5) ECC test mode register (ECCTMDR)

Figure 27-12. Format of ECC Test Mode Register (ECCTMDR)

Address: F0205H After reset: 00H R/W

Symbol	7	6	5	4	3	2	1	0
ECCTMDR	-	-	-	-	-	TMD2	TMD1	TMD0

TMD2 to TMD0	ECC test mode bits
000	Normal operating mode
001	ECC test mode
Other than above	Setting prohibited

Cautions 1. Set the ECCTPR register to "07H" before accessing the ECCTMDR register.

2. Bits 3 to 7 of the ECCTMDR register are always read as 0. The write value should always be 0.

(6) Write data inversion register (ECCDWRVR)

This register is for use in confirming that the ECC is operating correctly by inverting both the parity bit of the write data and the ECC code.

<R>

Figure 27-13. Format of Write Data Inversion Register (ECCDWRVR)

Address: F0206H After reset: 0000H R/W

Symbol	15	14	13	12	11	10	9	8
ECCDWRVR	-	-	-	PRTYRV	ECCRV3	ECCRV2	ECCRV1	ECCRV0

Symbol	7	6	5	4	3	2	1	0
ECCDWRVR	DWRV7	DWRV6	DWRV5	DWRV4	DWRV3	DWRV2	DWRV1	DWRV0

PRTYRV	Parity inversion bit
0	Parity bit not inverted.
1	Parity bit inverted.

ECCRV3	ECC code inversion bit 3
0	Bit 3 of ECC code not inverted.
1	Bit 3 of ECC code inverted.

ECCRV2	ECC code inversion bit 2
0	Bit 2 of ECC code not inverted.
1	Bit 2 of ECC code inverted.

ECCRV1	ECC code inversion bit 1
0	Bit 1 of ECC code not inverted.
1	Bit 1 of ECC code inverted.

ECCRV0	ECC code inversion bit 0
0	Bit 0 of ECC code not inverted.
1	Bit 0 of ECC code inverted.

DWRV7	Write data inversion bit 7
0	Bit 7 of write data not inverted.
1	Bit 7 of write data inverted.

DWRV6	Write data inversion bit 6
0	Bit 6 of write data not inverted.
1	Bit 6 of write data inverted.

DWRV5	Write data inversion bit 5
0	Bit 5 of write data not inverted.
1	Bit 5 of write data inverted.

DWRV4	Write data inversion bit 4
0	Bit 4 of write data not inverted.
1	Bit 4 of write data inverted.

DWRV3	Write data inversion bit 3
0	Bit 3 of write data not inverted.
1	Bit 3 of write data inverted.

DWRV2	Write data inversion bit 2
0	Bit 2 of write data not inverted.
1	Bit 2 of write data inverted.

DWRV1	Write data inversion bit 1
0	Bit 1 of write data not inverted.
1	Bit 1 of write data inverted.

DWRV0	Write data inversion bit 0
0	Bit 0 of write data not inverted.
1	Bit 0 of write data inverted.

<R> **Cautions 1. The ECCDWRVR register can be set by a 16-bit memory manipulation instruction.**

2. Bits 13 to 15 of the ECCDWRVR register are always read as 0. The write value should always be 0.

3. All data written to the RAM, including data written to the stack, is inverted. Therefore, all peripheral functions that might rewrite the RAM must be stopped before a write data inversion bit is set. Do not set a write data inversion bit during OCD.

<Bit error detection interrupt>

When a bit error is detected, an interrupt request signal (INTRAM) is generated, and the address of the bit error is held in the error address store register (ERADR). If the bit error is 2 bits, the bit error detection flag (DBERR) in the bit error detection register (ECCER) is set to 1.

The 1-bit error detection interrupt enable register (ECCIER) can be used to specify whether to output or not an interrupt request signal when the bit error is 1 bit.

Since the CPU of the RL78 pre-reads the instruction code, RAM fetch area + 10 bytes should be initialized to perform RAM fetch.

Even when a bit error is detected by reading instruction code, an interrupt request is not generated. Thus, the address that causes the bit error cannot be known.

<ECC test function>

The following two modes can be selected by the ECC test mode register (ECCTMDR).

- Normal operating mode
- Test mode (bit error correction function test)

The ECC test mode register should be accessed after the protection by the ECC test protect register (ECCTPR) is cancelled.

Inverting the bit may significantly affect operation of the stack. The bit must thus only be inverted at times such as power-on so that it has no effect on the application.

For data read from the RAM, the existence of a bit error is detected in the 8-bit read data, 4-bit ECC code, and 1-bit parity bit.

If a bit error exists, an interrupt request is output and the address of the bit error is stored in the register. If the bit error is 1 bit, the data is corrected.

(a) Normal operating mode

For data write, a 4-bit ECC code is generated using 8-bit write data, and a 1-bit parity bit is generated using the write data and the ECC code. The generated data is written to the RAM as 13-bit data.

For data read, the existence of a bit error is detected in the 8-bit read data, 4-bit ECC code, and 1-bit parity bit. If the bit error is 1 bit, the data is corrected and then read.

(b) Test mode (bit error correction function test)

For data write, an ECC code is generated using write data, and a parity bit is generated using the write data and the ECC code. A given bit value of the 13-bit write data is inverted by the write data inversion register (ECCDWRVR), and the data is written to the RAM.

For data read, the existence of a bit error is detected in the read data, ECC code, and parity bit. If the bit error is 1 bit, the data is corrected and then read.

27.3.4 CPU stack pointer monitor function

The CPU stack pointer monitor is used to detect overflows and underflows of the stack pointer and to generate interrupts in response.

Caution The CPU stack pointer monitor function is disabled during on-chip debugging.

<Configuration>

This function has the following functions.

- SP overflow/underflow detection function
- SP overflow/underflow interrupt output function

When the SPM enable bit (SPMEN) is 1, an interrupt signal (INTSPM) is generated if the monitored stack pointer value is greater than the specified SFR value (SPOFR) or smaller than the specified SFR value (SPUFR).

When the SPM enable bit (SPMEN) is 1, writing to the SPOFR and SPUFR registers is invalid.

<Register setting method>

Figure 27-14 shows the register setting method of this function.

Figure 27-14. Register Setting Flow

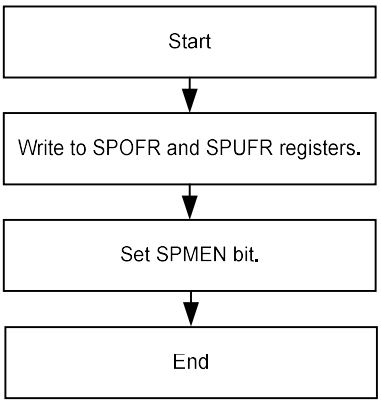

[Standard usage]

1. Write the initial value to the SPOFR and SPUFR registers.
2. Set the SPMEN bit in the SPMCTRL register.

<Control register>

Register Name	Description	Access Size
SPMCTRL	SPM control register	8 bits
SPOFR	SP overflow address setting register	16 bits
SPUFR	SP underflow address setting register	16 bits

Remarks 1. If the overflow or underflow state is retained, another overflow or underflow will not be detected. After an overflow or underflow was detected, reset the stack pointer to a value within the range of monitoring.

2. If an overflow or underflow interrupt request is received, the value obtained by subtracting 4 from the current value of the stack pointer is always used for saving the interrupt.

(1) SPM control register (SPMCTRL)

Figure 27-15. Format of SPM Control Register (SPMCTRL)

Address: F00D8H After reset: 00H R/W

Symbol	7	6	5	4	3	2	1	0
SPMCTRL	SPMEN	-	-	-	-	-	-	-

SPMEN	Stack pointer monitor SFR write enable/disable
0	Stack pointer monitoring disabled.
1	Stack pointer monitoring enabled.

Caution Writing 1 to the SPMEN bit is only valid, and writing 0 after setting SPMEN to 1 is invalid.

(2) SP overflow address setting register (SPOFR)

Figure 27-16. Format of SP Overflow Address Setting Register (SPOFR)

Address: F00DAH After reset: FFFEH R/W

Symbol	15	14	13	12	11	10	9	8	7	6	5	4	3	2	1	0
SPOFR	-	-	-	-	-	-	-	-	-	-	-	-	-	-	-	-

-	Stack pointer overflow address setting
0	Stack pointer overflow address
1	

Cautions 1. The lowest bit is fixed to 0.

2. If the values of bits 15 to 1 in stack pointer are greater than the specified values of bits 15 to 1 in SPOFR, an interrupt signal (INTSPM) is generated.
Stack pointer > SPOFR: INTSPM interrupt signal is generated.

3. When SPMEN = 1, writing to SPOFR is invalid.

(3) SP underflow address setting register (SPUFR)

Figure 27-17. Format of SP Underflow Address Setting Register (SPUFR)

Address: F00DCH After reset: 0000H R/W

Symbol	15	14	13	12	11	10	9	8	7	6	5	4	3	2	1	0
SPUFR	-	-	-	-	-	-	-	-	-	-	-	-	-	-	-	-

-	Stack pointer underflow address setting
0	Stack pointer underflow address
1	

Cautions 1. The lowest bit is fixed to 0.

2. If the values of bits 15 to 1 in stack pointer are smaller than the specified values of bits 15 to 1 in SPUFR, an interrupt signal (INTSPM) is generated.
Stack pointer < SPUFR: INTSPM interrupt signal is generated.

3. When SPMEN = 1, writing to SPUFR is invalid.

27.3.5 Clock monitor

The clock monitor samples the main system clock (f_{MAIN}) and main system/PLL select clock (f_{MP}) by using the low-speed on-chip oscillator. When oscillation of the main system clock stops, a reset request signal (RESCLM) is generated. When the main system/PLL select clock (f_{MP}) stops, the clock through mode is forcibly selected and SELPLLS is cleared (but SELPLL is not).

At the same time, an interrupt request signal (INTCLM) is generated.

(1) Configuration

Figure 27-18 shows a block diagram of the clock monitor.

Figure 27-18. Block Diagram of Clock Monitor

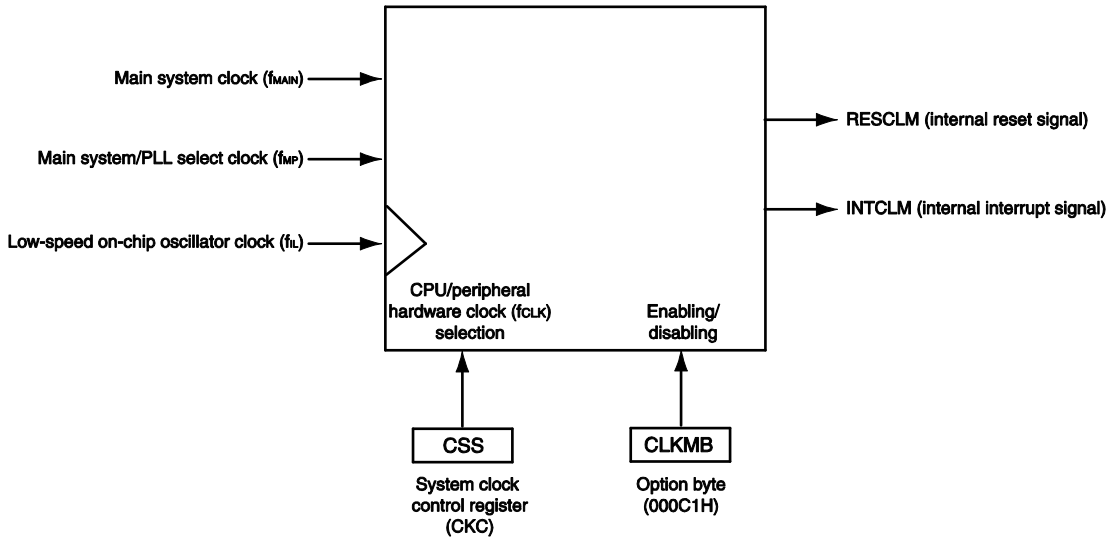

Table 27-1. Operating State of Clock Monitor

Operating State of Clock Monitor		State of Clock Monitor
$f_{CLK} = f_{SUB}$ or f_{IL}		Stopped
$f_{CLK} = f_{MP}/2^N$	STOP mode	Stopped
	SNOOZE mode	Stopped
	Oscillation stabilization time after setting of the MCM0 bit	Stopped
	CLKMB = 1	Stopped
	CLKMB = 0	Operating

(2) Starting and stopping of operation

Bit 4 (CLKMB) of the option byte (000C1H) should be set to 0 to enable operation of the clock monitor.

After the oscillation of the low-speed on-chip oscillator is set, the clock monitor starts operation.

The clock monitor automatically stops operating under the following conditions.

- In STOP mode
- In SNOOZE mode
- During counting of the oscillation stabilization time after STOP mode was released
- When the CPU/peripheral hardware clock frequency (f_{CLK}) is equal to the subsystem clock (f_{SUB}) or low-speed on-chip oscillator clock (f_{IL})
- When the sampling clock is stopped (low-speed on-chip oscillator is stopped)
- When bit 4 (CLKMB) of the option byte (000C1H) is 1

(3) Cautions for use

When entering the STOP mode by stopping the PLL clock during the operation of the clock monitor, set bit 0 (PLLON) in the PLL control register (PLLCTL) before executing the STOP instruction.

<R> Do not use the clock monitor function during on-chip debugging.

27.3.6 RAM guard function

This RAM guard function is used to protect data in the specified memory space.

If the RAM guard function is specified, writing to the specified RAM space is disabled, but reading from the space can be carried out as usual. The area used as the stack must not be a target of the RAM guard function.

<Control register>

(1) Invalid memory access detection control register (IAWCTL)

This register is used to control the detection of invalid memory access and RAM/SFR guard function.

GRAM1 and GRAM0 bits are used in RAM guard function.

The IAWCTL register can be set by an 8-bit memory manipulation instruction.

Reset signal generation clears this register to 00H.

Figure 27-19. Format of Invalid Memory Access Detection Control Register (IAWCTL)

Address: F0078H After reset: 00H R/W

Symbol	7	6	5	4	3	2	1	0
IAWCTL	IAWEN	0	GRAM1	GRAM0	0	GPORT	GINT	GCSC

GRAM1	GRAM0	RAM guard space Note
0	0	Disabled. RAM can be written to.
0	1	The 128 bytes starting at the lower RAM address
1	0	The 256 bytes starting at the lower RAM address
1	1	The 512 bytes starting at the lower RAM address

Note Do not set the RAM guard space to an area exceeding the size of the RAM of the product.

27.3.7 SFR guard function

This SFR guard function is used to protect data in the control registers used by the port function, interrupt function, clock control function, and voltage detector.

If the SFR guard function is specified, writing to the specified SFRs is disabled, but reading from the SFRs can be carried out as usual.

<Control register>

(1) Invalid memory access detection control register (IAWCTL)

This register is used to control the detection of invalid memory access and RAM/SFR guard function.

GPORT, GINT and GCSC bits are used in SFR guard function.

The IAWCTL register can be set by an 8-bit memory manipulation instruction.

Reset signal generation clears this register to 00H.

Figure 27-20. Format of Invalid Memory Access Detection Control Register (IAWCTL)

Address: F0078H After reset: 00H R/W

Symbol	7	6	5	4	3	2	1	0
IAWCTL	IAWEN	0	GRAM1	GRAM0	0	GPORT	GINT	GCSC

GPORT	Control registers of port function guard
0	Disabled. Control registers of port function can be read or written to.
1	Enabled. Writing to control registers of port function is disabled. Reading is enabled. [Guarded SFR] PMxx, PUxx, PIMxx, POMxx, PMCxx, PITHLxx, ADPC, PIOR Note

GINT	Registers of interrupt function guard
0	Disabled. Registers of interrupt function can be read or written to.
1	Enabled. Writing to registers of interrupt function is disabled. Reading is enabled. [Guarded SFR] IFxx, MKxx, PRxx, EGPx, EGNx

GCSC	Control registers of clock control function and voltage detector guard
0	Disabled. Control registers of clock control function and voltage detector can be read or written to.
1	Enabled. Writing to control registers of clock control function and voltage detector is disabled. Reading is enabled. [Guarded SFR] CMC, CSC, OSTS, CKC, PERx, OSMC, LVIM, LVIS, CANCKSEL, LINCKSEL, CKSEL, PLLCTL, MDIV, RTCCL, POCRES, STPSTC

Note Pxx (Port register) is not guarded.

27.3.8 Invalid memory access detection function

The IEC60730 standard mandates checking that the CPU and interrupts are operating correctly.

The illegal memory access detection function triggers a reset if a memory space specified as access-prohibited is accessed.

The illegal memory access detection function applies to the areas indicated by NG in Figure 27-21.

Figure 27-21. Invalid access detection area

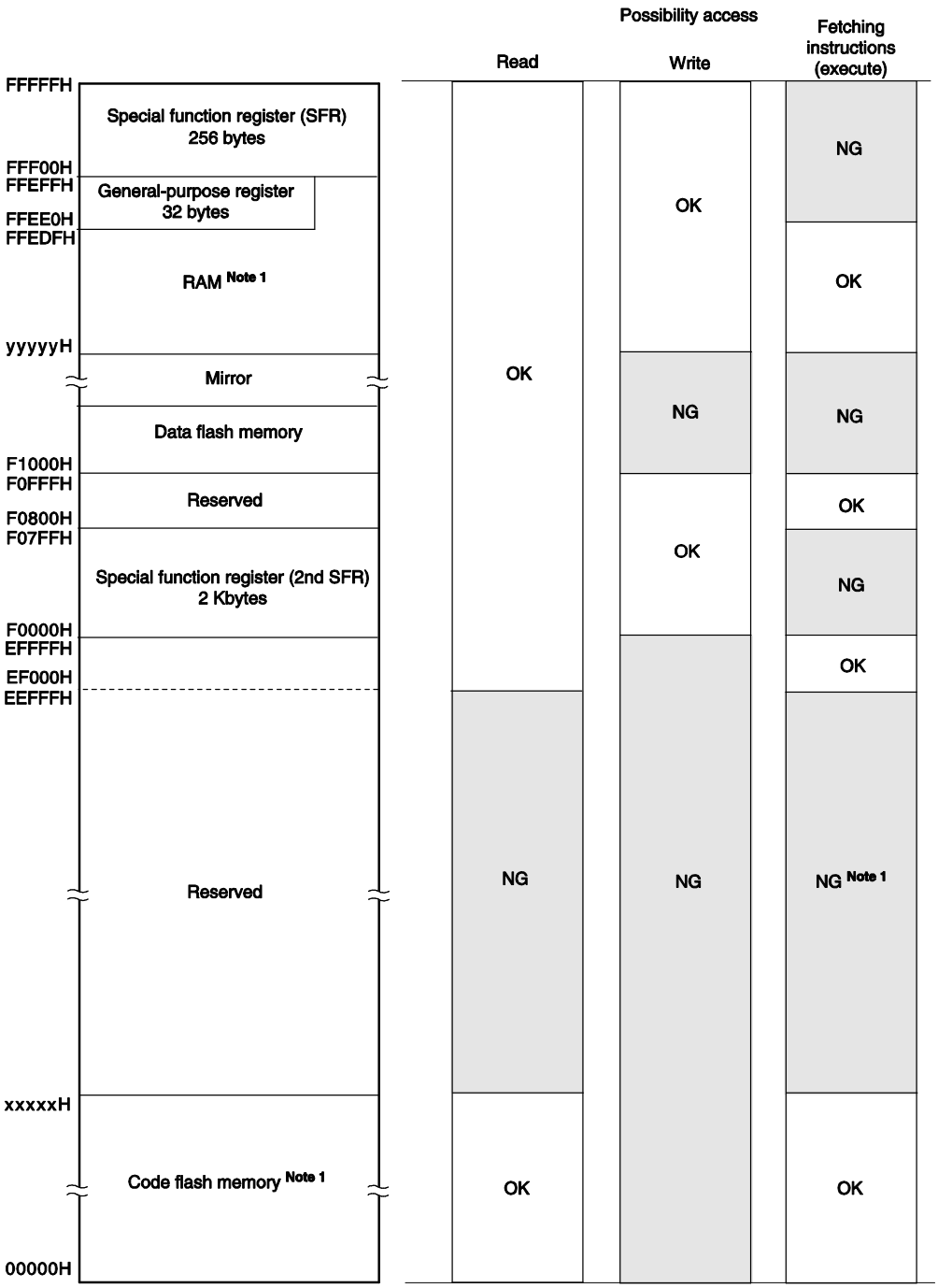

(**Notes** are listed on the next page.)

Notes 1. Code flash memory and RAM address of each product are as follows.

- RL78/F13 (LIN incorporated)

ROM size	Code flash memory (00000H to xxxxxH)
16 Kbytes	16384 × 8 bits (00000H to 03FFFH) Note 2
32 Kbytes	32768 × 8 bits (00000H to 07FFFH) Note 2
48 Kbytes	49152 × 8 bits (00000H to 0BFFFH) Note 2
64 Kbytes	65536 × 8 bits (00000H to 0FFFFH)
96 Kbytes	98304 × 8 bits (00000H to 17FFFH) Note 3
128 Kbytes	131072 × 8 bits (00000H to 1FFFFH)

RAM size	RAM(yyyyyH to FFEFFH)
1 Kbyte	1024 × 8 bits (FFB00H to FFEFFH)
2 Kbytes	2048 × 8 bits (FF700H to FFEFFH)
3 Kbytes	3072 × 8 bits (FF300H to FFEFFH)
4 Kbytes	4096 × 8 bits (FEF00H to FFEFFH)
6 Kbytes	6144 × 8 bits (FE700H to FFEFFH)
8 Kbytes	8192 × 8 bits (FDF00H to FFEFFH)

- RL78/F13 (CAN and LIN incorporated)

ROM size	Code flash memory (00000H to xxxxxH)
32 Kbytes	32768 × 8 bits (00000H to 07FFFH) Note 2
48 Kbytes	49152 × 8 bits (00000H to 0BFFFH) Note 2
64 Kbytes	65536 × 8 bits (00000H to 0FFFFH)
96 Kbytes	98304 × 8 bits (00000H to 17FFFH) Note 3
128 Kbytes	131072 × 8 bits (00000H to 1FFFFH)

RAM size	RAM (yyyyyH-FFEFFH)
2 Kbytes	2048 × 8 bits (FF700H to FFEFFH)
3 Kbytes	3072 × 8 bits (FF300H to FFEFFH)
4 Kbytes	4096 × 8 bits (FEF00H to FFEFFH)
6 Kbytes	6144 × 8 bits (FE700H to FFEFFH)
8 Kbytes	8192 × 8 bits (FDF00H to FFEFFH)

- RL78/F14

ROM size	Code flash memory (00000H to xxxxxH)
48 Kbytes	49152 × 8 bits (00000H to 0BFFFH) Note 2
64 Kbytes	65536 × 8 bits (00000H to 0FFFFH)
96 Kbytes	98304 × 8 bits (00000H to 17FFFH) Note 3
128 Kbytes	131072 × 8 bits (00000H to 1FFFFH)
192 Kbytes	196608 × 8 bits (00000H to 2FFFFH)
256 Kbytes	262144 × 8 bits (00000H to 3FFFFH)

RAM size	RAM (yyyyyH to FFEFFH)
4 Kbytes	4096 × 8 bits (FEF00H to FFEFFH)
6 Kbytes	6144 × 8 bits (FE700H to FFEFFH)
8 Kbytes	8192 × 8 bits (FDF00H to FFEFFH)
10 Kbytes	10240 × 8 bits (FD700H to FFEFFH)
16 Kbytes	16384 × 8 bits (FBF00H to FFEFFH)
20 Kbytes	20480 × 8 bits (FAF00H to FFEFFH)

2. Fetching of an instruction (for execution) by illegal access to a location in the area from xxxxxH to 0FFFFH leads to the generation of a reset due to the execution of an illegal instruction rather than being handled as
<R> illegal memory access. In case of reading, a reset is not generated and “FFH” is read.

3. Fetching of an instruction (for execution) by illegal access to a location in the area from xxxxxH to 1FFFFH leads to the generation of a reset due to the execution of an illegal instruction rather than being handled as
<R> illegal memory access. In case of reading, a reset is not generated and “FFH” is read.

<Control register>

- **Invalid memory access detection control register (IAWCTL)**

  This register is used to control the detection of invalid memory access and RAM/SFR guard function.
  IAWEN bit is used in invalid memory access detection function.
  The IAWCTL register can be set by an 8-bit memory manipulation instruction.
  Reset signal generation clears this register to 00H.

Figure 27-22. Format of Invalid Memory Access Detection Control Register (IAWCTL)

Address: F0078H After reset: 00H R/W

Symbol	7	6	5	4	3	2	1	0
IAWCTL	IAWEN	0	GRAM1	GRAM0	0	GPORT	GINT	GCSC

IAWEN Note	Control of invalid memory access detection
0	Disable the detection of invalid memory access.
1	Enable the detection of invalid memory access.

Remark By specifying WDTON = 1 for the option byte, the invalid memory access function is always enabled regardless of the setting for the IAWEN bit. (For details, see **CHAPTER 29 OPTION BYTE**.)

Note Only writing 1 to the IAWEN bit is valid, and writing 0 after setting the IAWEN bit to 1 is invalid.

27.3.9 Frequency detection function

The frequency detection function can detect whether the clock is operating on an abnormal frequency by comparing the high-speed on-chip oscillator clock, external X1 oscillation clock, or PLL clock with the low-speed on-chip oscillator clock (15 kHz).

Figure 27-23. Configuration of Frequency Detection Function

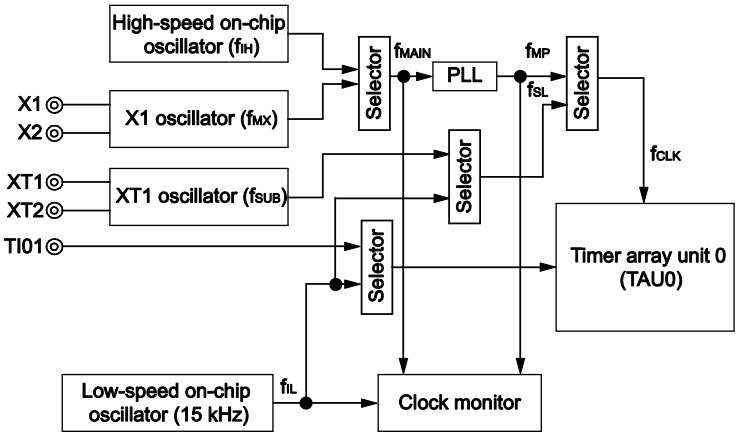

<Operational overview>

Whether the clock frequency is correct or not can be judged by measuring the pulse width under the following conditions:

- The high-speed on-chip oscillator clock (f_{IH}), external X1 oscillation clock (f_{MX}), or PLL clock (f_{PLL}) is selected as the CPU/peripheral hardware clock (f_{CLK}).
- The low-speed on-chip oscillator clock (f_{IL}: 15 kHz) is selected as the timer input for channel 1 of timer array unit 0 (TAU0).

If pulse width measurement results in an abnormal value, it can be concluded that the clock frequency is abnormal.
For how to execute pulse width measurement, see **6.7.4 Operation as input pulse interval measurement**.

<Control register>

- **Timer input select register 0 (TIS0)**

  This register is used to select the timer input of channel 1.

  By selecting the low-speed on-chip oscillator clock for the timer input, its pulse width can be measured to determine whether the proportional relationship between the low-speed on-chip oscillator clock and the timer operation clock is correct.

  The TIS0 register can be set by an 8-bit memory manipulation instruction.

  Reset signal generation clears this register to 00H.

Figure 27-24. Format of Timer Input Select Register 0 (TIS0)

Address: F0074H After reset: 00H R/W

Symbol	7	6	5	4	3	2	1	0
TIS0	TIS07 Note 1	TIS06 Note 1	0	TIS04 Note 2	0	TIS02	TIS01	TIS00

TIS07 Note 1	Selection of timer input used with channel 3 of timer array unit 0
0	Input signal of timer input pin (TI03)
1	Event input signal from ELC Note 3

TIS06 Note 1	Selection of timer input used with channel 2 of timer array unit 0
0	Input signal of timer input pin (TI02)
1	Event input signal from ELC Note 3

TIS04 Note 2	Selection of timer input used with channel 0 of timer array unit 0
0	Input signal of timer input pin (TI00)
1	Event input signal from ELC Note 3

TIS02	TIS01	TIS00	Selection of timer input used with channel 1 of timer array unit 0
0	0	0	Input signal of timer input pin (TI01)
0	0	1	Event input signal from ELC Note 3
0	1	0	Input signal of timer input pin (TI01)
0	1	1	
1	0	0	Low-speed on-chip oscillator clock (f_{IL})
1	0	1	Sub/low-speed on-chip oscillator select clock (f_{SL})
Other than above			Setting prohibited

Notes **1.** Provided only in products of group E. When writing data to the timer input select register 0 (TIS0) of other products, always write 0.

2. Provided only in products of groups D and E. When writing data to the timer input select register 0 (TIS0) of other products, always write 0.

3. Provided only in products of groups D and E. Do not set a value for any other products.

(**Cautions** are provided on the next page.)

Cautions 1. When selecting an event input signal from the ELC using timer input select register 0 (TIS0), select f_{CLK} using timer clock select register 0 (TPS0).

2. Do not change the select bit of the timer input while inputting data to the TImn pin (m = 0, 1; n = 0 to 7).

3. Each of the high-level and low-level widths of the timer input to be selected should be ($1/f_{MCK}$ + 10 ns) or more. So, the TIS02 bit cannot be set to 1 when f_{SL} is selected as f_{CLK} (the CSS bit in the CKC register is set to 1).

27.3.10 A/D test function

The A/D test function is used to check whether the A/D converter is operating normally by executing A/D conversions of an internal voltage of 0 V, the AV_{REF} voltage, and the internal reference voltage (1.45 V).
The below procedure can be used to confirm selection of the analog multiplexer and that wiring is not disconnected.

<1> Perform A/D conversion of the voltage on the ANIx pin (result of conversion 1).
<2> Select AV_{REFM} with the ADTES register, perform A/D conversion, and set the potential difference between the two terminals of the sampling capacitor of the A/D converter to 0 V.
<3> Perform A/D conversion of the voltage on the ANIx pin (result of conversion 2).
<4> Select AV_{REFP} with the ADTES register, perform A/D conversion, and set the potential difference between the two terminals of the sampling capacitor of the A/D converter to AV_{REF}.
<5> Perform A/D conversion of the voltage on the ANIx pin (result of conversion 3).
<6> Confirm that result of conversion 1 = result of conversion 2 = result of conversion 3.

The above procedure can be used to confirm selection of the analog multiplexer and that wiring is not disconnected.

Remarks 1. When the analog input voltage varies during conversion in steps <1> to <5>, use a different method to check the analog multiplexer.
2. The result of conversion will include error. Therefore, take the error into consideration when comparing the results of conversion.

Figure 27-25. Configuration of A/D Test Function

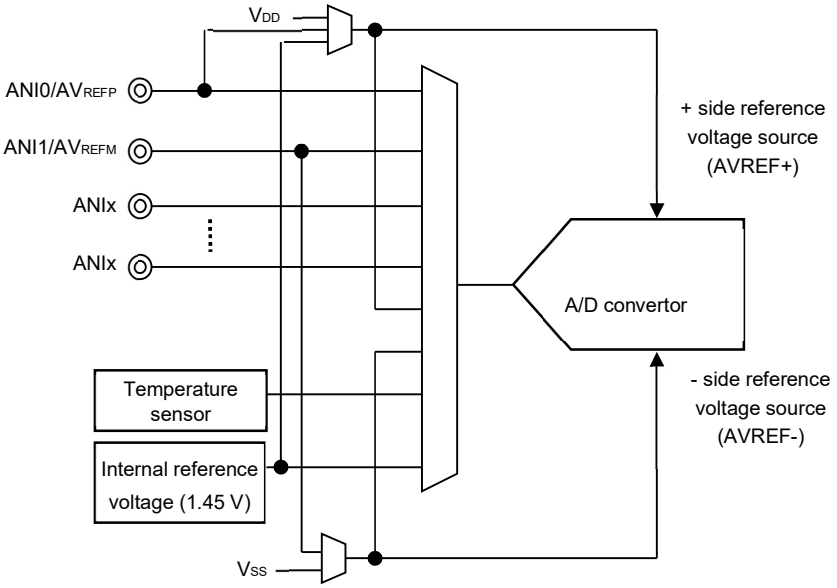

<Control register>

(1) A/D test register (ADTES)

This register is used to select the A/D converter's positive reference voltage AV_{REFP}, the A/D converter's negative reference voltage AV_{REFM}, or the analog input channel (ANIxx) as the target of A/D conversion.

When using the A/D test function, specify the following settings:

- Select AV_{REFM} as the target of A/D conversion when converting the internal 0 V.
- Select AV_{REFP} as the target of A/D conversion when converting AV_{REF}.

The ADTES register can be set by an 8-bit memory manipulation instruction.

Reset signal generation clears this register to 00H.

Figure 27-26. Format of A/D Test Register (ADTES)

Address: F0013H After reset: 00H R/W

Symbol	7	6	5	4	3	2	1	0
ADTES	0	0	0	0	0	0	ADTES1	ADTES0

ADTES1	ADTES0	A/D conversion target
0	0	ANIxx/temperature sensor output/ internal reference voltage output (1.45 V) (This is specified using the analog input channel specification register (ADS).)
1	0	AV_{REFM}
1	1	AV_{REFP}
Other than the above		Setting prohibited

(2) Analog input channel specification register (ADS)

This register specifies the input channel of the analog voltage to be A/D converted.

The ADS register can be set by a 1-bit or 8-bit memory manipulation instruction.

Reset signal generation clears this register to 00H.

Figure 27-27. Format of Analog Input Channel Specification Register (ADS) (1/2)

Address: FFF31H After reset: 00H R/W

Symbol	7	6	5	4	3	2	1	0
ADS	ADISS	0	0	ADS4	ADS3	ADS2	ADS1	ADS0

○ Select mode (ADMD = 0)

ADISS	ADS4	ADS3	ADS2	ADS1	ADS0	Analog input channel	Input source
0	0	0	0	0	0	ANI0	P33/AVREFP/ANI0
0	0	0	0	0	1	ANI1	P34/AVREFM/ANI1
0	0	0	0	1	0	ANI2	P80/ANI2/ANO0
0	0	0	0	1	1	ANI3	P81/ANI3/IVCMP00
0	0	0	1	0	0	ANI4	P82/ANI4/IVCMP01
0	0	0	1	0	1	ANI5	P83/ANI5/IVCMP02
0	0	0	1	1	0	ANI6	P84/ANI6/IVCMP03
0	0	0	1	1	1	ANI7	P85/ANI7/IVREF0
0	0	1	0	0	0	ANI8	P86/ANI8
0	0	1	0	0	1	ANI9	P87/ANI9
0	0	1	0	1	0	ANI10	P90/ANI10
0	0	1	0	1	1	ANI11	P91/ANI11
0	0	1	1	0	0	ANI12	P92/ANI12
0	0	1	1	0	1	ANI13	P93/ANI13
0	0	1	1	1	0	ANI14	P94/ANI14
0	0	1	1	1	1	ANI15	P95/ANI15
0	1	0	0	0	0	ANI16	P96/ANI16 Note1
0	1	0	0	0	1	ANI17	P97/ANI17 Note2
0	1	0	0	1	0	ANI18	P100/ANI18
0	1	0	0	1	1	ANI19	P101/ANI19
0	1	0	1	0	0	ANI20	P102/ANI20
0	1	0	1	0	1	ANI21	P103/ANI21
0	1	0	1	1	0	ANI22	P104/ANI22
0	1	0	1	1	1	ANI23	P105/ANI23
0	1	1	0	0	0	ANI24	P125/ANI24
0	1	1	0	0	1	ANI25	P120/ANI25
0	1	1	0	1	0	ANI26	P96/ANI26 Note3, P70/ANI26 Note4
0	1	1	0	1	1	ANI27	P97/ANI27 Note5, P71/ANI27 Note6
0	1	1	1	0	0	ANI28	P72/ANI28
0	1	1	1	0	1	ANI29	P73/ANI29
0	1	1	1	1	0	ANI30	P74/ANI30
1	1	1	1	1	1	Setting prohibited	
1	0	0	0	0	0	–	Temperature sensor output
1	0	0	0	0	1	–	Internal reference voltage output (1.45 V)

(**Notes** are listed on the next page.)

Notes 1. RL78/F14 products with 64 or 80 pins and 128 Kbytes to 256 Kbytes of code flash memory, or RL78/F14 products with 100 pins and 64 Kbytes to 256 Kbytes of code flash memory.

2. RL78/F14 products with 80 pins and 128 Kbytes to 256 Kbytes of code flash memory, or RL78/F14 products with 100 pins and 64 Kbytes to 256 Kbytes of code flash memory.

3. RL78/F14 products with 64 or 80 pins and 64 Kbytes to 96 Kbytes of code flash memory, RL78/F13 (CAN and LIN incorporated) products with 80 pins and 64 Kbytes to 128 Kbytes of code flash memory,
or RL78/F13 (CAN and LIN incorporated) products with 64 pins and 32 Kbytes to 128 Kbytes of code flash memory,
or RL78/F13 (LIN incorporated) products with 80 pins and 64 Kbytes to 128 Kbytes of code flash memory,
or RL78/F13 (LIN incorporated) products with 64 pins and 96 Kbytes to 128 Kbytes of code flash memory.

4. RL78/F14 products with 48, 64, or 80 pins and 128 Kbytes to 256 Kbytes of code flash memory, or RL78/F14 products with 100 pins and 64 Kbytes to 256 Kbytes of code flash memory.

5. RL78/F14 products with 80 pins and 64 Kbytes to 96 Kbytes of code flash memory, RL78/F13 (CAN and LIN incorporated) or RL78/F13 (LIN incorporated) products with 80 pins and 64 Kbytes to 128 Kbytes of code flash memory.

6. RL78/F14 products with 48 or 80 pins and 128 Kbytes to 256 Kbytes of code flash memory, or RL78/F14 products with 100 pins and 64 Kbytes to 256 Kbytes of code flash memory

Figure 27-27. Format of Analog Input Channel Specification Register (ADS) (2/2)

Address: FFF31H After reset: 00H R/W

Symbol	7	6	5	4	3	2	1	0
ADS	ADISS	0	0	ADS4	ADS3	ADS2	ADS1	ADS0

○ Scan mode (ADMD = 1)

ADISS	ADS4	ADS3	ADS2	ADS1	ADS0	Analog input channel			
						Scan 0	Scan 1	Scan 2	Scan 3
0	0	0	0	0	0	ANI0	ANI1	ANI2	ANI3
0	0	0	0	0	1	ANI1	ANI2	ANI3	ANI4
0	0	0	0	1	0	ANI2	ANI3	ANI4	ANI5
0	0	0	0	1	1	ANI3	ANI4	ANI5	ANI6
0	0	0	1	0	0	ANI4	ANI5	ANI6	ANI7
0	0	0	1	0	1	ANI5	ANI6	ANI7	ANI8
0	0	0	1	1	0	ANI6	ANI7	ANI8	ANI9
0	0	0	1	1	1	ANI7	ANI8	ANI9	ANI10
0	0	1	0	0	0	ANI8	ANI9	ANI10	ANI11
0	0	1	0	0	1	ANI9	ANI10	ANI11	ANI12
0	0	1	0	1	0	ANI10	ANI11	ANI12	ANI13
0	0	1	0	1	1	ANI11	ANI12	ANI13	ANI14
0	0	1	1	0	0	ANI12	ANI13	ANI14	ANI15
0	1	0	0	0	0	ANI16	ANI17	ANI18	ANI19
0	1	0	0	0	1	ANI17	ANI18	ANI19	ANI20
0	1	0	0	1	0	ANI18	ANI19	ANI20	ANI21
0	1	0	0	1	1	ANI19	ANI20	ANI21	ANI22
0	1	0	1	0	0	ANI20	ANI21	ANI22	ANI23
Other than the above						Setting prohibited			

Cautions 1. Be sure to clear bits 5 and 6 to 0.

2. In port mode registers 3, 7 to 10, and 12 (PM3, PM7 to PM10, PM12), set the ADPC and PMCxx registers to the input mode for pins to be set as analog inputs.

3. In the ADS register, do not select a pin which is set as a digital I/O pin in the A/D port configuration register (ADPC).

4. In the ADS register, do not select a pin which is set as a digital I/O pin in the port mode control register 7, 9, 12 (PMC7, PMC9, PMC12)

5. Only rewrite the value of the ADISS bit while A/D voltage comparator operation is stopped (which is indicated by the ADCE bit of A/D converter mode register 0 (ADM0) being 0).

6. If using AV_{REFP} as the + side reference voltage source of the A/D converter, do not select ANI0 as an A/D conversion channel.

7. If using AV_{REFM} as the - side reference voltage source of the A/D converter, do not select ANI1 as an A/D conversion channel.

8. If ADISS is set to 1, the internal reference voltage (1.45 V) cannot be used for the + side reference voltage source.

9. When the CPU enters the STOP mode or HALT mode while being driven by the subsystem/low-speed on-chip oscillator select clock, do not set the ADISS bit to 1. Setting ADISS to 1 increases the value given in 34.3.2 Supply Current Characteristics or 35.3.2 Supply Current Characteristics.

10. Ignore the result of conversion if the corresponding ANI pin is not present.

27.3.11 Digital output signal level detection function for I/O ports

By using the digital output signal level detection function for I/O ports, the digital output level of the pin can be read when the port is set to output mode (the PMmn bit in the port mode register (PMm) is 0).

This function allows the output level of the pin to be read even when the PMnm (I/O mode) bit is set to output mode. As a result, the CPU can determine the current output level is a high or low level. For details on the registers to control this function, see **CHAPTER 4 PORT FUNCTIONS**.

<Control register>

(1) Port mode select register (PMS)

This register is used to select the output level from output latch level or pin output level when the port is output mode in which PMm bit of port mode register (PMm) is 0.

This register can be set by a 1-bit or 8-bit memory manipulation instruction.

Reset signal generation clears these registers to 00H.

Figure 27-28. Format of Port Mode Select Register (PMS)

Address: F0077H After reset: 00H R/W

Symbol	7	6	5	4	3	2	1	0
PMS	0	0	0	0	0	0	0	PMS0

PMS0	Method for selecting output level to be read when port is output mode (PMmn = 0)
0	Pmn register value is read.
1	Output level of the pin is read.

Remark m = 0, 1, 3 to 10, 12 to 15
n = 0 to 7

CHAPTER 28 REGULATOR

28.1 Regulator Overview

The RL78/F13 and RL78/F14 contain a circuit for operating the device with a constant voltage. At this time, in order to stabilize the regulator output voltage, connect the REGC pin to V_{SS} via a capacitor (0.47 to 1 μF). Also, use a capacitor with good characteristics, since it is used to stabilize internal voltage.

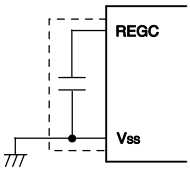

Caution Keep the wiring length as short as possible for the broken-line part in the above figure.

For the regulator output voltage, see **Table 28-1**.

Table 28-1. Regulator Output Voltage Conditions

Mode	Output Voltage	Condition
High-speed main mode	1.86 V	In STOP mode
		When the high-speed system clock (f_{MX}), the high-speed on-chip oscillator clock (f_{IH}), and PLL clock (f_{PLL}) are stopped during CPU operation with the subsystem/low-speed on-chip oscillator clock select clock (f_{SL})
		When the high-speed system clock (f_{MX}), the high-speed on-chip oscillator clock (f_{IH}), and PLL clock (f_{PLL}) are stopped during the HALT mode when the CPU operation with the subsystem/low-speed on-chip oscillator clock select clock (f_{SL}) has been set
	2.1 V	Other than above (include during OCD mode) **Note**

Note When it shifts to the subsystem/low-speed on-chip oscillator clock select clock operation or STOP mode during the on-chip debugging, the regulator output voltage is kept at 2.1 V (not decline to 1.86 V).

CHAPTER 29 OPTION BYTE

29.1 Functions of Option Bytes

Addresses 000C0H to 000C3H of the flash memory of the RL78/F13 and RL78/F14 form an option byte area.

Option bytes consist of user option byte (000C0H to 000C2H) and on-chip debug option byte (000C3H).

Upon power application or resetting and starting, an option byte is automatically referenced and a specified function is set. When using the product, be sure to set the following functions by using the option bytes.

To use the boot swap operation during self programming, 000C0H to 000C3H are replaced by 020C0H to 020C3H. Therefore, set the same values as 000C0H to 000C3H to 020C0H to 020C3H.

29.1.1 User option byte (000C0H to 000C2H/020C0H to 020C2H)

(1) 000C0H/020C0H

- ○ Operation of watchdog timer
  - Operation is stopped or enabled in the HALT, STOP, or SNOOZE mode.
- ○ Setting of interval time of watchdog timer
- ○ Operation of watchdog timer
  - Operation is stopped or enabled.
- ○ Setting of window open period of watchdog timer
- ○ Setting of interval interrupt of watchdog timer
  - Used or not used

Caution Set the same value as 000C0H to 020C0H when the boot swap operation is used because 000C0H is replaced by 020C0H.

(2) 000C1H/020C1H

- ○ Setting of LVD operation mode
  - Interrupt & reset mode
  - Reset mode
  - Interrupt mode
- ○ Setting of LVD detection level (V_{LVDH}, V_{LVDL}, V_{LVD})
- ○ Operation of clock monitor
  - Operation is stopped or enabled.

Caution Set the same value as 000C1H to 020C1H when the boot swap operation is used because 000C1H is replaced by 020C1H.

(3) 000C2H/020C2H

○ Setting of RESOUTB output function

○ Setting of the frequency of the high-speed on-chip oscillator

- Select from 1 MHz, 4 MHz, 8 MHz, 12 MHz, 16 MHz, 24 MHz, 32 MHz, 48 MHz, and 64 MHz.

Caution Set the same value as 000C2H to 020C2H when the boot swap operation is used because 000C2H is replaced by 020C2H.

29.1.2 On-chip debug option byte (000C3H/ 020C3H)

○ Control of on-chip debug operation

- On-chip debug operation is disabled or enabled.

○ Control of hot plug-in

- Hot plug-in operation is disabled or enabled.

○ Handling of data of flash memory in case of failure in on-chip debug security ID authentication

- Data of flash memory is erased or not erased in case of failure in on-chip debug security ID authentication.

Caution Set the same value as 000C3H to 020C3H when the boot swap operation is used because 000C3H is replaced by 020C3H.

29.2 Format of User Option Byte

The format of user option byte is shown below.

Figure 29-1. Format of User Option Byte (000C0H/020C0H)

Address: 000C0H/020C0H[Note 1] After reset: — (user setting value [Note 2])

7	6	5	4	3	2	1	0
WDTINT	WINDOW1	WINDOW0	WDTON	WDCS2	WDCS1	WDCS0	WDSTBYON

WDTINT	Use of interval interrupt of watchdog timer
0	Interval interrupt is not used.
1	Interval interrupt is generated when 75% + 1/2 f_{WDT} of the overflow time is reached.

WINDOW1	WINDOW0	Watchdog timer window open period[Note 3]
0	0	Setting prohibited
0	1	50%
1	0	75%
1	1	100%

WDTON	Operation control of watchdog timer counter
0	Counter operation disabled (counting stopped after reset)
1	Counter operation enabled (counting started after reset)

WDCS2	WDCS1	WDCS0	Watchdog timer overflow time (f_{WDT} = 17.25 kHz (MAX.))
0	0	0	$2^6/f_{WDT}$ (3.71 ms)
0	0	1	$2^7/f_{WDT}$ (7.42 ms)
0	1	0	$2^8/f_{WDT}$ (14.84 ms)
0	1	1	$2^9/f_{WDT}$ (29.68 ms)
1	0	0	$2^{11}/f_{WDT}$ (118.72 ms)
<R> 1	0	1	$2^{13}/f_{WDT}$ (474.89 ms)
<R> 1	1	0	$2^{14}/f_{WDT}$ (949.79 ms)
<R> 1	1	1	$2^{16}/f_{WDT}$ (3799.18 ms)

WDSTBYON	Operation control of watchdog timer counter (HALT/STOP/SNOOZE mode)
0	Counter operation stopped in HALT/STOP/SNOOZE mode[Note 3]
1	Counter operation enabled in HALT/STOP/SNOOZE mode

Notes 1. Set the same value as 000C0H to 020C0H when the boot swap operation is used because 000C0H is replaced by 020C0H.

2. The setting at shipment of the user option byte is FFH.

3. The window open period is 100% when WDSTBYON = 0, regardless the value of the WINDOW1 and WINDOW0 bits.

Caution The watchdog timer continues its operation during EEPROM emulation. During processing, the interrupt acknowledge time is delayed. Set the overflow time and window open period taking this delay into consideration.

Remarks 1. f_{WDT}: Low-speed on-chip oscillator clock frequency

2. By specifying WDTON = 1, the invalid memory access detection function is always enabled regardless of the setting for the IAWEN bit. (For details, see **27.3.8 Invalid memory access detection function**.)

Figure 29-2. Format of User Option Byte (000C1H/020C1H) (1/2)

Address: 000C1H/020C1H[Note 1] After reset: — (user setting value [Note 2])

7	6	5	4	3	2	1	0
VPOC2	VPOC1	VPOC0	CLKMB	LVIS1	LVIS0	LVIMDS1	LVIMDS0

- LVD setting (interrupt & reset mode)

<R>

Detection voltage			Option byte Setting Value							
V_{LVDH}		V_{LVDL}	VPOC2	VPOC1	VPOC0	CLKMB	LVIS1	LVIS0	LVIMDS1	LVIMDS0
Rising edge	Falling edge	Falling edge								
4.42 V	4.32 V	2.75 V	0	0	1	× [Note 3]	0	0	1	0
4.62 V	4.52 V	2.75 V	0	1	0	× [Note 3]	0	0		
3.22 V	3.15 V	2.75 V	0	1	1	× [Note 3]	0	1		
4.74 V	4.64 V					× [Note 3]	0	0		
Other than above			Setting prohibited							

- LVD setting (reset mode)

Detection voltage		Option byte Setting Value							
V_{LVD}		VPOC2	VPOC1	VPOC0	CLKMB	LVIS1	LVIS0	LVIMDS1	LVIMDS0
Rising edge	Falling edge								
2.81 V	2.75 V	0	1	1	× [Note 3]	1	1	1	1
3.02 V	2.96 V	0	0	0	× [Note 3]	0	1		
3.22 V	3.15 V	0	1	1	× [Note 3]	0	1		
4.42 V	4.32 V	0	0	1	× [Note 3]	0	0		
4.62 V	4.52 V	0	1	0	× [Note 3]	0	0		
4.74 V	4.64 V	0	1	1	× [Note 3]	0	0		
Other than above		Setting prohibited							

Notes 1. Set the same value as 000C1H to 020C1H when the boot swap operation is used because 000C1H is replaced by 020C1H.

2. The setting at shipment of the user option byte is FFH.

3. Write the setting value of the clock monitor bit (CLKMB).

Remarks 1. ×: Don't care

2. For details of the LVD, see **26.1 Functions of Voltage Detector**.

Figure 29-2. Format of User Option Byte (000C1H/020C1H) (2/2)

Address: 000C1H/020C1H[Note 1] After reset: — (user setting value [Note 2])

7	6	5	4	3	2	1	0
VPOC2	VPOC1	VPOC0	CLKMB	LVIS1	LVIS0	LVIMDS1	LVIMDS0

- LVD setting (interrupt mode)

Detection voltage		Option byte Setting Value							
V_{LVD}		VPOC2	VPOC1	VPOC0	CLKMB	LVIS1	LVIS0	LVIMDS1	LVIMDS0
Rising edge	Falling edge								
2.81 V	2.75 V	0	1	1	× [Note 3]	1	1	0	1
3.02 V	2.96 V	0	0	0	× [Note 3]	0	1		
3.22 V	3.15 V	0	1	1	× [Note 3]	0	1		
4.42 V	4.32 V	0	0	1	× [Note 3]	0	0		
4.62 V	4.52 V	0	1	0	× [Note 3]	0	0		
4.74 V	4.64 V	0	1	1	× [Note 3]	0	0		
Other than above		Setting prohibited							

- LVD setting (LVD off)

Detection voltage		Option byte Setting Value							
V_{LVD}		VPOC2	VPOC1	VPOC0	CLKMB	LVIS1	LVIS0	Mode setting	
Rising edge	Falling edge							LVIMDS1	LVIMDS0
–	–	1	×	×	× [Note 3]	×	×	×	1
Other than above		Setting prohibited							

- Setting of clock monitor operation

CLKMB	Control of clock monitor operation
0	Operation is enabled.
1	Operation is stopped.

Notes 1. Set the same value as 000C1H to 020C1H when the boot swap operation is used because 000C1H is replaced by 020C1H.

2. The setting at shipment of the user option byte is FFH.

3. Write the setting value of the clock monitor bit (CLKMB).

Remarks 1. ×: don't care

2. For details of the LVD, see **26.1 Functions of Voltage Detector**.

Figure 29-3. Format of Option Byte (000C2H/020C2H)

Address: 000C2H/020C2H[Note 1] After reset: — (user setting value [Note 2])

7	6	5	4	3	2	1	0
1	1	RESOUTB	FRQSEL4	FRQSEL3	FRQSEL2	FRQSEL1	FRQSEL0

RESOUTB	RESOUTB output function
0	Selects P130 as the RESOUT pin • The low level is output during a reset. • The high level is automatically output upon release from the reset state. • The output latch value has no effect on the output.
1	Selects P130 as a general port pin (output only) • The low level is output during a reset. • The output latch value is output upon release from the reset state.

FRQSEL4	FRQSEL3	FRQSEL2	FRQSEL1	FRQSEL0	Frequency of the high-speed on-chip oscillator clock
1	1	0	0	0	64 MHz
1	0	0	0	0	48 MHz
0	1	0	0	0	32 MHz
0	0	0	0	0	24 MHz
0	1	0	0	1	16 MHz
0	0	0	0	1	12 MHz
0	1	0	1	0	8 MHz
0	1	0	1	1	4 MHz
0	1	1	0	1	1 MHz
Other than above					Setting prohibited

Notes 1. Set the same value as 000C2H to 020C2H when the boot swap operation is used because 000C2H is replaced by 020C2H.

2. The setting at shipment of the user option byte is FFH.

29.3 Format of On-chip Debug Option Byte

The format of on-chip debug option byte is shown below.

Figure 29-4. Format of On-chip Debug Option Byte (000C3H/020C3H)

Address: 000C3H/020C3H[Note 1]

7	6	5	4	3	2	1	0
OCDENSET	0	0	0	0	1	HPIEN [Note 2]	OCDERSD

OCDENSET	HPIEN [Note 2]	OCDERSD	Control of on-chip debug operation
0	0	0	Disables on-chip debug operation.
1	0	0	Enables on-chip debugging and disables hot plug-in operation. Erases data of flash memory in case of failures in authenticating on-chip debug security ID.
1	0	1	Enables on-chip debugging and disables hot plug-in operation. Does not erase data of flash memory in case of failures in authenticating on-chip debug security ID.
1	1	1	Enables on-chip debugging and hot plug-in operation. Does not erase data of flash memory in case of failures in authenticating on-chip debug security ID.
Other than the above			Setting prohibited

Notes 1. Set the same value as 000C3H to 020C3H when the boot swap operation is used because 000C3H is replaced by 020C3H.

2. When the HPIEN bit is set to 1, the low-speed on-chip oscillator operates and cannot be stopped by the user program. The low-speed on-chip oscillator can be stopped by register setting only in standby mode. Such operation is performed because the low-speed on-chip oscillator detects hot plug-in.

Caution Bits 7, 1, and 0 (OCDENSET, HPIEN, and OCDERSD) can only be specified a value.
Be sure to set 00001B to bits 6 to 2.

<R> **Remark** The value on bits 3 to 1 will be written over when the on-chip debug function is in use and thus it will become unstable after the setting. However, be sure to set the default values (0, 1) to bits 3 and 2 at setting.

29.4 Setting of Option Byte

The user option byte and on-chip debug option byte can be set using the assembler linker option, in addition to describing to the source. When doing so, the contents set by using the linker option take precedence, even if descriptions exist in the source, as mentioned below.

A software description example of the option byte setting is shown below.

```
OPT   CSEG        OPT_BYTE
      DB          36H     ; Does not use interval interrupt of watchdog timer,
                          ; Enables watchdog timer operation,
                          ; Window open period of watchdog timer is 50%,
                          ; Overflow time of watchdog timer is 2^9/fWDT,
                          ; Stops watchdog timer operation during HALT/STOP/SNOOZE mode
      DB          22H     ; Select 2.75 V for VLVDL
                          ; Select rising edge 4.42 V, falling edge 4.32 V for VLVDH
                          ; Select the interrupt & reset mode as the LVD operation mode
                          ; Operation of clock monitor
      DB          EDH     ; Setting of the RESOUTB output function
                          ; Select 1 MHz as the frequency of the high-speed on-chip oscillator clock
      DB          85H     ; Enables on-chip debug operation, disables hot plug-in operation,
                            does not erase flash memory data when security ID authorization fails
```

When the boot swap function is used during self programming, 000C0H to 000C3H is switched to 020C0H to 020C3H. Describe to 020C0H to 020C3H, therefore, the same values as 000C0H to 000C3H as follows.

```
OPT2  CSEG   AT   020C0H
      DB          36H     ; Does not use interval interrupt of watchdog timer,
                          ; Enables watchdog timer operation,
                          ; Window open period of watchdog timer is 50%,
                          ; Overflow time of watchdog timer is 2^9/fWDT,
                          ; Stops watchdog timer operation during HALT/STOP/SNOOZE mode
      DB          22H     ; Select 2.75 V for VLVDL
                          ; Select rising edge 4.42 V, falling edge 4.32 V for VLVDH
                          ; Select the interrupt & reset mode as the LVD operation mode
                          ; Operation of clock monitor
      DB          EDH     ; Setting of the RESOUTB output function
                          ; Select 1 MHz as the frequency of the high-speed on-chip oscillator clock
      DB          85H     ; Enables on-chip debug operation, disables hot plug-in operation,
                            does not erase flash memory data when security ID authorization fails
```

Caution To specify the option byte by using assembly language, use OPT_BYTE as the relocation attribute name of the CSEG pseudo instruction. To specify the option byte to 020C0H to 020C3H in order to use the boot swap function, use the relocation attribute AT to specify an absolute address.

CHAPTER 30 FLASH MEMORY

The RL78/F13 and RL78/F14 incorporate the flash memory to which a program can be written, erased, and overwritten. The flash memory includes the “code flash memory”, in which programs can be executed, and the “data flash memory”, an area for storing data.

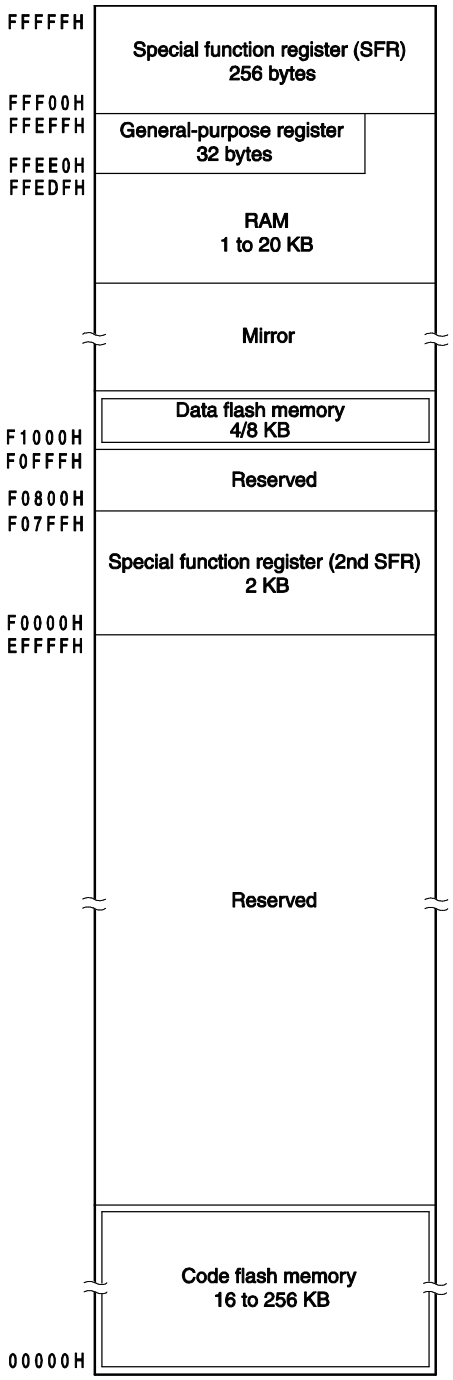

The methods for programming the flash memory are shown below.

The code flash memory can be rewritten to through serial programming using a flash memory programmer or external device (UART communication) or through self-programming.

- Serial programming using flash memory programmer
  Data can be written to the flash memory on-board or off-board, by using a dedicated flash memory programmer. For details, see **30.4 Serial Programming Method**.
- Serial programming using external device (UART communication)
  Data can be written to the flash memory on-board through UART communication with an external device (a microcontroller or ASIC). For details, see **30.2 Serial Programming Using External Device (that Incorporates UART)**.
- Self-programming
  The user application can execute self-programming of the code flash memory by using the flash self-programming library. For details, see **30.6 Self-Programming**.

The data flash memory can be rewritten to by using the data flash library during user program execution (background operation). For details about accessing or writing to the data flash memory, see **30.8 Data Flash**.

30.1 Serial Programming Using Flash Memory Programmer

The following dedicated flash memory programmer can be used to write data to the internal flash memory of the RL78/F13 and RL78/F14.

- PG-FP5, FL-PR5
- E1 on-chip debugging emulator

Data can be written to the flash memory on-board or off-board, by using a dedicated flash memory programmer.

(1) On-board programming

The contents of the flash memory can be rewritten after the RL78/F13 or RL78/F14 has been mounted on the target system. The connectors that connect the dedicated flash memory programmer must be mounted on the target system.

(2) Off-board programming

Data can be written to the flash memory with a dedicated program adapter (FA series) before the RL78/F13 or RL78/F14 is mounted on the target system.

Remark FL-PR5 and FA series are products of Naito Densei Machida Mfg. Co., Ltd.

Table 30-1. Wiring Between the RL78/F13 or RL78/F14 and Dedicated Flash Memory Programmer

Pin Configuration of Dedicated Flash Memory Programmer				Pin Name	Pin No.			
					20-pin	30-pin	32-pin	48-pin
Signal Name		I/O	Pin Function		SSOP	SSOP	VQFN (5x5)	LQFP (7x7), VQFN (7x7)
PG-FP5, FL-PR5	E1 on-chip debugging emulator							
–	TOOL0	I/O	Transmit/receive signal	TOOL0/ P40	3	8	3	3
SI/RxD	–	I/O	Transmit/receive signal					
–	$\overline{\text{RESET}}$	Output	Reset signal	$\overline{\text{RESET}}$	4	9	4	4
/RESET	–	Output						
V_{DD}		I/O	V_{DD} voltage generation/ power monitoring	V_{DD}	10	15	10	12
GND		–	Ground	V_{SS}	9	14	9	11
				EV_{SS}	–	–	–	–
				REGC **Note**	8	13	8	10
EMV_{DD}		–	Driving power for TOOL0 pin	V_{DD}	10	15	10	12
				EV_{DD}	–	–	–	–

Pin Configuration of Dedicated Flash Memory Programmer				Pin Name	Pin No.		
					64-pin	80-pin	100-pin
Signal Name		I/O	Pin Function		LQFP (10x10)	LQFP (12x12)	LQFP (14x14)
PG-FP5, FL-PR5	E1 on-chip debugging emulator						
–	TOOL0	I/O	Transmit/receive signal	TOOL0/ P40	5	9	12
SI/RxD	–	I/O	Transmit/receive signal				
–	$\overline{\text{RESET}}$	Output	Reset signal	$\overline{\text{RESET}}$	6	10	13
/RESET	–	Output					
V_{DD}		I/O	V_{DD} voltage generation/ power monitoring	V_{DD}	15	19	22
GND		–	Ground	V_{SS}	13	17	20
				EV_{SS}	14	18	21, 43
				REGC **Note**	12	16	19
EMV_{DD}		–	Driving power for TOOL0 pin	V_{DD}	–	–	–
				EV_{DD}	16	20	23, 53

Note Connect REGC pin to ground via a capacitor (0.47 to 1 μF).

Remark Pins that are not indicated in the above table can be left open when using the flash memory programmer for flash programming.

30.1.1 Programming Environment

The environment required for writing a program to the flash memory of the RL78/F13 or RL78/F14 is illustrated below.

Figure 30-1. Environment for Writing Program to Flash Memory

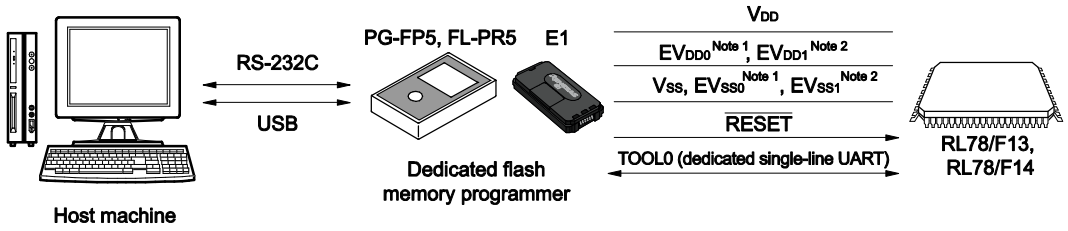

Notes 1. 64, 80, 100-pin products only.
2. 100-pin products only.

A host machine that controls the dedicated flash memory programmer is necessary.

To interface between the dedicated flash memory programmer and the RL78/F13 or RL78/F14, the TOOL0 pin is used for manipulation such as writing and erasing via a dedicated single-line UART.

30.1.2 Communication Mode

Communication between the dedicated flash memory programmer and the RL78/F13 or RL78/F14 is established by serial communication using the TOOL0 pin via a dedicated single-line UART of the RL78/F13 or RL78/F14.

Transfer rate: 1 M, 500 k, 250 k, 115.2 kbps

Figure 30-2. Communication with Dedicated Flash Memory Programmer

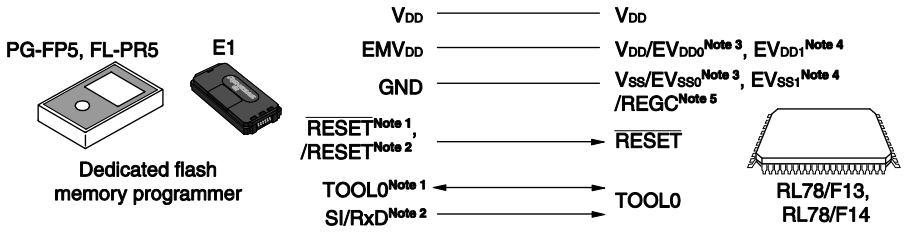

Notes 1. When using E1 on-chip debugging emulator.
2. When using PG-FP5 or FL-PR5.
3. 64, 80, 100-pin products only.
4. 100-pin products only.
5. Connect REGC pin to ground via a capacitor (0.47 to 1 μF).

The dedicated flash memory programmer generates the following signals for the RL78/F13 and RL78/F14. See the manual of PG-FP5, FL-PR5, or E1 on-chip debugging emulator for details.

Table 30-2. Pin Connection

Dedicated Flash Memory Programmer				RL78/F13 and RL78/F14
Signal Name		I/O	Pin Function	Pin Name
PG-FP5, FL-PR5	E1 on-chip debugging emulator			
V_{DD}		I/O	V_{DD} voltage generation/power monitoring	V_{DD}
GND		–	Ground	V_{SS}, EV_{SS0} Note 1, EV_{SS0} Note 2, REGC Note 3
EMV_{DD}		–	Driving power for TOOL0 pin	V_{DD}, EV_{DD0} Note 1, EV_{DD1} Note 2
/RESET	–	Output	Reset signal	$\overline{RESET}$
–	$\overline{RESET}$	Output		
–	TOOL0	I/O	Transmit/receive signal	TOOL0
SI/RxD	–	I/O	Transmit/receive signal	

Notes 1. 64, 80, 100-pin products only.

2. 100-pin products only.

3. Connect REGC pin to ground via a capacitor (0.47 to 1 μF).

Caution The connection destination pins differ depending on the product. For details, see Table 30-1.

30.2 Serial Programming Using External Device (that Incorporates UART)

On-board data writing to the internal flash memory is possible by using the RL78/F13 or RL78/F14 and an external device (a microcontroller or ASIC) connected to a UART.

On the development of flash memory programmer by user, refer to the **RL78 Microcontrollers (RL78 Protocol A) Programmer Edition Application Note (R01AN0815)**.

30.2.1 Programming Environment

The environment required for writing a program to the flash memory of the RL78/F13 or RL78/F14 is illustrated below.

Figure 30-3. Environment for Writing Program to Flash Memory

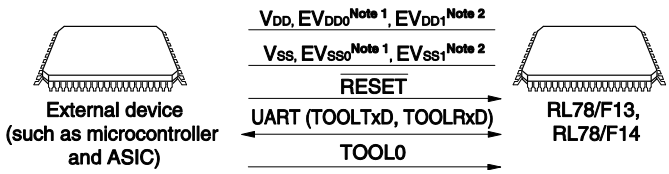

Notes 1. 64, 80, 100-pin products only.
2. 100-pin products only.

Processing to write data to or delete data from the RL78/F13 or RL78/F14 by using an external device is performed on-board. Off-board writing is not possible.

30.2.2 Communication Mode

Communication between the external device and the RL78/F13 or RL78/F14 is established by serial communication using the TOOLTxD and TOOLRxD pins via the dedicated UART of the RL78/F13 or RL78/F14.

Transfer rate: 1 M, 500 k, 250 k, 115.2 kbps

Figure 30-4. Communication with External Device

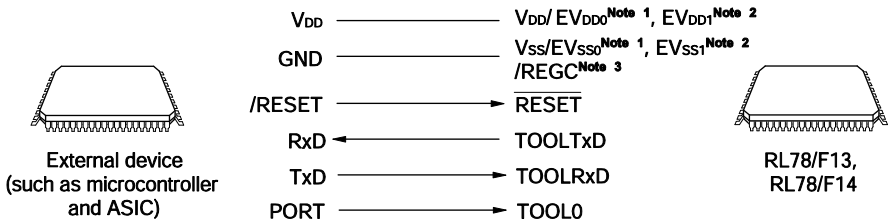

Notes 1. 64, 80, 100-pin products only.
2. 100-pin products only.
3. Connect REGC pin to ground via a capacitor (0.47 to 1 μF).

The external device generates the following signals for the RL78/F13 and RL78/F14.

Table 30-3. Pin Connection

External Device			RL78/F13 and RL78/F14
Signal Name	I/O	Pin Function	Pin Name
V_{DD}	I/O	V_{DD} voltage generation/power monitoring	V_{DD}, EV_{DD0} Note 1, EV_{DD1} Note 2
GND	–	Ground	V_{SS}, EV_{SS0} Note 1, EV_{SS1} Note 2, REGC Note 3
RESETOUT	Output	Reset signal output	$\overline{\text{RESET}}$
RxD	Input	Receive signal	TOOLTxD
TxD	Output	Transmit signal	TOOLRxD
PORT	Output	Mode signal	TOOL0

Notes 1. 64, 80, 100-pin products only.
2. 100-pin products only.
3. Connect REGC pin to ground via a capacitor (0.47 to 1 μF).

30.3 Connection of Pins on Board

To write the flash memory on-board by using the flash memory programmer, connectors that connect the dedicated flash memory programmer must be provided on the target system. First provide a function that selects the normal operation mode or flash memory programming mode on the board.

When the flash memory programming mode is set, all the pins not used for programming the flash memory are in the same status as immediately after reset. Therefore, if the external device does not recognize the state immediately after reset, the pins must be handled as described below.

Remark For flash programming mode, see **30.4.2 Flash memory programming mode**.

30.3.1 P40/TOOL0 pin

In the flash memory programming mode, connect this pin to the dedicated flash memory programmer via an external 1 kΩ pull-up resistor.

When this pin is used as the port pin, use that by the following method.

When used as an input pin: Input of low-level is prohibited for 1 ms period after the pin reset is released. However, when this pin is used via pull-down resistors, use the 500 kΩ or more resistors.

When used as an output pin: When this pin is used via pull-down resistors, use the 500 kΩ or more resistors.

<R> **Remark** The SAU and IICA pins are not used for communication between the RL78/F13 or RL78/F14 and the dedicated flash memory programmer, because single-line UART (TOOL0 pin) is used.

30.3.2 $\overline{\text{RESET}}$ pin

Signal conflict will occur if the reset signal of the dedicated flash memory programmer and external device are connected to the $\overline{\text{RESET}}$ pin that is connected to the reset signal generator on the board. To prevent this conflict, isolate the connection with the reset signal generator.

The flash memory will not be correctly programmed if the reset signal is input from the user system while the flash memory programming mode is set. Do not input any signal other than the reset signal of the dedicated flash memory programmer and external device.

Figure 30-5. Signal Conflict ($\overline{\text{RESET}}$ Pin)

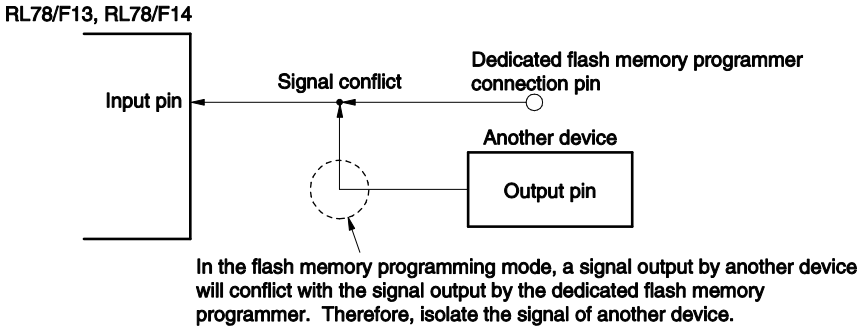

30.3.3 Port pins

When the flash memory programming mode is set, all the pins not used for flash memory programming enter the same status as that immediately after reset. If external devices connected to the ports do not recognize the port status immediately after reset, the port pin must be connected to either to V_{DD}, EV_{DD0} Note1, or EV_{DD1} Note2, or V_{SS}, EV_{SS0} Note 1, or EV_{SS1} Note 2, via a resistor.

Notes 1. 64, 80, 100-pin products only.
2. 100-pin products only.

30.3.4 REGC pin

Connect the REGC pin to GND via a capacitor (0.47 to 1 μF) in the same manner as during normal operation. Also, use a capacitor with good characteristics, since it is used to stabilize internal voltage.

30.3.5 X1 and X2 pins

Connect X1 and X2 in the same status as in the normal operation mode.

Remark In the flash memory programming mode, the high-speed on-chip oscillator clock (f_{IH}) is used.

30.3.6 Power supply

To use the supply voltage output of the flash memory programmer, connect the V_{DD} pin to V_{DD} of the flash memory programmer, and the V_{SS} pin to GND of the flash memory programmer.

To use the on-board supply voltage, connect in compliance with the normal operation mode.

However, when writing to the flash memory by using the flash memory programmer and using the on-board supply voltage, be sure to connect the V_{DD} and V_{SS} pins to V_{DD} and GND of the flash memory programmer to use the power monitor function with the flash memory programmer.

30.4 Serial Programming Method

30.4.1 Serial programming procedure

The following figure illustrates the procedure to manipulate the flash memory.

Figure 30-6. Code Flash Memory Manipulation Procedure

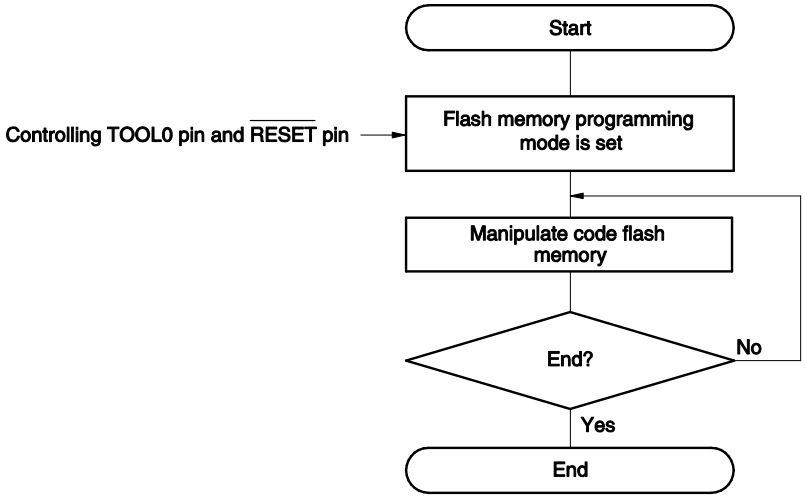

30.4.2 Flash memory programming mode

To rewrite the contents of the code flash memory through serial programming, specify the flash memory programming mode. To switch to the mode, set as follows.

<Serial programming using the dedicated flash memory programmer>

Connect the RL78/F13 and RL78/F14 to the dedicated flash memory programmer. Communication from the dedicated flash memory programmer is performed to automatically switch to the flash memory programming mode.

<Serial programming using an external device (UART communication)>

Set the TOOL0 pin to the low level, and then cancel the reset (see **Table 30-4**). Then, perform steps <1> to <4> in Figure 30-7 to enter the flash memory programming mode. For details, refer to the **RL78 Microcontrollers (RL78 Protocol A) Programmer Edition Application Note (R01AN0815)**.

Table 30-4. Relationship Between TOOL0 Pin and Operation Mode After Reset Release

TOOL0	Operation Mode
EV_{DD}	Normal operation mode
0 V	Flash memory programming mode

Figure 30-7. Setting of Flash Memory Programming Mode

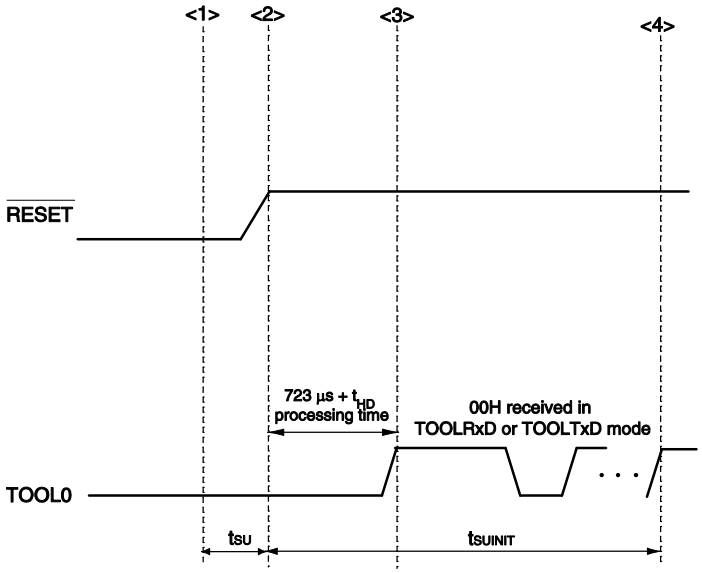

<1> The low level is input to the TOOL0 pin.

<2> The external reset ends (POR and LVD reset must end before the external reset ends.).

<3> The TOOL0 pin is set to the high level.

<4> Baud rate setting by UART reception is completed.

Remark t_{SUINIT}: The segment shows that it is necessary to finish specifying the initial communication settings within 100 ms from when the resets end.

t_{SU}: How long from when the TOOL0 pin is placed at the low level until an external reset ends

t_{HD}: How long to keep the TOOL0 pin at the low level from when the external and internal resets end (the flash firmware processing time is excluded) tHD: (min)1 ms

<R>

The voltage range in which to write, erase, or verify data in flash memory programming mode is shown in Table 30-5.

Table 30-5. Voltages at Which Data Can Be Written, Erased, or Verified

Voltages at which data can be written, erased, or verified	Operating frequency
2.7 V ≤ V_{DD} ≤ 5.5 V	1 MHz to 32 MHz

Remark For details about communication commands, see **30.4.4 Communication commands**.

30.4.3 Selecting communication mode

Communications modes of the RL78/F13 and RL78/F14 are as follows.

Table 30-6. Communication Modes

Communication Mode	Standard Setting[Note 1]				Pins Used
	Port	Speed [Note 2]	Frequency	Multiply Rate	
1-line mode (when flash memory programmer or an external device is used)	UART	115200 bps, 250000 bps, 500000 bps, 1 Mbps	–	–	TOOL0
UART0 (when external device is used)	UART	115200 bps, 250000 bps, 500000 bps, 1 Mbps	–	–	TOOLTxD, TOOLRxD

Notes 1. Selection items for Standard settings on GUI of the flash memory programmer.

2. Because factors other than the baud rate error, such as the signal waveform slew, also affect UART communication, thoroughly evaluate the slew as well as the baud rate error.

30.4.4 Communication commands

The RL78/F13 and RL78/F14 executes serial programming through the commands listed in Table 30-7.

The signals sent from the dedicated flash memory programmer or external device to the RL78/F13 or RL78/F14 are called commands, and programming functions corresponding to the commands are executed. For details, refer to the **RL78 Microcontrollers (RL78 Protocol A) Programmer Edition Application Note (R01AN0815)**.

Table 30-7. Flash Memory Control Commands

Classification	Command Name	Function
Verify	Verify	Compares the contents of a specified area of the flash memory with data transmitted from the programmer.
Erase	Block Erase	Erases a specified area in the flash memory.
Blank check	Block Blank Check	Checks if a specified block in the flash memory has been correctly erased.
Write	Programming	Writes data to a specified area in the flash memory.[Note]
Getting information	Silicon Signature	Gets information from the RL78/F13 or RL78/F14 (such as the part number, flash memory configuration, and programming firmware version).
	Checksum	Gets the checksum data for a specified area.
Security	Security Set	Sets security information.
	Security Get	Gets security information.
	Security Release	Release setting of prohibition of writing.
Others	Reset	Used to detect synchronization status of communication.
	Baud Rate Set	Sets baud rate when UART communication mode is selected.

Note Confirm that no data has been written to the write area. Because data cannot be erased after block erase is prohibited, do not write data if the data has not been erased.

Product information (such as product name and firmware version) can be obtained by executing the “Silicon Signature” command.

Table 30-8 lists and describes signature data. Table 30-9 shows examples of signature data.

Table 30-8. Signature Data List

Field name	Description	Number of transmit data
Device code	The serial number assigned to the device	3 bytes
Device name	Device name (ASCII code)	10 bytes
Code flash memory area last address	Last address of code flash memory area (Sent from lower address. Example. 00000H to 0FFFFH (64 KB) → FFH, FFH, 00H)	3 bytes
Data flash memory area last address	Last address of data flash memory area (Sent from lower address. Example. F1000H to F1FFFH (4 KB) → FFH, 1FH, 0FH)	3 bytes
Firmware version	Version information of firmware for programming (Sent from upper address. Example. From Ver. 1.23 → 01H, 02H, 03H)	3 bytes

Table 30-9. Example of Signature Data

Field name	Description	Number of transmit data	Data (hexadecimal)
Device code	RL78 protocol A	3 bytes	10 00 06
Device name	R5F10BLE	10 bytes	52 = "R" 35 = "5" 46 = "F" 31 = "1" 30 = "0" 42 = "B" 4C = "L" 45 = "E" 20 = " " 20 = “ ”
Code flash memory area last address	Code flash memory area 00000H to 0FFFFH (64 KB)	3 bytes	FF FF 00
Data flash memory area last address	Data flash memory area F1000H to F1FFFH (4 KB)	3 bytes	FF 1F 0F
Firmware version	Ver.1.23	3 bytes	01 02 03

30.5 Processing Time for Each Command when PG-FP5 Is in Use (Reference Value)

The following shows the processing time for each command (reference value) when PG-FP5 is used as a dedicated flash memory programmer.

Table 30-10. Processing Time for Each Command When PG-FP5 Is in Use (Reference Value)

PG-FP5 Command	Code Flash							
	16 KB	32 KB	48 KB	64 KB	96 KB	128 KB	192 KB	256 KB
Erase	1 s	1 s	1 s	1.5 s	1.5 s	2 s	2 s	2.5 s
Write	1.5 s	1.5 s	2 s	2.5 s	3 s	3.5 s	5 s	6 s
Verify	1.5 s	1.5 s	2 s	2 s	3 s	3.5 s	4.5 s	5.5 s
Write after erase	1.5 s	2 s	2.5 s	3 s	4 s	4.5 s	6.5 s	8 s

Remark The command processing times (reference value) shown in the table are typical values under the following conditions.
Port: TOOL0 (single-line UART)
Speed: 1,000,000 bps

30.6 Self-Programming

The RL78/F13 and RL78/F14 support self-programming functions that can be used to rewrite the code flash memory via a user program. Because this function allows a user application to rewrite the code flash memory by using the flash self-programming library, it can be used to upgrade the program in the field.

Cautions 1. The self-programming function cannot be used when the CPU operates with the subsystem/low-speed on-chip oscillator select clock.

2. To prohibit an interrupt during self-programming, in the same way as in the normal operation mode, execute the flash self-programming library in the state where the IE flag is cleared (0) by the DI instruction. To enable an interrupt, clear (0) the interrupt mask flag to accept in the state where the IE flag is set (1) by the EI instruction, and then execute the flash self-programming library.

3. The high-speed on-chip oscillator should be kept operating during self-programming. If this oscillator is stopped, start the high-speed on-chip oscillator clock by setting HIOSTOP to 0. Then, after 30 μs has elapsed, execute the flash self-programming library.

Remarks 1. For details of the self-programming function, refer to **RL78 Microcontroller Flash Self Programming Library Type01 User's Manual (R01US0050).** <R>

2. For details of the time required to execute self programming, see the notes on use that accompany the flash self-programming library tool.

Note that the self-programming function has two modes for flash memory programming mode: wide voltage mode and full-speed mode. Because RL78/F13 and RL78/F14 do not have wide voltage mode, select full-speed mode.

30.6.1 Self-programming procedure

The following figure illustrates a flow of rewriting the code flash memory by using a flash self-programming library.

Figure 30-8. Flow of Self Programming (Rewriting Flash Memory)

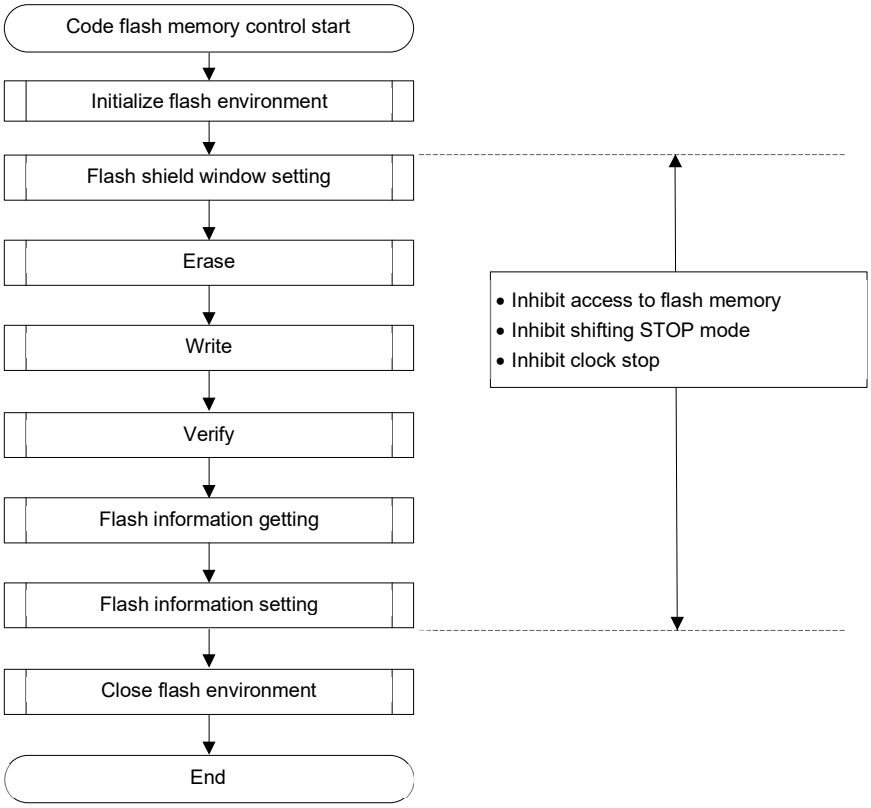

30.6.2 Boot swap function

If rewriting the boot area failed by temporary power failure or other reasons, restarting a program by resetting or overwriting is disabled due to data destruction in the boot area.

The boot swap function is used to avoid this problem.

Before erasing boot cluster 0[Note], which is a boot program area, by self-programming, write a new boot program to boot cluster 1 in advance. When the program has been correctly written to boot cluster 1, swap this boot cluster 1 and boot cluster 0 by using the set information function of the firmware of the RL78/F13 or RL78/F14, so that boot cluster 1 is used as a boot area. After that, erase or write the original area, boot cluster 0.

As a result, even if a power failure occurs while the area is being rewritten, the program is executed correctly because it is booted from boot cluster 1 to be swapped when the program is reset and started next.

Note A boot cluster is an 8 KB area and boot clusters 0 and 1 are swapped by the boot swap function.

Figure 30-9. Boot Swap Function

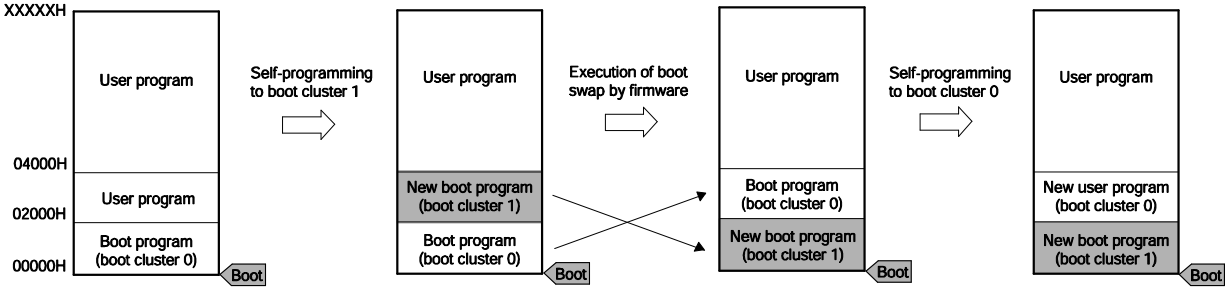

In an example of above figure, it is as follows.

Boot cluster 0: Boot program area before boot swap

Boot cluster 1: Boot program area after boot swap

Figure 30-10. Example of Executing Boot Swapping

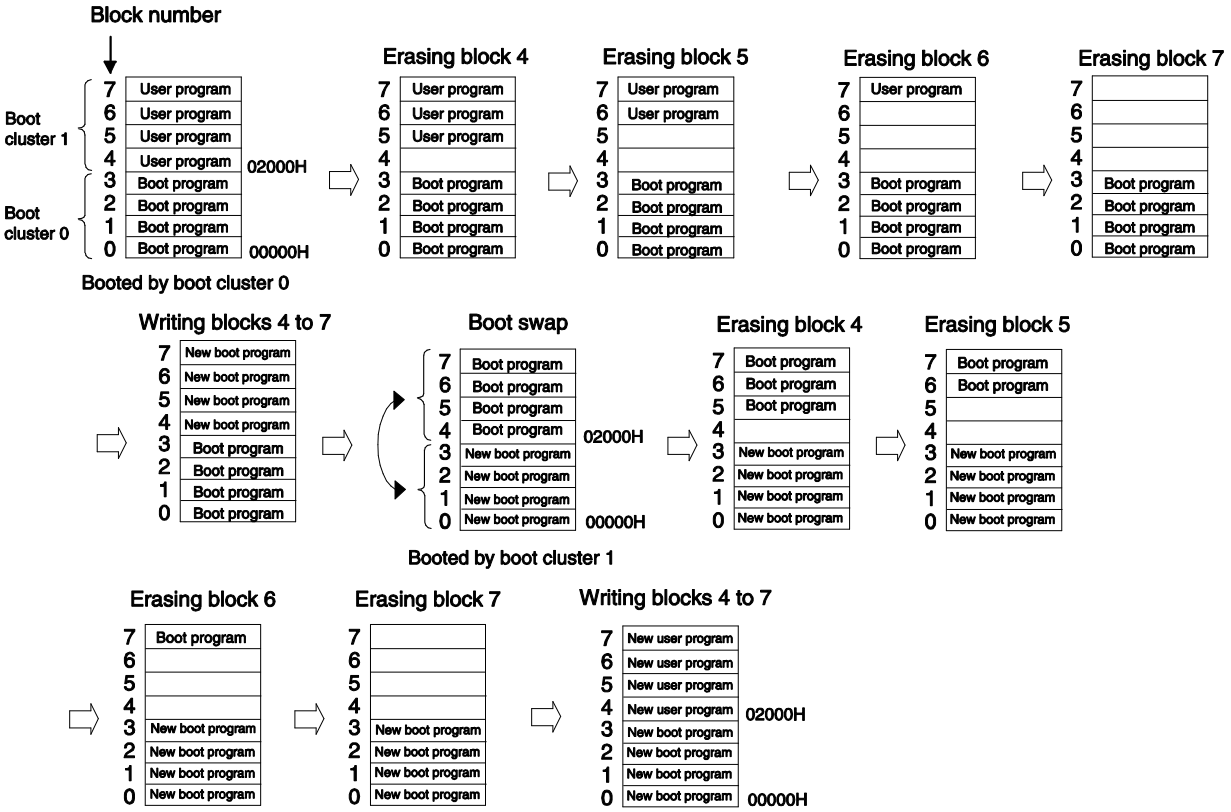

30.6.3 Flash shield window function

The flash shield window function is provided as one of the security functions for self programming. It disables writing to and erasing areas outside the range specified as a window only during self programming.

The window range can be set by specifying the start and end blocks. The window range can be set or changed during both serial programming and self-programming.

Writing to and erasing areas outside the window range are disabled during self programming. During serial programming, however, areas outside the range specified as a window can be written and erased.

Figure 30-11. Flash Shield Window Setting Example
(Target Devices: R5F10BLE, Start Block: 04H, End Block: 06H)

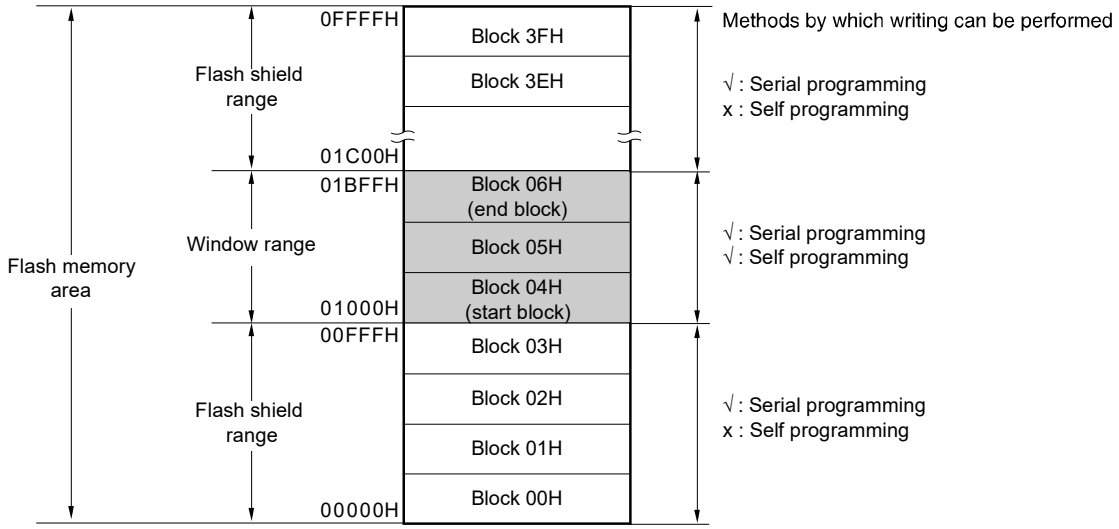

Cautions 1. If the rewrite-prohibited area of the boot cluster 0 overlaps with the flash shield window range, prohibition to rewrite the boot cluster 0 takes priority.

2. The flash shield window can only be used for the code flash memory (and is not supported for the data flash memory).

Table 30-11. Relationship between Flash Shield Window Function Setting/Change Methods and Commands

Programming conditions	Window Range Setting/Change Methods	Execution Commands	
		Block erase	Write
Self-programming	Specify the starting and ending blocks by the flash self programming library.	Block erasing is enabled only within the window range.	Writing is enabled only within the range of window range.
Serial programming	Specify the starting and ending blocks on GUI of dedicated flash memory programmer, etc.	Block erasing is enabled also outside the window range.	Writing is enabled also outside the window range.

Remark See **30.7 Security Settings** to prohibit writing or erasing during serial programming.

30.7 Security Settings

The RL78/F13 and RL78/F14 support security functions that prohibit rewriting the user program written to the internal flash memory, so that the program cannot be changed by an unauthorized person.

The operations shown below can be performed using the Security Set command.

- Disabling block erase
  Execution of the block erase command for a specific block in the flash memory is prohibited during serial programming. However, blocks can be erased by means of self programming.

- Disabling write
  <R> Execution of the write command for entire blocks in the flash memory is prohibited during serial programming. However, blocks can be written by means of self programming.
  After the setting of prohibition of writing is specified, releasing the setting by the Security Release command is enabled by a reset.

- Disabling rewriting boot cluster 0
  Execution of the block erase command and write command on boot cluster 0 (00000H to 1FFFH) in the code flash memory is prohibited by this setting.

The block erase, write commands, and rewriting boot cluster 0 are enabled by the default setting when the flash memory is shipped. Security can be set by serial programming and self programming. Each security setting can be used in combination.

Table 30-12 shows the relationship between the erase and write commands when the RL78/F13 or RL78/F14 security function is enabled.

Caution The security functions of the dedicated flash programmer does not support self-programming.

Remark To prohibit writing and erasing during self-programming, use the flash shield window function (see **30.6.3 Flash shield window function** for detail).

Table 30-12. Relationship Between Enabling Security Function and Command

(1) During serial programming

Valid Security	Executed Command	
	Block Erase	Write
Prohibition of block erase	Blocks cannot be erased.	Can be performed. Note
Prohibition of writing	Blocks can be erased.	Cannot be performed.
Prohibition of rewriting boot cluster 0	Boot cluster 0 cannot be erased.	Boot cluster 0 cannot be written.

Note Confirm that no data has been written to the write area. Because data cannot be erased after block erase is prohibited, do not write data if the data has not been erased.

(2) During self programming

Valid Security	Executed Command	
	Block Erase	Write
Prohibition of block erase	Blocks can be erased.	Can be performed.
Prohibition of writing		
Prohibition of rewriting boot cluster 0	Boot cluster 0 cannot be erased.	Boot cluster 0 cannot be written.

Remark To prohibit writing and erasing during self-programming, use the flash shield window function (see **30.6.3 Flash shield window function** for detail).

Table 30-13. Setting Security in Each Programming Mode

(1) Serial programming

Security	Security Setting	How to Disable Security Setting
Prohibition of block erase	Set via GUI of dedicated flash memory programmer, etc.	Cannot be disabled after set.
Prohibition of writing		Set via GUI of dedicated flash memory programmer, etc.
Prohibition of rewriting boot cluster 0		Cannot be disabled after set.

Caution Releasing the setting of prohibition of writing is enabled only when the security is not set as the block erase prohibition and the boot cluster 0 rewrite prohibition with code flash memory area and data flash memory area being blanks.

(2) Self programming

Security	Security Setting	How to Disable Security Setting
Prohibition of block erase	Set by using flash self programming library.	Cannot be disabled after set.
Prohibition of writing		Cannot be disabled during self-programming. (Set via GUI of dedicated flash memory programmer, etc. during serial programming.)
Prohibition of rewriting boot cluster 0		Cannot be disabled after set.

30.8 Data Flash

30.8.1 Data flash overview

An overview of the data flash memory is provided below.

- The data flash memory can be rewritten by a user program using the data flash library. For details, refer to the **RL78 Family Microcontroller Data Flash Library User's Manual**.
- The data flash memory can also be rewritten by serial programming using a dedicated flash memory programmer or an external device.
- Blocks in the data flash memory can be erased in 1-KB units.
- The data flash memory can be accessed only in 8-bit units.
- The data flash memory can be directly read by CPU instructions.
- Instructions can be executed from the code flash memory while rewriting the data flash memory (back ground operation (BGO) is supported).
- Because the data flash memory is an area exclusively used for data, executing instructions from the data flash memory is prohibited.
- Accessing the data flash memory is prohibited while rewriting the code flash memory (during self-programming)
- Manipulating the DFLCTL register is prohibited while rewriting the data flash memory.
- Transition to the STOP status is prohibited while rewriting the data flash memory.
- The data flash memory can be programmed by using a Renesas library while other programs are running.

Cautions 1. The data flash memory is stopped after a reset is released. To use the data flash memory, the data flash control register (DFLCTL) must be set up.

2. The high-speed on-chip oscillator must be running while rewriting the data flash memory. If this oscillator is stopped, start the high-speed on-chip oscillator clock by setting HIOSTOP to 0. Then, after 30 μs has elapsed, execute the data flash library.

Remark For details about rewriting the code flash memory by using a user program, see **30.6 Self-Programming**.

30.8.2 Register controlling data flash memory

30.8.2.1 Data flash control register (DFLCTL)

This register is used to enable or disable accessing to the data flash.

The DFLCTL register is set by a 1-bit or 8-bit memory manipulation instruction.

Reset input sets this register to 00H.

Figure 30-12. Format of Data Flash Control Register (DFLCTL)

Address: F0090H After reset: 00H R/W

Symbol	7	6	5	4	3	2	1	<0>
DFLCTL	0	0	0	0	0	0	0	DFLEN

DFLEN	Data flash access control
0	Disables data flash access
1	Enables data flash access

Caution Manipulating the DFLCTL register is not possible while rewriting the data flash memory.

30.8.3 Procedure for accessing data flash memory

The data flash memory is stopped after a reset is released. To access the data flash memory, initial settings must be specified as described below.

After the initial settings are specified, the data flash memory can be read by CPU instructions and can be read or rewritten by using a data flash library.

<1> Set 1 to bit 0 (DFLEN) of the data flash control register (DFLCTL).
<2> Use a software timer to wait for the setup to finish.
Setup time: 5 μs
<3> After the wait, the data flash memory can be accessed.

Cautions 1. Accessing the data flash memory is prohibited during the setup time.

2. Transition to the STOP mode is not possible during the setup time. To enter the STOP mode during the setup time, clear DFLEN to 0 and then execute the STOP instruction.

3. The high-speed on-chip oscillator should be kept operating during data flash rewrite. If it is kept stopping, the high-speed on-chip oscillator clock should be operated (HIOSTOP = 0). The data flash library should be executed after 30 μs have elapsed.

<R> **4. If accessing data flash memory when the f_{SL} (subsystem clock or slow on-chip oscillator) is selected as f_{CLK} (CPU/peripheral hardware clock), take one of the following procedures.:**

i) To switch f_{CLK} from f_{SL} to the main system clock, follow these steps (1) to (3).

(1) Confirming the complete switching to main system clock (CLS* = 0).

(2) Read any data flash memory address as a dummy read (don't use the read value).

(3) Waiting until the following time has passed: 5 μs

***: Bit of the system clock control register (CKC)**

ii) Do not read data flash memory when f_{SL} is selected as f_{CLK}.

If data flash content needs to be accessed during f_{SL} is selected as f_{CLK}, store the required data flash content to RAM before setting f_{SL} to f_{CLK}. And read copied content from RAM.

CHAPTER 31 ON-CHIP DEBUG FUNCTION

31.1 Overview of On-chip Debug Function

The RL78/F13 and RL78/F14 have stronger on-chip debug functions than the conventional RL78 family microcontrollers.

The following three functions are stronger. For points requiring cautions in using these functions, refer to E1/E20 Emulator User's Manual (R20UT0398).

- Hot plug-in
- Real-time RAM monitor (RRM) and dynamic memory modification (DMM) by the DTC
- On-chip trace

31.1.1 Hot Plug-in

This function is for connecting the MCU with an emulator without stopping or resetting a user program which is in execution. This function uses RAM in some products.

31.1.2 Real-time RAM Monitor (RRM) and Dynamic Memory Modification (DMM) by DTC

These functions are for accessing the MCU memory during the execution of the user program after the connection between the MCU and emulator.

The CPU handles all access to memory in the conventional RL78 family microcontrollers. The RL78/F13 and RL78/F14 allow access to memory without using the CPU because they have a DTC for debugging.

These functions use RAM in some products.

Figure 31-1 shows the configuration of RRM and DMM by the DTC.

Figure 31-1. Configuration of RRM and DMM by DTC

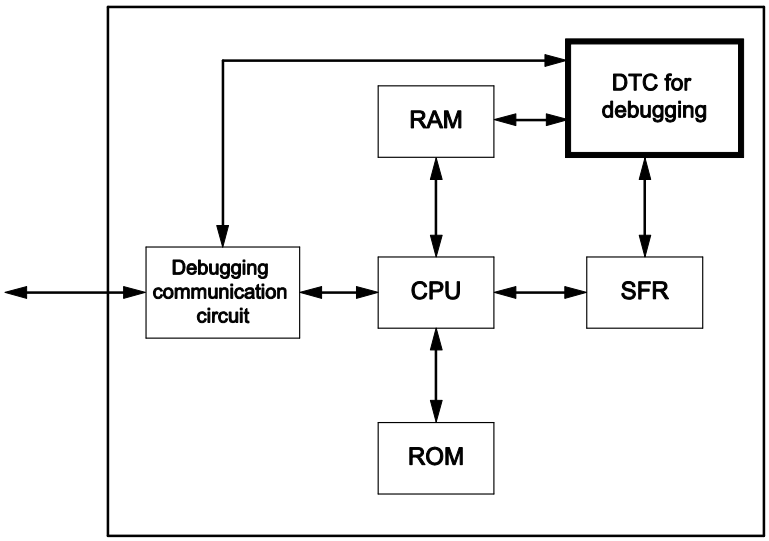

31.1.3 On-chip Trace

This function is for retaining the program counter values of branch sources when branches occur.

This function can retain the values of branches due to the execution of branch instructions, interrupts, and resets. This function uses RAM to retain traces in some products.

The RAM area used and the number of branches retained by the on-chip trace vary with the product.

Table 31-1 shows the RAM area used and the number of branches retained by on-chip trace.

Table 31-1. RAM Area Used and Number of Branches Retained by On-chip Trace

Series Name	Products	RAM	RAM Area Used	Number of Branches
RL78/F13 (LIN incorporated)	R5F10A6A, R5F10AAA, R5F10ABA, R5F10AGA	1 KB	–	64
	R5F10A6C, R5F10AAC, R5F10ABC, R5F10AGC, R5F10ALC	2 KB		
	R5F10A6D, R5F10AAD, R5F10ABD, R5F10AGD, R5F10ALD	3 KB	• 0FF400H-0FF42FH (Hot plug-in/RRM and DDM by DTC) • 0FF300H-0FF37FH (On-chip trace)	
	R5F10A6E, R5F10AAE, R5F10ABE, R5F10AGE, R5F10ALE	4 KB		
	R5F10AME	4 KB	–	128
	R5F10AGF, R5F10ALF, R5F10AMF	6 KB		
	R5F10AGG, R5F10ALG, R5F10AMG	8 KB	• 0FE500H-0FE52FH (Hot plug-in/RRM and DDM by DTC) • 0FE300H-0FE4FFH (On-chip trace)	
RL78/F13 (CAN and LIN incorporated)	R5F10BAC, R5F10BBC, R5F10BGC, R5F10BLC	2 KB	–	
	R5F10BAD, R5F10BBD, R5F10BGD, R5F10BLD	3 KB		
	R5F10BAE, R5F10BBE, R5F10BGE, R5F10BLE, R5F10BME	4 KB		
	R5F10BAF, R5F10BBF, R5F10BGF, R5F10BLF, R5F10BMF	6 KB		
	R5F10BAG, R5F10BBG, R5F10BGG, R5F10BLG, R5F10BMG	8 KB	• 0FE500H-0FE52FH (Hot plug-in/RRM and DDM by DTC) • 0FE300H-0FE4FFH (On-chip trace)	
RL78/F14	R5F10PAD, R5F10PBD, R5F10PGD	4 KB	–	
	R5F10PAE, R5F10PBE, R5F10PGE, R5F10PLE, R5F10PME	6 KB		
	R5F10PPE	6 KB		
	R5F10PGF, R5F10PLF, R5F10PMF	8 KB	• 0FE500H-0FE52FH (Hot plug-in/RRM and DDM by DTC) • 0FE300H-0FE4FFH (On-chip trace)	
	R5F10PPF	8 KB	–	
	R5F10PGG, R5F10PLG, R5F10PMG, R5F10PPG	10 KB		
	R5F10PGH, R5F10PLH, R5F10PMH, R5F10PPH	16 KB		
	R5F10PGJ, R5F10PLJ, R5F10PMJ, R5F10PPJ	20 KB	• 0FB500H-0FB52FH (Hot plug-in/RRM and DDM by DTC) • 0FB300H-0FB4FFH (On-chip trace)	

31.2 Connecting E1 On-chip Debugging Emulator to RL78/F13 or RL78/F14

The RL78/F13 and RL78/F14 use the V_{DD}, EV_{DD0}, $\overline{RESET}$, TOOL0, and V_{SS} pins to communicate with the host machine via an E1 on-chip debugging emulator. Serial communication is performed by using a single-line UART that uses the TOOL0 pin.

The RL78/F13 and RL78/F14 are provided with the hot plug-in detection function.

Caution The RL78/F13 and RL78/F14 have an on-chip debug function, which is provided for development and evaluation. Do not use the on-chip debug function in products designated for mass production, because the guaranteed number of rewritable times of the flash memory may be exceeded when this function is used, and product reliability therefore cannot be guaranteed. Renesas Electronics is not liable for problems occurring when the on-chip debug function is used.

Figure 31-2. Connection Example of E1 On-chip Debugging Emulator and RL78/F13 or RL78/F14

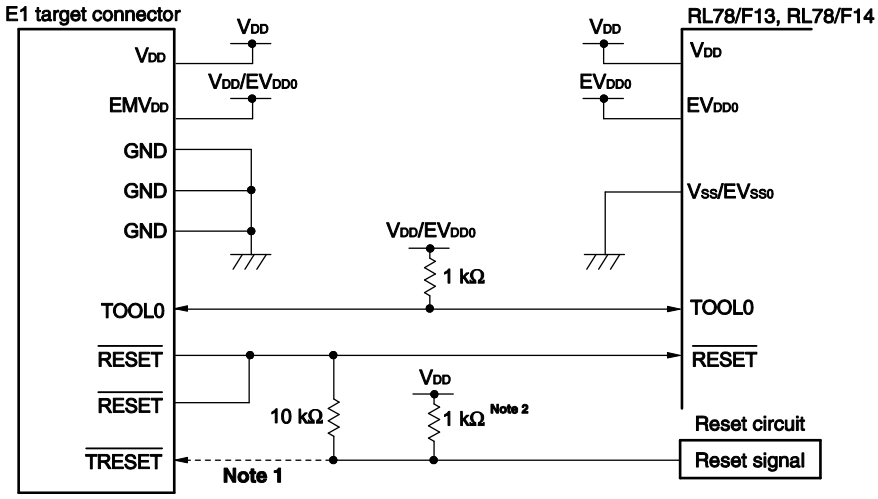

Notes 1. Connecting the dotted line is not necessary during flash programming.

2. If the reset circuit on the target system does not have a buffer and generates a reset signal only with resistors and capacitors, this pull-up resistor is not necessary.

Caution This circuit diagram is assumed that the reset signal outputs from an N-ch O.D. buffer (output resistor: 100 Ω or less)

31.3 On-Chip Debug Security ID

The RL78/F13 and RL78/F14 have an on-chip debug operation control bit in the flash memory at 000C3H (see **CHAPTER 29 OPTION BYTE**) and an on-chip debug security ID setting area at 000C4H to 000CDH, to prevent third parties from reading memory content.

When the boot swap function is used, also set a value that is the same as that of 020C3H and 020C4H to 020CDH in advance, because 000C3H, 000C4H to 000CDH and 020C3H, and 020C4H to 020CDH are switched.

Table 31-2. On-Chip Debug Security ID

Address	On-Chip Debug Security ID
000C4H to 000CDH	Any ID code of 10 bytes (except for All FFH)
020C4H to 020CDH	

31.4 Securing of User Resources

To perform communication between the RL78/F13 or RL78/F14 and E1 on-chip debugging emulator, as well as each debug function, the securing of memory space must be done beforehand.

If Renesas Electronics assembler or compiler is used, the items can be set by using linker options.

31.4.1 Securement of memory space

The shaded portions in Figure 31-3 are the areas reserved for placing the debug monitor program, so user programs or data cannot be allocated in these spaces. When using the on-chip debug function, these spaces must be secured so as not to be used by the user program. Moreover, this area must not be rewritten by the user program.

Figure 31-3. Memory Spaces Where Debug Monitor Programs Are Allocated

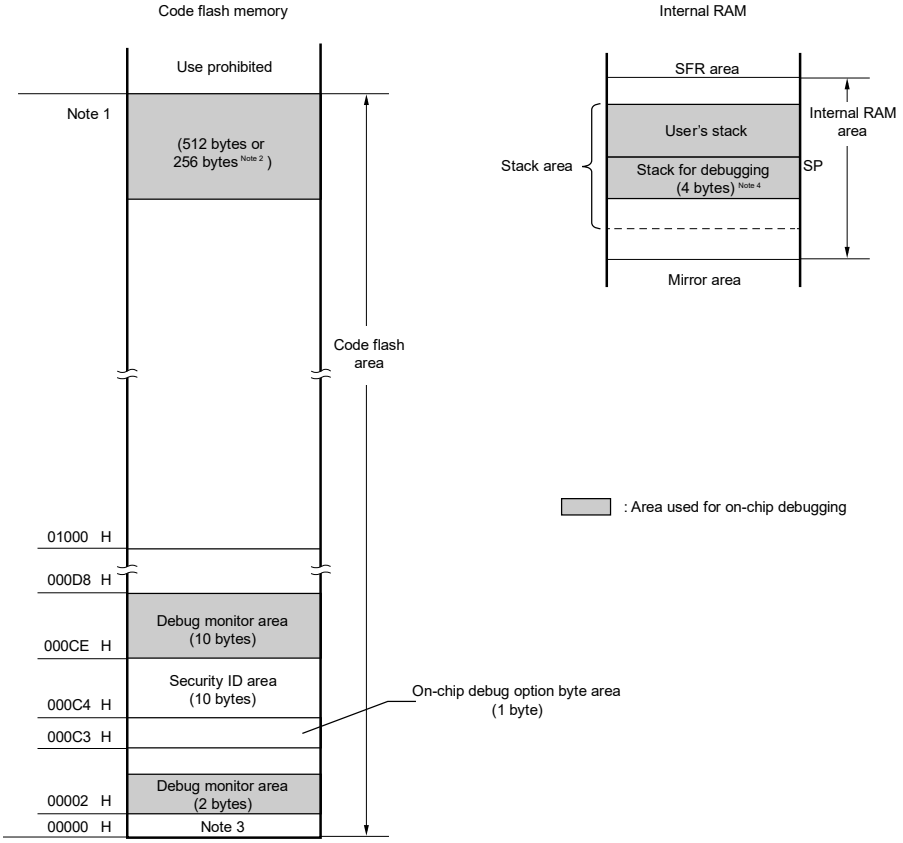

Notes 1. Address differs depending on products as follows.

Products (code flash memory capacity)	Address of **Note 1**
R5F10AxA (x = 6, A, B, G)	03FFFH
R5F10AxC (x = 6, A, B, G, L)	07FFFH
R5F10AxD (x = 6, A, B, G, L)	0BFFFH
R5F10AxE (x = 6, A, B, G, L, M)	0FFFFH
R5F10AxF (x = G, L, M)	17FFFH
R5F10AxG (x = G, L, M)	1FFFFH
R5F10BxC (x = A, B, G, L)	07FFFH
R5F10BxD (x = A, B, G, L)	0BFFFH
R5F10BxE (x = A, B, G, L, M)	0FFFFH
R5F10BxF (x = A, B, G, L, M)	17FFFH
R5F10BxG (x = A, B, G, L, M)	1FFFFH
R5F10PxD (x = A, B, G)	0BFFFH
R5F10PxE (x = A, B, G, L, M, P)	0FFFFH
R5F10PxF (x = G, L, M, P)	17FFFH
R5F10PxG (x = G, L, M, P)	1FFFFH
R5F10PxH (x = G, L, M, P)	2FFFFH
R5F10PxJ (x = G, L, M, P)	3FFFFH

2. When real-time RAM monitor (RRM) function and dynamic memory modification (DMM) function are not used, it is 256 bytes.

3. In debugging, reset vector is rewritten to address allocated to a monitor program.

4. Since this area is allocated just under the stack area, the address of this area varies depending on the stack increase and decrease. That is, 4 extra bytes are consumed for the stack area used.
When using self-programming, 12 extra bytes are consumed for the stack area used.

CHAPTER 32 BCD CORRECTION CIRCUIT

32.1 BCD Correction Circuit Function

The result of addition/subtraction of the BCD (binary-coded decimal) code and BCD code can be obtained as BCD code with this circuit.

The decimal correction operation result is obtained by performing addition/subtraction having the A register as the operand and then adding/ subtracting the BCD correction result register (BCDADJ).

32.2 Registers Used by BCD Correction Circuit

The BCD correction circuit uses the following registers.

- BCD correction result register (BCDADJ)

(1) BCD correction result register (BCDADJ)

The BCDADJ register stores correction values for obtaining the add/subtract result as BCD code through add/subtract instructions using the A register as the operand.

The value read from the BCDADJ register varies depending on the value of the A register when it is read and those of the CY and AC flags.

The BCDADJ register is read by an 8-bit memory manipulation instruction.

Reset input sets this register to undefined.

Figure 32-1. Format of BCD Correction Result Register (BCDADJ)

Address: F00FEH After reset: undefined R

Symbol	7	6	5	4	3	2	1	0
BCDADJ								

32.3 BCD Correction Circuit Operation

The basic operation of the BCD correction circuit is as follows.

(1) Addition: Calculating the result of adding a BCD code value and another BCD code value by using a BCD code value

<1> The BCD code value to which addition is performed is stored in the A register.

<2> By adding the value of the A register and the second operand (value of one more BCD code to be added) as are in binary, the binary operation result is stored in the A register and the correction value is stored in the BCD correction result register (BCDADJ).

<3> Decimal correction is performed by adding in binary the value of the A register (addition result in binary) and the BCDADJ register (correction value), and the correction result is stored in the A register and CY flag.

Caution The value read from the BCDADJ register varies depending on the value of the A register when it is read and those of the CY and AC flags. Therefore, execute the instruction <3> after the instruction <2> instead of executing any other instructions. To perform BCD correction in the interrupt enabled state, saving and restoring the A register is required within the interrupt function. PSW (CY flag and AC flag) is restored by the RETI instruction.

An example is shown below.

Examples 1: 99 + 89 = 188

Instruction	A Register	CY Flag	AC Flag	BCDADJ Register
`MOV A, #99H ; <1>`	99H	–	–	–
`ADD A, #89H ; <2>`	22H	1	1	66H
`ADD A, !BCDADJ ; <3>`	88H	1	0	–

Examples 2: 85 + 15 = 100

Instruction	A Register	CY Flag	AC Flag	BCDADJ Register
`MOV A, #85H ; <1>`	85H	–	–	–
`ADD A, #15H ; <2>`	9AH	0	0	66H
`ADD A, !BCDADJ ; <3>`	00H	1	1	–

Examples 3: 80 + 80 = 160

Instruction	A Register	CY Flag	AC Flag	BCDADJ Register
`MOV A, #80H ; <1>`	80H	–	–	–
`ADD A, #80H ; <2>`	00H	1	0	60H
`ADD A, !BCDADJ ; <3>`	60H	1	0	–

(2) Subtraction: Calculating the result of subtracting a BCD code value from another BCD code value by using a BCD code value

<1> The BCD code value from which subtraction is performed is stored in the A register.

<2> By subtracting the value of the second operand (value of BCD code to be subtracted) from the A register as is in binary, the calculation result in binary is stored in the A register, and the correction value is stored in the BCD correction result register (BCDADJ).

<3> Decimal correction is performed by subtracting the value of the BCDADJ register (correction value) from the A register (subtraction result in binary) in binary, and the correction result is stored in the A register and CY flag.

Caution The value read from the BCDADJ register varies depending on the value of the A register when it is read and those of the CY and AC flags. Therefore, execute the instruction <3> after the instruction <2> instead of executing any other instructions. To perform BCD correction in the interrupt enabled state, saving and restoring the A register is required within the interrupt function. PSW (CY flag and AC flag) is restored by the RETI instruction.

An example is shown below.

Example: 91 − 52 = 39

Instruction	A Register	CY Flag	AC Flag	BCDADJ Register
`MOV A, #91H ; <1>`	91H	−	−	−
`SUB A, #52H ; <2>`	3FH	0	1	06H
`SUB A, !BCDADJ ; <3>`	39H	0	0	−

CHAPTER 33 INSTRUCTION SET

This chapter lists the instructions in the RL78 microcontroller instruction set. For details of each operation and operation code, refer to the separate document **RL78 Family User's Manual Software**.

33.1 Conventions Used in Operation List

33.1.1 Operand identifiers and specification methods

Operands are described in the “Operand” column of each instruction in accordance with the description method of the instruction operand identifier (refer to the assembler specifications for details). When there are two or more description methods, select one of them. Alphabetic letters in capitals and the symbols, #, !, !!, $, $!, [ ], and ES: are keywords and are described as they are. Each symbol has the following meaning.

- #: Immediate data specification
- !: 16-bit absolute address specification
- !!: 20-bit absolute address specification
- $: 8-bit relative address specification
- $!: 16-bit relative address specification
- [ ]: Indirect address specification
- ES:: Extension address specification

In the case of immediate data, describe an appropriate numeric value or a label. When using a label, be sure to describe the #, !, !!, $, $!, [ ], and ES: symbols.

For operand register identifiers, r and rp, either function names (X, A, C, etc.) or absolute names (names in parentheses in the table below, R0, R1, R2, etc.) can be used for description.

Table 33-1. Operand Identifiers and Specification Methods

Identifier	Description Method
r	X (R0), A (R1), C (R2), B (R3), E (R4), D (R5), L (R6), H (R7)
rp	AX (RP0), BC (RP1), DE (RP2), HL (RP3)
sfr	Special-function register symbol (SFR symbol) FFF00H to FFFFFH
sfrp	Special-function register symbols (16-bit manipulatable SFR symbol. Even addresses only[Note]) FFF00H to FFFFFH
saddr	FFE20H to FFF1FH Immediate data or labels
<R> saddrp	FFE20H to FFF1FH Immediate data or labels (even addresses only[Note])
addr20	00000H to FFFFFH Immediate data or labels
addr16	0000H to FFFFH Immediate data or labels (only even addresses for 16-bit data transfer instructions[Note])
addr5	0080H to 00BFH Immediate data or labels (even addresses only)
word	16-bit immediate data or label
byte	8-bit immediate data or label
bit	3-bit immediate data or label
RBn	RB0 to RB3

Note Bit 0 = 0 when an odd address is specified.

Remark The special function registers can be described to operand sfr as symbols. See **Table 3-5 SFR List** for the symbols of the special function registers. The extended special function registers can be described to operand !addr16 as symbols. See **Table 3-6 Extended SFR (2nd SFR) List** for the symbols of the extended special function registers.

33.1.2 Description of operation column

The operation when the instruction is executed is shown in the “Operation” column using the following symbols.

Table 33-2. Symbols in “Operation” Column

Symbol	Function
A	A register; 8-bit accumulator
X	X register
B	B register
C	C register
D	D register
E	E register
H	H register
L	L register
ES	ES register
CS	CS register
AX	AX register pair; 16-bit accumulator
BC	BC register pair
DE	DE register pair
HL	HL register pair
PC	Program counter
SP	Stack pointer
PSW	Program status word
CY	Carry flag
AC	Auxiliary carry flag
Z	Zero flag
RBS	Register bank select flag
IE	Interrupt request enable flag
()	Memory contents indicated by address or register contents in parentheses
X_H, X_L X_S, X_H, X_L	16-bit registers: X_H = higher 8 bits, X_L = lower 8 bits 20-bit registers: X_S = (bits 19 to 16), X_H = (bits 15 to 8), X_L = (bits 7 to 0)
∧	Logical product (AND)
∨	Logical sum (OR)
∨̸	Exclusive logical sum (exclusive OR)
¯	Inverted data
addr5	16-bit immediate data (even addresses only in 0080H to 00BFH)
addr16	16-bit immediate data
addr20	20-bit immediate data
jdisp8	Signed 8-bit data (displacement value)
jdisp16	Signed 16-bit data (displacement value)

33.1.3 Description of flag operation column

The change of the flag value when the instruction is executed is shown in the “Flag” column using the following symbols.

Table 33-3. Symbols in “Flag” Column

Symbol	Change of Flag Value
(Blank)	Unchanged
0	Cleared to 0
1	Set to 1
×	Set/cleared according to the result
R	Previously saved value is restored

33.1.4 PREFIX instruction

Instructions with “ES:” have a PREFIX operation code as a prefix to extend the accessible data area to the 1 MB space (00000H to FFFFFH), by adding the ES register value to the 64 KB space from F0000H to FFFFFH. When a PREFIX operation code is attached as a prefix to the target instruction, only one instruction immediately after the PREFIX operation code is executed as the addresses with the ES register value added.

A interrupt and DTC transfer are not acknowledged between a PREFIX instruction code and the instruction immediately after.

Table 33-4. Use Example of PREFIX Operation Code

Instruction	Opcode				
	1	2	3	4	5
MOV !addr16, #byte	CFH	!addr16		#byte	–
MOV ES:!addr16, #byte	11H	CFH	!addr16		#byte
MOV A, [HL]	8BH	–	–	–	–
MOV A, ES:[HL]	11H	8BH	–	–	–

Caution Set the ES register value with MOV ES, A, etc., before executing the PREFIX instruction.

33.2 Operation List

Table 33-5. Operation List (1/18)

<R>

Instruction Group	Mnemonic	Operands	Bytes	Clocks		Operation	Flag		
				Note 1	Note 2		Z	AC	CY
8-bit data transfer	MOV	r, #byte	2	1	–	r ← byte			
		PSW, #byte	3	3	–	PSW ← byte	×	×	×
		CS, #byte	3	1	–	CS ← byte			
		ES, #byte	2	1	–	ES ← byte			
		!addr16, #byte	4	1	–	(addr16) ← byte			
		ES:!addr16, #byte	5	2	–	(ES, addr16) ← byte			
		saddr, #byte	3	1	–	(saddr) ← byte			
		sfr, #byte	3	1	–	sfr ← byte			
		[DE+byte], #byte	3	1	–	(DE+byte) ← byte			
		ES:[DE+byte],#byte	4	2	–	((ES, DE)+byte) ← byte			
		[HL+byte], #byte	3	1	–	(HL+byte) ← byte			
		ES:[HL+byte],#byte	4	2	–	((ES, HL)+byte) ← byte			
		[SP+byte], #byte	3	1	–	(SP+byte) ← byte			
		word[B], #byte	4	1	–	(B+word) ← byte			
		ES:word[B], #byte	5	2	–	((ES, B)+word) ← byte			
		word[C], #byte	4	1	–	(C+word) ← byte			
		ES:word[C], #byte	5	2	–	((ES, C)+word) ← byte			
		word[BC], #byte	4	1	–	(BC+word) ← byte			
		ES:word[BC], #byte	5	2	–	((ES, BC)+word) ← byte			
		A, r Note 3	1	1	–	A ← r			
		r, A Note 3	1	1	–	r ← A			
		A, PSW	2	1	–	A ← PSW			
		PSW, A	2	3	–	PSW ← A	×	×	×
		A, CS	2	1	–	A ← CS			
		CS, A	2	1	–	CS ← A			
		A, ES	2	1	–	A ← ES			
		ES, A	2	1	–	ES ← A			
		A, !addr16	3	1	4	A ← (addr16)			
		A, ES:!addr16	4	2	5	A ← (ES, addr16)			
		!addr16, A	3	1	–	(addr16) ← A			
		ES:!addr16, A	4	2	–	(ES, addr16) ← A			
		A, saddr	2	1	–	A ← (saddr)			
		saddr, A	2	1	–	(saddr) ← A			

Notes 1. Number of CPU clocks (f_{CLK}) when the internal RAM area, SFR area, or extended SFR area is accessed, or when no data is accessed.

2. Number of CPU clocks (f_{CLK}) when the program memory area is accessed.

3. Except r = A

Remark Number of clock is when program exists in the internal ROM (flash memory) area. If fetching the instruction from the internal RAM area, the number becomes double number plus 3 clocks at a maximum.

Table 33-5. Operation List (2/18)

<R>

Instruction Group	Mnemonic	Operands	Bytes	Clocks		Operation	Flag
				Note 1	Note 2		Z AC CY
8-bit data transfer	MOV	A, sfr	2	1	–	A ← sfr	
		sfr, A	2	1	–	sfr ← A	
		A, [DE]	1	1	4	A ← (DE)	
		[DE], A	1	1	–	(DE) ← A	
		A, ES:[DE]	2	2	5	A ← (ES, DE)	
		ES:[DE], A	2	2	–	(ES, DE) ← A	
		A, [HL]	1	1	4	A ← (HL)	
		[HL], A	1	1	–	(HL) ← A	
		A, ES:[HL]	2	2	5	A ← (ES, HL)	
		ES:[HL], A	2	2	–	(ES, HL) ← A	
		A, [DE+byte]	2	1	4	A ← (DE + byte)	
		[DE+byte], A	2	1	–	(DE + byte) ← A	
		A, ES:[DE+byte]	3	2	5	A ← ((ES, DE) + byte)	
		ES:[DE+byte], A	3	2	–	((ES, DE) + byte) ← A	
		A, [HL+byte]	2	1	4	A ← (HL + byte)	
		[HL+byte], A	2	1	–	(HL + byte) ← A	
		A, ES:[HL+byte]	3	2	5	A ← ((ES, HL) + byte)	
		ES:[HL+byte], A	3	2	–	((ES, HL) + byte) ← A	
		A, [SP+byte]	2	1	–	A ← (SP + byte)	
		[SP+byte], A	2	1	–	(SP + byte) ← A	
		A, word[B]	3	1	4	A ← (B + word)	
		word[B], A	3	1	–	(B + word) ← A	
		A, ES:word[B]	4	2	5	A ← ((ES, B) + word)	
		ES:word[B], A	4	2	–	((ES, B) + word) ← A	
		A, word[C]	3	1	4	A ← (C + word)	
		word[C], A	3	1	–	(C + word) ← A	
		A, ES:word[C]	4	2	5	A ← ((ES, C) + word)	
		ES:word[C], A	4	2	–	((ES, C) + word) ← A	
		A, word[BC]	3	1	4	A ← (BC + word)	
		word[BC], A	3	1	–	(BC + word) ← A	
		A, ES:word[BC]	4	2	5	A ← ((ES, BC) + word)	
		ES:word[BC], A	4	2	–	((ES, BC) + word) ← A	

Notes 1. Number of CPU clocks (f_{CLK}) when the internal RAM area, SFR area, or extended SFR area is accessed, or when no data is accessed.

2. Number of CPU clocks (f_{CLK}) when the program memory area is accessed.

Remark Number of clock is when program exists in the internal ROM (flash memory) area. If fetching the instruction from the internal RAM area, the number becomes double number plus 3 clocks at a maximum.

Table 33-5. Operation List (3/18)

<R>

Instruction Group	Mnemonic	Operands	Bytes	Clocks		Operation	Flag
				Note 1	Note 2		Z AC CY
8-bit data transfer	MOV	A, [HL+B]	2	1	4	A ← (HL + B)	
		[HL+B], A	2	1	–	(HL + B) ← A	
		A, ES:[HL+B]	3	2	5	A ← ((ES, HL) + B)	
		ES:[HL+B], A	3	2	–	((ES, HL) + B) ← A	
		A, [HL+C]	2	1	4	A ← (HL + C)	
		[HL+C], A	2	1	–	(HL + C) ← A	
		A, ES:[HL+C]	3	2	5	A ← ((ES, HL) + C)	
		ES:[HL+C], A	3	2	–	((ES, HL) + C) ← A	
		X, !addr16	3	1	4	X ← (addr16)	
		X, ES:!addr16	4	2	5	X ← (ES, addr16)	
		X, saddr	2	1	–	X ← (saddr)	
		B, !addr16	3	1	4	B ← (addr16)	
		B, ES:!addr16	4	2	5	B ← (ES, addr16)	
		B, saddr	2	1	–	B ← (saddr)	
		C, !addr16	3	1	4	C ← (addr16)	
		C, ES:!addr16	4	2	5	C ← (ES, addr16)	
		C, saddr	2	1	–	C ← (saddr)	
		ES, saddr	3	1	–	ES ← (saddr)	
	XCH	A, r Note 3	1 (r = X) 2 (other than r = X)	1	–	A ←→ r	
		A, !addr16	4	2	–	A ←→ (addr16)	
		A, ES:!addr16	5	3	–	A ←→ (ES, addr16)	
		A, saddr	3	2	–	A ←→ (saddr)	
		A, sfr	3	2	–	A ←→ sfr	
		A, [DE]	2	2	–	A ←→ (DE)	
		A, ES:[DE]	3	3	–	A ←→ (ES, DE)	
		A, [HL]	2	2	–	A ←→ (HL)	
		A, ES:[HL]	3	3	–	A ←→ (ES, HL)	
		A, [DE+byte]	3	2	–	A ←→ (DE + byte)	
		A, ES:[DE+byte]	4	3	–	A ←→ ((ES, DE) + byte)	
		A, [HL+byte]	3	2	–	A ←→ (HL + byte)	
		A, ES:[HL+byte]	4	3	–	A ←→ ((ES, HL) + byte)	

Notes 1. Number of CPU clocks (f_{CLK}) when the internal RAM area, SFR area, or extended SFR area is accessed, or when no data is accessed.

2. Number of CPU clocks (f_{CLK}) when the program memory area is accessed.

3. Except r = A

Remark Number of clock is when program exists in the internal ROM (flash memory) area. If fetching the instruction from the internal RAM area, the number becomes double number plus 3 clocks at a maximum.

Table 33-5. Operation List (4/18)

<R>

Instruction Group	Mnemonic	Operands	Bytes	Clocks		Operation	Flag		
				Note 1	Note 2		Z	AC	CY
8-bit data transfer	XCH	A, [HL+B]	2	2	–	A ←→ (HL+B)			
		A, ES:[HL+B]	3	3	–	A ←→ ((ES, HL)+B)			
		A, [HL+C]	2	2	–	A ←→ (HL+C)			
		A, ES:[HL+C]	3	3	–	A ←→ ((ES, HL)+C)			
	ONEB	A	1	1	–	A ← 01H			
		X	1	1	–	X ← 01H			
		B	1	1	–	B ← 01H			
		C	1	1	–	C ← 01H			
		!addr16	3	1	–	(addr16) ← 01H			
		ES:!addr16	4	2	–	(ES, addr16) ← 01H			
		saddr	2	1	–	(saddr) ← 01H			
	CLRB	A	1	1	–	A ← 00H			
		X	1	1	–	X ← 00H			
		B	1	1	–	B ← 00H			
		C	1	1	–	C ← 00H			
		!addr16	3	1	–	(addr16) ← 00H			
		ES:!addr16	4	2	–	(ES,addr16) ← 00H			
		saddr	2	1	–	(saddr) ← 00H			
	MOVS	[HL+byte], X	3	1	–	(HL+byte) ← X	×		×
		ES:[HL+byte], X	4	2	–	(ES, HL+byte) ← X	×		×
16-bit data transfer	MOVW	rp, #word	3	1	–	rp ← word			
		saddrp, #word	4	1	–	(saddrp) ← word			
		sfrp, #word	4	1	–	sfrp ← word			
		AX, rp Note 3	1	1	–	AX ← rp			
		rp, AX Note 3	1	1	–	rp ← AX			
		AX, !addr16	3	1	4	AX ← (addr16)			
		!addr16, AX	3	1	–	(addr16) ← AX			
		AX, ES:!addr16	4	2	5	AX ← (ES, addr16)			
		ES:!addr16, AX	4	2	–	(ES, addr16) ← AX			
		AX, saddrp	2	1	–	AX ← (saddrp)			
		saddrp, AX	2	1	–	(saddrp) ← AX			
		AX, sfrp	2	1	–	AX ← sfrp			
		sfrp, AX	2	1	–	sfrp ← AX			

Notes 1. Number of CPU clocks (f_{CLK}) when the internal RAM area, SFR area, or extended SFR area is accessed, or when no data is accessed.

2. Number of CPU clocks (f_{CLK}) when the program memory area is accessed.

3. Except rp = AX

Remark Number of clock is when program exists in the internal ROM (flash memory) area. If fetching the instruction from the internal RAM area, the number becomes double number plus 3 clocks at a maximum.

Table 33-5. Operation List (5/18)

<R>

Instruction Group	Mnemonic	Operands	Bytes	Clocks		Operation	Flag
				Note 1	Note 2		Z AC CY
16-bit data transfer	MOVW	AX, [DE]	1	1	4	AX ← (DE)	
		[DE], AX	1	1	–	(DE) ← AX	
		AX, ES:[DE]	2	2	5	AX ← (ES, DE)	
		ES:[DE], AX	2	2	–	(ES, DE) ← AX	
		AX, [HL]	1	1	4	AX ← (HL)	
		[HL], AX	1	1	–	(HL) ← AX	
		AX, ES:[HL]	2	2	5	AX ← (ES, HL)	
		ES:[HL], AX	2	2	–	(ES, HL) ← AX	
		AX, [DE+byte]	2	1	4	AX ← (DE+byte)	
		[DE+byte], AX	2	1	–	(DE+byte) ← AX	
		AX, ES:[DE+byte]	3	2	5	AX ← ((ES, DE) + byte)	
		ES:[DE+byte], AX	3	2	–	((ES, DE) + byte) ← AX	
		AX, [HL+byte]	2	1	4	AX ← (HL + byte)	
		[HL+byte], AX	2	1	–	(HL + byte) ← AX	
		AX, ES:[HL+byte]	3	2	5	AX ← ((ES, HL) + byte)	
		ES:[HL+byte], AX	3	2	–	((ES, HL) + byte) ← AX	
		AX, [SP+byte]	2	1	–	AX ← (SP + byte)	
		[SP+byte], AX	2	1	–	(SP + byte) ← AX	
		AX, word[B]	3	1	4	AX ← (B + word)	
		word[B], AX	3	1	–	(B+ word) ← AX	
		AX, ES:word[B]	4	2	5	AX ← ((ES, B) + word)	
		ES:word[B], AX	4	2	–	((ES, B) + word) ← AX	
		AX, word[C]	3	1	4	AX ← (C + word)	
		word[C], AX	3	1	–	(C + word) ← AX	
		AX, ES:word[C]	4	2	5	AX ← ((ES, C) + word)	
		ES:word[C], AX	4	2	–	((ES, C) + word) ← AX	
		AX, word[BC]	3	1	4	AX ← (BC + word)	
		word[BC], AX	3	1	–	(BC + word) ← AX	
		AX, ES:word[BC]	4	2	5	AX ← ((ES, BC) + word)	
		ES:word[BC], AX	4	2	–	((ES, BC) + word) ← AX	

Notes 1. Number of CPU clocks (f_{CLK}) when the internal RAM area, SFR area, or extended SFR area is accessed, or when no data is accessed.

2. Number of CPU clocks (f_{CLK}) when the program memory area is accessed.

Remark Number of clock is when program exists in the internal ROM (flash memory) area. If fetching the instruction from the internal RAM area, the number becomes double number plus 3 clocks at a maximum.

Table 33-5. Operation List (6/18)

<R>

Instruction Group	Mnemonic	Operands	Bytes	Clocks		Operation	Flag		
				Note 1	Note 2		Z	AC	CY
16-bit data transfer	MOVW	BC, !addr16	3	1	4	BC ← (addr16)			
		BC, ES:!addr16	4	2	5	BC ← (ES, addr16)			
		DE, !addr16	3	1	4	DE ← (addr16)			
		DE, ES:!addr16	4	2	5	DE ← (ES, addr16)			
		HL, !addr16	3	1	4	HL ← (addr16)			
		HL, ES:!addr16	4	2	5	HL ← (ES, addr16)			
		BC, saddrp	2	1	–	BC ← (saddrp)			
		DE, saddrp	2	1	–	DE ← (saddrp)			
		HL, saddrp	2	1	–	HL ← (saddrp)			
	XCHW	AX, rp Note 3	1	1	–	AX ←→ rp			
	ONEW	AX	1	1	–	AX ← 0001H			
		BC	1	1	–	BC ← 0001H			
	CLRW	AX	1	1	–	AX ← 0000H			
		BC	1	1	–	BC ← 0000H			
8-bit operation	ADD	A, #byte	2	1	–	A, CY ← A + byte	×	×	×
		saddr, #byte	3	2	–	(saddr), CY ← (saddr)+byte	×	×	×
		A, r Note 4	2	1	–	A, CY ← A + r	×	×	×
		r, A	2	1	–	r, CY ← r + A	×	×	×
		A, !addr16	3	1	4	A, CY ← A + (addr16)	×	×	×
		A, ES:!addr16	4	2	5	A, CY ← A + (ES, addr16)	×	×	×
		A, saddr	2	1	–	A, CY ← A + (saddr)	×	×	×
		A, [HL]	1	1	4	A, CY ← A+ (HL)	×	×	×
		A, ES:[HL]	2	2	5	A,CY ← A + (ES, HL)	×	×	×
		A, [HL+byte]	2	1	4	A, CY ← A + (HL+byte)	×	×	×
		A, ES:[HL+byte]	3	2	5	A,CY ← A + ((ES, HL)+byte)	×	×	×
		A, [HL+B]	2	1	4	A, CY ← A + (HL+B)	×	×	×
		A, ES:[HL+B]	3	2	5	A,CY ← A+((ES, HL)+B)	×	×	×
		A, [HL+C]	2	1	4	A, CY ← A + (HL+C)	×	×	×
		A, ES:[HL+C]	3	2	5	A,CY ← A + ((ES, HL) + C)	×	×	×

Notes 1. Number of CPU clocks (f_{CLK}) when the internal RAM area, SFR area, or extended SFR area is accessed, or when no data is accessed.

2. Number of CPU clocks (f_{CLK}) when the program memory area is accessed.

3. Except rp = AX

4. Except r = A

Remark Number of clock is when program exists in the internal ROM (flash memory) area. If fetching the instruction from the internal RAM area, the number becomes double number plus 3 clocks at a maximum.

Table 33-5. Operation List (7/18)

<R>

Instruction Group	Mnemonic	Operands	Bytes	Clocks		Operation	Flag		
				Note 1	Note 2		Z	AC	CY
8-bit operation	ADDC	A, #byte	2	1	–	A, CY ← A+byte+CY	×	×	×
		saddr, #byte	3	2	–	(saddr), CY ← (saddr) +byte+CY	×	×	×
		A, rv Note 3	2	1	–	A, CY ← A + r + CY	×	×	×
		r, A	2	1	–	r, CY ← r + A + CY	×	×	×
		A, !addr16	3	1	4	A, CY ← A + (addr16)+CY	×	×	×
		A, ES:!addr16	4	2	5	A, CY ← A + (ES, addr16)+CY	×	×	×
		A, saddr	2	1	–	A, CY ← A + (saddr)+CY	×	×	×
		A, [HL]	1	1	4	A, CY ← A+ (HL) + CY	×	×	×
		A, ES:[HL]	2	2	5	A,CY ← A+ (ES, HL) + CY	×	×	×
		A, [HL+byte]	2	1	4	A, CY ← A+ (HL+byte) + CY	×	×	×
		A, ES:[HL+byte]	3	2	5	A,CY ← A+ ((ES, HL)+byte) + CY	×	×	×
		A, [HL+B]	2	1	4	A, CY ← A+ (HL+B) +CY	×	×	×
		A, ES:[HL+B]	3	2	5	A,CY ← A+((ES, HL)+B)+CY	×	×	×
		A, [HL+C]	2	1	4	A, CY ← A+ (HL+C)+CY	×	×	×
		A, ES:[HL+C]	3	2	5	A,CY ← A+ ((ES, HL)+C)+CY	×	×	×
	SUB	A, #byte	2	1	–	A, CY ← A – byte	×	×	×
		saddr, #byte	3	2	–	(saddr), CY ← (saddr) – byte	×	×	×
		A, r Note 3	2	1	–	A, CY ← A – r	×	×	×
		r, A	2	1	–	r, CY ← r – A	×	×	×
		A, !addr16	3	1	4	A, CY ← A – (addr16)	×	×	×
		A, ES:!addr16	4	2	5	A, CY ← A – (ES, addr16)	×	×	×
		A, saddr	2	1	–	A, CY ← A – (saddr)	×	×	×
		A, [HL]	1	1	4	A, CY ← A – (HL)	×	×	×
		A, ES:[HL]	2	2	5	A,CY ← A – (ES, HL)	×	×	×
		A, [HL+byte]	2	1	4	A, CY ← A – (HL+byte)	×	×	×
		A, ES:[HL+byte]	3	2	5	A,CY ← A – ((ES, HL)+byte)	×	×	×
		A, [HL+B]	2	1	4	A, CY ← A – (HL+B)	×	×	×
		A, ES:[HL+B]	3	2	5	A,CY ← A – ((ES, HL)+B)	×	×	×
		A, [HL+C]	2	1	4	A, CY ← A – (HL+C)	×	×	×
		A, ES:[HL+C]	3	2	5	A,CY ← A – ((ES, HL)+C)	×	×	×

Notes 1. Number of CPU clocks (f_{CLK}) when the internal RAM area, SFR area, or extended SFR area is accessed, or when no data is accessed.

2. Number of CPU clocks (f_{CLK}) when the program memory area is accessed.

3. Except r = A

Remark Number of clock is when program exists in the internal ROM (flash memory) area. If fetching the instruction from the internal RAM area, the number becomes double number plus 3 clocks at a maximum.

Table 33-5. Operation List (8/18)

<R>

Instruction Group	Mnemonic	Operands	Bytes	Clocks		Operation	Flag		
				Note 1	**Note 2**		Z	AC	CY
8-bit operation	SUBC	A, #byte	2	1	–	A, CY ← A – byte – CY	×	×	×
		saddr, #byte	3	2	–	(saddr), CY ← (saddr) – byte – CY	×	×	×
		A, r Note 3	2	1	–	A, CY ← A – r – CY	×	×	×
		r, A	2	1	–	r, CY ← r – A – CY	×	×	×
		A, !addr16	3	1	4	A, CY ← A – (addr16) – CY	×	×	×
		A, ES:!addr16	4	2	5	A, CY ← A – (ES, addr16) – CY	×	×	×
		A, saddr	2	1	–	A, CY ← A – (saddr) – CY	×	×	×
		A, [HL]	1	1	4	A, CY ← A – (HL) – CY	×	×	×
		A, ES:[HL]	2	2	5	A,CY ← A – (ES, HL) – CY	×	×	×
		A, [HL+byte]	2	1	4	A, CY ← A – (HL+byte) – CY	×	×	×
		A, ES:[HL+byte]	3	2	5	A,CY ← A – ((ES, HL)+byte) – CY	×	×	×
		A, [HL+B]	2	1	4	A, CY ← A – (HL+B) – CY	×	×	×
		A, ES:[HL+B]	3	2	5	A,CY ← A – ((ES, HL)+B) – CY	×	×	×
		A, [HL+C]	2	1	4	A, CY ← A – (HL+C) – CY	×	×	×
		A, ES:[HL+C]	3	2	5	A, CY ← A – ((ES:HL)+C) – CY	×	×	×
	AND	A, #byte	2	1	–	A ← A ∧ byte	×		
		saddr, #byte	3	2	–	(saddr) ← (saddr) ∧ byte	×		
		A, r Note 3	2	1	–	A ← A ∧ r	×		
		r, A	2	1	–	R ← r ∧ A	×		
		A, !addr16	3	1	4	A ← A ∧ (addr16)	×		
		A, ES:!addr16	4	2	5	A ← A ∧ (ES:addr16)	×		
		A, saddr	2	1	–	A ← A ∧ (saddr)	×		
		A, [HL]	1	1	4	A ← A ∧ (HL)	×		
		A, ES:[HL]	2	2	5	A ← A ∧ (ES:HL)	×		
		A, [HL+byte]	2	1	4	A ← A ∧ (HL+byte)	×		
		A, ES:[HL+byte]	3	2	5	A ← A ∧ ((ES:HL)+byte)	×		
		A, [HL+B]	2	1	4	A ← A ∧ (HL+B)	×		
		A, ES:[HL+B]	3	2	5	A ← A ∧ ((ES:HL)+B)	×		
		A, [HL+C]	2	1	4	A ← A ∧ (HL+C)	×		
		A, ES:[HL+C]	3	2	5	A ← A ∧ ((ES:HL)+C)	×		

Notes 1. Number of CPU clocks (f_{CLK}) when the internal RAM area, SFR area, or extended SFR area is accessed, or when no data is accessed.

2. Number of CPU clocks (f_{CLK}) when the program memory area is accessed.

3. Except r = A

Remark Number of clock is when program exists in the internal ROM (flash memory) area. If fetching the instruction from the internal RAM area, the number becomes double number plus 3 clocks at a maximum.

Table 33-5. Operation List (9/18)

<R>

Instruction Group	Mnemonic	Operands	Bytes	Clocks		Operation	Flag
				Note 1	Note 2		Z AC CY
8-bit operation	OR	A, #byte	2	1	–	A ← A∨byte	×
		saddr, #byte	3	2	–	(saddr) ← (saddr)∨byte	×
		A, r Note 3	2	1	–	A ← A∨r	×
		r, A	2	1	–	r ← r∨A	×
		A, !addr16	3	1	4	A ← A∨(addr16)	×
		A, ES:!addr16	4	2	5	A ← A∨(ES:addr16)	×
		A, saddr	2	1	–	A ← A∨(saddr)	×
		A, [HL]	1	1	4	A ← A∨(H)	×
		A, ES:[HL]	2	2	5	A ← A∨(ES:HL)	×
		A, [HL+byte]	2	1	4	A ← A∨(HL+byte)	×
		A, ES:[HL+byte]	3	2	5	A ← A∨((ES:HL)+byte)	×
		A, [HL+B]	2	1	4	A ← A∨(HL+B)	×
		A, ES:[HL+B]	3	2	5	A ← A∨((ES:HL)+B)	×
		A, [HL+C]	2	1	4	A ← A∨(HL+C)	×
		A, ES:[HL+C]	3	2	5	A ← A∨((ES:HL)+C)	×
	XOR	A, #byte	2	1	–	A ← A∨̄byte	×
		saddr, #byte	3	2	–	(saddr) ← (saddr)∨̄byte	×
		A, r Note 3	2	1	–	A ← A∨̄r	×
		r, A	2	1	–	r ← r∨̄A	×
		A, !addr16	3	1	4	A ← A∨̄(addr16)	×
		A, ES:!addr16	4	2	5	A ← A∨̄(ES:addr16)	×
		A, saddr	2	1	–	A ← A∨̄(saddr)	×
		A, [HL]	1	1	4	A ← A∨̄(HL)	×
		A, ES:[HL]	2	2	5	A ← A∨̄(ES:HL)	×
		A, [HL+byte]	2	1	4	A ← A∨̄(HL+byte)	×
		A, ES:[HL+byte]	3	2	5	A ← A∨̄((ES:HL)+byte)	×
		A, [HL+B]	2	1	4	A ← A∨̄(HL+B)	×
		A, ES:[HL+B]	3	2	5	A ← A∨̄((ES:HL)+B)	×
		A, [HL+C]	2	1	4	A ← A∨̄(HL+C)	×
		A, ES:[HL+C]	3	2	5	A ← A∨̄((ES:HL)+C)	×

Notes 1. Number of CPU clocks (f_{CLK}) when the internal RAM area, SFR area, or extended SFR area is accessed, or when no data is accessed.

2. Number of CPU clocks (f_{CLK}) when the program memory area is accessed.

3. Except r = A

Remark Number of clock is when program exists in the internal ROM (flash memory) area. If fetching the instruction from the internal RAM area, the number becomes double number plus 3 clocks at a maximum.

Table 33-5. Operation List (10/18)

<R>

Instruction Group	Mnemonic	Operands	Bytes	Clocks		Operation	Flag		
				Note 1	Note 2		Z	AC	CY
8-bit operation	CMP	A, #byte	2	1	–	A – byte	×	×	×
		!addr16, #byte	4	1	4	(addr16) – byte	×	×	×
		ES:!addr16, #byte	5	2	5	(ES:addr16) – byte	×	×	×
		saddr, #byte	3	1	–	(saddr) – byte	×	×	×
		A, r Note3	2	1	–	A – r	×	×	×
		r, A	2	1	–	r – A	×	×	×
		A, !addr16	3	1	4	A – (addr16)	×	×	×
		A, ES:!addr16	4	2	5	A – (ES:addr16)	×	×	×
		A, saddr	2	1	–	A – (saddr)	×	×	×
		A, [HL]	1	1	4	A – (HL)	×	×	×
		A, ES:[HL]	2	2	5	A – (ES:HL)	×	×	×
		A, [HL+byte]	2	1	4	A – (HL+byte)	×	×	×
		A, ES:[HL+byte]	3	2	5	A – ((ES:HL)+byte)	×	×	×
		A, [HL+B]	2	1	4	A – (HL+B)	×	×	×
		A, ES:[HL+B]	3	2	5	A – ((ES:HL)+B)	×	×	×
		A, [HL+C]	2	1	4	A – (HL+C)	×	×	×
		A, ES:[HL+C]	3	2	5	A – ((ES:HL)+C)	×	×	×
	CMP0	A	1	1	–	A – 00H	×	×	×
		X	1	1	–	X – 00H	×	×	×
		B	1	1	–	B – 00H	×	×	×
		C	1	1	–	C – 00H	×	×	×
		!addr16	3	1	4	(addr16) – 00H	×	×	×
		ES:!addr16	4	2	5	(ES:addr16) – 00H	×	×	×
		saddr	2	1	–	(saddr) – 00H	×	×	×
	CMPS	X, [HL+byte]	3	1	4	X – (HL+byte)	×	×	×
		X, ES:[HL+byte]	4	2	5	X – ((ES:HL)+byte)	×	×	×

Notes 1. Number of CPU clocks (f_{CLK}) when the internal RAM area, SFR area, or extended SFR area is accessed, or when no data is accessed.

2. Number of CPU clocks (f_{CLK}) when the program memory area is accessed.

3. Except r = A

Remark Number of clock is when program exists in the internal ROM (flash memory) area. If fetching the instruction from the internal RAM area, the number becomes double number plus 3 clocks at a maximum.

Table 33-5. Operation List (11/18)

<R>

Instruction Group	Mnemonic	Operands	Bytes	Clocks		Operation	Flag		
				Note 1	**Note 2**		Z	AC	CY
16-bit operation	ADDW	AX, #word	3	1	–	AX, CY ← AX+word	×	×	×
		AX, AX	1	1	–	AX, CY ← AX+AX	×	×	×
		AX, BC	1	1	–	AX, CY ← AX+BC	×	×	×
		AX, DE	1	1	–	AX, CY ← AX+DE	×	×	×
		AX, HL	1	1	–	AX, CY ← AX+HL	×	×	×
		AX, !addr16	3	1	4	AX, CY ← AX+(addr16)	×	×	×
		AX, ES:!addr16	4	2	5	AX, CY ← AX+(ES:addr16)	×	×	×
		AX, saddrp	2	1	–	AX, CY ← AX+(saddrp)	×	×	×
		AX, [HL+byte]	3	1	4	AX, CY ← AX+(HL+byte)	×	×	×
		AX, ES: [HL+byte]	4	2	5	AX, CY ← AX+((ES:HL)+byte)	×	×	×
	SUBW	AX, #word	3	1	–	AX, CY ← AX – word	×	×	×
		AX, BC	1	1	–	AX, CY ← AX – BC	×	×	×
		AX, DE	1	1	–	AX, CY ← AX – DE	×	×	×
		AX, HL	1	1	–	AX, CY ← AX – HL	×	×	×
		AX, !addr16	3	1	4	AX, CY ← AX – (addr16)	×	×	×
		AX, ES:!addr16	4	2	5	AX, CY ← AX – (ES:addr16)	×	×	×
		AX, saddrp	2	1	–	AX, CY ← AX – (saddrp)	×	×	×
		AX, [HL+byte]	3	1	4	AX, CY ← AX – (HL+byte)	×	×	×
		AX, ES: [HL+byte]	4	2	5	AX, CY ← AX – ((ES:HL)+byte)	×	×	×
	CMPW	AX, #word	3	1	–	AX – word	×	×	×
		AX, BC	1	1	–	AX – BC	×	×	×
		AX, DE	1	1	–	AX – DE	×	×	×
		AX, HL	1	1	–	AX – HL	×	×	×
		AX, !addr16	3	1	4	AX – (addr16)	×	×	×
		AX, ES:!addr16	4	2	5	AX – (ES:addr16)	×	×	×
		AX, saddrp	2	1	–	AX – (saddrp)	×	×	×
		AX, [HL+byte]	3	1	4	AX – (HL+byte)	×	×	×
		AX, ES: [HL+byte]	4	2	5	AX – ((ES:HL)+byte)	×	×	×

<R>

Notes 1. Number of CPU clocks (f_{CLK}) when the internal RAM area, SFR area, or extended SFR area is accessed, or when no data is accessed.

2. Number of CPU clocks (f_{CLK}) when the program memory area is accessed.

Remark Number of clock is when program exists in the internal ROM (flash memory) area. If fetching the instruction from the internal RAM area, the number becomes double number plus 3 clocks at a maximum.

Table 33-5. Operation List (12/18)

Instruction Group	Mnemonic	Operands	Bytes	Clocks		Operation	Flag
				Note 1	**Note 2**		Z AC CY
Multiply, Divide, Multiply & accumu-late	MULU	X	1	1	–	AX ← A × X	
	MULHU		3	2	–	BCAX ← AX × BC (unsigned)	
	MULH		3	2	–	BCAX ← AX × BC (signed)	
	DIVHU		3	9	–	AX (quotient), DE (remainder) ← AX ÷ DE (unsigned)	
	DIVWU		3	17	–	BCAX (quotient), HLDE (remainder) ← BCAX ÷ HLDE (unsigned)	
	MACHU		3	3	–	MACR ← MACR + AX × BC (unsigned)	× ×
	MACH		3	3	–	MACR ← MACR + AX × BC(signed)	× ×

Notes 1. Number of CPU clocks (f_{CLK}) when the internal RAM area, SFR area, or extended SFR area is accessed, or when no data is accessed.

2. Number of CPU clocks (f_{CLK}) when the program memory area is accessed.

Caution Disable interrupts when executing the DIVHU or DIVWU instruction in an interrupt servicing routine. Alternatively, unless they are executed in the RAM area, note that execution of a DIVHU or DIVWU instruction is possible even with interrupts enabled as long as a NOP instruction is added immediately after the DIVHU or DIVWU instruction in the assembly language source code. The following compilers automatically add a NOP instruction immediately after any DIVHU or DIVWU instruction output during the build process.

- V. 1.71 and later versions of the CA78K0R (Renesas Electronics compiler), for both C and assembly language source code

- Service pack 1.40.6 and later versions of the EWRL78 (IAR compiler), for C language source code

- GNURL78 (KPIT compiler), for C language source code

Remarks 1. Number of clock is when program exists in the internal ROM (flash memory) area. If fetching the instruction from the internal RAM area, the number becomes double number plus 3 clocks at a maximum.

2. MACR indicates the multiplication and accumulation register (MACRH, MACRL).

Table 33-5. Operation List (13/18)

<R>

Instruction Group	Mnemonic	Operands	Bytes	Clocks		Operation	Flag		
				Note 1	Note 2		Z	AC	CY
Increment/ decrement	INC	r	1	1	–	r ← r+1	×	×	
		!addr16	3	2	–	(addr16) ← (addr16)+1	×	×	
		ES:!addr16	4	3	–	(ES, addr16) ← (ES, addr16)+1	×	×	
		saddr	2	2	–	(saddr) ← (saddr)+1	×	×	
		[HL+byte]	3	2	–	(HL+byte) ← (HL+byte)+1	×	×	
		ES: [HL+byte]	4	3	–	((ES:HL)+byte) ← ((ES:HL)+byte)+1	×	×	
	DEC	r	1	1	–	r ← r – 1	×	×	
		!addr16	3	2	–	(addr16) ← (addr16) – 1	×	×	
		ES:!addr16	4	3	–	(ES, addr16) ← (ES, addr16) – 1	×	×	
		saddr	2	2	–	(saddr) ← (saddr) – 1	×	×	
		[HL+byte]	3	2	–	(HL+byte) ← (HL+byte) – 1	×	×	
		ES: [HL+byte]	4	3	–	((ES:HL)+byte) ← ((ES:HL)+byte) – 1	×	×	
	INCW	rp	1	1	–	rp ← rp+1			
		!addr16	3	2	–	(addr16) ← (addr16)+1			
		ES:!addr16	4	3	–	(ES, addr16) ← (ES, addr16)+1			
		saddrp	2	2	–	(saddrp) ← (saddrp)+1			
		[HL+byte]	3	2	–	(HL+byte) ← (HL+byte)+1			
		ES: [HL+byte]	4	3	–	((ES:HL)+byte) ← ((ES:HL)+byte)+1			
	DECW	rp	1	1	–	rp ← rp – 1			
		!addr16	3	2	–	(addr16) ← (addr16) – 1			
		ES:!addr16	4	3	–	(ES, addr16) ← (ES, addr16) – 1			
		saddrp	2	2	–	(saddrp) ← (saddrp) – 1			
		[HL+byte]	3	2	–	(HL+byte) ← (HL+byte) – 1			
		ES: [HL+byte]	4	3	–	((ES:HL)+byte) ← ((ES:HL)+byte) – 1			
Shift	SHR	A, cnt	2	1	–	(CY ← A_0, A_{m-1} ← A_m, A_7 ← 0) ×cnt			×
	SHRW	AX, cnt	2	1	–	(CY ← AX_0, AX_{m-1} ← AX_m, AX_{15} ← 0) ×cnt			×
	SHL	A, cnt	2	1	–	(CY ← A_7, A_m ← A_{m-1}, A_0 ← 0) ×cnt			×
		B, cnt	2	1	–	(CY ← B_7, B_m ← B_{m-1}, B_0 ← 0) ×cnt			×
		C, cnt	2	1	–	(CY ← C_7, C_m ← C_{m-1}, C_0 ← 0) ×cnt			×
	SHLW	AX, cnt	2	1	–	(CY ← AX_{15}, AX_m ← AX_{m-1}, AX_0 ← 0) ×cnt			×
		BC, cnt	2	1	–	(CY ← BC_{15}, BC_m ← BC_{m-1}, BC_0 ← 0) ×cnt			×
	SAR	A, cnt	2	1	–	(CY ← A_0, A_{m-1} ← A_m, A_7 ← A_7) ×cnt			×
	SARW	AX, cnt	2	1	–	(CY ← AX_0, AX_{m-1} ← AX_m, AX_{15} ← AX_{15}) ×cnt			×

Notes 1. Number of CPU clocks (f_{CLK}) when the internal RAM area, SFR area, or extended SFR area is accessed, or when no data is accessed.

2. Number of CPU clocks (f_{CLK}) when the program memory area is accessed.

Remarks 1. Number of clock is when program exists in the internal ROM (flash memory) area. If fetching the instruction from the internal RAM area, the number becomes double number plus 3 clocks at a maximum.

2. cnt indicates the bit shift count.

Table 33-5. Operation List (14/18)

<R>

Instruction Group	Mnemonic	Operands	Bytes	Clocks		Operation	Flag		
				Note 1	**Note 2**		Z	AC	CY
Rotate	ROR	A, 1	2	1	–	(CY, $A_7 \leftarrow A_0$, $A_{m-1} \leftarrow A_m$)×1			×
	ROL	A, 1	2	1	–	(CY, $A_0 \leftarrow A_7$, $A_{m+1} \leftarrow A_m$)×1			×
	RORC	A, 1	2	1	–	(CY ← A_0, $A_7 \leftarrow$ CY, $A_{m-1} \leftarrow A_m$)×1			×
	ROLC	A, 1	2	1	–	(CY ← A_7, $A_0 \leftarrow$ CY, $A_{m+1} \leftarrow A_m$)×1			×
	ROLWC	AX,1	2	1	–	(CY ← AX_{15}, $AX_0 \leftarrow$ CY, $AX_{m+1} \leftarrow AX_m$) ×1			×
		BC,1	2	1	–	(CY ← BC_{15}, $BC_0 \leftarrow$ CY, $BC_{m+1} \leftarrow BC_m$) ×1			×
Bit manipulate	MOV1	CY, A.bit	2	1	–	CY ← A.bit			×
		A.bit, CY	2	1	–	A.bit ← CY			
		CY, PSW.bit	3	1	–	CY ← PSW.bit			×
		PSW.bit, CY	3	4	–	PSW.bit ← CY	×	×	
		CY, saddr.bit	3	1	–	CY ← (saddr).bit			×
		saddr.bit, CY	3	2	–	(saddr).bit ← CY			
		CY, sfr.bit	3	1	–	CY ← sfr.bit			×
		sfr.bit, CY	3	2	–	sfr.bit ← CY			
		CY,[HL].bit	2	1	4	CY ← (HL).bit			×
		[HL].bit, CY	2	2	–	(HL).bit ← CY			
		CY, ES:[HL].bit	3	2	5	CY ← (ES, HL).bit			×
		ES:[HL].bit, CY	3	3	–	(ES, HL).bit ← CY			
	AND1	CY, A.bit	2	1	–	CY ← CY ∧ A.bit			×
		CY, PSW.bit	3	1	–	CY ← CY ∧ PSW.bit			×
		CY, saddr.bit	3	1	–	CY ← CY ∧ (saddr).bit			×
		CY, sfr.bit	3	1	–	CY ← CY ∧ sfr.bit			×
		CY,[HL].bit	2	1	4	CY ← CY ∧ (HL).bit			×
		CY, ES:[HL].bit	3	2	5	CY ← CY ∧ (ES, HL).bit			×
	OR1	CY, A.bit	2	1	–	CY ← CY ∨ A.bit			×
		CY, PSW.bit	3	1	–	CYX ← CY ∨ ∨PSW.bit			×
		CY, saddr.bit	3	1	–	CY ← CY ∨ (saddr).bit			×
		CY, sfr.bit	3	1	–	CY ← CY ∨ sfr.bit			×
		CY, [HL].bit	2	1	4	CY ← CY ∨ (HL).bit			×
		CY, ES:[HL].bit	3	2	5	CY ← CY ∨ (ES, HL).bit			×

Notes 1. Number of CPU clocks (f_{CLK}) when the internal RAM area, SFR area, or extended SFR area is accessed, or when no data is accessed.

2. Number of CPU clocks (f_{CLK}) when the program memory area is accessed.

Remark Number of clock is when program exists in the internal ROM (flash memory) area. If fetching the instruction from the internal RAM area, the number becomes double number plus 3 clocks at a maximum.

Table 33-5. Operation List (15/18)

<R>

Instruction Group	Mnemonic	Operands	Bytes	Clocks		Operation	Flag		
				Note 1	**Note 2**		Z	AC	CY
Bit manipulate	XOR1	CY, A.bit	2	1	–	CY ← CY ⊻ A.bit			×
		CY, PSW.bit	3	1	–	CY ← CY ⊻ PSW.bit			×
		CY, saddr.bit	3	1	–	CY ← CY ⊻ (saddr).bit			×
		CY, sfr.bit	3	1	–	CY ← CY ⊻ sfr.bit			×
		CY, [HL].bit	2	1	4	CY ← CY ⊻ (HL).bit			×
		CY, ES:[HL].bit	3	2	5	CY ← CY ⊻ (ES, HL).bit			×
	SET1	A.bit	2	1	–	A.bit ← 1			
		PSW.bit	3	4	–	PSW.bit ← 1	×	×	×
		!addr16.bit	4	2	–	(addr16).bit ← 1			
		ES:!addr16.bit	5	3	–	(ES, addr16).bit ← 1			
		saddr.bit	3	2	–	(saddr).bit ← 1			
		sfr.bit	3	2	–	sfr.bit ← 1			
		[HL].bit	2	2	–	(HL).bit ← 1			
		ES:[HL].bit	3	3	–	(ES, HL).bit ← 1			
	CLR1	A.bit	2	1	–	A.bit ← 0			
		PSW.bit	3	4	–	PSW.bit ← 0	×	×	×
		!addr16.bit	4	2	–	(addr16).bit ← 0			
		ES:!addr16.bit	5	3	–	(ES, addr16).bit ← 0			
		saddr.bit	3	2	–	(saddr.bit) ← 0			
		sfr.bit	3	2	–	sfr.bit ← 0			
		[HL].bit	2	2	–	(HL).bit ← 0			
		ES:[HL].bit	3	3	–	(ES, HL).bit ← 0			
	SET1	CY	2	1	–	CY ← 1			1
	CLR1	CY	2	1	–	CY ← 0			0
	NOT1	CY	2	1	–	CY ← $\overline{CY}$			×

Notes 1. Number of CPU clocks (f_{CLK}) when the internal RAM area, SFR area, or extended SFR area is accessed, or when no data is accessed.

2. Number of CPU clocks (f_{CLK}) when the program memory area is accessed.

Remark Number of clock is when program exists in the internal ROM (flash memory) area. If fetching the instruction from the internal RAM area, the number becomes double number plus 3 clocks at a maximum.

Table 33-5. Operation List (16/18)

<R>

Instruction Group	Mnemonic	Operands	Bytes	Clocks		Operation	Flag		
				Note 1	Note 2		Z	AC	CY
Call/ return	CALL	rp	2	3	–	(SP – 2) ← $(PC+2)_S$, (SP – 3) ← $(PC+2)_H$, (SP – 4) ← $(PC+2)_L$, PC ← CS, rp, SP ← SP – 4			
		$!addr20	3	3	–	(SP – 2) ← $(PC+3)_S$, (SP – 3) ← $(PC+3)_H$, (SP – 4) ← $(PC+3)_L$, PC ← PC+3+jdisp16, SP ← SP – 4			
		!addr16	3	3	–	(SP – 2) ← $(PC+3)_S$, (SP – 3) ← $(PC+3)_H$, (SP – 4) ← $(PC+3)_L$, PC ← 0000, addr16, SP ← SP – 4			
		!!addr20	4	3	–	(SP – 2) ← $(PC+4)_S$, (SP – 3) ← $(PC+4)_H$, (SP – 4) ← $(PC+4)_L$, PC ← addr20, SP ← SP – 4			
	CALLT	[addr5]	2	5	–	(SP – 2) ← $(PC+2)_S$, (SP – 3) ← $(PC+2)_H$, (SP – 4) ← $(PC+2)_L$, PC_S ← 0000, PC_H ← (0000, addr5+1), PC_L ← (0000, addr5), SP ← SP – 4			
	BRK	-	2	5	–	(SP – 1) ← PSW, (SP – 2) ← $(PC+2)_S$, (SP – 3) ← $(PC+2)_H$, (SP – 4) ← $(PC+2)_L$, PC_S ← 0000, PC_H ← (0007FH), PC_L ← (0007EH), SP ← SP – 4, IE ← 0			
	RET	-	1	6	–	PC_L ← (SP), PC_H ← (SP+1), PC_S ← (SP+2), SP ← SP+4			
	RETI	-	2	6	–	PC_L ← (SP), PC_H ← (SP+1), PC_S ← (SP+2), PSW← (SP+3), SP ← SP+4	R	R	R
	RETB	-	2	6	–	PC_L ← (SP), PC_H ← (SP+1), PC_S ← (SP+2), PSW ← (SP+3), SP ← SP+4	R	R	R

Notes 1. Number of CPU clocks (f_{CLK}) when the internal RAM area, SFR area, or extended SFR area is accessed, or when no data is accessed.

2. Number of CPU clocks (f_{CLK}) when the program memory area is accessed.

Remark Number of clock is when program exists in the internal ROM (flash memory) area. If fetching the instruction from the internal RAM area, the number becomes double number plus 3 clocks at a maximum.

Table 33-5. Operation List (17/18)

<R>

Instruction Group	Mnemonic	Operands	Bytes	Clocks		Operation	Flag		
				Note 1	Note 2		Z	AC	CY
Stack manipulate	PUSH	PSW	2	1	–	(SP – 1) ← PSW, (SP – 2) ← 00H, SP ← SP–2			
		rp	1	1	–	(SP – 1) ← rp_H, (SP – 2) ← rp_L, SP ← SP – 2			
	POP	PSW	2	3	–	PSW ← (SP+1), SP ← SP + 2	R	R	R
		rp	1	1	–	rp_L ←(SP), rp_H ← (SP+1), SP ← SP + 2			
	MOVW	SP, #word	4	1	–	SP ← word			
		SP, AX	2	1	–	SP ← AX			
		AX, SP	2	1	–	AX ← SP			
		HL, SP	3	1	–	HL ← SP			
		BC, SP	3	1	–	BC ← SP			
		DE, SP	3	1	–	DE ← SP			
	ADDW	SP, #byte	2	1	–	SP ← SP + byte			
	SUBW	SP, #byte	2	1	–	SP ← SP – byte			
Unconditional branch	BR	AX	2	3	–	PC ← CS, AX			
		$addr20	2	3	–	PC ← PC + 2 + jdisp8			
		$!addr20	3	3	–	PC ← PC + 3 + jdisp16			
		!addr16	3	3	–	PC ← 0000, addr16			
		!!addr20	4	3	–	PC ← addr20			
Conditional branch	BC	$addr20	2	2/4 Note3	–	PC ← PC + 2 + jdisp8 if CY = 1			
	BNC	$addr20	2	2/4 Note3	–	PC ← PC + 2 + jdisp8 if CY = 0			
	BZ	$addr20	2	2/4 Note3	–	PC ← PC + 2 + jdisp8 if Z = 1			
	BNZ	$addr20	2	2/4 Note3	–	PC ← PC + 2 + jdisp8 if Z = 0			
	BH	$addr20	3	2/4 Note3	–	PC ← PC + 3 + jdisp8 if (Z∨CY)=0			
	BNH	$addr20	3	2/4 Note3	–	PC ← PC + 3 + jdisp8 if (Z∨CY)=1			
	BT	saddr.bit, $addr20	4	3/5 Note3	–	PC ← PC + 4 + jdisp8 if (saddr).bit = 1			
		sfr.bit, $addr20	4	3/5 Note3	–	PC ← PC + 4 + jdisp8 if sfr.bit = 1			
		A.bit, $addr20	3	3/5 Note3	–	PC ← PC + 3 + jdisp8 if A.bit = 1			
		PSW.bit, $addr20	4	3/5 Note3	–	PC ← PC + 4 + jdisp8 if PSW.bit = 1			
		[HL].bit, $addr20	3	3/5 Note3	6/7	PC ← PC + 3 + jdisp8 if (HL).bit = 1			
		ES:[HL].bit, $addr20	4	4/6 Note3	7/8	PC ← PC + 4 + jdisp8 if (ES, HL).bit = 1			

Notes 1. Number of CPU clocks (f_{CLK}) when the internal RAM area, SFR area, or extended SFR area is accessed, or when no data is accessed.

2. Number of CPU clocks (f_{CLK}) when the program memory area is accessed.

3. This indicates the number of clocks "when condition is not met/when condition is met".

Remark Number of clock is when program exists in the internal ROM (flash memory) area. If fetching the instruction from the internal RAM area, the number becomes double number plus 3 clocks at a maximum.

Table 33-5. Operation List (18/18)

<R>

Instruction Group	Mnemonic	Operands	Bytes	Clocks		Operation	Flag		
				Note 1	**Note 2**		Z	AC	CY
Conditional branch	BF	saddr.bit, $addr20	4	3/5 Note3	–	PC ← PC + 4 + jdisp8 if (saddr).bit = 0			
		sfr.bit, $addr20	4	3/5 Note3	–	PC ← PC + 4 + jdisp8 if sfr.bit = 0			
		A.bit, $addr20	3	3/5 Note3	–	PC ← PC + 3 + jdisp8 if A.bit = 0			
		PSW.bit, $addr20	4	3/5 Note3	–	PC ← PC + 4 + jdisp8 if PSW.bit = 0			
		[HL].bit, $addr20	3	3/5 Note3	6/7	PC ← PC + 3 + jdisp8 if (HL).bit = 0			
		ES:[HL].bit, $addr20	4	4/6 Note3	7/8	PC ← PC + 4 + jdisp8 if (ES, HL).bit = 0			
	BTCLR	saddr.bit, $addr20	4	3/5 Note3	–	PC ← PC + 4 + jdisp8 if (saddr).bit = 1 then reset (saddr).bit			
		sfr.bit, $addr20	4	3/5 Note3	–	PC ← PC + 4 + jdisp8 if sfr.bit = 1 then reset sfr.bit			
		A.bit, $addr20	3	3/5 Note3	–	PC ← PC + 3 + jdisp8 if A.bit = 1 then reset A.bit			
		PSW.bit, $addr20	4	3/5 Note3	–	PC ← PC + 4 + jdisp8 if PSW.bit = 1 then reset PSW.bit	×	×	×
		[HL].bit, $addr20	3	3/5 Note3	–	PC ← PC + 3 + jdisp8 if (HL).bit = 1 then reset (HL).bit			
		ES:[HL].bit, $addr20	4	4/6 Note3	–	PC ← PC + 4 + jdisp8 if (ES, HL).bit = 1 then reset (ES, HL).bit			
Conditional skip	SKC	–	2	1	–	Next instruction skip if CY = 1			
	SKNC	–	2	1	–	Next instruction skip if CY = 0			
	SKZ	–	2	1	–	Next instruction skip if Z = 1			
	SKNZ	–	2	1	–	Next instruction skip if Z = 0			
	SKH	–	2	1	–	Next instruction skip if (Z∨CY)=0			
	SKNH	–	2	1	–	Next instruction skip if (Z∨CY)=1			
CPU control	SEL Note4	RBn	2	1	–	RBS[1:0] ← n			
	NOP	–	1	1	–	No Operation			
	EI	–	3	4	–	IE ← 1 (Enable Interrupt)			
	DI	–	3	4	–	IE ← 0 (Disable Interrupt)			
	HALT	–	2	3	–	Set HALT Mode			
	STOP	–	2	3	–	Set STOP Mode			

Notes 1. Number of CPU clocks (f_{CLK}) when the internal RAM area, SFR area, or extended SFR area is accessed, or when no data is accessed.

2. Number of CPU clocks (f_{CLK}) when the program memory area is accessed.

3. This indicates the number of clocks “when condition is not met/when condition is met”.

4. n indicates the number of register banks (n = 0 to 3)

Remark Number of clock is when program exists in the internal ROM (flash memory) area. If fetching the instruction from the internal RAM area, the number becomes double number plus 3 clocks at a maximum.

CHAPTER 34 ELECTRICAL SPECIFICATIONS (GRADE L)

Cautions 1. RL78/F13 and RL78/F14 have an on-chip debug function, which is provided for development and evaluation. Do not use the on-chip debug function in products designated for mass production, because the guaranteed number of rewritable times of the flash memory may be exceeded when this function is used, and product reliability therefore cannot be guaranteed. Renesas Electronics is not liable for problems occurring when the on-chip debug function is used.

2. With products not provided with an EV_{DD0}, EV_{DD1}, EV_{SS0}, or EV_{SS1} pin, replace EV_{DD0} and EV_{DD1} with V_{DD}, or replace EV_{SS0} and EV_{SS1} with V_{SS}.

3. The pins mounted depending on the product. For details, refer to 1.5 Pin Configurations and 2.1 Pin Function List.

4. The products are classified into the following five groups according to the product type, pin count, and code flash memory size. In this chapter, the products are referred to by group names depending on the content. In this case, refer to the following classification.

Group A: RL78/F13 (LIN incorporated) products with 20, 30, 32, 48, or 64 pins and 16 Kbytes to 64 Kbytes of code flash memory

Group B: RL78/F13 (LIN incorporated) products with 48 or 64 pins and 96 Kbytes to 128 Kbytes of code flash memory or with 80 pins and 64 Kbytes to 128 Kbytes of code flash memory

Group C: RL78/F13 (CAN and LIN incorporated) products with 30, 32, 48, 64, or 80 pins and 32 Kbytes to 128 Kbytes of code flash memory

Group D: RL78/F14 products with 30, 32, 48, 64, or 80 pins and 48 Kbytes to 96 Kbytes of code flash memory

Group E: RL78/F14 products with 48, 64, or 80 pins and 128 Kbytes to 256 Kbytes of code flash memory or with 100 pins and 64 Kbytes to 256 Kbytes of code flash memory

34.1 Absolute Maximum Ratings

(1/2)

Parameter	Symbol	Conditions	Ratings	Unit
Supply voltage	V_{DD}		-0.5 to +6.5	V
	EV_{DD0}, EV_{DD1}	$EV_{DD0} = EV_{DD1}$	-0.5 to +6.5	V
	V_{SS}		-0.5 to +0.3	V
	EV_{SS0}, EV_{SS1}	$EV_{SS0} = EV_{SS1}$	-0.5 to +0.3	V
REGC pin input voltage	V_{IREGC}	REGC	-0.3 to +2.8 and -0.3 to V_{DD}+0.3[Note 1]	V
Input voltage	V_{I1}	P00 to P03, P10 to P17, P30 to P32, P40 to P47, P50 to P57, P60 to P67, P70 to P77, P92 to P97[Note 4], P106, P107, P120, P125 to P127, P140, P150 to P157	-0.3 to EV_{DD0}+0.3 and -0.3 to V_{DD}+0.3[Note 2]	V
	V_{I2}	P33, P34, P80 to P87, P90 to P97[Note 4], P100 to P105, P121 to P124, P137, $\overline{RESET}$	-0.3 to V_{DD}+0.3[Note 2]	V
Output voltage	V_{O1}	P00 to P03, P10 to P17, P30 to P32, P40 to P47, P50 to P57, P60 to P67, P70 to P77, P92 to P97[Note 4], P106, P107, P120, P125 to P127, P130, P140, P150 to P157	-0.3 to EV_{DD0}+0.3 and -0.3 to V_{DD}+0.3[Note 2]	V
	V_{O2}	P33, P34, P80 to P87, P90 to P97[Note 4], P100 to P105	-0.3 to V_{DD}+0.3	V
Analog input voltage	V_{AI1}	ANI24 to ANI30	-0.3 to EV_{DD0}+0.3 and -0.3 to $AV_{REF(+)}$+0.3[Notes 2, 3]	V
	V_{AI2}	ANI0 to ANI23	-0.3 to V_{DD}+0.3 and -0.3 to $AV_{REF(+)}$+0.3[Notes 2, 3]	V

Notes 1. Connect the REGC pin to V_{SS} via a capacitor (0.47 to 1 μF). This value regulates the absolute maximum rating of the REGC pin. Do not use this pin with voltage applied to it.

2. Must be 6.5 V or lower.

3. For pins to be used in A/D conversion, the voltage should not exceed the value $AV_{REF(+)}$ + 0.3.

4. For pin I/O buffer power supplies, refer to **Table 4-1 Pin I/O Buffer Power Supplies**.

Caution Product quality may suffer if the absolute maximum rating is exceeded even momentarily for any parameter. That is, the absolute maximum ratings are rated values at which the product is on the verge of suffering physical damage, and therefore the product must be used under conditions that ensure that the absolute maximum ratings are not exceeded.

Remark Unless specified otherwise, the characteristics of alternate-function pins are the same as those of the port pins.

(2/2)

Parameter	Symbol	Conditions		Ratings	Unit
Output current, high	I_{OH1}	Per pin	P00 to P03, P10 to P17, P30 to P32, P40 to P47, P50 to P57, P60 to P67, P70 to P77, P92 to P97[Note], P106, P107, P120, P125 to P127, P130, P140, P150 to P157	-40	mA
		Total of all pins -170 mA	P01, P02, P40 to P47, P92 to P97[Note], P120, P125 to P127, P150 to P153	-70	mA
			P00, P03, P10 to P17, P30 to P32, P50 to P57, P60 to P67, P70 to P77, P106, P107, P130, P140, P154 to P157	-100	mA
	I_{OH2}	Per pin	P33, P34, P80 to P87, P90 to P97[Note], P100 to P105	-0.5	mA
		Total of all pins		-2	mA
Output current, low	I_{OL1}	Per pin	P00 to P03, P10 to P17, P30 to P32, P40 to P47, P50 to P57, P60 to P67, P70 to P77, P92 to P97[Note], P106, P107, P120, P125 to P127, P130, P140, P150 to P157	40	mA
		Total of all pins 170 mA	P01, P02, P40 to P47, P92 to P97[Note], P120, P125 to P127, P150 to P153	70	mA
			P00, P03, P10 to P17, P30 to P32, P50 to P57, P60 to P67, P70 to P77, P106, P107, P130, P140, P154 to P157	100	mA
	I_{OL2}	Per pin	P33, P34, P80 to P87, P90 to P97[Note], P100 to P105	1	mA
		Total of all pins		5	mA
Operating ambient temperature	T_A	In normal operation mode		-40 to +105	°C
		In flash memory programming mode			
Storage temperature	T_{stg}			-65 to +150	°C

Note For pin I/O buffer power supplies, refer to **Table 4-1 Pin I/O Buffer Power Supplies**.

Caution **Product quality may suffer if the absolute maximum rating is exceeded even momentarily for any parameter. That is, the absolute maximum ratings are rated values at which the product is on the verge of suffering physical damage, and therefore the product must be used under conditions that ensure that the absolute maximum ratings are not exceeded.**

Remark Unless specified otherwise, the characteristics of alternate-function pins are the same as those of the port pins.

34.2 Oscillator Characteristics

34.2.1 Main System Clock Oscillator Characteristics

(T_A = -40 to +105°C, 2.7 V ≤ EV_{DD0} = EV_{DD1} = V_{DD} ≤ 5.5 V, V_{SS} = EV_{SS0} = EV_{SS1} = 0 V)

Resonator	Recommended Circuit	Parameter	Conditions	MIN.	TYP.	MAX.	Unit
Ceramic resonator/ Crystal resonator	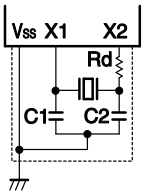	X1 clock oscillation frequency (fx)	2.7 V ≤ V_{DD} ≤ 5.5 V	1.0		20.0	MHz

Cautions 1. When using the X1 oscillator, wire as follows in the area enclosed by the broken lines in the above figures to avoid an adverse effect from wiring capacitance.

- **Keep the wiring length as short as possible.**
- **Do not cross the wiring with the other signal lines.**
- **Do not route the wiring near a signal line through which a high fluctuating current flows.**
- **Always make the ground point of the oscillator capacitor the same potential as V_{SS}.**
- **Do not ground the capacitor to a ground pattern through which a high current flows.**
- **Do not fetch signals from the oscillator.**

2. Customers are requested to consult the resonator manufacturer to select an appropriate resonator and to determine the proper oscillation constant. Customers are also requested to adequately evaluate the oscillation on their system. Determine the X1 clock oscillation stabilization time using the oscillation stabilization time of the oscillation stabilization time counter status register (OSTC) and the oscillation stabilization time select register (OSTS) after sufficiently evaluating the oscillation stabilization time with the resonator to be used.

34.2.2 On-chip Oscillator Characteristics

(T_A = -40 to +105°C, 2.7 V ≤ EV_{DD0} = EV_{DD1} = V_{DD} ≤ 5.5 V, V_{SS} = EV_{SS0} = EV_{SS1} = 0 V)

Oscillators	Symbol	Conditions	MIN.	TYP.	MAX.	Unit
High-speed on-chip oscillator clock frequency[Note]	f_{IH}		1		64	MHz
High-speed on-chip oscillator clock frequency accuracy	-		-2		+2	%
Low-speed on-chip oscillator clock frequency	f_{IL}, f_{WDT}			15		kHz
Low-speed on-chip oscillator clock frequency accuracy	-		-15		+15	%

Note High-speed on-chip oscillator frequency is selected with bits 0 to 4 of the option byte (000C2H/020C2H) and bits 0 to 2 of the HOCODIV register.

34.2.3 Subsystem Clock Oscillator Characteristics

(T_A = -40 to +105°C, 2.7 V ≤ EV_{DD0} = EV_{DD1} = V_{DD} ≤ 5.5 V, V_{SS} = EV_{SS0} = EV_{SS1} = 0 V)

Resonator	Recommended Circuit	Item	Conditions	MIN.	TYP.	MAX.	Unit
Crystal resonator	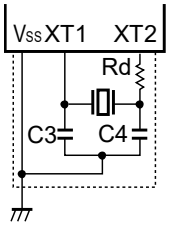	XT1 clock oscillation frequency (f_{XT})	2.7 V ≤ V_{DD} ≤ 5.5 V	29.0	32.768	35.0	kHz

Cautions 1. When using the XT1 oscillator, wire as follows in the area enclosed by the broken lines in the above figures to avoid an adverse effect from wiring capacitance.

- **Keep the wiring length as short as possible.**
- **Do not cross the wiring with the other signal lines.**
- **Do not route the wiring near a signal line through which a high fluctuating current flows.**
- **Always make the ground point of the oscillator capacitor the same potential as V_{SS}.**
- **Do not ground the capacitor to a ground pattern through which a high current flows.**
- **Do not fetch signals from the oscillator.**

2. The XT1 oscillator is designed as a low-amplitude circuit for reducing power consumption and thus required to be adequately evaluated on the system. Customers are requested to consult the resonator manufacturer to select an appropriate resonator and to determine the proper oscillation constant.

34.2.4 PLL Circuit Characteristics

(T_A = -40 to +105°C, 2.7 V ≤ EV_{DD0} = EV_{DD1} = V_{DD} ≤ 5.5 V, V_{SS} = EV_{SS0} = EV_{SS1} = 0 V)

Resonator	Symbol	Conditions		MIN.	TYP.	MAX.	Unit
PLL input enable clock frequency[Note 1]	f_{PLLI}	PLLMUL = 0	PLLDIV0 = 0	3.92	4.0	4.08	MHz
			PLLDIV0 = 1	7.84	8.0	8.16	MHz
		PLLMUL = 1	PLLDIV0 = 0	3.92	4.0	4.08	MHz
			PLLDIV0 = 1	7.84	8.0	8.16	MHz
PLL output frequency (center value)	f_{PLL}	PLLMUL = 0	PLLDIV0 = 0	f_{PLLI} × 12/2			MHz
			PLLDIV0 = 1	f_{PLLI} × 12/4			MHz
		PLLMUL = 1	PLLDIV0 = 0	f_{PLLI} × 16/2			MHz
			PLLDIV0 = 1	f_{PLLI} × 16/4			MHz
Long-term jitter[Notes 2, 3]	t_{LJ}	f_{PLL} = 24 MHz (480 counts)		-2		+2	ns
		f_{PLL} = 32 MHz (640 counts)		-2		+2	ns
		f_{PLL} = 48 MHz (960 counts)		-2		+2	ns
		f_{PLL} = 64 MHz (1280 counts)		-2		+2	ns

Notes 1. If the high-speed on-chip oscillator clock is to be selected as the PLL input clock, the minimum and maximum values will reflect the range of accuracy of the oscillation frequency by the high-speed on-chip oscillator clock.

2. Guaranteed by design, but not tested before shipment.

3. Indicates 20 μs.

34.3 DC Characteristics

34.3.1 Pin Characteristics

For the relationship between the port pins shown in the following tables and the products, refer to **CHAPTER 4 PORT FUNCTIONS**.

<R> **(T_A = -40 to +105°C, 2.7 V ≤ EV_{DD0} = EV_{DD1} = V_{DD} ≤ 5.5 V, V_{SS} = EV_{SS0} = EV_{SS1} = 0 V) (1/6)**

<R>

Items	Symbol	Conditions		MIN.	TYP.	MAX.	Unit
Output current, high[Note 1]	I_{OH1}	Per pin for P00 to P03, P10 to P17, P30 to P32, P40 to P47, P50 to P57, P60 to P67, P70 to P77, P92 to P97[Note 3], P106, P107, P120, P125 to P127, P130, P140, P150 to P157	4.0 V ≤ EV_{DD0} ≤ 5.5 V			-5.0	mA
			2.7 V ≤ EV_{DD0} < 4.0 V			-3.0	mA
		Per pin for P10, P12, P14, P30,P120,P140 (special slew rate)	4.0 V ≤ EV_{DD0} ≤ 5.5 V			-0.6	mA
			2.7 V ≤ EV_{DD0} < 4.0 V			-0.2	mA
		Total of P01, P02, P40 to P47, P92 to P97[Note 3], P120, P125 to P127, P150 to P153 (for duty factors ≤ 70%[Note 2])	4.0 V ≤ EV_{DD0} ≤ 5.5 V			-20.0	mA
			2.7 V ≤ EV_{DD0} < 4.0 V			-10.0	mA
		Total of P00, P03, P10 to P17, P30 to P32, P50 to P57, P60 to P67, P70 to P77, P106, P107, P130, P140, P154 to P157 (for duty factors ≤ 70%[Note 2])	4.0 V ≤ EV_{DD0} ≤ 5.5 V			-30.0	mA
			2.7 V ≤ EV_{DD0} < 4.0 V			-19.0	mA
		Total of all pins (for duty factors ≤ 70%[Note 2])	4.0 V ≤ EV_{DD0} ≤ 5.5 V			-50.0	mA
			2.7 V ≤ EV_{DD0} < 4.0 V			-29.0	mA
	I_{OH2}	Per pin for P33, P34, P80 to P87, P90 to P97[Note 3], P100 to P105	2.7 V ≤ V_{DD} ≤ 5.5 V			-0.1	mA
		Total of all pins (for duty factors ≤ 70%[Note 2])	2.7 V ≤ V_{DD} ≤ 5.5 V			-2.0	mA

Notes 1. Value of current at which the device operation is guaranteed even if the current flows from pins EV_{DD0}, EV_{DD1} and V_{DD} to an output pin.

2. These output current values are obtained under the condition that the duty factor is no greater than 70%. The output current values when the duty factor is changed to a value greater than 70% can be calculated from the following expression (when the duty factor is changed to n%).

- Total output current of pins (I_{OH} × 0.7)/(n × 0.01)

<Example> Where n = 80% and I_{OH} = -10.0 mA

Total output current of pins = (-10.0 × 0.7)/(80 × 0.01) ≈ -8.7 mA

However, the current that is allowed to flow into one pin does not vary depending on the duty factor. A current higher than the absolute maximum rating must not flow into one pin.

3. For pin I/O buffer power supplies, refer to **Table 4-1 Pin I/O Buffer Power Supplies**.

Caution P10 to P17, P60 to P63, P70 to P72, and P120 do not output high level in N-ch open-drain mode. P10 to P12 and P70 to P72 of the Group A products do not support N-ch open-drain mode.

Remark Unless specified otherwise, the characteristics of alternate-function pins are the same as those of the port pins.

<R> **(T_A = -40 to +105°C, 2.7 V ≤ EV_{DD0} = EV_{DD1} = V_{DD} ≤ 5.5 V, V_{SS} = EV_{SS0} = EV_{SS1} = 0 V) (2/6)**

Items	Symbol	Conditions		MIN.	TYP.	MAX.	Unit
Output current, low[Note 1]	I_{OL1}	Per pin for P00 to P03, P10 to P17, P30 to P32, P40 to P47, P50 to P57, P60 to P67, P70 to P77, P92 to P97[Note 3], P106, P107, P120, P125 to P127, P130, P140, P150 to P157	4.0 V ≤ EV_{DD0} ≤ 5.5 V			8.5	mA
			2.7 V ≤ EV_{DD0} < 4.0 V			4.0	mA
		Per pin for P10, P12, P14, P30, P120, P140 (special slew rate)	4.0 V ≤ EV_{DD0} ≤ 5.5 V			0.59	mA
			2.7 V ≤ EV_{DD0} < 4.0 V			0.07	mA
		Total of P01, P02, P40 to P47, P92 to P97[Note 3], P120, P125 to P127, P150 to P153 (for duty factors ≤ 70%[Note 2])	4.0 V ≤ EV_{DD0} ≤ 5.5 V			20.0	mA
			2.7 V ≤ EV_{DD0} < 4.0 V			15.0	mA
		Total of P00, P03, P10 to P17, P30 to P32, P50 to P57, P60 to P67, P70 to P77, P106, P107, P130, P140, P154 to P157 (for duty factors ≤ 70%[Note 2])	4.0 V ≤ EV_{DD0} ≤ 5.5 V			45.0	mA
			2.7 V ≤ EV_{DD0} < 4.0 V			35.0	mA
		Total of all pins (for duty factors ≤ 70%[Note 2])	4.0 V ≤ EV_{DD0} ≤ 5.5 V			65.0	mA
			2.7 V ≤ EV_{DD0} < 4.0 V			50.0	mA
	I_{OL2}	Per pin for P33, P34, P80 to P87, P90 to P97[Note 3], P100 to P105	2.7 V ≤ V_{DD} ≤ 5.5 V			0.4	mA
		Total of all pins (for duty factors ≤ 70%[Note 2])	2.7 V ≤ V_{DD} ≤ 5.5 V			5.0	mA

Notes 1. Value of current at which the device operation is guaranteed even if the current flows to the EV_{SS0}, EV_{SS1} and V_{SS} pins from an output pin.

2. These output current values are obtained under the condition that the duty factor is no greater than 70%. The output current values when the duty factor is changed to a value greater than 70% can be calculated from the following expression (when the duty factor is changed to n%).

- Total output current of pins $(I_{OL} \times 0.7)/(n \times 0.01)$

<Example> Where n = 80% and I_{OL} = 10.0 mA

Total output current of pins = $(10.0 \times 0.7)/(80 \times 0.01) \approx 8.7$ mA

However, the current that is allowed to flow into one pin does not vary depending on the duty factor. A current higher than the absolute maximum rating must not flow into one pin.

3. For pin I/O buffer power supplies, refer to **Table 4-1 Pin I/O Buffer Power Supplies**.

Remark Unless specified otherwise, the characteristics of alternate-function pins are the same as those of the port pins.

<R> **(T_A = -40 to +105°C, 2.7 V ≤ EV_{DD0} = EV_{DD1} = V_{DD} ≤ 5.5 V, V_{SS} = EV_{SS0} = EV_{SS1} = 0 V) (3/6)**

Items	Symbol	Conditions		MIN.	TYP.	MAX.	Unit
Input voltage, high	V_{IH1}	P00 to P03, P10 to P17, P30 to P32, P40 to P47, P50 to P57, P60 to P67, P70 to P77, P106, P107, P120, P125 to P127, P140, P150 to P157 (Schmitt 1 mode)	4.0 V ≤ EV_{DD0} ≤ 5.5 V	0.65 EV_{DD0}		EV_{DD0} Note 1	V
			2.7 V ≤ EV_{DD0} < 4.0 V	0.7 EV_{DD0}		EV_{DD0} Note 1	V
	V_{IH2}	P10, P11, P13, P14, P16, P17, P30, P43, P50, P52 to P54, P60 to P63, P70, P71, P73, P75 to P77, P107, P125, P150, P152, P153 (Schmitt 3 mode)	4.0 V ≤ EV_{DD0} ≤ 5.5 V	0.8 EV_{DD0}		EV_{DD0} Note 1	V
			2.7 V ≤ EV_{DD0} < 4.0 V	0.85 EV_{DD0}		EV_{DD0} Note 1	V
	V_{IH3}	P10, P11, P13, P14, P16, P17, P30, P54, P62, P63, P70, P71, P73, P125 (TTL mode)	4.0 V ≤ EV_{DD0} ≤ 5.5 V	2.2		EV_{DD0} Note 1	V
			2.7 V ≤ EV_{DD0} < 4.0 V	2.0		EV_{DD0} Note 1	V
	V_{IH4} Note 2	P33, P34, P80 to P87, P90 to P97, P100 to P105, P137 (fixed to Schmitt 3 mode)	4.0 V ≤ V_{DD} ≤ 5.5 V	0.8 V_{DD}		V_{DD}	V
			2.7 V ≤ V_{DD} < 4.0 V	0.85 V_{DD}		V_{DD}	V
	V_{IH5}	$\overline{\text{RESET}}$ (fixed to Schmitt 1 mode)	4.0 V ≤ V_{DD} ≤ 5.5 V	0.65 V_{DD}		V_{DD}	V
			2.7 V ≤ V_{DD} < 4.0 V	0.7 V_{DD}		V_{DD}	V
	V_{IH6}	P121 to P124, EXCLK, EXCLKS (fixed to Schmitt 2 mode)	4.0 V ≤ V_{DD} ≤ 5.5 V	0.8 V_{DD}		V_{DD}	V
			2.7 V ≤ V_{DD} < 4.0 V	0.8 V_{DD}		V_{DD}	V

Notes 1. The maximum value of V_{IH} of the pins P10 to P17, P60 to P63, P70 to P72, and P120 is EV_{DD0}, even in N-ch open-drain mode.

2. P92 to P96 of the Group A products are fixed to Schmitt 1 mode.
P96 and P97 of the Group B, C, and D products are fixed to Schmitt 1 mode.

Remark Unless specified otherwise, the characteristics of alternate-function pins are the same as those of the port pins.

<R> **(T_A = -40 to +105°C, 2.7 V ≤ EV_{DD0} = EV_{DD1} = V_{DD} ≤ 5.5 V, V_{SS} = EV_{SS0} = EV_{SS1} = 0 V) (4/6)**

Items	Symbol	Conditions		MIN.	TYP.	MAX.	Unit
Input voltage, low	V_{IL1}	P00 to P03, P10 to P17, P30 to P32, P40 to P47, P50 to P57, P60 to P67, P70 to P77, P106, P107, P120, P125 to P127, P140, P150 to P157 (Schmitt 1 mode)	4.0 V ≤ EV_{DD0} ≤ 5.5 V	0		0.35 EV_{DD0}	V
			2.7 V ≤ EV_{DD0} < 4.0 V	0		0.3 EV_{DD0}	V
	V_{IL2}	P10, P11, P13, P14, P16, P17, P30, P43, P50, P52 to P54, P60 to P63, P70, P71, P73, P75 to P77, P107, P125, P150, P152, P153 (Schmitt 3 mode)	4.0 V ≤ EV_{DD0} ≤ 5.5 V	0		0.5 EV_{DD0}	V
			2.7 V ≤ EV_{DD0} < 4.0 V	0		0.4 EV_{DD0}	V
	V_{IL3}	P10, P11, P13, P14, P16, P17, P30, P54, P62, P63, P70, P71, P73, P125 (TTL mode)	4.0 V ≤ EV_{DD0} ≤ 5.5 V	0		0.8	V
			2.7 V ≤ EV_{DD0} < 4.0 V	0		0.5	V
	V_{IL4} Note	P33, P34, P80 to P87, P90 to P97, P100 to P105, P137 (fixed to Schmitt 3 mode)	4.0 V ≤ V_{DD} ≤ 5.5 V	0		0.5 V_{DD}	V
			2.7 V ≤ V_{DD} < 4.0 V	0		0.4 V_{DD}	V
	V_{IL5}	$\overline{\text{RESET}}$ (fixed to Schmitt 1 mode)	4.0 V ≤ V_{DD} ≤ 5.5 V	0		0.35 V_{DD}	V
			2.7 V ≤ V_{DD} < 4.0 V	0		0.3 V_{DD}	V
	V_{IL6}	P121 to P124, EXCLK, EXCLKS (fixed to Schmitt 2 mode)	4.0 V ≤ V_{DD} ≤ 5.5 V	0		0.2 V_{DD}	V
			2.7 V ≤ V_{DD} < 4.0 V	0		0.2 V_{DD}	V

Note P92 to P96 of the Group A products are fixed to Schmitt 1 mode.
P96 and P97 of the Group B, C, and D products are fixed to Schmitt 1 mode.

Remark Unless specified otherwise, the characteristics of alternate-function pins are the same as those of the port pins.

<R> **(T_A = -40 to +105°C, 2.7 V ≤ EV_{DD0} = EV_{DD1} = V_{DD} ≤ 5.5 V, V_{SS} = EV_{SS0} = EV_{SS1} = 0 V) (5/6)**

Items	Symbol	Conditions		MIN.	TYP.	MAX.	Unit
Output voltage, high	V_{OH1}	P00 to P03, P10 to P17, P30 to P32, P40 to P47, P50 to P57, P60 to P67, P70 to P77, P92 to P97[Note], P106, P107, P120, P125 to P127, P130, P140, P150 to P157 (normal slew rate)	4.0 V ≤ EV_{DD0} ≤ 5.5 V, I_{OH1} = -5.0 mA	EV_{DD0}-0.9			V
			2.7 V ≤ EV_{DD0} ≤ 5.5 V, I_{OH1} = -3.0 mA	EV_{DD0}-0.7			V
			2.7 V ≤ EV_{DD0} ≤ 5.5 V, I_{OH1} = -1.0 mA	EV_{DD0}-0.5			V
	V_{OH2}	P33, P34, P80 to P87, P90 to P97[Note], P100 to P105	2.7 V ≤ V_{DD} ≤ 5.5 V I_{OH2} = -100 μA	V_{DD}-0.5			V
	V_{OH3}	P10, P12, P14, P30, P120, P140 (special slew rate)	4.0 V ≤ EV_{DD0} ≤ 5.5 V, I_{OH3} = -0.6 mA	EV_{DD0}-0.8			V
			2.7 V ≤ EV_{DD0} ≤ 5.5 V, I_{OH3} = -0.2 mA	EV_{DD0}-0.5			V
Output voltage, low	V_{OL1}	P00 to P03, P10 to P17, P30 to P32, P40 to P47, P50 to P57, P60 to P67, P70 to P77, P92 to P97[Note], P106, P107, P120, P125 to P127, P130, P140, P150 to P157 (normal slew rate)	4.0 V ≤ EV_{DD0} ≤ 5.5 V, I_{OL1} = 8.5 mA			0.7	V
			4.0 V ≤ EV_{DD0} ≤ 5.5 V, I_{OL1} = 4.0 mA			0.4	V
			2.7 V ≤ EV_{DD0} ≤ 5.5 V, I_{OL1} = 4.0 mA			0.7	V
			2.7 V ≤ EV_{DD0} ≤ 5.5 V, I_{OL1} = 1.5 mA			0.4	V
	V_{OL2}	P33, P34, P80 to P87, P90 to P97[Note], P100 to P105	2.7 V ≤ V_{DD} ≤ 5.5 V I_{OL2} = 400 μA			0.4	V
	V_{OL3}	P10, P12, P14, P30, P120, P140 (special slew rate)	4.0 V ≤ EV_{DD0} ≤ 5.5 V, I_{OL3} = 0.6 mA			0.8	V
			2.7 V ≤ EV_{DD0} ≤ 5.5 V, I_{OL3} = 0.07 mA			0.5	V

Note For pin I/O buffer power supplies, refer to **Table 4-1 Pin I/O Buffer Power Supplies**.

Caution P10 to P17, P60 to P63, P70 to P72, and P120 do not output high level in N-ch open-drain mode.

Remark Unless specified otherwise, the characteristics of alternate-function pins are the same as those of the port pins.

<R> **(T_A = -40 to +105°C, 2.7 V ≤ EV_{DD0} = EV_{DD1} = V_{DD} ≤ 5.5 V, V_{SS} = EV_{SS0} = EV_{SS1} = 0 V) (6/6)**

Items	Symbol	Conditions			MIN.	TYP.	MAX.	Unit
Input leakage current, high	I_{LIH1}	P00 to P03, P10 to P17, P30 to P32, P40 to P47, P50 to P57, P60 to P67, P70 to P77, P92 to P97[Note], P106, P107, P120, P125 to P127, P140, P150 to P157	V_I = EV_{DD0}				1	μA
	I_{LIH2}	P33, P34, P80 to P87, P90 to P97[Note], P100 to P105, P137, $\overline{RESET}$	V_I = V_{DD}				1	μA
	I_{LIH3}	P121 to P124 (X1, X2, XT1, XT2, EXCLK, EXCLKS)	V_I = V_{DD}	In input port or external clock input			1	μA
				In resonator connection			10	μA
Input leakage current, low	I_{LIL1}	P00 to P03, P10 to P17, P30 to P32, P40 to P47, P50 to P57, P60 to P67, P70 to P77, P92 to P97[Note], P106, P107, P120, P125 to P127, P140, P150 to P157	V_I = EV_{SS0}				-1	μA
	I_{LIL2}	P33, P34, P80 to P87, P90 to P97[Note], P100 to P105, P137, $\overline{RESET}$	V_I = V_{SS}				-1	μA
	I_{LIL3}	P121 to P124 (X1, X2, XT1, XT2, EXCLK, EXCLKS)	V_I = V_{SS}	In input port or external clock input			-1	μA
				In resonator connection			-10	μA
On-chip pull-up resistance	R_U	P00 to P03, P10 to P17, P30 to P32, P40 to P47, P50 to P57, P60 to P67, P70 to P77, P92 to P97, P100 to P107, P120, P125 to P127, P140, P150 to P157	V_I = EV_{SS0}, in input port		10	20	100	kΩ

Note For pin I/O buffer power supplies, refer to **Table 4-1 Pin I/O Buffer Power Supplies**.

Caution P10 to P17, P60 to P63, P70 to P72, and P120 do not output high level in N-ch open-drain mode.

Remark Unless specified otherwise, the characteristics of alternate-function pins are the same as those of the port pins.

34.3.2 Supply Current Characteristics

(T_A = -40 to +105°C, 2.7 V ≤ EV_{DD0} = EV_{DD1} = V_{DD} ≤ 5.5 V, V_{SS} = EV_{SS0} = EV_{SS1} = 0 V) (1/3)

Items	Symbol	Conditions					MIN.	TYP.	MAX.	Unit
Supply current[Note 1]	I_{DD1}	Operating mode	Normal operation [Note 2]	High-speed on-chip oscillator clock operation	f_{IH} = 64 MHz	f_{CLK} = 32 MHz [Notes 3, 4]		6.5	14.0	mA
					f_{IH} = 32 MHz	f_{CLK} = f_{IH} [Notes 3, 4]		6.1	13.0	mA
					f_{IH} = 1 MHz	f_{CLK} = f_{IH} [Notes 3, 4]		1.0	2.5	mA
				Resonator operation	f_{MX} = 20 MHz	f_{CLK} = f_{MX} [Notes 3, 5]		4.2	9.0	mA
					f_{MX} = 1 MHz	f_{CLK} = f_{MX} [Notes 3, 5]		0.9	2.5	mA
				Resonator operation (PLL operation) (PLL input clock = f_{MX})	f_{PLL} = 64 MHz, f_{MX} = 8 MHz	f_{CLK} = 32 MHz [Notes 3, 6]		6.4	14.0	mA
					f_{PLL} = 32 MHz, f_{MX} = 8 MHz	f_{CLK} = 32 MHz [Notes 3, 6]		6.3	13.5	mA
					f_{PLL} = 32 MHz, f_{MX} = 4 MHz	f_{CLK} = 32 MHz [Notes 3, 6]		6.1	13.0	mA
				Subsystem clock operation	f_{SUB} = 32.768 kHz	f_{CLK} = f_{SUB} [Note 7]				
						Groups A to D		6.0	50.0	μA
						Group E		6.0	70.0	μA
				Low-speed on-chip oscillator clock operation	f_{IL} = 15 kHz	f_{CLK} = f_{IL} [Note 8]				
						Groups A to D		3.0	40.0	μA
						Group E		3.0	60.0	μA

Notes 1. Total current flowing into V_{DD} and EV_{DD0}, including the input leakage current flowing when the level of the input pin is fixed to V_{DD}, EV_{DD0}, V_{SS}, or EV_{SS0}. However, not including the current flowing into the I/O buffer and on-chip pull-up/pull-down resistors.

2. Current drawn when all the CPU instructions are executed.

3. The values below the MAX. column include the peripheral operation current (except for background operation (BGO)). However, the LVD circuit, A/D converter, D/A converter, and comparator are stopped.

4. When high-speed system clock, subsystem clock, PLL clock, and low-speed on-chip oscillator clock are stopped.

5. When subsystem clock, PLL clock, high-speed on-chip oscillator clock, and low-speed on-chip oscillator clock are stopped.

6. When subsystem clock, high-speed on-chip oscillator clock, and low-speed on-chip oscillator clock are stopped.

7. When high-speed system clock, PLL clock, high-speed on-chip oscillator clock, and low-speed on-chip oscillator are stopped.

8. When high-speed system clock, subsystem clock, PLL clock, and high-speed on-chip oscillator clock are stopped.

Remarks 1. f_{MX}: High-speed system clock frequency

2. f_{SUB}: Subsystem clock frequency

3. f_{PLL}: PLL clock frequency

4. f_{IH}: High-speed on-chip oscillator clock frequency

5. f_{IL}: Low-speed on-chip oscillator clock frequency

6. f_{CLK}: CPU/peripheral hardware clock frequency

(T_A = -40 to +105°C, 2.7 V ≤ EV_{DD0} = EV_{DD1} = V_{DD} ≤ 5.5 V, V_{SS} = EV_{SS0} = EV_{SS1} = 0 V) (2/3)

Items	Symbol	Conditions					MIN.	TYP.	MAX.	Unit
<R> Supply current[Notes 1, 3]	I_{DD2}	HALT mode[Note 2]		High-speed on-chip oscillator clock operation	f_{IH} = 64 MHz	f_{CLK} = 32 MHz[Note 5]		1.2	10.0	mA
<R>					f_{IH} = 32 MHz	f_{CLK} = f_{IH}[Note 5]		1.0	9.0	mA
<R>					f_{IH} = 1 MHz	f_{CLK} = f_{IH}[Note 5]		0.3	1.5	mA
<R>				Resonator operation	f_{MX} = 20 MHz	f_{CLK} = f_{MX}[Note 6]		0.6	6.0	mA
<R>					f_{MX} = 1 MHz	f_{CLK} = f_{MX}[Note 6]		0.2	1.5	mA
<R>				Resonator operation (PLL operation) (PLL input clock = f_{MX})	f_{PLL} = 64 MHz, f_{MX} = 8 MHz	f_{CLK} = 32 MHz[Note 7]		1.1	10.0	mA
<R>					f_{PLL} = 32 MHz, f_{MX} = 8 MHz	f_{CLK} = 32 MHz[Note 7]		1.0	9.5	mA
<R>					f_{PLL} = 32 MHz, f_{MX} = 4 MHz	f_{CLK} = 32 MHz[Note 7]		0.8	9.0	mA
<R>				Subsystem clock operation	f_{SUB} = 32.768 kHz	f_{CLK} = f_{SUB}[Note 8]				
					Groups A to D			0.7	45.0	μA
					Group E			0.7	65.0	
<R>				Low-speed on-chip oscillator clock operation	f_{IL} = 15 kHz	f_{CLK} = f_{IL}[Note 9]				
					Groups A to D			0.7	35.0	μA
					Group E			0.7	55.0	
	I_{DD3}	STOP mode[Note 4]		T_A = +25°C	Groups A to D			0.5		μA
<R>					Group E			0.5		
				T_A = +50°C	Groups A to D				2.5	
					Group E				4.5	
				T_A = +70°C	Groups A to D				4.5	
					Group E				8.0	
				T_A = +105°C	Groups A to D				30.0	
					Group E				50.0	

Notes 1. Total current flowing into V_{DD} and EV_{DD0}, including the input leakage current flowing when the level of the input pin is fixed to V_{DD}, EV_{DD0}, V_{SS}, or EV_{SS0}. However, not including the current flowing into the I/O buffer and on-chip pull-up/pull-down resistors.

2. When HALT mode is entered during fetch from the flash memory.

3. The values below the MAX. column include the peripheral operation current and STOP leakage current. However, the watchdog timer, LVD circuit, A/D converter, D/A converter, and comparator are stopped

<R>

4. When high-speed system clock, subsystem clock, PLL clock, high-speed on-chip oscillator clock, and low-speed on-chip oscillator clock are stopped.

5. When high-speed system clock, subsystem clock, PLL clock, and low-speed on-chip oscillator clock are stopped.

6. When subsystem clock, PLL clock, high-speed on-chip oscillator clock, and low-speed on-chip oscillator clock are stopped.

7. When subsystem clock, high-speed on-chip oscillator clock, and low-speed on-chip oscillator clock are stopped.

8. When high-speed system clock, PLL clock, high-speed on-chip oscillator clock, and low-speed on-chip oscillator clock are stopped.
9. When high-speed system clock, subsystem clock, PLL clock, and high-speed on-chip oscillator clock are stopped.

Remarks 1. f_{MX}: High-speed system clock frequency
2. f_{SUB}: Subsystem clock frequency
3. f_{PLL}: PLL clock frequency
4. f_{IH}: High-speed on-chip oscillator clock frequency
5. f_{IL}: Low-speed on-chip oscillator clock frequency
6. f_{CLK}: CPU/peripheral hardware clock frequency

(T_A = -40 to +105°C, 2.7 V ≤ EV_{DD0} = EV_{DD1} = V_{DD} ≤ 5.5 V, V_{SS} = EV_{SS0} = EV_{SS1} = 0 V) (3/3)

Items	Symbol	Conditions				MIN.	TYP.	MAX.	Unit
Supply current[Notes 1, 2]	I_{SNOZ}	SNOOZE mode	A/D converter operation	During mode transition			1.0	1.2	mA
				During conversion	Low-voltage mode AV_{REFP} = V_{DD} = 5.0 V		2.1	2.5	mA
			DTC operation				4.5		mA

Notes 1. Total current flowing into V_{DD} and EV_{DD0}, including the input leakage current flowing when the level of the input pin is fixed to V_{DD}, EV_{DD0}, V_{SS}, or EV_{SS0}. However, not including the current flowing into the I/O buffer and on-chip pull-up/pull-down resistors.

2. The values below the MAX. column include the STOP leakage current.

(T_A = -40 to +105°C, 2.7 V ≤ EV_{DD0} = EV_{DD1} = V_{DD} ≤ 5.5 V, V_{SS} = EV_{SS0} = EV_{SS1} = 0 V)

Parameter	Symbol	Conditions		MIN.	TYP.	MAX.	Unit
Window watchdog timer operating current	I_{WDT} Notes 1, 2	f_{IL} = 15 kHz			0.22		μA
A/D converter operating current	I_{ADC} Note 3	When conversion at maximum speed	Normal mode, AV_{REFP} = V_{DD} = 5.0 V		1.3	1.7	mA
		When internal reference voltage is selected Note 5			75.0		μA
LVD operating current	I_{LVD} Note 4				0.08		μA
Temperature sensor operating current	I_{TMPS}				75.0		μA
D/A converter operating current	I_{DAC}	Per channel			0.8	1.5	mA
Comparator operating current	I_{CMP}				50.0		μA
BGO operating current	I_{BGO} Note 6				2.50	12.20	mA

Notes 1. When the high-speed on-chip oscillator clock and high-speed system clock are stopped.

<R> **2.** Current flowing only to the watchdog timer (including the operation current of the 15 kHz on-chip oscillator). The current value is the sum of I_{DD1}, I_{DD2}, or I_{DD3} and I_{WDT} when the watchdog timer operates in STOP mode.

3. Current flowing only to the A/D converter. The current value is the sum of I_{DD1} or I_{DD2} and I_{ADC} when the A/D converter operates in operation mode or HALT mode.

4. Current flowing only to the LVD circuit. The current value is the sum of I_{DD1}, I_{DD2}, or I_{DD3} and I_{LVD} when the LVD circuit operates in operation mode, HALT mode, or STOP mode.

5. Operating current that increases when the internal reference voltage is selected. This current flows even when conversion is stopped.

6. Current increased by the BGO operation. The current value is the sum of I_{DD1} or I_{DD2} and I_{BGO} when the BGO operates in operation mode or HALT mode.

34.4 AC Characteristics

34.4.1 Basic Operation

(T_A = -40 to +105°C, 2.7 V ≤ EV_{DD0} = EV_{DD1} = V_{DD} ≤ 5.5 V, V_{SS} = EV_{SS0} = EV_{SS1} = 0 V) (1/2)

Parameter	Symbol	Conditions		MIN.	TYP.	MAX.	Unit
Instruction cycle (minimum instruction execution time)	T_{CY}	High-speed on-chip oscillator clock operation		0.03125		1	μs
		High-speed system clock operation		0.05		1	μs
		PLL clock operation		0.03125		1	μs
		Subsystem clock operation		28.5	30.5	34.5	μs
		Low-speed on-chip oscillator clock operation			66.6		μs
		In self programming mode		0.03125		1	μs
CPU/peripheral hardware clock frequency	f_{CLK}			0.03125		66.6	μs
External system clock frequency	f_{EX}			1.0		20.0	MHz
	f_{EXS}			29		35	kHz
External system clock input high-level width, low-level width	t_{EXH}, t_{EXL}			24			ns
	t_{EXHS}, t_{EXLS}			13.7			μs
TI00 to TI07, TI10 to TI17 input high-level width, low-level width	t_{TIH}, t_{TIL}			$1/f_{MCK}+10$			ns
TO00 to TO07, TO10 to TO17 output frequency	f_{TO}	All TO pins, Normal slew rate, C = 30 pF	4.0 V ≤ EV_{DD0} ≤ 5.5 V			16	MHz
			2.7 V ≤ EV_{DD0} < 4.0 V			8	MHz
		TO01, TO06, TO07, TO11, TO13 only, Special slew rate, C = 30 pF				2	MHz
PCLBUZ0 output frequency	f_{PCL}	Normal slew rate C = 30 pF	4.0 V ≤ EV_{DD0} ≤ 5.5 V			16	MHz
			2.7 V ≤ EV_{DD0} < 4.0 V			8	MHz
		Special slew rate C = 30 pF				2	MHz
Timer RJ input cycle	t_C	TRJIO0		100			ns
Timer RJ input high-level width, low-level width	t_{WH}, t_{WL}	TRJIO0		40			ns
Interrupt input high-level width, low-level width	t_{INTH}, t_{INTL}	INTP0 to INTP13 Note		1			μs
KR0 to KR7 key interrupt input low-level width	t_{KR}			250			ns
$\overline{RESET}$ low-level width	t_{RSL}			10			μs

Note Pins $\overline{RESET}$, INTP0 to INTP3, INTP12, and INTP13 have noise filters for transient levels lasting less than 100 ns.

Caution Excluding the error in oscillation frequency accuracy.

Remark f_{MCK}: Timer array unit operation clock frequency

(T_A = -40 to +105°C, 2.7 V ≤ EV_{DD0} = EV_{DD1} = V_{DD} ≤ 5.5 V, V_{SS} = EV_{SS0} = EV_{SS1} = 0 V) (2/2)

Parameter	Symbol	Conditions		MIN.	TYP.	MAX.	Unit
Port output rise time, port output fall time	t_{RO}, t_{FO}	P00 to P03, P10 to P17, P30 to P32, P40 to P47, P50 to P57, P60 to P67, P70 to P77, P96, P97, P106, P107, P120, P125 to P127, P130, P140, P150 to P157 (normal slew rate) C = 30 pF	4.0 V ≤ EV_{DD0} ≤ 5.5 V			25	ns
			2.7 V ≤ EV_{DD0} < 4.0 V			55	ns
		P10, P12, P14, P30, P120, P140 (special slew rate) C = 30 pF	4.0 V ≤ EV_{DD0} ≤ 5.5 V		25 Note	60	ns
			2.7 V ≤ EV_{DD0} < 4.0 V			100	ns

Note T_A = +25°C, EV_{DD0} = 5.0 V

Caution Excluding the error in oscillation frequency accuracy.

Remark f_{MCK}: Timer array unit operation clock frequency

AC Timing Test Points

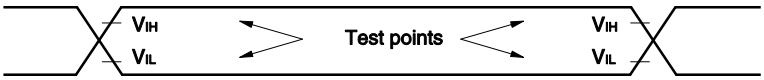

External System Clock Timing

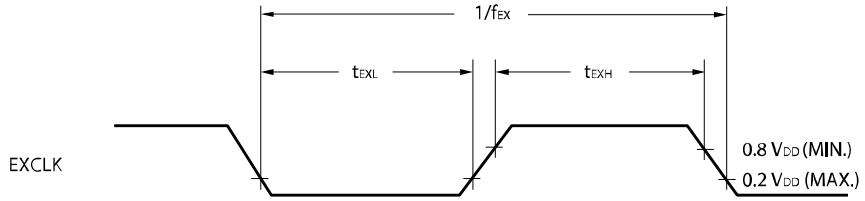

<R>

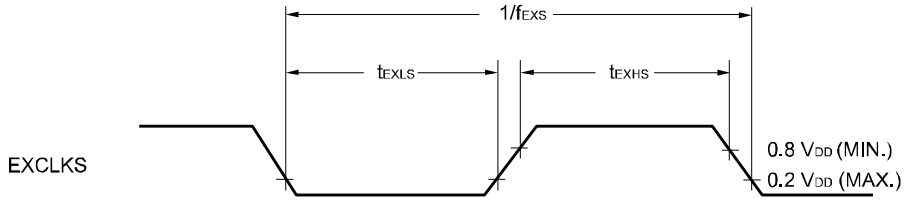

TI/TO Timing

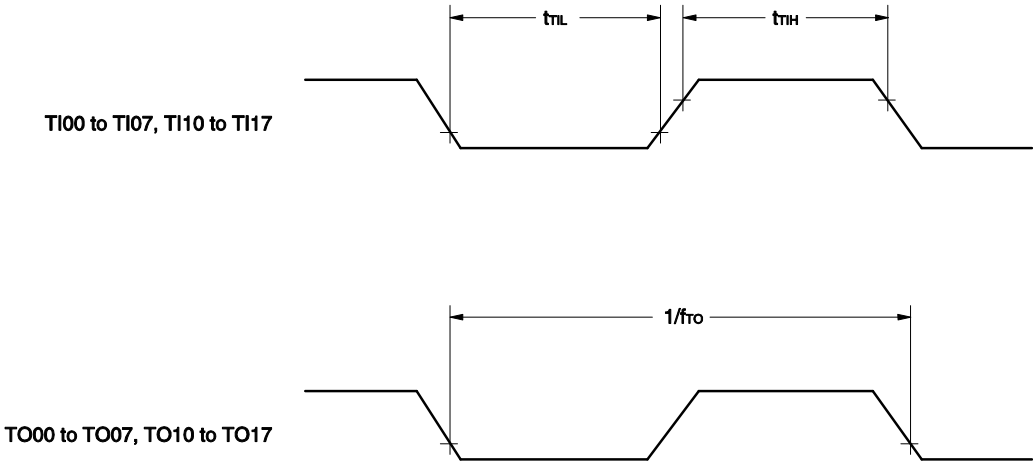

Interrupt Request Input Timing

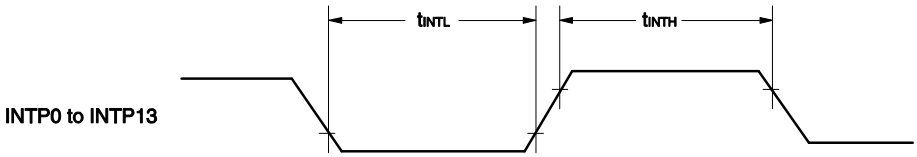

Key Interrupt Input Timing

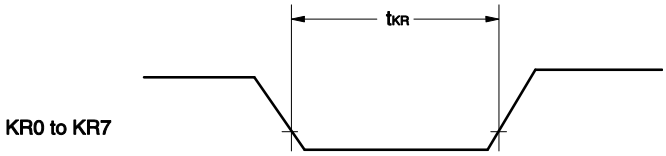

$\overline{\text{RESET}}$ Input Timing

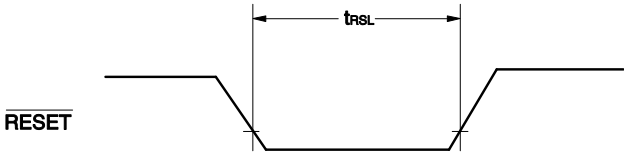

Output Rising and Falling Timing

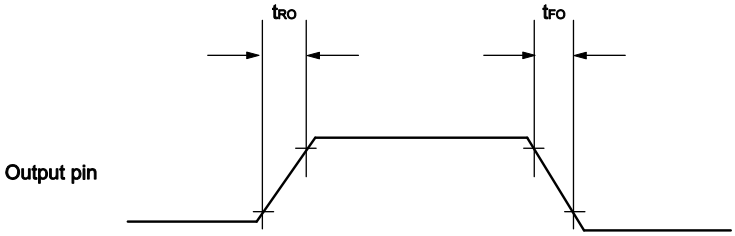

34.5 Peripheral Functions Characteristics

34.5.1 Serial Array Unit

(1) During communication at same potential (UART mode) (dedicated baud rate generator output)

(T_A = -40 to +105°C, 2.7 V ≤ EV_{DD0} = EV_{DD1} = V_{DD} ≤ 5.5 V, V_{SS} = EV_{SS0} = EV_{SS1} = 0 V)

Parameter	Symbol	Conditions		MIN.	TYP.	MAX.	Unit
Transfer rate	-					f_{MCK}/6	bps
		f_{CLK} = 32 MHz, f_{MCK} = f_{CLK}	Normal slew rate			5.3	Mbps
			Special slew rate			2	Mbps

UART mode connection diagram (during communication at same potential)

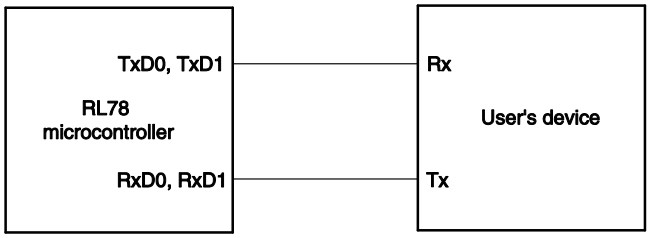

UART mode bit width (during communication at same potential) (reference)

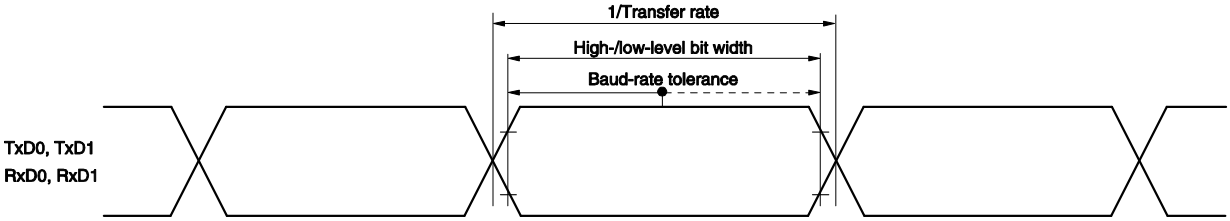

Caution Select the normal input buffer for the RxD0 pin and RxD1 pin and normal output mode for the TxD0 pin and TxD1 pin.

Remark f_{MCK}: Serial array unit operation clock frequency

(2) During communication at same potential (CSI mode) (master mode, $\overline{SCKp}$ … internal clock output, normal slew rate)

(T_A = -40 to +105°C, 2.7 V ≤ EV_{DD0} = EV_{DD1} = V_{DD} ≤ 5.5 V, V_{SS} = EV_{SS0} = EV_{SS1} = 0 V)

Parameter	Symbol	Conditions	MIN.	TYP.	MAX.	Unit
$\overline{SCKp}$ cycle time	t_{KCY1}		125 Note 5			ns
$\overline{SCKp}$ high-level width, low-level width	t_{KH1}, t_{KL1}	4.0 V ≤ EV_{DD0} ≤ 5.5 V	t_{KCY1}/2 – 12			ns
		2.7 V ≤ EV_{DD0} < 4.0 V	t_{KCY1}/2 – 18			ns
SIp setup time (to $\overline{SCKp}$↑) Note 1	t_{SIK1}	4.0 V ≤ EV_{DD0} ≤ 5.5 V	44			ns
		2.7 V ≤ EV_{DD0} < 4.0 V	55			ns
SIp hold time (from $\overline{SCKp}$↑) Note 2	t_{KSI1}		30			ns
Delay time from $\overline{SCKp}$↓ to SOp output Note 3	t_{KSO1}	C = 30 pF Note 4			40	ns

Notes 1. When DAPmn = 0 and CKPmn = 0, or DAPmn = 1 and CKPmn = 1. The SIp setup time becomes "to $\overline{SCKp}$↓" when DAPmn = 0 and CKPmn = 1 or DAPmn = 1 and CKPmn = 0.

2. When DAPmn = 0 and CKPmn = 0 or DAPmn = 1 and CKPmn = 1. The SIp hold time becomes "from $\overline{SCKp}$↓" when DAPmn = 0 and CKPmn = 1 or DAPmn = 1 and CKPmn = 0.

3. When DAPmn = 0 and CKPmn = 0, or DAPmn = 1 and CKPmn = 1. The delay time to SOp output becomes "from $\overline{SCKp}$↑" when DAPmn = 0 and CKPmn = 1, or DAPmn = 1 and CKPmn = 0.

4. C is the load capacitance of the $\overline{SCKp}$ and SOp output lines.

5. t_{KCY1} ≥ 4/f_{CLK} must also be satisfied.

Caution Select the normal input buffer for the SIp pin and normal output mode for the SOp pin and $\overline{SCKp}$ pin.

Remark p: CSIp (p = 00, 01, 10, 11), m: Unit m (m = 0, 1), n: Channel n (n = 0, 1)

(3) During communication at same potential (CSI mode) (master mode, $\overline{\text{SCKp}}$ … internal clock output, special slew rate)

(T_A = -40 to +105°C, 4.0 V ≤ EV_{DD0} = EV_{DD1} = V_{DD} ≤ 5.5 V, V_{SS} = EV_{SS0} = EV_{SS1} = 0 V)

Parameter	Symbol	Conditions	MIN.	TYP.	MAX.	Unit
$\overline{\text{SCKp}}$ cycle time	t_{KCY1}		500 Note 5			ns
$\overline{\text{SCKp}}$ high-level width, low-level width	t_{KH1}, t_{KL1}		t_{KCY1}/2 – 60			ns
SIp setup time (to $\overline{\text{SCKp}}$↑) Note 1	t_{SIK1}		120			ns
SIp hold time (from $\overline{\text{SCKp}}$↑) Note 2	t_{KSI1}		80			ns
Delay time from $\overline{\text{SCKp}}$↓ to SOp output Note 3	t_{KSO1}	C = 30 pF Note 4			90	ns

Notes 1. When DAPmn = 0 and CKPmn = 0, or DAPmn = 1 and CKPmn = 1. The SIp setup time becomes "to $\overline{\text{SCKp}}$↓" when DAPmn = 0 and CKPmn = 1 or DAPmn = 1 and CKPmn = 0.

2. When DAPmn = 0 and CKPmn = 0 or DAPmn = 1 and CKPmn = 1. The SIp hold time becomes "from $\overline{\text{SCKp}}$↑" when DAPmn = 0 and CKPmn = 1 or DAPmn = 1 and CKPmn = 0.

3. When DAPmn = 0 and CKPmn = 0, or DAPmn = 1 and CKPmn = 1. The delay time to SOp output becomes "from $\overline{\text{SCKp}}$↑" when DAPmn = 0 and CKPmn = 1, or DAPmn = 1 and CKPmn = 0.

4. C is the load capacitance of the $\overline{\text{SCKp}}$ and SOp output lines.

5. t_{KCY1} ≥ 4/f_{CLK} must also be satisfied.

Caution Select the normal input buffer for the SIp pin and normal output mode and special slew rate for the SOp pin and $\overline{\text{SCKp}}$ pin.

Remark p: CSIp (p = 00, 01, 10, 11), m: Unit m (m = 0, 1), n: Channel n (n = 0, 1)

(4) During communication at same potential (CSI mode) (slave mode, $\overline{SCKp}$ … external clock input, normal slew rate)

(T_A = -40 to +105°C, 2.7 V ≤ EV_{DD0} = EV_{DD1} = V_{DD} ≤ 5.5 V, V_{SS} = EV_{SS0} = EV_{SS1} = 0 V)

Parameter	Symbol	Conditions		MIN.	TYP.	MAX.	Unit
$\overline{SCKp}$ cycle time	t_{KCY2}			8/f_{MCK}			ns
$\overline{SCKp}$ high-level width, low-level width	t_{KH2}, t_{KL2}			t_{KCY2}/2			ns
SIp setup time (to $\overline{SCKp}$↑)Note 1	t_{SIK2}			1/f_{MCK} + 20			ns
SIp hold time (from $\overline{SCKp}$↑)Note 2	t_{KSI2}			1/f_{MCK} + 31			ns
Delay time from $\overline{SCKp}$↓ to SOp outputNote 3	t_{KSO2}	C = 30 pFNote 4	4.0V ≤ V_{DD} = EV_{DD0} = EV_{DD1} ≤ 5.5V			2/f_{MCK} + 44	ns
			2.7V ≤ V_{DD} = EV_{DD0} = EV_{DD1} < 4.0V			2/f_{MCK} + 57	ns
$\overline{SSIp}$ setup time	t_{SSIK}	DAP = 0		120			ns
		DAP = 1		1/f_{MCK} + 120			ns
$\overline{SSIp}$ hold time	t_{KSSI}	DAP = 0		1/f_{MCK} + 120			ns
		DAP = 1		120			ns

Notes 1. When DAPmn = 0 and CKPmn = 0, or DAPmn = 1 and CKPmn = 1. The SIp setup time becomes "to $\overline{SCKp}$↓" when DAPmn = 0 and CKPmn = 1 or DAPmn = 1 and CKPmn = 0.

2. When DAPmn = 0 and CKPmn = 0 or DAPmn = 1 and CKPmn = 1. The SIp hold time becomes "from $\overline{SCKp}$↓" when DAPmn = 0 and CKPmn = 1 or DAPmn = 1 and CKPmn = 0.

3. When DAPmn = 0 and CKPmn = 0, or DAPmn = 1 and CKPmn = 1. The delay time to SOp output becomes "from $\overline{SCKp}$↑" when DAPmn = 0 and CKPmn = 1, or DAPmn = 1 and CKPmn = 0.

4. C is the load capacitance of the $\overline{SCKp}$ and SOp output lines.

Caution Select the normal input buffer for the SIp, $\overline{SCKp}$ and $\overline{SSIp}$ pins and normal output mode for the SOp pin.

Remarks 1. p: CSIp (p = 00, 01, 10, 11), m: Unit m (m = 0, 1), n: Channel n (n = 0, 1)

2. f_{MCK}: Serial array unit operation clock frequency

(5) During communication at same potential (CSI mode) (slave mode, $\overline{SCKp}$ … external clock input, special slew rate)

(T_A = -40 to +105°C, 4.0 V ≤ EV_{DD0} = EV_{DD1} = V_{DD} ≤ 5.5 V, V_{SS} = EV_{SS0} = EV_{SS1} = 0 V)

Parameter	Symbol	Conditions	MIN.	TYP.	MAX.	Unit
$\overline{SCKp}$ cycle time	t_{KCY2}	20 MHz < f_{MCK}	10/f_{MCK}			ns
		10 MHz < f_{MCK} ≤ 20 MHz	8/f_{MCK}			ns
		f_{MCK} ≤ 10 MHz	6/f_{MCK}			ns
$\overline{SCKp}$ high-level width, low-level width	t_{KH2}, t_{KL2}		t_{KCY2}/2			ns
SIp setup time (to $\overline{SCKp}$↑)Note1	t_{SIK2}		1/f_{MCK} + 50			ns
SIp hold time (from $\overline{SCKp}$↑)Note 2	t_{KSI2}		1/f_{MCK} + 50			ns
Delay time from $\overline{SCKp}$↓ to SOp outputNote 3	t_{KSO2}	C = 30 pFNote 4			2/f_{MCK} + 80	ns
$\overline{SSIp}$ setup time	t_{SSIK}	DAP = 0	120			ns
		DAP = 1	1/f_{MCK} + 120			ns
$\overline{SSIp}$ hold time	t_{KSSI}	DAP = 0	1/f_{MCK} + 120			ns
		DAP = 1	120			ns

Notes 1. When DAPmn = 0 and CKPmn = 0, or DAPmn = 1 and CKPmn = 1. The SIp setup time becomes "to $\overline{SCKp}$↓" when DAPmn = 0 and CKPmn = 1 or DAPmn = 1 and CKPmn = 0.

2. When DAPmn = 0 and CKPmn = 0 or DAPmn = 1 and CKPmn = 1. The SIp hold time becomes "from $\overline{SCKp}$↓" when DAPmn = 0 and CKPmn = 1 or DAPmn = 1 and CKPmn = 0.

3. When DAPmn = 0 and CKPmn = 0, or DAPmn = 1 and CKPmn = 1. The delay time to SOp output becomes "from $\overline{SCKp}$↑" when DAPmn = 0 and CKPmn = 1, or DAPmn = 1 and CKPmn = 0.

4. C is the load capacitance of the $\overline{SCKp}$ and SOp output lines.

Caution Select the normal input buffer for the SIp, $\overline{SCKp}$ and $\overline{SSIp}$ pins and normal output mode and special slew rate for the SOp pin.

Remarks 1. p: CSIp (p = 00, 01, 10, 11), m: Unit m (m = 0, 1), n: Channel n (n = 0, 1)

2. f_{MCK}: Serial array unit operation clock frequency

CSI mode connection diagram (during communication at same potential)

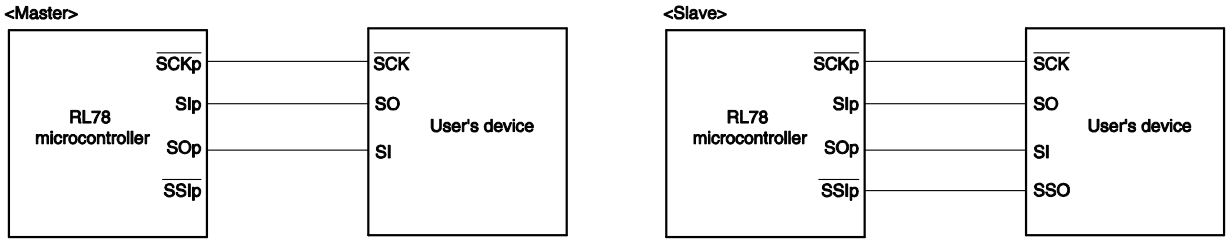

CSI mode serial transfer timing (during communication at same potential)
(When DAPmn = 0 and CKPmn = 0, or DAPmn = 1 and CKPmn = 1)

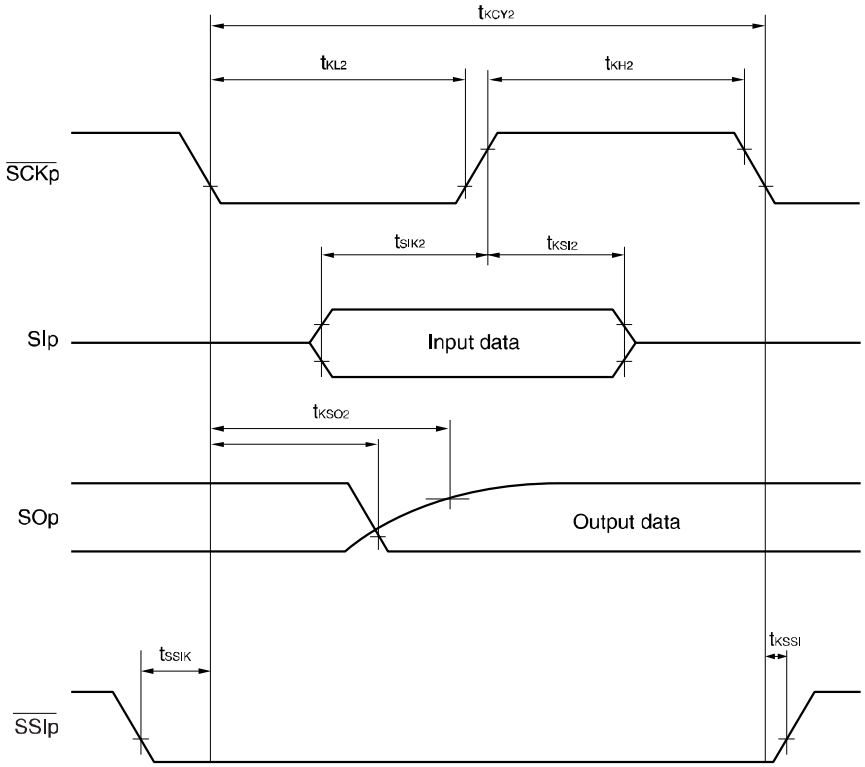

Remark p: CSIp (p = 00, 01, 10, 11), m: Unit m (m = 0, 1), n: Channel n (n = 0, 1)

CSI mode serial transfer timing (during communication at same potential)
(When DAPmn= 0 and CKPmn = 1, or DAPmn = 1 and CKPmn = 0)

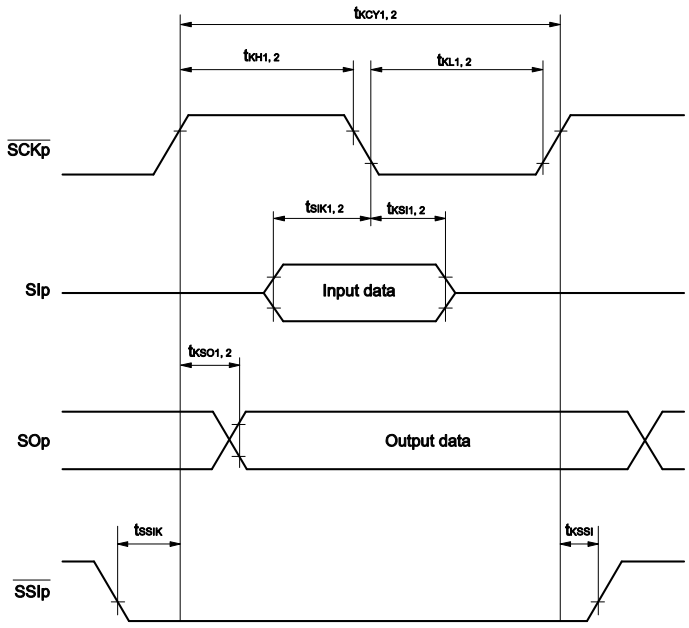

Remark p: CSIp (p = 00, 01, 10, 11), m: Unit m (m = 0, 1), n: Channel n (n = 0, 1)

(6) During communication at same potential (simplified I²C mode)
(SDAr: N-ch open-drain output (EV_{DD0} tolerance) mode, SCLr: normal output mode)

(T_A = -40 to +105°C, 2.7 V ≤ EV_{DD0} = EV_{DD1} = V_{DD} ≤ 5.5 V, V_{SS} = EV_{SS0} = EV_{SS1} = 0 V)

Parameter	Symbol	Conditions	MIN.	TYP.	MAX.	Unit
SCLr clock frequency	f_{SCL}				1000[Note]	kHz
Hold time when SCLr = "L"	t_{LOW}		475			ns
Hold time when SCLr = "H"	t_{HIGH}		475			ns
Data setup time (reception)	$t_{SU:DAT}$		$1/f_{MCK}$ + 85			ns
Data hold time (transmission)	$t_{HD:DAT}$	C_b = 50 pF, R_b = 2.7 kΩ	0		305	ns

Note $f_{CLK} \leq f_{MCK}/4$ must also be satisfied.

Simplified I²C mode connection diagram (during communication at same potential)

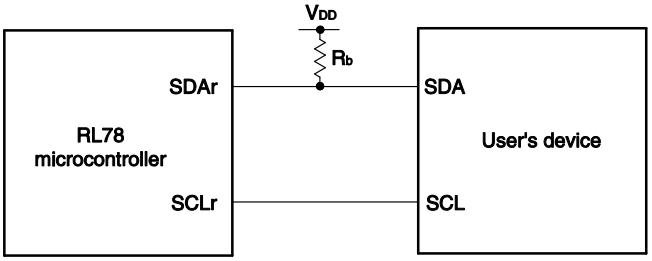

Simplified I²C mode serial transfer timing (during communication at same potential)

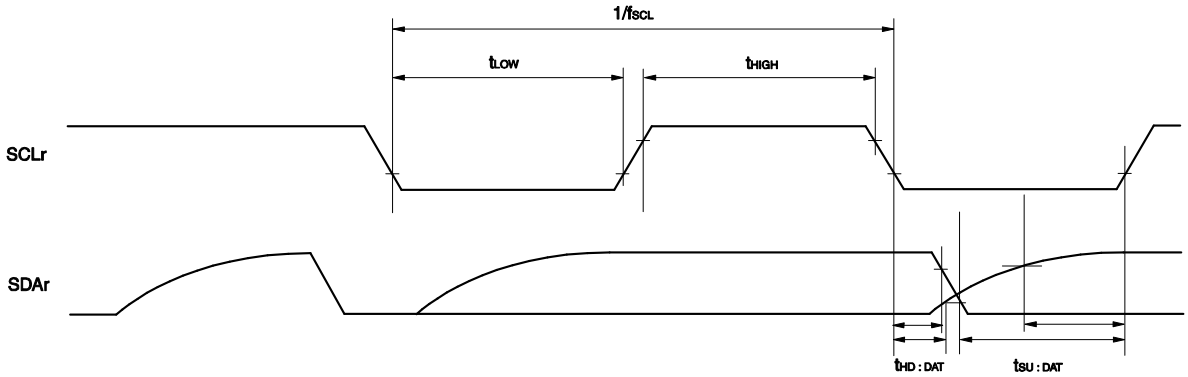

Caution Select the normal input buffer and N-ch open-drain output mode for the SDAr pin and normal output mode for the SCLr pin.

Remarks 1. R_b [Ω]: Communication line (SDAr) pull-up resistance, C_b [F]: Communication line (SCLr, SDAr) load capacitance

2. r: IICr (r = 00, 01, 10, 11)

3. f_{MCK}: Serial array unit operation clock frequency

(7) During communication at same potential (simplified I²C mode) (SDAr and SCLr: N-ch open-drain output (EV_{DD0} tolerance) mode)

(T_A = -40 to +105°C, 2.7 V ≤ EV_{DD0} = EV_{DD1} = V_{DD} ≤ 5.5 V, V_{SS} = EV_{SS0} = EV_{SS1} = 0 V)

Parameter	Symbol	Conditions	MIN.	MAX.	Unit
SCLr clock frequency	f_{SCL}			400[Note]	kHz
Hold time when SCLr = "L"	t_{LOW}	4.0 V ≤ V_{DD} ≤ 5.5 V, C_b = 100 pF, R_b = 1.7 kΩ	1300		ns
		2.7 V ≤ V_{DD} < 4.0 V, C_b = 100 pF, R_b = 2.7 kΩ			
Hold time when SCLr = "H"	t_{HIGH}	4.0 V ≤ V_{DD} ≤ 5.5 V, C_b = 100 pF, R_b = 1.7 kΩ	600		ns
		2.7 V ≤ V_{DD} < 4.0 V, C_b = 100 pF, R_b = 2.7 kΩ			
Data setup time (reception)	$t_{SU: DAT}$	4.0 V ≤ V_{DD} ≤ 5.5 V, C_b = 100 pF, R_b = 1.7 kΩ	1/f_{MCK} + 120		ns
		2.7 V ≤ V_{DD} < 4.0 V, C_b = 100 pF, R_b = 2.7 kΩ	1/f_{MCK} + 270		ns
Data hold time (transmission)	$t_{HD: DAT}$	4.0 V ≤ V_{DD} ≤ 5.5 V, C_b = 100 pF, R_b = 1.7 kΩ	0	300	ns
		2.7 V ≤ V_{DD} < 4.0 V, C_b = 100 pF, R_b = 2.7 kΩ			

Note f_{CLK} ≤ f_{MCK}/4 must also be satisfied.

Simplified I²C mode connection diagram (during communication at same potential)

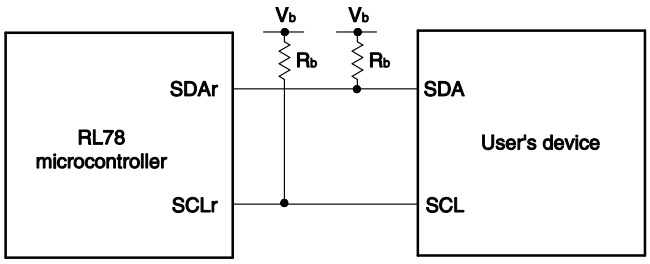

Caution Select the normal input buffer and N-ch open-drain output mode for the SDAr pin and SCLr pin.

Remarks 1. R_b [Ω]: Communication line (SDAr, SCLr) pull-up resistance, C_b [F]: Communication line (SDAr, SCLr) load capacitance, V_b[V]: Communication line voltage

2. r: IICr (r = 00, 01, 10, 11)

3. f_{MCK}: Serial array unit operation clock frequency

Simplified I²C mode serial transfer timing (during communication at same potential)

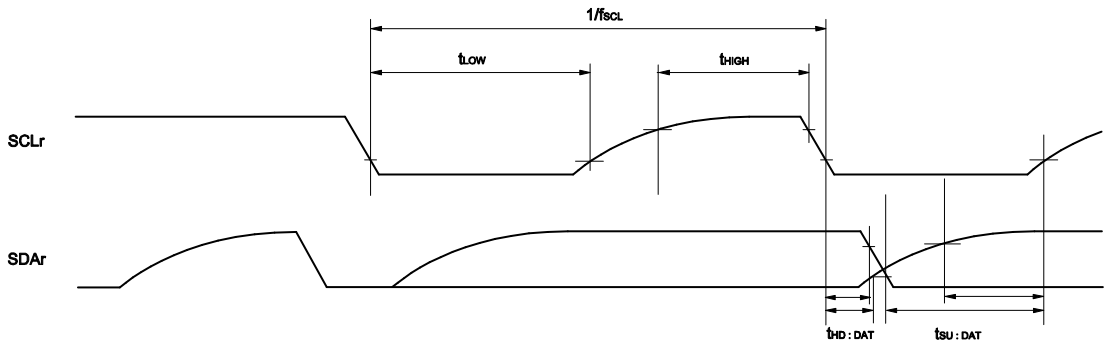

Remark r: IICr (r = 00, 01, 10, 11)

(8) Communication at different potential (UART mode) (TxD output buffer: N-ch open-drain, RxD input buffer: TTL)

(T_A = -40 to +105°C, 4.0 V ≤ EV_{DD0} = EV_{DD1} = V_{DD} ≤ 5.5 V, V_{SS} = EV_{SS0} = EV_{SS1} = 0 V)

Parameter	Symbol	Conditions			MIN.	TYP.	MAX.	Unit
Transfer rate	–	Reception	2.7 V ≤ V_b ≤ EV_{DD0}, V_{IH} = 2.2 V, V_{IL} = 0.8 V				f_{MCK}/6	bps
				Theoretical value of the maximum transfer rate Note (C_b = 30 pF)			5.3	Mbps
		Transmission	2.7 V ≤ V_b ≤ EV_{DD0}, V_{OH} = 2.2 V, V_{OL} = 0.8 V				Smaller number of the values given by f_{MCK}/6 and expression 1 is applicable.	bps
				Theoretical value of the maximum transfer rate Note (C_b = 30 pF) Normal slew rate			5.3	Mbps

Note Expression 1: Maximum transfer rate = $1 / [\{-C_b \times R_b \times \ln (1 - 2.2/V_b)\} \times 3]$

UART mode connection diagram (during communication at different potential)

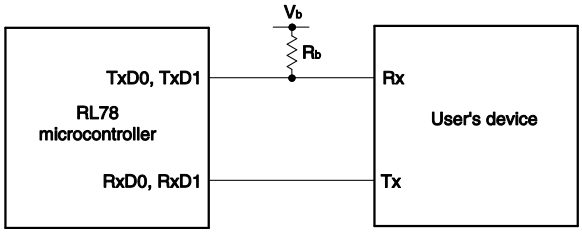

UART mode bit width (during communication at different potential) (reference)

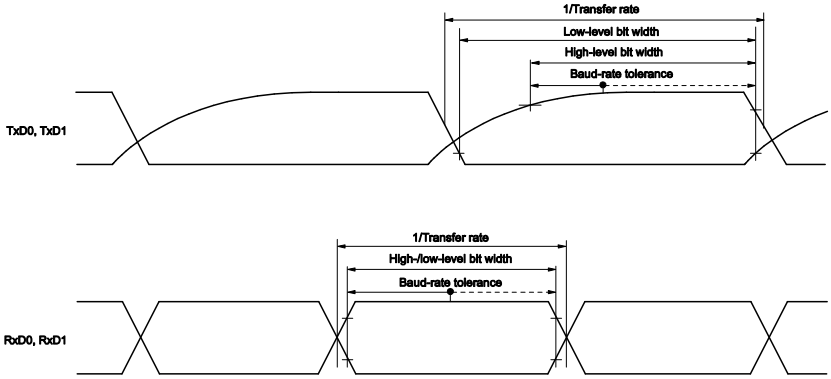

Caution Select the TTL input buffer for the RxD0 pin and RxD1 pin and N-ch open-drain output mode for the TxD0 pin and TxD1 pin.

Remarks 1. R_b [Ω]: Communication line (TxD) pull-up resistance, C_b [F]: Communication line (TxD) load capacitance, V_b [V]: Communication line voltage

2. f_{MCK}: Serial array unit operation clock frequency

(9) During communication at different potential (3-V supply system) (CSI mode) (master mode, $\overline{\text{SCKp}}$ … internal clock output, normal slew rate)

(T_A = -40 to +105°C, 4.0 V ≤ EV_{DD0} = EV_{DD1} = V_{DD} ≤ 5.5 V, V_{SS} = EV_{SS0} = EV_{SS1} = 0 V)

Parameter	Symbol	Conditions	MIN.	TYP.	MAX.	Unit
$\overline{\text{SCKp}}$ cycle time	t_{KCY1}	2.7 V ≤ V_b ≤ EV_{DD0}, C_b = 30 pF, R_b = 1.4 kΩ	400[Note3]			ns
$\overline{\text{SCKp}}$ high-level width	t_{KH1}	2.7 V ≤ V_b ≤ EV_{DD0}, C_b = 30 pF, R_b = 1.4 kΩ	t_{KCY1}/2 – 75			ns
$\overline{\text{SCKp}}$ low-level width	t_{KL1}	2.7 V ≤ V_b ≤ EV_{DD0}, C_b = 30 pF, R_b = 1.4 kΩ	t_{KCY1}/2 – 20			ns
SIp setup time (to $\overline{\text{SCKp}}$↑)[Note 1]	t_{SIK1}	2.7 V ≤ V_b ≤ EV_{DD0}, C_b = 30 pF, R_b = 1.4 kΩ	150			ns
SIp setup time (to $\overline{\text{SCKp}}$↓)[Note 2]	t_{SIK1}	2.7 V ≤ V_b ≤ EV_{DD0}, C_b = 30 pF, R_b = 1.4 kΩ	70			ns
SIp hold time (from $\overline{\text{SCKp}}$↑)[Note 1]	t_{KSI1}	2.7 V ≤ V_b ≤ EV_{DD0}, C_b = 30 pF, R_b = 1.4 kΩ	30			ns
SIp hold time (from $\overline{\text{SCKp}}$↓)[Note 2]	t_{KSI1}	2.7 V ≤ V_b ≤ EV_{DD0}, C_b = 30 pF, R_b = 1.4 kΩ	30			ns
Delay time from $\overline{\text{SCKp}}$↓ to SOp output[Note1]	t_{KSO1}	2.7 V ≤ V_b ≤ EV_{DD0}, C_b = 30 pF, R_b = 1.4 kΩ			120	ns
Delay time from $\overline{\text{SCKp}}$↑ to SOp output[Note2]	t_{KSO1}	2.7 V ≤ V_b ≤ EV_{DD0}, C_b = 30 pF, R_b = 1.4 kΩ			40	ns

Notes 1. When DAPmn = 0 and CKPmn = 0, or DAPmn = 1 and CKPmn = 1.

2. When DAPmn = 0 and CKPmn = 1, or DAPmn = 1 and CKPmn = 0.

3. t_{KCY1} ≥ 4/f_{CLK} must also be satisfied.

CSI mode connection diagram (during communication at different potential)

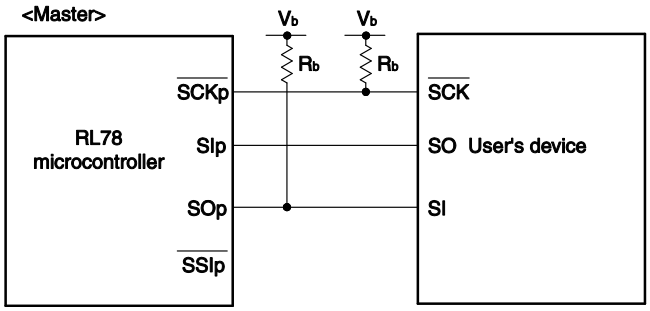

Caution Select the TTL input buffer for the SIp pin and N-ch open-drain output mode for the SOp pin and $\overline{\text{SCKp}}$ pin.

Remarks 1. R_b [Ω]: Communication line ($\overline{\text{SCKp}}$, SOp) pull-up resistance, C_b [F]: Communication line (SOp, $\overline{\text{SCKp}}$) load capacitance, V_b [V]: Communication line voltage

2. p: CSIp (p = 00, 01, 10, 11), m: Unit m (m = 0, 1), n: Channel n (n = 0, 1)

3. AC characteristics of the serial array unit during communication at different potential in CSI mode are measured with the V_{IH} and V_{IL} below:

When 4.0 V ≤ EV_{DD0} ≤ 5.5 V, 2.7 V ≤ V_b ≤ 4.0 V: V_{IH} = 2.2 V, V_{IL} = 0.8 V

CSI mode serial transfer timing (master mode) (during communication at different potential)
(When DAPmn = 0 and CKPmn = 0, or DAPmn = 1 and CKPmn = 1)

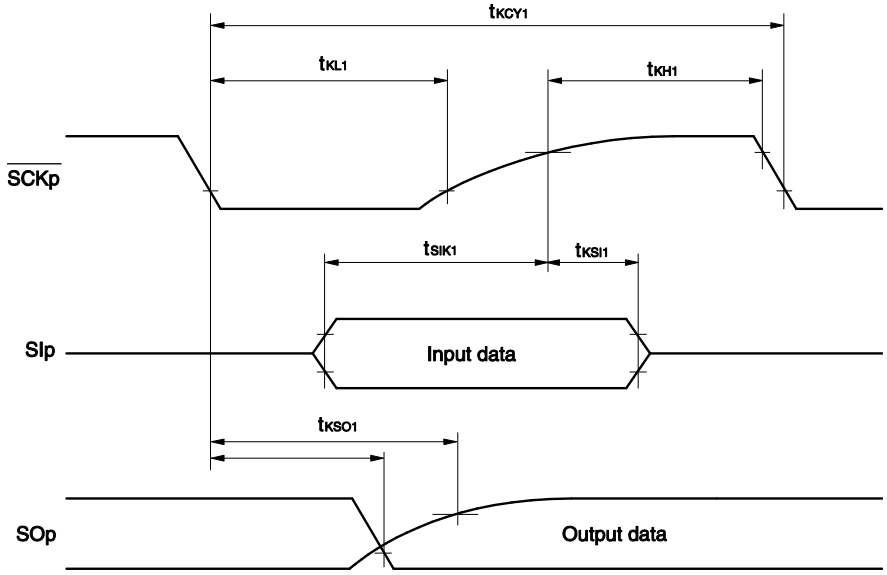

CSI mode serial transfer timing (master mode) (during communication at different potential)
(When DAPmn= 0 and CKPmn = 1, or DAPmn = 1 and CKPmn = 0)

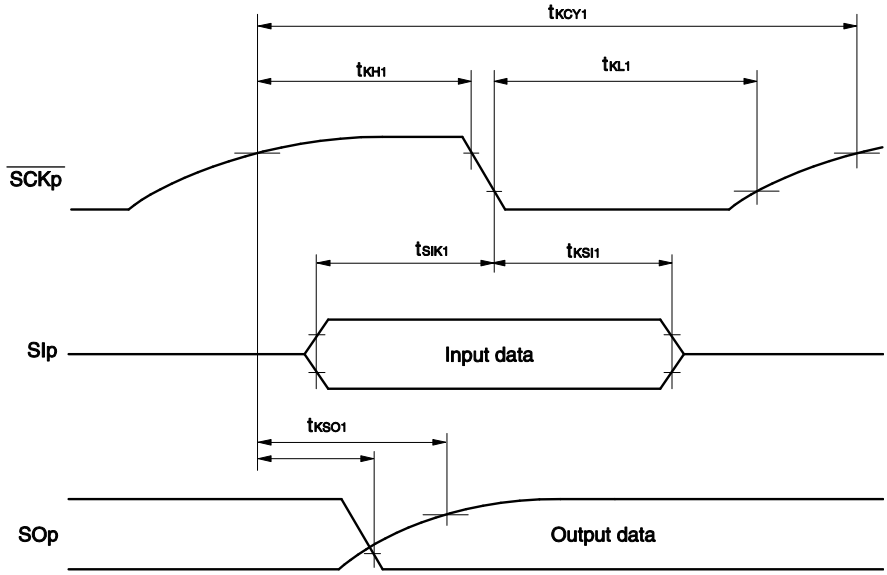

(10) During communication at different potential (3-V supply system) (CSI mode) (slave mode, $\overline{SCKp}$ … external clock input, normal slew rate)

(T_A = -40 to +105°C, 4.0 V ≤ EV_{DD0} = EV_{DD1} = V_{DD} ≤ 5.5 V, V_{SS} = EV_{SS0} = EV_{SS1} = 0 V)

Parameter	Symbol	Conditions		MIN.	TYP.	MAX.	Unit
$\overline{SCKp}$ cycle time	t_{KCY2}	2.7 V ≤ V_b ≤ V_{DD}	24 MHz < f_{MCK}	14/f_{MCK}			ns
			20 MHz < f_{MCK} ≤ 24 MHz	12/f_{MCK}			ns
			8 MHz < f_{MCK} ≤ 20 MHz	10/f_{MCK}			ns
			4 MHz < f_{MCK} ≤ 8 MHz	8/f_{MCK}			ns
			f_{MCK} ≤ 4 MHz	6/f_{MCK}			ns
$\overline{SCKp}$ high-level width, low-level width	t_{KH2}, t_{KL2}	2.7 V ≤ V_b ≤ V_{DD}		t_{KCY2}/2 – 20			ns
SIp setup time (to $\overline{SCKp}$↑)Note 1	t_{SIK2}			90			ns
SIp hold time (from $\overline{SCKp}$↑)Note 2	t_{KSI2}			1/f_{MCK} + 50			ns
Delay time from $\overline{SCKp}$↓ to SOp outputNote 3	t_{KSO2}	2.7 V ≤ V_b ≤ V_{DD}, C_b = 30 pF, R_b = 1.4 kΩ				2/f_{MCK} + 120	ns
$\overline{SSIp}$ setup time	t_{SSIK}	DAP = 0		120			ns
		DAP = 1		1/f_{MCK} + 120			ns
$\overline{SSIp}$ hold time	t_{KSSI}	DAP = 0		1/f_{MCK} + 120			ns
		DAP = 1		120			ns

Notes 1. When DAPmn = 0 and CKPmn = 0, or DAPmn = 1 and CKPmn = 1. The SIp setup time becomes "to $\overline{SCKp}$↓" when DAPmn = 0 and CKPmn = 1 or DAPmn = 1 and CKPmn = 0.

2. When DAPmn = 0 and CKPmn = 0 or DAPmn = 1 and CKPmn = 1. The SIp hold time becomes "from $\overline{SCKp}$↓" when DAPmn = 0 and CKPmn = 1 or DAPmn = 1 and CKPmn = 0.

3. When DAPmn = 0 and CKPmn = 0, or DAPmn = 1 and CKPmn = 1. The delay time to SOp output becomes "from $\overline{SCKp}$↑" when DAPmn = 0 and CKPmn = 1, or DAPmn = 1 and CKPmn = 0.

CSI mode connection diagram (during communication at different potential)

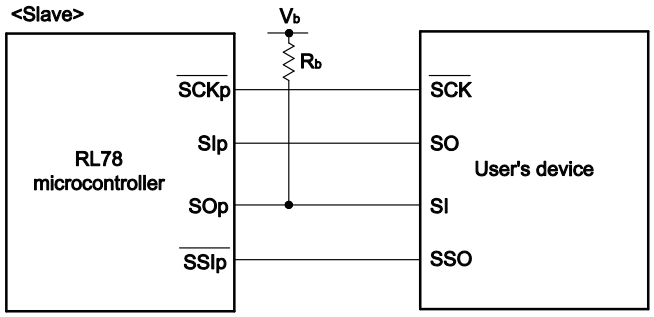

Caution Select the TTL input buffer for the SIp, $\overline{\text{SCKp}}$ and $\overline{\text{SSIp}}$ pins and N-ch open-drain output mode for the SOp pin.

Remarks 1. R_b [Ω]: Communication line (SOp) pull-up resistance, C_b [F]: Communication line (SOp) load capacitance, V_b [V]: Communication line voltage

2. p: CSIp (p = 00, 01, 10, 11), m: Unit m (m = 0, 1), n: Channel n (n = 0, 1)

3. AC characteristics of the serial array unit during communication at different potential in CSI mode are measured with the V_{IH} and V_{IL} below:

When 4.0 V ≤ EV_{DD0} ≤ 5.5 V, 2.7 V ≤ V_b ≤ 4.0 V: V_{IH} = 2.2 V, V_{IL} = 0.8 V

CSI mode serial transfer timing (slave mode) (during communication at different potential)
(When DAPmn = 0 and CKPmn = 0, or DAPmn = 1 and CKPmn = 1)

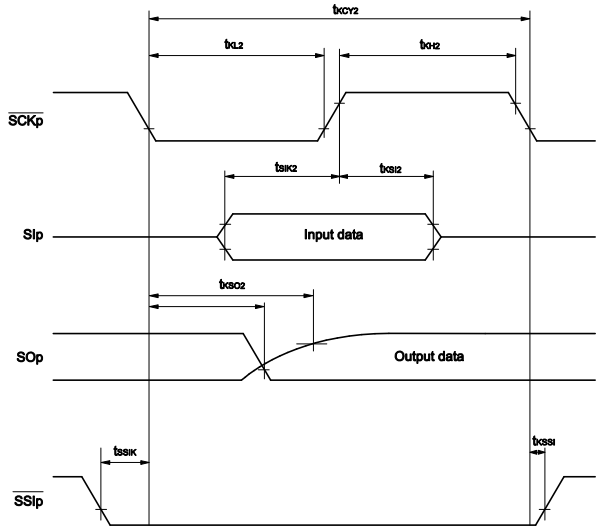

CSI mode serial transfer timing (slave mode) (during communication at different potential)
(When DAPmn= 0 and CKPmn = 1, or DAPmn = 1 and CKPmn = 0)

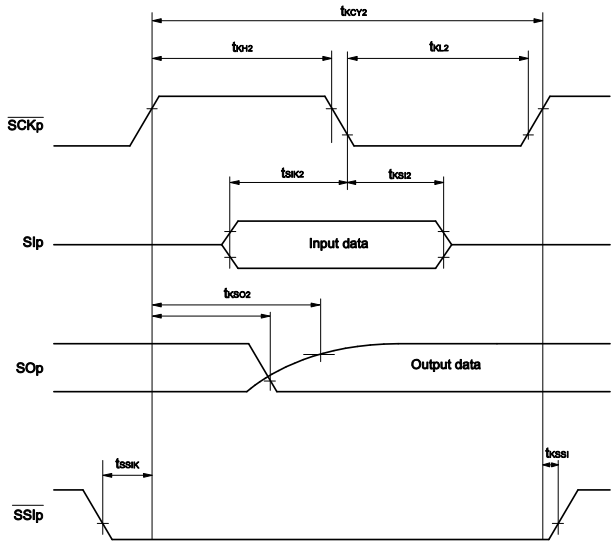

(11) During communication at different potential (3-V supply system) (simplified I²C mode)
(SDAr: TTL input buffer mode or N-ch open-drain output (EV_{DD0} tolerance) mode, SCLr: N-ch open-drain output (EV_{DD0} tolerance) mode)

(T_A = -40 to +105°C, 4.0 V ≤ EV_{DD0} = EV_{DD1} = V_{DD} ≤ 5.5 V, V_{SS} = EV_{SS0} = EV_{SS1} = 0 V)

Parameter	Symbol	Conditions	MIN.	MAX.	Unit
SCLr clock frequency	f_{SCL}	2.7 V ≤ V_b ≤ 4.0 V, C_b = 100 pF, R_b = 1.4 kΩ		400[Note]	kHz
Hold time when SCLr = "L"	t_{LOW}	2.7 V ≤ V_b ≤ 4.0 V, C_b = 100 pF, R_b = 1.4 kΩ	1200		ns
Hold time when SCLr = "H"	t_{HIGH}	2.7 V ≤ V_b ≤ 4.0 V, C_b = 100 pF, R_b = 1.4 kΩ	600		ns
Data setup time (reception)	$t_{SU:DAT}$	2.7 V ≤ V_b ≤ 4.0 V, C_b = 100 pF, R_b = 1.4 kΩ	135 + 1/f_{MCK}		ns
Data hold time (transmission)	$t_{HD:DAT}$	2.7 V ≤ V_b ≤ 4.0 V, C_b = 100 pF, R_b = 1.4 kΩ	0	140	ns

Note f_{SCL} ≤ f_{MCK}/4 must also be satisfied.

Simplified I²C mode connection diagram (during communication at different potential)

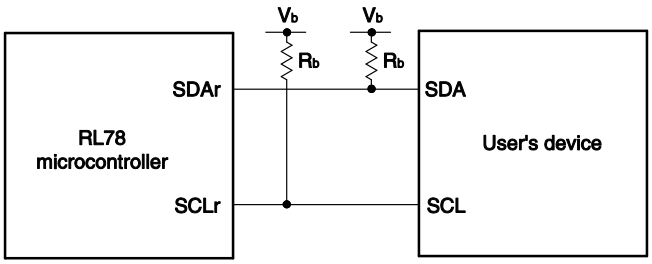

Simplified I²C mode serial transfer timing (during communication at different potential)

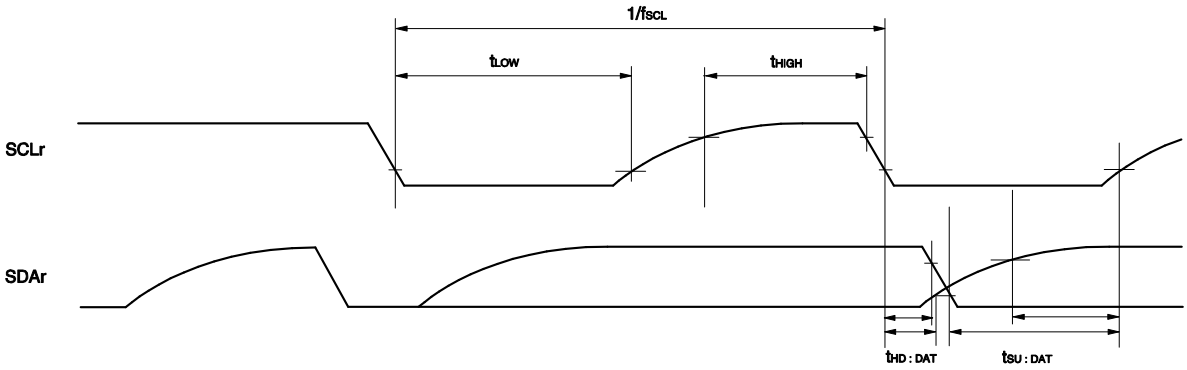

Caution Select the TTL input buffer and the N-ch open-drain output mode for the SDAr pin and N-ch open-drain output mode for the SCLr pin.

Remarks 1. R_b [Ω]: Communication line (SDAr, SCLr) pull-up resistance, C_b [F]: Communication line (SDAr, SCLr) load capacitance, V_b [V]: Communication line voltage

2. f_{MCK}: Serial array unit operation clock frequency

34.5.2 Serial Interface IICA

(T_A = -40 to +105°C, 2.7 V ≤ EV_{DD0} = EV_{DD1} = V_{DD} ≤ 5.5 V, V_{SS} = EV_{SS0} = EV_{SS1} = 0 V)

Parameter	Symbol	Conditions	Normal Mode		Fast Mode		Fast Mode Plus		Unit
			MIN.	MAX.	MIN.	MAX.	MIN.	MAX.	
SCLA0 clock frequency	f_{SCL}	Fast mode plus: 10 MHz ≤ f_{CLK}					0	1000	kHz
		Fast mode: 3.5 MHz ≤ f_{CLK}			0	400			kHz
		Normal mode: 1 MHz ≤ f_{CLK}	0	100					kHz
Setup time of restart condition[Note 1]	$t_{SU:STA}$		4.7		0.6		0.26		μs
Hold time	$t_{HD:STA}$		4.0		0.6		0.26		μs
Hold time when SCLA0 = "L"	t_{LOW}		4.7		1.3		0.5		μs
Hold time when SCLA0 = "H"	t_{HIGH}		4.0		0.6		0.26		μs
Data setup time (reception)	$t_{SU:DAT}$		250		100		50		ns
Data hold time (transmission)[Note 2]	$t_{HD:DAT}$		0	3.45	0	0.9	0		μs
Setup time of stop condition	$t_{SU:STO}$		4.0		0.6		0.26		μs
Bus-free time	t_{BUF}		4.7		1.3		0.5		μs

Notes 1. The first clock pulse is generated after this period when the start/restart condition is detected.

2. The maximum value (MAX.) of $t_{HD:DAT}$ is during normal transfer and a wait state is inserted in the $\overline{ACK}$ (acknowledge) timing.

Remark The maximum value of C_b (communication line capacitance) and the value of R_b (communication line pull-up resistor) at that time in each mode are as follows.

Standard mode: C_b = 400 pF, R_b = 2.7 kΩ

Fast mode: C_b = 320 pF, R_b = 1.1 kΩ

Fast mode plus: C_b = 120 pF, R_b = 1.1 kΩ

IICA serial transfer timing

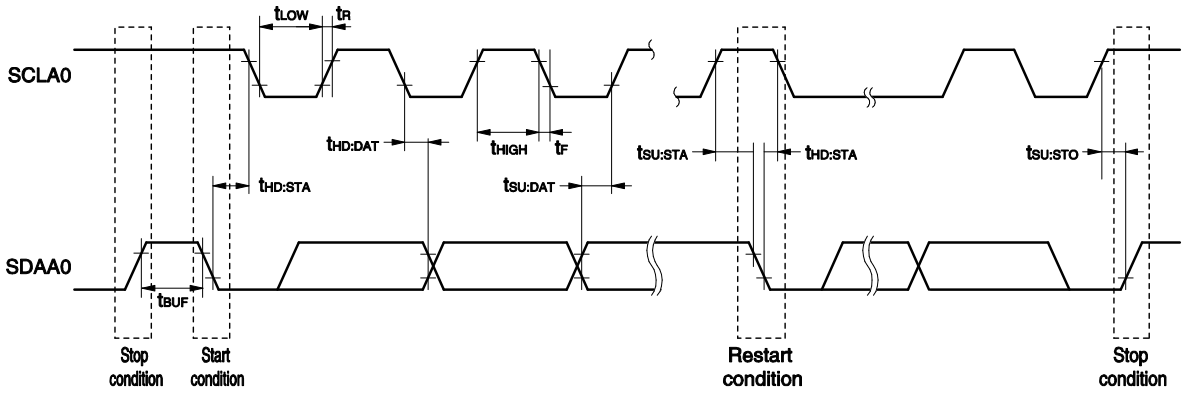

34.5.3 On-chip Debug (UART)

(T_A = -40 to +105°C, 2.7 V ≤ EV_{DD0} = EV_{DD1} = V_{DD} ≤ 5.5 V, V_{SS} = EV_{SS0} = EV_{SS1} = 0 V)

Parameter	Symbol	Conditions	MIN.	TYP.	MAX.	Unit
Transfer rate	-		115.2 k		1 M	bps

34.5.4 LIN/UART Module (RLIN3) UART Mode

(T_A = -40 to +105°C, 2.7 V ≤ EV_{DD0} = EV_{DD1} = V_{DD} ≤ 5.5 V, V_{SS} = EV_{SS0} = EV_{SS1} = 0 V)

Parameter	Symbol	Conditions		MIN.	TYP.	MAX.	Unit
Transfer rate	-	Operation mode, HALT mode	LIN communication clock source (f_{CLK} or f_{MX}): 4 to 32 MHz			5333	kbps
		SNOOZE mode	LIN communication clock source (f_{CLK}): 1 to 32 MHz FRQSEL4 = 0 in the user option byte (000C2H/020C2H)			4.8	
			LIN communication clock source (f_{CLK}): 1 to 32 MHz FRQSEL4 = 1 in the user option byte (000C2H/020C2H)			2.4	

34.6 Analog Characteristics

34.6.1 A/D Converter Characteristics

(1) When AV_{REF} (+) = AV_{REFP}/ANI0 (ADREFP1 = 0, ADREFP0 = 1), AV_{REF} (-) = AV_{REFM}/ANI1 (ADREFM = 1), target ANI pin: ANI2 to ANI23 (power supply: V_{DD})

(T_A = -40 to +105°C, 2.7 V ≤ EV_{DD0} = EV_{DD1} = V_{DD} ≤ 5.5 V, V_{SS} = EV_{SS0} = EV_{SS1} = 0 V, Reference voltage (+) = AV_{REFP}, Reference voltage (-) = AV_{REFM} = 0 V)

Parameter	Symbol	Conditions		MIN.	TYP.	MAX.	Unit
Resolution	RES			8		10	bit
Overall error[Note 1]	AINL	10-bit resolution AV_{REFP} = V_{DD}	4.0 V ≤ V_{DD} ≤ 5.5 V		1.2	±3.0	LSB
			2.7 V ≤ V_{DD} < 4.0 V		1.2	±3.5	LSB
Conversion time	t_{CONV}	10-bit resolution AV_{REFP} = V_{DD}	4.0 V ≤ V_{DD} ≤ 5.5 V	2.125		39	μs
			2.7 V ≤ V_{DD} < 4.0 V	3.1875		39	μs
Zero-scale error[Notes 1, 2]	EZS	10-bit resolution AV_{REFP} = V_{DD}	2.7 V ≤ V_{DD} ≤ 5.5 V			±0.25	%FSR
Full-scale error[Notes 1, 2]	EFS	10-bit resolution AV_{REFP} = V_{DD}	2.7 V ≤ V_{DD} ≤ 5.5 V			±0.25	%FSR
Integral linearity error[Note 1]	ILE	10-bit resolution AV_{REFP} = V_{DD}	2.7 V ≤ V_{DD} ≤ 5.5 V			±2.5	LSB
Differential linearity error[Note 1]	DLE	10-bit resolution AV_{REFP} = V_{DD}	2.7 V ≤ V_{DD} ≤ 5.5 V			±1.5	LSB
Reference voltage (+)	AV_{REFP}			2.7		V_{DD}	V
Analog input voltage	V_{AIN}			0		AV_{REFP}	V
Internal reference voltage (+)	V_{BGR}	2.7 V ≤ V_{DD} ≤ 5.5 V		1.38	1.45	1.5	V

Notes 1. Excludes quantization error (±1/2 LSB).

2. This value is indicated as a ratio (%FSR) to the full-scale value.

(2) When AV_{REF} (+) = AV_{REFP}/ANI0 (ADREFP1 = 0, ADREFP0 = 1), AV_{REF} (-) = AV_{REFM}/ANI1 (ADREFM = 1), target ANI pin: ANI24 to ANI30 (power supply: EV_{DD0})

(T_A = -40 to +105°C, 2.7 V ≤ EV_{DD0} = EV_{DD1} = V_{DD} ≤ 5.5 V, V_{SS} = EV_{SS0} = EV_{SS1} = 0 V, Reference voltage (+) = AV_{REFP}, Reference voltage (-) = AV_{REFM} = 0 V)

Parameter	Symbol	Conditions		MIN.	TYP.	MAX.	Unit
Resolution	RES			8		10	bit
Overall error[Note 1]	AINL	10-bit resolution AV_{REFP} = V_{DD}	4.0 V ≤ V_{DD} ≤ 5.5 V		1.2	±4.5	LSB
			2.7 V ≤ V_{DD} < 4.0 V		1.2	±5.0	LSB
Conversion time	t_{CONV}	10-bit resolution AV_{REFP} = V_{DD}	4.0 V ≤ V_{DD} ≤ 5.5 V	2.125		39	μs
			2.7 V ≤ V_{DD} < 4.0 V	3.1875		39	μs
Zero-scale error[Notes 1, 2]	EZS	10-bit resolution AV_{REFP} = V_{DD}	2.7 V ≤ V_{DD} ≤ 5.5 V			±0.35	%FSR
Full-scale error[Notes 1, 2]	EFS	10-bit resolution AV_{REFP} = V_{DD}	2.7 V ≤ V_{DD} ≤ 5.5 V			±0.35	%FSR
Integral linearity error[Note 1]	ILE	10-bit resolution AV_{REFP} = V_{DD}	2.7 V ≤ V_{DD} ≤ 5.5 V			±3.5	LSB
Differential linearity error[Note 1]	DLE	10-bit resolution AV_{REFP} = V_{DD}	2.7 V ≤ V_{DD} ≤ 5.5 V			±2.0	LSB
Reference voltage (+)	AV_{REFP}			2.7		V_{DD}	V
Analog input voltage	V_{AIN}			0		AV_{REFP} and EV_{DD0}	V
Internal reference voltage (+)	V_{BGR}	2.7 V ≤ V_{DD} ≤ 5.5 V		1.38	1.45	1.5	V

Notes 1. Excludes quantization error (±1/2 LSB).

2. This value is indicated as a ratio (%FSR) to the full-scale value.

(3) When AV_{REF} (+) = V_{DD} (ADREFP1 = 0, ADREFP0 = 0), AV_{REF} (-) = V_{SS} (ADREFM = 0), target ANI pin: ANI0 to ANI23, ANI24 to ANI30

(T_A = -40 to +105°C, 2.7 V ≤ EV_{DD0} = EV_{DD1} = V_{DD} ≤ 5.5 V, V_{SS} = EV_{SS0} = EV_{SS1} = 0 V, Reference voltage (+) = V_{DD}, Reference voltage (-) = V_{SS})

Parameter	Symbol	Conditions		MIN.	TYP.	MAX.	Unit
Resolution	RES			8		10	bit
Overall error[Note 1]	AINL	10-bit resolution ANI0 to ANI23	4.0 V ≤ V_{DD} ≤ 5.5 V		1.2	±5.0	LSB
			2.7 V ≤ V_{DD} < 4.0 V		1.2	±5.5	LSB
		10-bit resolution ANI24 to ANI30	4.0 V ≤ V_{DD} ≤ 5.5 V		1.2	±6.5	LSB
			2.7 V ≤ V_{DD} < 4.0 V		1.2	±7.0	LSB
Conversion time	t_{CONV}	10-bit resolution	4.0 V ≤ V_{DD} ≤ 5.5 V	2.125		39	μs
			2.7 V ≤ V_{DD} < 4.0 V	3.1875		39	μs
Zero-scale error[Notes 1, 2]	EZS	10-bit resolution ANI0 to ANI23	2.7 V ≤ V_{DD} ≤ 5.5 V			±0.50	%FSR
		10-bit resolution ANI24 to ANI30	2.7 V ≤ V_{DD} ≤ 5.5 V			±0.60	%FSR
Full-scale error[Notes 1, 2]	EFS	10-bit resolution ANI0 to ANI23	2.7 V ≤ V_{DD} ≤ 5.5 V			±0.50	%FSR
		10-bit resolution ANI24 to ANI30	2.7 V ≤ V_{DD} ≤ 5.5 V			±0.60	%FSR
Integral linearity error[Note 1]	ILE	10-bit resolution ANI0 to ANI23	2.7 V ≤ V_{DD} ≤ 5.5 V			±3.5	LSB
		10-bit resolution ANI24 to ANI30	2.7 V ≤ V_{DD} ≤ 5.5 V			±4.0	LSB
Differential linearity error[Note 1]	DLE	10-bit resolution	2.7 V ≤ V_{DD} ≤ 5.5 V			±2.0	LSB
Analog input voltage	V_{AIN}	ANI0 to ANI23[Note 3]		0		V_{DD}	V
		ANI24 to ANI30[Note 3]		EV_{SS}		EV_{DD0}	V
Internal reference voltage (+)	V_{BGR}	2.7 V ≤ V_{DD} ≤ 5.5 V		1.38	1.45	1.5	V

Notes 1. Excludes quantization error (±1/2 LSB).

2. This value is indicated as a ratio (%FSR) to the full-scale value.

3. The number of pins depends on the product. For details, refer to **2.1 Pin Function List**.

<R> **(4) When AV_{REF} (+) = internal reference voltage (ADREFP1 = 1, ADREFP0 = 0), AV_{REF} (-) = AV_{REFM}/ANI1 (ADREFM = 1), target ANI pin: ANI0, ANI2 to ANI23, ANI24 to ANI30**

(T_A = -40 to +105°C, 2.7 V ≤ EV_{DD0} = EV_{DD1} = V_{DD} ≤ 5.5 V, V_{SS} = EV_{SS0} = EV_{SS1} = 0 V, Reference voltage (+) = V_{BGR}, Reference voltage (-) = AV_{REFM} = 0 V)

Parameter	Symbol	Conditions		MIN.	TYP.	MAX.	Unit
Resolution	RES				8		bit
Conversion time	t_{CONV}	8-bit resolution	2.7 V ≤ V_{DD} ≤ 5.5 V	17		39	μs
Zero-scale error[Notes 1, 2]	EZS	8-bit resolution	2.7 V ≤ V_{DD} ≤ 5.5 V			±0.60	%FSR
Integral linearity error[Note 1]	ILE	8-bit resolution	2.7 V ≤ V_{DD} ≤ 5.5 V			±2.0	LSB
Differential linearity error[Note 1]	DLE	8-bit resolution	2.7 V ≤ V_{DD} ≤ 5.5 V			±1.0	LSB
Reference voltage (+)	V_{BGR}			1.38	1.45	1.5	V
Analog input voltage	V_{AIN}			0		V_{BGR}	V

Notes 1. Excludes quantization error (±1/2 LSB).

2. This value is indicated as a ratio (%FSR) to the full-scale value.

34.6.2 Temperatures Sensor Characteristics

(T_A = -40 to +105°C, 2.7 V ≤ EV_{DD0} = EV_{DD1} = V_{DD} ≤ 5.5 V, V_{SS} = EV_{SS0} = EV_{SS1} = 0 V)

Parameter	Symbol	Conditions	MIN.	TYP.	MAX.	Unit
Temperature sensor output voltage	V_{TMPS25}	Setting ADS register = 80H, T_A = +25°C		1.1		V
Reference output voltage	V_{CONST}	Setting ADS register = 81H	1.38	1.45	1.5	V
Temperature coefficient	F_{VTMPS}	Temperature sensor that depends on the temperature		-3.3		mV/°C
Operation stabilization wait time	t_{AMP}		5			μs

34.6.3 D/A Converter Characteristics

(T_A = -40 to +105°C, 2.7 V ≤ EV_{DD0} = EV_{DD1} = V_{DD} ≤ 5.5 V, V_{SS} = EV_{SS0} = EV_{SS1} = 0 V)

Parameter	Symbol	Conditions		MIN.	TYP.	MAX.	Unit
Resolution	RES					8	bit
Overall error	AINL	Rload = 4 MΩ	2.7 V ≤ V_{DD} ≤ 5.5 V			±2.5	LSB
		Rload = 8 MΩ	2.7 V ≤ V_{DD} ≤ 5.5 V			±2.5	LSB
Settling time	t_{SET}	Cload = 20 pF	2.7 V ≤ V_{DD} ≤ 5.5 V			3	μs

34.6.4 Comparator Characteristics

(T_A = -40 to +105°C, 2.7 V ≤ EV_{DD0} = EV_{DD1} = V_{DD} ≤ 5.5 V, V_{SS} = EV_{SS0} = EV_{SS1} = 0 V)

Parameter	Symbol	Conditions	MIN.	TYP.	MAX.	Unit
Input offset voltage	V_{IOCMP}			±5	±40	mV
Input voltage range	V_{ICMP}		0		V_{DD}	V
Response time	t_{CR}, t_{CF}	Input amplitude ±100 mV		70	200	ns
Stabilization wait time during input channel switching[Note 1]	t_{WAIT}	Input amplitude ±100 mV	300			ns
Operation stabilization wait time[Note 2]	t_{CMP}	3.3 V ≤ V_{DD} ≤ 5.5 V	1			μs
		2.7 V ≤ V_{DD} < 3.3 V	3			μs

Notes 1. Period of time from when the comparator input channel is switched until the comparator is switched to output

2. Period of time from when the comparator operation is enabled (HCMPON bit in CMPCTL is set to 1) until the comparator satisfies the DC/AC characteristics.

34.6.5 POR Circuit Characteristics

(T_A = -40 to +105°C, V_{SS} = EV_{SS0} = EV_{SS1} = 0 V)

Parameter	Symbol	Conditions	MIN.	TYP.	MAX.	Unit
<R> Detection voltage[Note 1]	V_{POR}	Power supply rise time	1.48	1.56	1.62	V
	V_{PDR}	Power supply fall time	1.47	1.55	1.61	V
<R> Minimum pulse width[Note 2]	T_{PW}		300			μs
Detection delay time	T_{PD}				350	μs

Notes 1. This indicates the POR circuit characteristics, and normal operation is not guaranteed under the condition of less than lower limit operation voltage (2.7 V).

<R> **2.** Minimum time required for a POR reset when VDD exceeds below VPDR.

<R>

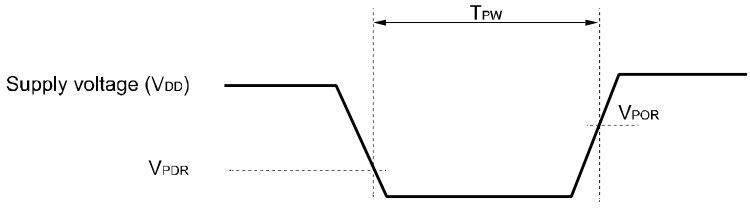

34.6.6 LVD Circuit Characteristics

(1) LVD detection voltage of interrupt mode or reset mode

(T_A = -40 to +105°C, $V_{PDR} \leq EV_{DD0} = EV_{DD1} = V_{DD} \leq 5.5$ V, $V_{SS} = EV_{SS0} = EV_{SS1} = 0$ V)

<R>

Parameter		Symbol	Conditions	MIN.	TYP.	MAX.	Unit
Detection voltage	Supply voltage level	V_{LVD0}	Power supply rise time	4.62	4.74	5.22	V
			Power supply fall time	4.52	4.64	5.11	V
		V_{LVD1}	Power supply rise time	4.50	4.62	5.09	V
			Power supply fall time	4.40	4.52	4.98	V
		V_{LVD2}	Power supply rise time	4.30	4.42	4.87	V
			Power supply fall time	4.21	4.32	4.76	V
		V_{LVD3}	Power supply rise time	3.13	3.22	3.66	V
			Power supply fall time	3.07	3.15	3.47	V
		V_{LVD4}	Power supply rise time	2.95	3.02	3.44	V
			Power supply fall time	2.89	2.96	3.23	V
		V_{LVD5}	Power supply rise time	2.74	2.81	3.22	V
			Power supply fall time	2.68 Note	2.75	3.00	V
Minimum pulse width		t_{LW}		300			μs
Detection delay time		t_{LD}				300	μs

Note The minimum value exceeds below the lower limit operation voltage (2.7 V), however, in reset mode, normal operation (same behavior when V_{DD} = 2.7 V) is possible until a reset is effected at the power supply falling time.

(2) LVD detection voltage of interrupt & reset mode

(T_A = -40 to +105°C, $V_{PDR} \leq EV_{DD0} = EV_{DD1} = V_{DD} \leq 5.5$ V, $V_{SS} = EV_{SS0} = EV_{SS1} = 0$ V)

<R>

Parameter	Symbol	Conditions		MIN.	TYP.	MAX.	Unit
Interrupt and reset mode	V_{LVD5}	VPOC2, VPOC1, VPOC0 = 0, 0, 1 Note 1, falling reset voltage: 2.75 V		2.68 Note 2	2.75	3.00	V
	V_{LVD2}	LVIS1, LVIS0 = 1, 0	Rising release reset voltage	4.30	4.42	4.87	V
			Falling interrupt voltage	4.21	4.32	4.76	V
	V_{LVD5}	VPOC2, VPOC1, VPOC0 = 0, 1, 0 Note 1, falling reset voltage: 2.75 V		2.68 Note 2	2.75	3.00	V
	V_{LVD1}	LVIS1, LVIS0 = 0, 0	Rising release reset voltage	4.50	4.62	5.09	V
			Falling interrupt voltage	4.40	4.52	4.98	V
	V_{LVD5}	VPOC2, VPOC1, VPOC0 = 0, 1, 1 Note 1, falling reset voltage: 2.75 V		2.68 Note 2	2.75	3.00	V
	V_{LVD3}	LVIS1, LVIS0 = 0, 1	Rising release reset voltage	3.13	3.22	3.66	V
			Falling interrupt voltage	3.07	3.15	3.47	V
	V_{LVD0}	LVIS1, LVIS0 = 0, 0	Rising release reset voltage	4.62	4.74	5.22	V
			Falling interrupt voltage	4.52	4.64	5.11	V

Notes 1. These values indicate setting values of option bytes.

2. The minimum value exceeds below the lower limit operation voltage (2.7 V), however, in reset mode, normal operation (same behavior when V_{DD} = 2.7 V) is possible until a reset is effected at the power supply falling time.

34.7 Power Supply Voltage Rising Time

(T_A = -40 to +105°C, V_{SS} = EV_{SS0} = EV_{SS1} = 0 V)

Parameter	Symbol	Conditions	MIN.	TYP.	MAX.	Unit
Maximum power supply voltage rising slope	S_{vrmax}	0 V → V_{DD} (VPOC2 = 0 or 1[Note 2])			50[Note 3]	V/ms
Minimum power supply voltage rising slope [Note 1]	S_{vrmin}	0 V → 2.7 V	6.5			V/ms

Notes 1. The minimum power supply voltage rising slope is applied only under the following condition.
When the voltage detection (LVD) circuit is not used (VPOC2 = 1) and an external reset circuit is not used or when a reset is not effected until V_{DD} = 2.7 V.

2. These values indicate setting values of option bytes.

3. If the power supply drops below V_{PDR} and a POR reset is effected, this specification is also applied when the power supply is recovered without dropping to 0 V.

<R> **34.8 RAM Data Retention Characteristics**

(T_A = -40 to +105°C, V_{SS} = EV_{SS0} = EV_{SS1} = 0 V)

Parameter	Symbol	Conditions	MIN.	TYP.	MAX.	Unit
Data retention supply voltage	V_{DDDR}		1.47[Note]		5.5	V

<R> **Note** This depends on the POR detection voltage. For a falling voltage, data in RAM are retained until the voltage reaches the level that triggers a POR reset but not once it reaches the level at which a POR reset is generated.

<R>

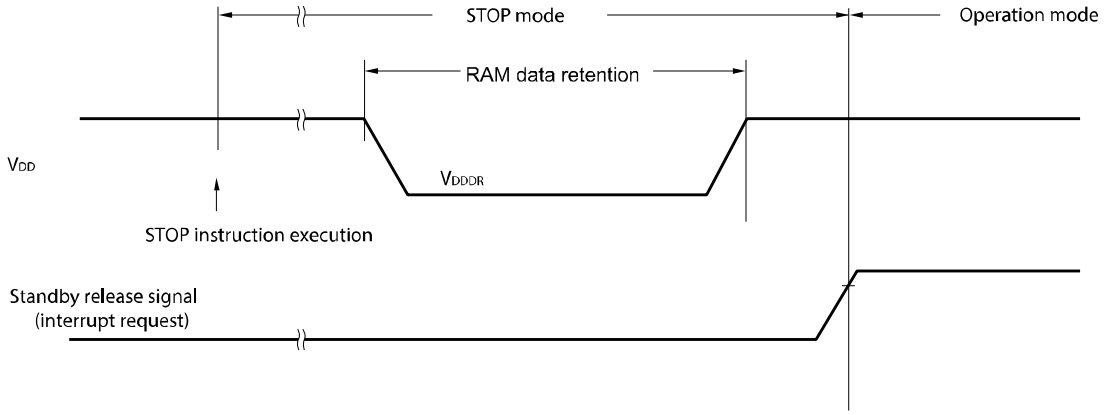

34.9 Flash Memory Programming Characteristics

(T_A = -40 to +105°C, 2.7 V ≤ EV_{DD0} = EV_{DD1} = V_{DD} ≤ 5.5 V, V_{SS} = EV_{SS0} = EV_{SS1} = 0 V)

Parameter	Symbol	Conditions	MIN.	TYP.	MAX.	Unit
System clock frequency	f_{CLK}		1		32	MHz
<R> Number of code flash rewrites Notes 1, 2, 3	C_{erwr}	Retained for 20 years T_A = +85°C Note 4	1,000			Times
<R> Number of data flash rewrites Notes 1, 2, 3		Retained for 20 years T_A = +85°C Note 4	10,000			
<R>		Retained for 5 years T_A = +85°C Note 4	100,000			
Erase time	T_{erasa}	Block erase	5			ms
Write time	T_{wrwa}	1 word write	10			μs

<R> **Notes 1.** 1 erase + 1 write after the erase is regarded as 1 rewrite. The starting point of the retaining years are after the erase.

2. When using flash memory programmer and Renesas Electronics self programming library

3. These are the characteristics of the flash memory and the results obtained from reliability testing by Renesas Electronics Corporation.

4. The specified data retention time is given under the condition that the average temperature (T_A) is 85°C or below.

CHAPTER 35 ELECTRICAL SPECIFICATIONS (GRADE K)

Cautions 1. RL78/F13 and RL78/F14 have an on-chip debug function, which is provided for development and evaluation. Do not use the on-chip debug function in products designated for mass production, because the guaranteed number of rewritable times of the flash memory may be exceeded when this function is used, and product reliability therefore cannot be guaranteed. Renesas Electronics is not liable for problems occurring when the on-chip debug function is used.

2. With products not provided with an EV_{DD0}, EV_{DD1}, EV_{SS0}, or EV_{SS1} pin, replace EV_{DD0} and EV_{DD1} with V_{DD}, or replace EV_{SS0} and EV_{SS1} with V_{SS}.

3. The pins mounted depending on the product. For details, refer to 1.5 Pin Configurations and 2.1 Pin Function List.

4. The products are classified into the following five groups according to the product type, pin count, and code flash memory size. In this chapter, the products are referred to by group names depending on the content. In this case, refer to the following classification.

Group A: RL78/F13 (LIN incorporated) products with 20, 30, 32, 48, or 64 pins and 16 Kbytes to 64 Kbytes of code flash memory

Group B: RL78/F13 (LIN incorporated) products with 48 or 64 pins and 96 Kbytes to 128 Kbytes of code flash memory or with 80 pins and 64 Kbytes to 128 Kbytes of code flash memory

Group C: RL78/F13 (CAN and LIN incorporated) products with 30, 32, 48, 64, or 80 pins and 32 Kbytes to 128 Kbytes of code flash memory

Group D: RL78/F14 products with 30, 32, 48, 64, or 80 pins and 48 Kbytes to 96 Kbytes of code flash memory

Group E: RL78/F14 products with 48, 64, or 80 pins and 128 Kbytes to 256 Kbytes of code flash memory or with 100 pins and 64 Kbytes to 256 Kbytes of code flash memory

35.1 Absolute Maximum Ratings

(1/2)

Parameter	Symbol	Conditions	Ratings	Unit
Supply voltage	V_{DD}		-0.5 to +6.5	V
	EV_{DD0}, EV_{DD1}	$EV_{DD0} = EV_{DD1}$	-0.5 to +6.5	V
	V_{SS}		-0.5 to +0.3	V
	EV_{SS0}, EV_{SS1}	$EV_{SS0} = EV_{SS1}$	-0.5 to +0.3	V
REGC pin input voltage	V_{IREGC}	REGC	-0.3 to +2.8 and -0.3 to V_{DD}+0.3[Note 1]	V
Input voltage	V_{I1}	P00 to P03, P10 to P17, P30 to P32, P40 to P47, P50 to P57, P60 to P67, P70 to P77, P92 to P97[Note 4], P106, P107, P120, P125 to P127, P140, P150 to P157	-0.3 to EV_{DD0}+0.3 and -0.3 to V_{DD}+0.3[Note 2]	V
	V_{I2}	P33, P34, P80 to P87, P90 to P97[Note 4], P100 to P105, P121 to P124, P137, $\overline{RESET}$	-0.3 to V_{DD}+0.3[Note 2]	V
Output voltage	V_{O1}	P00 to P03, P10 to P17, P30 to P32, P40 to P47, P50 to P57, P60 to P67, P70 to P77, P92 to P97[Note 4], P106, P107, P120, P125 to P127, P130, P140, P150 to P157	-0.3 to EV_{DD0}+0.3 and -0.3 to V_{DD}+0.3[Note 2]	V
	V_{O2}	P33, P34, P80 to P87, P90 to P97[Note 4], P100 to P105	-0.3 to V_{DD}+0.3	V
Analog input voltage	V_{AI1}	ANI24 to ANI30	-0.3 to EV_{DD0}+0.3 and -0.3 to $AV_{REF(+)}$+0.3[Notes 2, 3]	V
	V_{AI2}	ANI0 to ANI23	-0.3 to V_{DD}+0.3 and -0.3 to $AV_{REF(+)}$+0.3[Notes 2, 3]	V

Notes 1. Connect the REGC pin to V_{SS} via a capacitor (0.47 to 1 μF). This value regulates the absolute maximum rating of the REGC pin. Do not use this pin with voltage applied to it.

2. Must be 6.5 V or lower.

3. For pins to be used in A/D conversion, the voltage should not exceed the value $AV_{REF(+)}$ + 0.3.

4. For pin I/O buffer power supplies, refer to **Table 4-1 Pin I/O Buffer Power Supplies**.

Caution **Product quality may suffer if the absolute maximum rating is exceeded even momentarily for any parameter. That is, the absolute maximum ratings are rated values at which the product is on the verge of suffering physical damage, and therefore the product must be used under conditions that ensure that the absolute maximum ratings are not exceeded.**

Remark Unless specified otherwise, the characteristics of alternate-function pins are the same as those of the port pins.

(2/2)

Parameter	Symbol	Conditions		Ratings	Unit
Output current, high	I_{OH1}	Per pin	P00 to P03, P10 to P17, P30 to P32, P40 to P47, P50 to P57, P60 to P67, P70 to P77, P92 to P97[Note], P106, P107, P120, P125 to P127, P130, P140, P150 to P157	-40	mA
		Total of all pins -170 mA	P01, P02, P40 to P47, P92 to P97[Note], P120, P125 to P127, P150 to P153	-70	mA
			P00, P03, P10 to P17, P30 to P32, P50 to P57, P60 to P67, P70 to P77, P106, P107, P130, P140, P154 to P157	-100	mA
	I_{OH2}	Per pin	P33, P34, P80 to P87, P90 to P97[Note], P100 to P105	-0.5	mA
		Total of all pins		-2	mA
Output current, low	I_{OL1}	Per pin	P00 to P03, P10 to P17, P30 to P32, P40 to P47, P50 to P57, P60 to P67, P70 to P77, P92 to P97[Note], P106, P107, P120, P125 to P127, P130, P140, P150 to P157	40	mA
		Total of all pins 170 mA	P01, P02, P40 to P47, P92 to P97[Note], P120, P125 to P127, P150 to P153	70	mA
			P00, P03, P10 to P17, P30 to P32, P50 to P57, P60 to P67, P70 to P77, P106, P107, P130, P140, P154 to P157	100	mA
	I_{OL2}	Per pin	P33, P34, P80 to P87, P90 to P97[Note], P100 to P105	1	mA
		Total of all pins		5	mA
Operating ambient temperature	T_A	In normal operation mode		-40 to +125	°C
		In flash memory programming mode			
Storage temperature	T_{stg}			-65 to +150	°C

Note For pin I/O buffer power supplies, refer to **Table 4-1 Pin I/O Buffer Power Supplies**.

Caution **Product quality may suffer if the absolute maximum rating is exceeded even momentarily for any parameter. That is, the absolute maximum ratings are rated values at which the product is on the verge of suffering physical damage, and therefore the product must be used under conditions that ensure that the absolute maximum ratings are not exceeded.**

Remark Unless specified otherwise, the characteristics of alternate-function pins are the same as those of the port pins.

35.2 Oscillator Characteristics

35.2.1 Main System Clock Oscillator Characteristics

(T_A = -40 to +125°C, 2.7 V ≤ EV_{DD0} = EV_{DD1} = V_{DD} ≤ 5.5 V, V_{SS} = EV_{SS0} = EV_{SS1} = 0 V)

Resonator	Recommended Circuit	Parameter	Conditions	MIN.	TYP.	MAX.	Unit
Ceramic resonator/ Crystal resonator	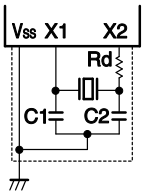	X1 clock oscillation frequency (fx)	2.7 V ≤ V_{DD} ≤ 5.5 V	1.0		20.0	MHz

Cautions 1. When using the X1 oscillator, wire as follows in the area enclosed by the broken lines in the above figures to avoid an adverse effect from wiring capacitance.

- **Keep the wiring length as short as possible.**
- **Do not cross the wiring with the other signal lines.**
- **Do not route the wiring near a signal line through which a high fluctuating current flows.**
- **Always make the ground point of the oscillator capacitor the same potential as V_{SS}.**
- **Do not ground the capacitor to a ground pattern through which a high current flows.**
- **Do not fetch signals from the oscillator.**

2. Customers are requested to consult the resonator manufacturer to select an appropriate resonator and to determine the proper oscillation constant. Customers are also requested to adequately evaluate the oscillation on their system. Determine the X1 clock oscillation stabilization time using the oscillation stabilization time of the oscillation stabilization time counter status register (OSTC) and the oscillation stabilization time select register (OSTS) after sufficiently evaluating the oscillation stabilization time with the resonator to be used.

35.2.2 On-chip Oscillator Characteristics

(T_A = -40 to +125°C, 2.7 V ≤ EV_{DD0} = EV_{DD1} = V_{DD} ≤ 5.5 V, V_{SS} = EV_{SS0} = EV_{SS1} = 0 V)

Oscillators	Symbol	Conditions	MIN.	TYP.	MAX.	Unit
High-speed on-chip oscillator clock frequency[Note]	f_{IH}		1		48	MHz
High-speed on-chip oscillator clock frequency accuracy	-		-3		+3	%
Low-speed on-chip oscillator clock frequency	f_{IL}, f_{WDT}			15		kHz
Low-speed on-chip oscillator clock frequency accuracy	-		-15		+15	%

Note High-speed on-chip oscillator frequency is selected with bits 0 to 4 of the option byte (000C2H/020C2H) and bits 0 to 2 of the HOCODIV register.

35.2.3 Subsystem Clock Oscillator Characteristics

(T_A = -40 to +125°C, 2.7 V ≤ EV_{DD0} = EV_{DD1} = V_{DD} ≤ 5.5 V, V_{SS} = EV_{SS0} = EV_{SS1} = 0 V)

Resonator	Recommended Circuit	Item	Conditions	MIN.	TYP.	MAX.	Unit
Crystal resonator	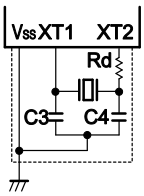	XT1 clock oscillation frequency (f_{XT})	2.7 V ≤ V_{DD} ≤ 5.5 V	29.0	32.768	35.0	kHz

Cautions 1. When using the XT1 oscillator, wire as follows in the area enclosed by the broken lines in the above figures to avoid an adverse effect from wiring capacitance.

- **Keep the wiring length as short as possible.**
- **Do not cross the wiring with the other signal lines.**
- **Do not route the wiring near a signal line through which a high fluctuating current flows.**
- **Always make the ground point of the oscillator capacitor the same potential as V_{SS}.**
- **Do not ground the capacitor to a ground pattern through which a high current flows.**
- **Do not fetch signals from the oscillator.**

2. The XT1 oscillator is designed as a low-amplitude circuit for reducing power consumption and thus required to be adequately evaluated on the system. Customers are requested to consult the resonator manufacturer to select an appropriate resonator and to determine the proper oscillation constant.

35.2.4 PLL Circuit Characteristics

(T_A = -40 to +125°C, 2.7 V ≤ EV_{DD0} = EV_{DD1} = V_{DD} ≤ 5.5 V, V_{SS} = EV_{SS0} = EV_{SS1} = 0 V)

Resonator	Symbol	Conditions		MIN.	TYP.	MAX.	Unit
PLL input enable clock frequency[Note 1]	f_{PLLI}	PLLMUL = 0	PLLDIV0 = 0	3.92	4.0	4.08	MHz
			PLLDIV0 = 1	7.84	8.0	8.16	MHz
		PLLMUL = 1	PLLDIV0 = 0	3.92	4.0	4.08	MHz
			PLLDIV0 = 1	7.84	8.0	8.16	MHz
PLL output frequency (center value)	f_{PLL}	PLLMUL = 0	PLLDIV0 = 0	f_{PLLI} × 12/2			MHz
			PLLDIV0 = 1	f_{PLLI} × 12/4			MHz
		PLLMUL = 1 [Note 4]	PLLDIV0 = 0 [Note 4]	f_{PLLI} × 16/2			MHz
			PLLDIV0 = 1	f_{PLLI} × 16/4			MHz
Long-term jitter[Notes 2, 3]	t_{LJ}	f_{PLL} = 24 MHz (480 counts)		-2		+2	ns
		f_{PLL} = 32 MHz (640 counts)		-2		+2	ns
		f_{PLL} = 48 MHz (960 counts)		-2		+2	ns

Notes 1. If the high-speed on-chip oscillator clock is to be selected as the PLL input clock, the minimum and maximum values will reflect the range of accuracy of the oscillation frequency by the high-speed on-chip oscillator clock.

2. Guaranteed by design, but not tested before shipment.

3. Indicates 20 μs.

4. Setting of PLLMUL = 1 and PLLDIV0 = 0 is prohibited when f_{PLLI} > 6 MHz.

35.3 DC Characteristics

35.3.1 Pin Characteristics

For the relationship between the port pins shown in the following tables and the products, refer to **CHAPTER 4 PORT FUNCTIONS**.

<R> **(T_A = -40 to +125°C, 2.7 V ≤ EV_{DD0} = EV_{DD1} = V_{DD} ≤ 5.5 V, V_{SS} = EV_{SS0} = EV_{SS1} = 0 V) (1/6)**

Items	Symbol	Conditions		MIN.	TYP.	MAX.	Unit
Output current, high[Note 1]	I_{OH1}	Per pin for P00 to P03, P10 to P17, P30 to P32, P40 to P47, P50 to P57, P60 to P67, P70 to P77, P92 to P97[Note 3], P106, P107, P120, P125 to P127, P130, P140, P150 to P157	4.0 V ≤ EV_{DD0} ≤ 5.5 V			-5.0	mA
			2.7 V ≤ EV_{DD0} < 4.0 V			-3.0	mA
		Per pin for P10, P12, P14, P30,P120,P140 (special slew rate)	4.0 V ≤ EV_{DD0} ≤ 5.5 V			-0.6	mA
			2.7 V ≤ EV_{DD0} < 4.0 V			-0.2	mA
		Total of P01, P02, P40 to P47, P92 to P97[Note 3], P120, P125 to P127, P150 to P153 (for duty factors ≤ 70%[Note 2])	4.0 V ≤ EV_{DD0} ≤ 5.5 V			-20.0	mA
			2.7 V ≤ EV_{DD0} < 4.0 V			-10.0	mA
		Total of P00, P03, P10 to P17, P30 to P32, P50 to P57, P60 to P67, P70 to P77, P106, P107, P130, P140, P154 to P157 (for duty factors ≤ 70%[Note 2])	4.0 V ≤ EV_{DD0} ≤ 5.5 V			-30.0	mA
			2.7 V ≤ EV_{DD0} < 4.0 V			-19.0	mA
		Total of all pins (for duty factors ≤ 70%[Note 2])	4.0 V ≤ EV_{DD0} ≤ 5.5 V			-42.0	mA
			2.7 V ≤ EV_{DD0} < 4.0 V			-29.0	mA
	I_{OH2}	Per pin for P33, P34, P80 to P87, P90 to P97[Note 3], P100 to P105	2.7 V ≤ V_{DD} ≤ 5.5 V			-0.1	mA
		Total of all pins (for duty factors ≤ 70%[Note 2])	2.7 V ≤ V_{DD} ≤ 5.5 V			-2.0	mA

Notes 1. Value of current at which the device operation is guaranteed even if the current flows from pins EV_{DD0}, EV_{DD1} and V_{DD} to an output pin.

2. These output current values are obtained under the condition that the duty factor is no greater than 70%. The output current values when the duty factor is changed to a value greater than 70% can be calculated from the following expression (when the duty factor is changed to n%).

- Total output current of pins (I_{OH} × 0.7)/(n × 0.01)

<Example> Where n = 80% and I_{OH} = -10.0 mA

Total output current of pins = (-10.0 × 0.7)/(80 × 0.01) ≈ -8.7 mA

However, the current that is allowed to flow into one pin does not vary depending on the duty factor. A current higher than the absolute maximum rating must not flow into one pin.

3. For pin I/O buffer power supplies, refer to **Table 4-1 Pin I/O Buffer Power Supplies**.

Caution **P10 to P17, P60 to P63, P70 to P72, and P120 do not output high level in N-ch open-drain mode.**

<R> **P10 to P12 and P70 to P72 of the Group A products do not support N-ch open-drain mode.**

Remark Unless specified otherwise, the characteristics of alternate-function pins are the same as those of the port pins.

<R> **(T_A = -40 to +125°C, 2.7 V ≤ EV_{DD0} = EV_{DD1} = V_{DD} ≤ 5.5 V, V_{SS} = EV_{SS0} = EV_{SS1} = 0 V) (2/6)**

<R>

Items	Symbol	Conditions		MIN.	TYP.	MAX.	Unit
Output current, low[Note 1]	I_{OL1}	Per pin for P00 to P03, P10 to P17, P30 to P32, P40 to P47, P50 to P57, P60 to P67, P70 to P77, P92 to P97[Note 3], P106, P107, P120, P125 to P127, P130, P140, P150 to P157	4.0 V ≤ EV_{DD0} ≤ 5.5 V			8.5	mA
			2.7 V ≤ EV_{DD0} < 4.0 V			4.0	mA
		Per pin for P10, P12, P14, P30, P120, P140 (special slew rate)	4.0 V ≤ EV_{DD0} ≤ 5.5 V			0.59	mA
			2.7 V ≤ EV_{DD0} < 4.0 V			0.07	mA
		Total of P01, P02, P40 to P47, P92 to P97[Note 3], P120, P125 to P127, P150 to P153 (for duty factors ≤ 70%[Note 2])	4.0 V ≤ EV_{DD0} ≤ 5.5 V			20.0	mA
			2.7 V ≤ EV_{DD0} < 4.0 V			15.0	mA
		Total of P00, P03, P10 to P17, P30 to P32, P50 to P57, P60 to P67, P70 to P77, P106, P107, P130, P140, P154 to P157 (for duty factors ≤ 70%[Note 2])	4.0 V ≤ EV_{DD0} ≤ 5.5 V			45.0	mA
			2.7 V ≤ EV_{DD0} < 4.0 V			35.0	mA
		Total of all pins (for duty factors ≤ 70%[Note 2])	4.0 V ≤ EV_{DD0} ≤ 5.5 V			65.0	mA
			2.7 V ≤ EV_{DD0} < 4.0 V			50.0	mA
	I_{OL2}	Per pin for P33, P34, P80 to P87, P90 to P97[Note 3], P100 to P105	2.7 V ≤ V_{DD} ≤ 5.5 V			0.4	mA
		Total of all pins (for duty factors ≤ 70%[Note 2])	2.7 V ≤ V_{DD} ≤ 5.5 V			5.0	mA

Notes 1. Value of current at which the device operation is guaranteed even if the current flows to the EV_{SS0}, EV_{SS1} and V_{SS} pins from an output pin.

2. These output current values are obtained under the condition that the duty factor is no greater than 70%. The output current values when the duty factor is changed to a value greater than 70% can be calculated from the following expression (when the duty factor is changed to n%).

- Total output current of pins $(I_{OL} \times 0.7)/(n \times 0.01)$

<Example> Where n = 80% and I_{OL} = 10.0 mA

Total output current of pins = $(10.0 \times 0.7)/(80 \times 0.01) \approx 8.7$ mA

However, the current that is allowed to flow into one pin does not vary depending on the duty factor. A current higher than the absolute maximum rating must not flow into one pin.

3. For pin I/O buffer power supplies, refer to **Table 4-1 Pin I/O Buffer Power Supplies**.

Remark Unless specified otherwise, the characteristics of alternate-function pins are the same as those of the port pins.

<R> **(T_A = -40 to +125°C, 2.7 V ≤ EV_{DD0} = EV_{DD1} = V_{DD} ≤ 5.5 V, V_{SS} = EV_{SS0} = EV_{SS1} = 0 V) (3/6)**

Items	Symbol	Conditions		MIN.	TYP.	MAX.	Unit
Input voltage, high	V_{IH1}	P00 to P03, P10 to P17, P30 to P32, P40 to P47, P50 to P57, P60 to P67, P70 to P77, P106, P107, P120, P125 to P127, P140, P150 to P157 (Schmitt 1 mode)	4.0 V ≤ EV_{DD0} ≤ 5.5 V	0.65 EV_{DD0}		EV_{DD0} Note 1	V
			2.7 V ≤ EV_{DD0} < 4.0 V	0.7 EV_{DD0}		EV_{DD0} Note 1	V
	V_{IH2}	P10, P11, P13, P14, P16, P17, P30, P43, P50, P52 to P54, P60 to P63, P70, P71, P73, P75 to P77, P107, P125, P150, P152, P153 (Schmitt 3 mode)	4.0 V ≤ EV_{DD0} ≤ 5.5 V	0.8 EV_{DD0}		EV_{DD0} Note 1	V
			2.7 V ≤ EV_{DD0} < 4.0 V	0.85 EV_{DD0}		EV_{DD0} Note 1	V
	V_{IH3}	P10, P11, P13, P14, P16, P17, P30, P54, P62, P63, P70, P71, P73, P125 (TTL mode)	4.0 V ≤ EV_{DD0} ≤ 5.5 V	2.2		EV_{DD0} Note 1	V
			2.7 V ≤ EV_{DD0} < 4.0 V	2.0		EV_{DD0} Note 1	V
	V_{IH4} Note 2	P33, P34, P80 to P87, P90 to P97, P100 to P105, P137 (fixed to Schmitt 3 mode)	4.0 V ≤ V_{DD} ≤ 5.5 V	0.8 V_{DD}		V_{DD}	V
			2.7 V ≤ V_{DD} < 4.0 V	0.85 V_{DD}		V_{DD}	V
	V_{IH5}	$\overline{\text{RESET}}$ (fixed to Schmitt 1 mode)	4.0 V ≤ V_{DD} ≤ 5.5 V	0.65 V_{DD}		V_{DD}	V
			2.7 V ≤ V_{DD} < 4.0 V	0.7 V_{DD}		V_{DD}	V
	V_{IH6}	P121 to P124, EXCLK, EXCLKS (fixed to Schmitt 2 mode)	4.0 V ≤ V_{DD} ≤ 5.5 V	0.8 V_{DD}		V_{DD}	V
			2.7 V ≤ V_{DD} < 4.0 V	0.8 V_{DD}		V_{DD}	V

Notes 1. The maximum value of V_{IH} of the pins P10 to P17, P60 to P63, P70 to P72, and P120 is EV_{DD0}, even in N-ch open-drain mode.

2. P92 to P96 of the Group A products are fixed to Schmitt 1 mode.
P96 and P97 of the Group B, C, and D products are fixed to Schmitt 1 mode.

Remark Unless specified otherwise, the characteristics of alternate-function pins are the same as those of the port pins.

<R> **(T_A = -40 to +125°C, 2.7 V ≤ EV_{DD0} = EV_{DD1} = V_{DD} ≤ 5.5 V, V_{SS} = EV_{SS0} = EV_{SS1} = 0 V) (4/6)**

Items	Symbol	Conditions		MIN.	TYP.	MAX.	Unit
Input voltage, low	V_{IL1}	P00 to P03, P10 to P17, P30 to P32, P40 to P47, P50 to P57, P60 to P67, P70 to P77, P106, P107, P120, P125 to P127, P140, P150 to P157 (Schmitt 1 mode)	4.0 V ≤ EV_{DD0} ≤ 5.5 V	0		0.35 EV_{DD0}	V
			2.7 V ≤ EV_{DD0} < 4.0 V	0		0.3 EV_{DD0}	V
	V_{IL2}	P10, P11, P13, P14, P16, P17, P30, P43, P50, P52 to P54, P60 to P63, P70, P71, P73, P75 to P77, P107, P125, P150, P152, P153 (Schmitt 3 mode)	4.0 V ≤ EV_{DD0} ≤ 5.5 V	0		0.5 EV_{DD0}	V
			2.7 V ≤ EV_{DD0} < 4.0 V	0		0.4 EV_{DD0}	V
	V_{IL3}	P10, P11, P13, P14, P16, P17, P30, P54, P62, P63, P70, P71, P73, P125 (TTL mode)	4.0 V ≤ EV_{DD0} ≤ 5.5 V	0		0.8	V
			2.7 V ≤ EV_{DD0} < 4.0 V	0		0.5	V
	V_{IL4} Note	P33, P34, P80 to P87, P90 to P97, P100 to P105, P137 (fixed to Schmitt 3 mode)	4.0 V ≤ V_{DD} ≤ 5.5 V	0		0.5 V_{DD}	V
			2.7 V ≤ V_{DD} < 4.0 V	0		0.4 V_{DD}	V
	V_{IL5}	$\overline{\text{RESET}}$ (fixed to Schmitt 1 mode)	4.0 V ≤ V_{DD} ≤ 5.5 V	0		0.35 V_{DD}	V
			2.7 V ≤ V_{DD} < 4.0 V	0		0.3 V_{DD}	V
	V_{IL6}	P121 to P124, EXCLK, EXCLKS (fixed to Schmitt 2 mode)	4.0 V ≤ V_{DD} ≤ 5.5 V	0		0.2 V_{DD}	V
			2.7 V ≤ V_{DD} < 4.0 V	0		0.2 V_{DD}	V

Note P92 to P96 of the Group A products are fixed to Schmitt 1 mode.
P96 and P97 of the Group B, C, and D products are fixed to Schmitt 1 mode.

Remark Unless specified otherwise, the characteristics of alternate-function pins are the same as those of the port pins.

<R> **(T_A = -40 to +125°C, 2.7 V ≤ EV_{DD0} = EV_{DD1} = V_{DD} ≤ 5.5 V, V_{SS} = EV_{SS0} = EV_{SS1} = 0 V) (5/6)**

Items	Symbol	Conditions		MIN.	TYP.	MAX.	Unit
Output voltage, high	V_{OH1}	P00 to P03, P10 to P17, P30 to P32, P40 to P47, P50 to P57, P60 to P67, P70 to P77, P92 to P97[Note], P106, P107, P120, P125 to P127, P130, P140, P150 to P157 (normal slew rate)	4.0 V ≤ EV_{DD0} ≤ 5.5 V, I_{OH1} = -5.0 mA	EV_{DD0}-0.9			V
			2.7 V ≤ EV_{DD0} ≤ 5.5 V, I_{OH1} = -3.0 mA	EV_{DD0}-0.7			V
			2.7 V ≤ EV_{DD0} ≤ 5.5 V, I_{OH1} = -1.0 mA	EV_{DD0}-0.5			V
	V_{OH2}	P33, P34, P80 to P87, P90 to P97[Note], P100 to P105	2.7 V ≤ V_{DD} ≤ 5.5 V I_{OH2} = -100 μA	V_{DD}-0.5			V
	V_{OH3}	P10, P12, P14, P30, P120, P140 (special slew rate)	4.0 V ≤ EV_{DD0} ≤ 5.5 V, I_{OH3} = -0.6 mA	EV_{DD0}-0.8			V
			2.7 V ≤ EV_{DD0} ≤ 5.5 V, I_{OH3} = -0.2 mA	EV_{DD0}-0.5			V
Output voltage, low	V_{OL1}	P00 to P03, P10 to P17, P30 to P32, P40 to P47, P50 to P57, P60 to P67, P70 to P77, P92 to P97[Note], P106, P107, P120, P125 to P127, P130, P140, P150 to P157 (normal slew rate)	4.0 V ≤ EV_{DD0} ≤ 5.5 V, I_{OL1} = 8.5 mA			0.7	V
			4.0 V ≤ EV_{DD0} ≤ 5.5 V, I_{OL1} = 4.0 mA			0.4	V
			2.7 V ≤ EV_{DD0} ≤ 5.5 V, I_{OL1} = 4.0 mA			0.7	V
			2.7 V ≤ EV_{DD0} ≤ 5.5 V, I_{OL1} = 1.5 mA			0.4	V
	V_{OL2}	P33, P34, P80 to P87, P90 to P97[Note], P100 to P105	2.7 V ≤ V_{DD} ≤ 5.5 V I_{OL2} = 400 μA			0.4	V
	V_{OL3}	P10, P12, P14, P30, P120, P140 (special slew rate)	4.0 V ≤ EV_{DD0} ≤ 5.5 V, I_{OL3} = 0.6 mA			0.8	V
			2.7 V ≤ EV_{DD0} ≤ 5.5 V, I_{OL3} = 0.07 mA			0.5	V

Note For pin I/O buffer power supplies, refer to **Table 4-1 Pin I/O Buffer Power Supplies**.

Caution P10 to P17, P60 to P63, P70 to P72, and P120 do not output high level in N-ch open-drain mode.

Remark Unless specified otherwise, the characteristics of alternate-function pins are the same as those of the port pins.

<R> **(T_A = -40 to +125°C, 2.7 V ≤ EV_{DD0} = EV_{DD1} = V_{DD} ≤ 5.5 V, V_{SS} = EV_{SS0} = EV_{SS1} = 0 V) (6/6)**

Items	Symbol	Conditions			MIN.	TYP.	MAX.	Unit
Input leakage current, high	I_{LIH1}	P00 to P03, P10 to P17, P30 to P32, P40 to P47, P50 to P57, P60 to P67, P70 to P77, P92 to P97[Note], P106, P107, P120, P125 to P127, P140, P150 to P157	V_I = EV_{DD0}				1	μA
	I_{LIH2}	P33, P34, P80 to P87, P90 to P97[Note], P100 to P105, P137, $\overline{RESET}$	V_I = V_{DD}				1	μA
	I_{LIH3}	P121 to P124 (X1, X2, XT1, XT2, EXCLK, EXCLKS)	V_I = V_{DD}	In input port or external clock input			1	μA
				In resonator connection			10	μA
Input leakage current, low	I_{LIL1}	P00 to P03, P10 to P17, P30 to P32, P40 to P47, P50 to P57, P60 to P67, P70 to P77, P92 to P97[Note], P106, P107, P120, P125 to P127, P140, P150 to P157	V_I = EV_{SS0}				-1	μA
	I_{LIL2}	P33, P34, P80 to P87, P90 to P97[Note], P100 to P105, P137, $\overline{RESET}$	V_I = V_{SS}				-1	μA
	I_{LIL3}	P121 to P124 (X1, X2, XT1, XT2, EXCLK, EXCLKS)	V_I = V_{SS}	In input port or external clock input			-1	μA
				In resonator connection			-10	μA
On-chip pull-up resistance	R_U	P00 to P03, P10 to P17, P30 to P32, P40 to P47, P50 to P57, P60 to P67, P70 to P77, P92 to P97, P100 to P107, P120, P125 to P127, P140, P150 to P157	V_I = EV_{SS0}, in input port		10	20	100	kΩ

Note For pin I/O buffer power supplies, refer to **Table 4-1 Pin I/O Buffer Power Supplies**.

Caution P10 to P17, P60 to P63, P70 to P72, and P120 do not output high level in N-ch open-drain mode.

Remark Unless specified otherwise, the characteristics of alternate-function pins are the same as those of the port pins.

35.3.2 Supply Current Characteristics

(T_A = -40 to +125°C, 2.7 V ≤ EV_{DD0} = EV_{DD1} = V_{DD} ≤ 5.5 V, V_{SS} = EV_{SS0} = EV_{SS1} = 0 V) (1/3)

Items	Symbol	Conditions						MIN.	TYP.	MAX.	Unit
Supply current[Note 1]	I_{DD1}	Operating mode	Normal operation [Note 2]	High-speed on-chip oscillator clock operation	f_{IH} = 48 MHz		f_{CLK} = 24 MHz [Notes 3, 4]		5.1	12.0	mA
					f_{IH} = 24 MHz		f_{CLK} = f_{IH} [Notes 3, 4]		4.8	11.0	mA
					f_{IH} = 1 MHz		f_{CLK} = f_{IH} [Notes 3, 4]		1.0	2.5	mA
				Resonator operation	f_{MX} = 20 MHz		f_{CLK} = f_{MX} [Notes 3, 5]		4.2	9.0	mA
					f_{MX} = 1 MHz		f_{CLK} = f_{MX} [Notes 3, 5]		0.9	2.5	mA
				Resonator operation (PLL operation) (PLL input clock = f_{MX})	f_{PLL} = 48 MHz, f_{MX} = 8 MHz		f_{CLK} = 24 MHz [Notes 3, 6]		5.0	12.0	mA
					f_{PLL} = 24 MHz, f_{MX} = 8 MHz		f_{CLK} = 24 MHz [Notes 3, 6]		4.9	11.0	mA
					f_{PLL} = 24 MHz, f_{MX} = 4 MHz		f_{CLK} = 24 MHz [Notes 3, 6]		4.7	11.0	mA
				Subsystem clock operation	f_{SUB} = 32.768 kHz		f_{CLK} = f_{SUB} [Note 7]				
						Groups A to D			6.0	80.0	μA
						Group E			6.0	120.0	μA
				Low-speed on-chip oscillator clock operation	f_{IL} = 15 kHz		f_{CLK} = f_{IL} [Note 8]				
						Groups A to D			3.0	70.0	μA
						Group E			3.0	110.0	μA

Notes 1. Total current flowing into V_{DD} and EV_{DD0}, including the input leakage current flowing when the level of the input pin is fixed to V_{DD}, EV_{DD0}, V_{SS}, or EV_{SS0}. However, not including the current flowing into the I/O buffer and on-chip pull-up/pull-down resistors.

2. Current drawn when all the CPU instructions are executed.

3. The values below the MAX. column include the peripheral operation current (except for background operation (BGO)). However, the LVD circuit, A/D converter, D/A converter, and comparator are stopped.

4. When high-speed system clock, subsystem clock, PLL clock, and low-speed on-chip oscillator clock are stopped.

5. When subsystem clock, PLL clock, high-speed on-chip oscillator clock, and low-speed on-chip oscillator clock are stopped.

6. When subsystem clock, high-speed on-chip oscillator clock, and low-speed on-chip oscillator clock are stopped.

7. When high-speed system clock, PLL clock, high-speed on-chip oscillator clock, and low-speed on-chip oscillator are stopped.

8. When high-speed system clock, subsystem clock, PLL clock, and high-speed on-chip oscillator clock are stopped.

Remarks 1. f_{MX}: High-speed system clock frequency

2. f_{SUB}: Subsystem clock frequency

3. f_{PLL}: PLL clock frequency

4. f_{IH}: High-speed on-chip oscillator clock frequency

5. f_{IL}: Low-speed on-chip oscillator clock frequency

6. f_{CLK}: CPU/peripheral hardware clock frequency

<R> **(T_A = -40 to +125°C, 2.7 V ≤ EV_{DD0} = EV_{DD1} = V_{DD} ≤ 5.5 V, V_{SS} = EV_{SS0} = EV_{SS1} = 0 V) (2/3)**

Items	Symbol	Conditions					MIN.	TYP.	MAX.	Unit
Supply current[Notes 1, 3]	I_{DD2}	HALT mode [Note 2]		High-speed on-chip oscillator clock operation	f_{IH} = 48 MHz	f_{CLK} = 24 MHz [Note 5]		0.9	8.0	mA
					f_{IH} = 24 MHz	f_{CLK} = f_{IH} [Note 5]		0.7	7.0	mA
					f_{IH} = 1 MHz	f_{CLK} = f_{IH} [Note 5]		0.3	1.5	mA
				Resonator operation	f_{MX} = 20 MHz	f_{CLK} = f_{MX} [Note 6]		0.6	6.0	mA
					f_{MX} = 1 MHz	f_{CLK} = f_{MX} [Note 6]		0.2	1.5	mA
				Resonator operation (PLL operation) (PLL input clock = f_{MX})	f_{PLL} = 48 MHz, f_{MX} = 8 MHz	f_{CLK} = 24 MHz [Note 7]		0.9	8.0	mA
					f_{PLL} = 24 MHz, f_{MX} = 8 MHz	f_{CLK} = 24 MHz [Note 7]		0.8	7.0	mA
					f_{PLL} = 24 MHz, f_{MX} = 4 MHz	f_{CLK} = 24 MHz [Note 7]		0.6	7.0	mA
				Subsystem clock operation	f_{SUB} = 32.768 kHz	f_{CLK} = f_{SUB} [Note 8]				
					Groups A to D			0.7	75.0	μA
					Group E			0.7	115.0	
				Low-speed on-chip oscillator clock operation	f_{IL} = 15 kHz	f_{CLK} = f_{IL} [Note 9]				
					Groups A to D			0.7	65.0	μA
					Group E			0.7	105.0	
	I_{DD3}	STOP mode [Note 4]		T_A = +25°C	Groups A to D			0.5		μA
					Group E			0.5		
				T_A = +50°C	Groups A to D				2.5	
					Group E				4.5	
				T_A = +70°C	Groups A to D				4.5	
					Group E				8.0	
				T_A = +105°C	Groups A to D				30.0	
					Group E				50.0	
				T_A = +125°C	Groups A to D				60.0	
					Group E				100.0	

Notes 1. Total current flowing into V_{DD} and EV_{DD0}, including the input leakage current flowing when the level of the input pin is fixed to V_{DD}, EV_{DD0}, V_{SS}, or EV_{SS0}. However, not including the current flowing into the I/O buffer and on-chip pull-up/pull-down resistors.

2. When HALT mode is entered during fetch from the flash memory.

3. The values below the MAX. column include the peripheral operation current and STOP leakage current. However, the watchdog timer, LVD circuit, A/D converter, D/A converter, and comparator are stopped

<R> **4.** When high-speed system clock, subsystem clock, PLL clock, high-speed on-chip oscillator clock, and low-speed on-chip oscillator clock are stopped.

5. When high-speed system clock, subsystem clock, PLL clock, and low-speed on-chip oscillator clock are stopped.

6. When subsystem clock, PLL clock, high-speed on-chip oscillator clock, and low-speed on-chip oscillator clock are stopped.

7. When subsystem clock, high-speed on-chip oscillator clock, and low-speed on-chip oscillator clock are stopped.
8. When high-speed system clock, PLL clock, high-speed on-chip oscillator clock, and low-speed on-chip oscillator clock are stopped.
9. When high-speed system clock, subsystem clock, PLL clock, and high-speed on-chip oscillator clock are stopped.

Remarks
1. f_{MX}: High-speed system clock frequency
2. f_{SUB}: Subsystem clock frequency
3. f_{PLL}: PLL clock frequency
4. f_{IH}: High-speed on-chip oscillator clock frequency
5. f_{IL}: Low-speed on-chip oscillator clock frequency
6. f_{CLK}: CPU/peripheral hardware clock frequency

(T_A = -40 to +125°C, 2.7 V ≤ EV_{DD0} = EV_{DD1} = V_{DD} ≤ 5.5 V, V_{SS} = EV_{SS0} = EV_{SS1} = 0 V) (3/3)

Items	Symbol	Conditions				MIN.	TYP.	MAX.	Unit
Supply current[Notes 1, 2]	I_{SNOZ}	SNOOZE mode	A/D converter operation	During mode transition			1.0	1.2	mA
				During conversion	Low-voltage mode AV_{REFP} = V_{DD} = 5.0 V		2.1	2.5	mA
			DTC operation				4.5		mA

Notes 1. Total current flowing into V_{DD} and EV_{DD0}, including the input leakage current flowing when the level of the input pin is fixed to V_{DD}, EV_{DD0}, V_{SS}, or EV_{SS0}. However, not including the current flowing into the I/O buffer and on-chip pull-up/pull-down resistors.

2. The values below the MAX. column include the STOP leakage current.

(T_A = -40 to +125°C, 2.7 V ≤ EV_{DD0} = EV_{DD1} = V_{DD} ≤ 5.5 V, V_{SS} = EV_{SS0} = EV_{SS1} = 0 V)

Parameter	Symbol	Conditions		MIN.	TYP.	MAX.	Unit
Window watchdog timer operating current	I_{WDT} Notes 1, 2	f_{IL} = 15 kHz			0.22		μA
A/D converter operating current	I_{ADC} Note 3	When conversion at maximum speed	Normal mode, AV_{REFP} = V_{DD} = 5.0 V		1.3	1.7	mA
		When internal reference voltage is selected Note 5			75.0		μA
LVD operating current	I_{LVD} Note 4				0.08		μA
Temperature sensor operating current	I_{TMPS}				75.0		μA
D/A converter operating current	I_{DAC}	Per channel			0.8	1.5	mA
Comparator operating current	I_{CMP}				50.0		μA
BGO operating current	I_{BGO} Note 6				2.50	12.20	mA

Notes 1. When the high-speed on-chip oscillator clock and high-speed system clock are stopped.

<R> **2.** Current flowing only to the watchdog timer (including the operation current of the 15 kHz on-chip oscillator). The current value is the sum of I_{DD1}, I_{DD2}, or I_{DD3} and I_{WDT} when the watchdog timer operates in STOP mode.

3. Current flowing only to the A/D converter. The current value is the sum of I_{DD1} or I_{DD2} and I_{ADC} when the A/D converter operates in operation mode or HALT mode.

4. Current flowing only to the LVD circuit. The current value is the sum of I_{DD1}, I_{DD2}, or I_{DD3} and I_{LVD} when the LVD circuit operates in operation mode, HALT mode, or STOP mode.

5. Operating current that increases when the internal reference voltage is selected. This current flows even when conversion is stopped.

6. Current increased by the BGO operation. The current value is the sum of I_{DD1} or I_{DD2} and I_{BGO} when the BGO operates in operation mode or HALT mode.

35.4 AC Characteristics

35.4.1 Basic Operation

(T_A = -40 to +125°C, 2.7 V ≤ EV_{DD0} = EV_{DD1} = V_{DD} ≤ 5.5 V, V_{SS} = EV_{SS0} = EV_{SS1} = 0 V) (1/2)

Parameter	Symbol	Conditions		MIN.	TYP.	MAX.	Unit
Instruction cycle (minimum instruction execution time)	T_{CY}	High-speed on-chip oscillator clock operation		0.04166		1	μs
		High-speed system clock operation		0.05		1	μs
		PLL clock operation		0.04166		1	μs
		Subsystem clock operation		28.5	30.5	34.5	μs
		Low-speed on-chip oscillator clock operation			66.6		μs
		In self programming mode		0.04166		1	μs
CPU/peripheral hardware clock frequency	f_{CLK}			0.04166		66.6	μs
External system clock frequency	f_{EX}			1.0		20.0	MHz
	f_{EXS}			29		35	kHz
External system clock input high-level width, low-level width	t_{EXH}, t_{EXL}			24			ns
	t_{EXHS}, t_{EXLS}			13.7			μs
TI00 to TI07, TI10 to TI17 input high-level width, low-level width	t_{TIH}, t_{TIL}			$1/f_{MCK}+10$			ns
TO00 to TO07, TO10 to TO17 output frequency	f_{TO}	All TO pins, Normal slew rate, C = 30 pF	4.0 V ≤ EV_{DD0} ≤ 5.5 V			12	MHz
			2.7 V ≤ EV_{DD0} < 4.0 V			6	MHz
		TO01, TO06, TO07, TO11, TO13 only, Special slew rate, C = 30 pF				2	MHz
PCLBUZ0 output frequency	f_{PCL}	Normal slew rate C = 30 pF	4.0 V ≤ EV_{DD0} ≤ 5.5 V			12	MHz
			2.7 V ≤ EV_{DD0} < 4.0 V			6	MHz
		Special slew rate C = 30 pF				2	MHz
Timer RJ input cycle	t_C	TRJIO0		100			ns
Timer RJ input high-level width, low-level width	t_{WH}, t_{WL}	TRJIO0		40			ns
Interrupt input high-level width, low-level width	t_{INTH}, t_{INTL}	INTP0 to INTP13 Note		1			μs
KR0 to KR7 key interrupt input low-level width	t_{KR}			250			ns
$\overline{\text{RESET}}$ low-level width	t_{RSL}			10			μs

<R>

Note Pins $\overline{\text{RESET}}$, INTP0 to INTP3, INTP12, and INTP13 have noise filters for transient levels lasting less than 100 ns.

Caution Excluding the error in oscillation frequency accuracy.

Remark f_{MCK}: Timer array unit operation clock frequency

(T_A = -40 to +125°C, 2.7 V ≤ EV_{DD0} = EV_{DD1} = V_{DD} ≤ 5.5 V, V_{SS} = EV_{SS0} = EV_{SS1} = 0 V) (2/2)

Parameter	Symbol	Conditions		MIN.	TYP.	MAX.	Unit
Port output rise time, port output fall time	t_{RO}, t_{FO}	P00 to P03, P10 to P17, P30 to P32, P40 to P47, P50 to P57, P60 to P67, P70 to P77, P96, P97, P106, P107, P120, P125 to P127, P130, P140, P150 to P157 (normal slew rate) C = 30 pF	4.0 V ≤ EV_{DD0} ≤ 5.5 V			25	ns
			2.7 V ≤ EV_{DD0} < 4.0 V			55	ns
		P10, P12, P14, P30, P120, P140 (special slew rate) C = 30 pF	4.0 V ≤ EV_{DD0} ≤ 5.5 V		25 Note	60	ns
			2.7 V ≤ EV_{DD0} < 4.0 V			100	ns

<R>

Note T_A = +25°C, EV_{DD0} = 5.0 V

Caution Excluding the error in oscillation frequency accuracy.

Remark f_{MCK}: Timer array unit operation clock frequency

AC Timing Test Points

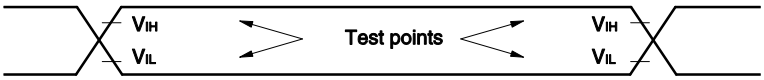

External System Clock Timing

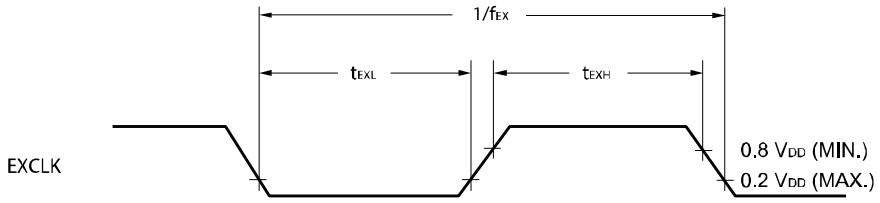

<R>

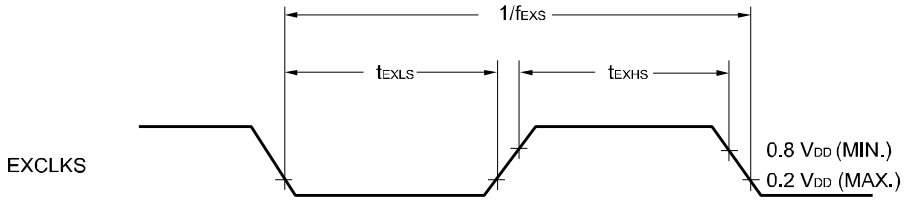

TI/TO Timing

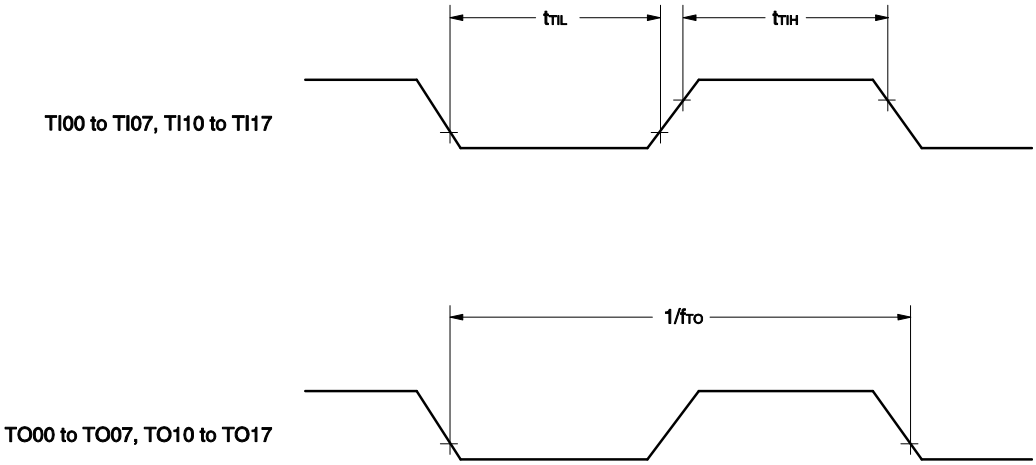

Interrupt Request Input Timing

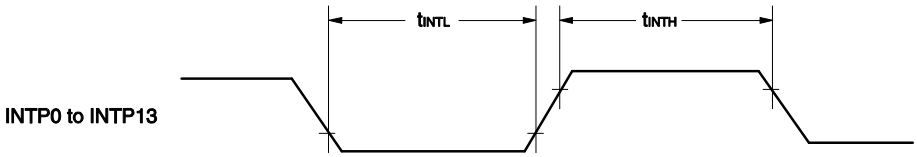

Key Interrupt Input Timing

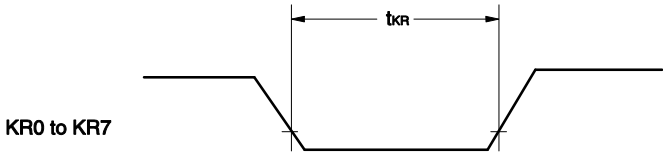

$\overline{\text{RESET}}$ Input Timing

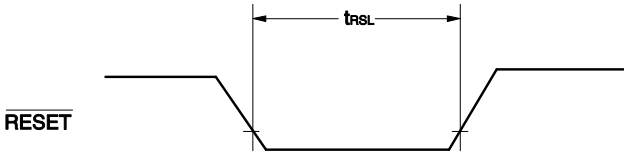

Output Rising and Falling Timing

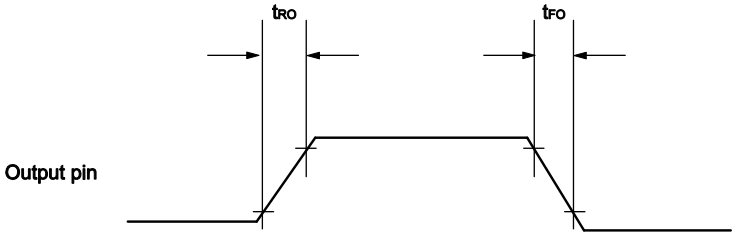

35.5 Peripheral Functions Characteristics

35.5.1 Serial Array Unit

(1) During communication at same potential (UART mode) (dedicated baud rate generator output)

(T_A = -40 to +125°C, 2.7 V ≤ EV_{DD0} = EV_{DD1} = V_{DD} ≤ 5.5 V, V_{SS} = EV_{SS0} = EV_{SS1} = 0 V)

Parameter	Symbol	Conditions		MIN.	TYP.	MAX.	Unit
Transfer rate	-					f_{MCK}/6	bps
		f_{CLK} = 24 MHz, f_{MCK} = f_{CLK}	Normal slew rate			4	Mbps
			Special slew rate			2	Mbps

UART mode connection diagram (during communication at same potential)

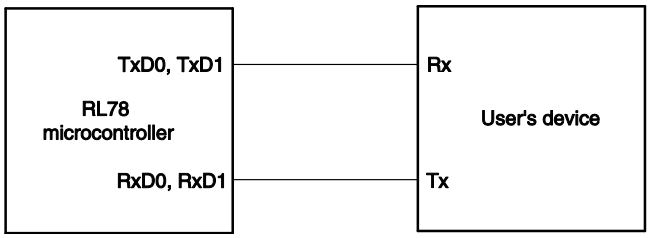

UART mode bit width (during communication at same potential) (reference)

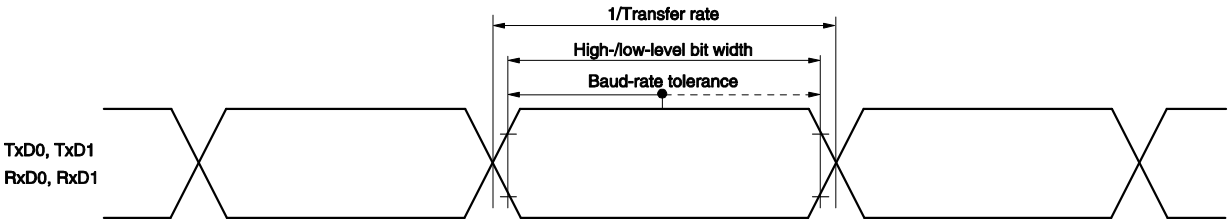

Caution Select the normal input buffer for the RxD0 pin and RxD1 pin and normal output mode for the TxD0 pin and TxD1 pin.

Remark f_{MCK}: Serial array unit operation clock frequency

(2) During communication at same potential (CSI mode) (master mode, $\overline{SCKp}$ … internal clock output, normal slew rate)

(T_A = -40 to +125°C, 2.7 V ≤ EV_{DD0} = EV_{DD1} = V_{DD} ≤ 5.5 V, V_{SS} = EV_{SS0} = EV_{SS1} = 0 V)

Parameter	Symbol	Conditions	MIN.	TYP.	MAX.	Unit
$\overline{SCKp}$ cycle time	t_{KCY1}		166.6 Note 5			ns
$\overline{SCKp}$ high-level width, low-level width	t_{KH1}, t_{KL1}	4.0 V ≤ EV_{DD0} ≤ 5.5 V	t_{KCY1}/2 – 12			ns
		2.7 V ≤ EV_{DD0} < 4.0 V	t_{KCY1}/2 – 18			ns
SIp setup time (to $\overline{SCKp}$↑) Note 1	t_{SIK1}	4.0 V ≤ EV_{DD0} ≤ 5.5 V	55			ns
		2.7 V ≤ EV_{DD0} < 4.0 V	66			ns
SIp hold time (from $\overline{SCKp}$↑) Note 2	t_{KSI1}		30			ns
Delay time from $\overline{SCKp}$↓ to SOp output Note 3	t_{KSO1}	C = 30 pF Note 4			40	ns

Notes 1. When DAPmn = 0 and CKPmn = 0, or DAPmn = 1 and CKPmn = 1. The SIp setup time becomes "to $\overline{SCKp}$↓" when DAPmn = 0 and CKPmn = 1 or DAPmn = 1 and CKPmn = 0.

2. When DAPmn = 0 and CKPmn = 0 or DAPmn = 1 and CKPmn = 1. The SIp hold time becomes "from $\overline{SCKp}$↓" when DAPmn = 0 and CKPmn = 1 or DAPmn = 1 and CKPmn = 0.

3. When DAPmn = 0 and CKPmn = 0, or DAPmn = 1 and CKPmn = 1. The delay time to SOp output becomes "from $\overline{SCKp}$↑" when DAPmn = 0 and CKPmn = 1, or DAPmn = 1 and CKPmn = 0.

4. C is the load capacitance of the $\overline{SCKp}$ and SOp output lines.

5. t_{KCY1} ≥ 4/f_{CLK} must also be satisfied.

Caution Select the normal input buffer for the SIp pin and normal output mode for the SOp pin and $\overline{SCKp}$ pin.

Remark p: CSIp (p = 00, 01, 10, 11), m: Unit m (m = 0, 1), n: Channel n (n = 0, 1)

(3) During communication at same potential (CSI mode) (master mode, $\overline{\text{SCKp}}$ … internal clock output, special slew rate)

(T_A = -40 to +125°C, 4.0 V ≤ EV_{DD0} = EV_{DD1} = V_{DD} ≤ 5.5 V, V_{SS} = EV_{SS0} = EV_{SS1} = 0 V)

Parameter	Symbol	Conditions	MIN.	TYP.	MAX.	Unit
$\overline{\text{SCKp}}$ cycle time	t_{KCY1}		500 Note 5			ns
$\overline{\text{SCKp}}$ high-level width, low-level width	t_{KH1}, t_{KL1}		t_{KCY1}/2 – 60			ns
SIp setup time (to $\overline{\text{SCKp}}$↑) Note 1	t_{SIK1}		120			ns
SIp hold time (from $\overline{\text{SCKp}}$↑) Note 2	t_{KSI1}		80			ns
Delay time from $\overline{\text{SCKp}}$↓ to SOp output Note 3	t_{KSO1}	C = 30 pF Note 4			90	ns

Notes 1. When DAPmn = 0 and CKPmn = 0, or DAPmn = 1 and CKPmn = 1. The SIp setup time becomes "to $\overline{\text{SCKp}}$↓" when DAPmn = 0 and CKPmn = 1 or DAPmn = 1 and CKPmn = 0.

2. When DAPmn = 0 and CKPmn = 0 or DAPmn = 1 and CKPmn = 1. The SIp hold time becomes "from $\overline{\text{SCKp}}$↑" when DAPmn = 0 and CKPmn = 1 or DAPmn = 1 and CKPmn = 0.

3. When DAPmn = 0 and CKPmn = 0, or DAPmn = 1 and CKPmn = 1. The delay time to SOp output becomes "from $\overline{\text{SCKp}}$↑" when DAPmn = 0 and CKPmn = 1, or DAPmn = 1 and CKPmn = 0.

4. C is the load capacitance of the $\overline{\text{SCKp}}$ and SOp output lines.

5. t_{KCY1} ≥ 4/f_{CLK} must also be satisfied.

Caution Select the normal input buffer for the SIp pin and normal output mode and special slew rate for the SOp pin and $\overline{\text{SCKp}}$ pin.

Remark p: CSIp (p = 00, 01, 10, 11), m: Unit m (m = 0, 1), n: Channel n (n = 0, 1)

(4) During communication at same potential (CSI mode) (slave mode, $\overline{SCKp}$ … external clock input, normal slew rate)

(T_A = -40 to +125°C, 2.7 V ≤ EV_{DD0} = EV_{DD1} = V_{DD} ≤ 5.5 V, V_{SS} = EV_{SS0} = EV_{SS1} = 0 V)

Parameter	Symbol	Conditions		MIN.	TYP.	MAX.	Unit
$\overline{SCKp}$ cycle time	t_{KCY2}			8/f_{MCK}			ns
$\overline{SCKp}$ high-level width, low-level width	t_{KH2}, t_{KL2}			t_{KCY2}/2			ns
SIp setup time (to $\overline{SCKp}$↑)Note 1	t_{SIK2}			1/f_{MCK} + 20			ns
SIp hold time (from $\overline{SCKp}$↑)Note 2	t_{KSI2}			1/f_{MCK} + 31			ns
Delay time from $\overline{SCKp}$↓ to SOp outputNote 3	t_{KSO2}	C = 30 pF Note 4	4.0V ≤ V_{DD} = EV_{DD0} = EV_{DD1} ≤ 5.5V			2/f_{MCK} + 44	ns
			2.7V ≤ V_{DD} = EV_{DD0} = EV_{DD1} < 4.0V			2/f_{MCK} + 57	ns
$\overline{SSIp}$ setup time	t_{SSIK}	DAP = 0		120			ns
		DAP = 1		1/f_{MCK} + 120			ns
$\overline{SSIp}$ hold time	t_{KSSI}	DAP = 0		1/f_{MCK} + 120			ns
		DAP = 1		120			ns

Notes 1. When DAPmn = 0 and CKPmn = 0, or DAPmn = 1 and CKPmn = 1. The SIp setup time becomes "to $\overline{SCKp}$↓" when DAPmn = 0 and CKPmn = 1 or DAPmn = 1 and CKPmn = 0.

2. When DAPmn = 0 and CKPmn = 0 or DAPmn = 1 and CKPmn = 1. The SIp hold time becomes "from $\overline{SCKp}$↓" when DAPmn = 0 and CKPmn = 1 or DAPmn = 1 and CKPmn = 0.

3. When DAPmn = 0 and CKPmn = 0, or DAPmn = 1 and CKPmn = 1. The delay time to SOp output becomes "from $\overline{SCKp}$↑" when DAPmn = 0 and CKPmn = 1, or DAPmn = 1 and CKPmn = 0.

4. C is the load capacitance of the $\overline{SCKp}$ and SOp output lines.

Caution Select the normal input buffer for the SIp, $\overline{SCKp}$ and $\overline{SSIp}$ pins and normal output mode for the SOp pin.

Remarks 1. p: CSIp (p = 00, 01, 10, 11), m: Unit m (m = 0, 1), n: Channel n (n = 0, 1)

2. f_{MCK}: Serial array unit operation clock frequency

(5) During communication at same potential (CSI mode) (slave mode, $\overline{\text{SCKp}}$ … external clock input, special slew rate)

(T_A = -40 to +125°C, 4.0 V ≤ EV_{DD0} = EV_{DD1} = V_{DD} ≤ 5.5 V, V_{SS} = EV_{SS0} = EV_{SS1} = 0 V)

Parameter	Symbol	Conditions	MIN.	TYP.	MAX.	Unit
$\overline{\text{SCKp}}$ cycle time	t_{KCY2}	20 MHz < f_{MCK}	10/f_{MCK}			ns
		10 MHz < f_{MCK} ≤ 20 MHz	8/f_{MCK}			ns
		f_{MCK} ≤ 10 MHz	6/f_{MCK}			ns
$\overline{\text{SCKp}}$ high-level width, low-level width	t_{KH2}, t_{KL2}		t_{KCY2}/2			ns
SIp setup time (to $\overline{\text{SCKp}}$↑)Note1	t_{SIK2}		1/f_{MCK} + 50			ns
SIp hold time (from $\overline{\text{SCKp}}$↑)Note 2	t_{KSI2}		1/f_{MCK} + 50			ns
Delay time from $\overline{\text{SCKp}}$↓ to SOp outputNote 3	t_{KSO2}	C = 30 pFNote 4			2/f_{MCK} + 80	ns
$\overline{\text{SSIp}}$ setup time	t_{SSIK}	DAP = 0	120			ns
		DAP = 1	1/f_{MCK} + 120			ns
$\overline{\text{SSIp}}$ hold time	t_{KSSI}	DAP = 0	1/f_{MCK} + 120			ns
		DAP = 1	120			ns

Notes 1. When DAPmn = 0 and CKPmn = 0, or DAPmn = 1 and CKPmn = 1. The SIp setup time becomes "to $\overline{\text{SCKp}}$↓" when DAPmn = 0 and CKPmn = 1 or DAPmn = 1 and CKPmn = 0.

2. When DAPmn = 0 and CKPmn = 0 or DAPmn = 1 and CKPmn = 1. The SIp hold time becomes "from $\overline{\text{SCKp}}$↓" when DAPmn = 0 and CKPmn = 1 or DAPmn = 1 and CKPmn = 0.

3. When DAPmn = 0 and CKPmn = 0, or DAPmn = 1 and CKPmn = 1. The delay time to SOp output becomes "from $\overline{\text{SCKp}}$↑" when DAPmn = 0 and CKPmn = 1, or DAPmn = 1 and CKPmn = 0.

4. C is the load capacitance of the $\overline{\text{SCKp}}$ and SOp output lines.

Caution Select the normal input buffer for the SIp, $\overline{\text{SCKp}}$ and $\overline{\text{SSIp}}$ pins and normal output mode and special slew rate for the SOp pin.

Remarks 1. p: CSIp (p = 00, 01, 10, 11), m: Unit m (m = 0, 1), n: Channel n (n = 0, 1)

2. f_{MCK}: Serial array unit operation clock frequency

CSI mode connection diagram (during communication at same potential)

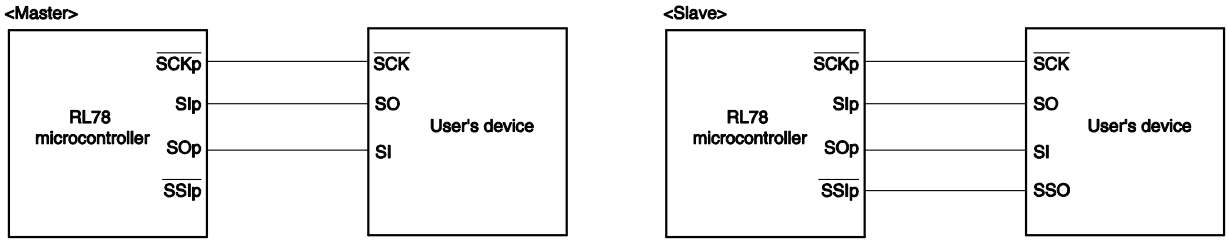

CSI mode serial transfer timing (during communication at same potential)

(When DAPmn = 0 and CKPmn = 0, or DAPmn = 1 and CKPmn = 1)

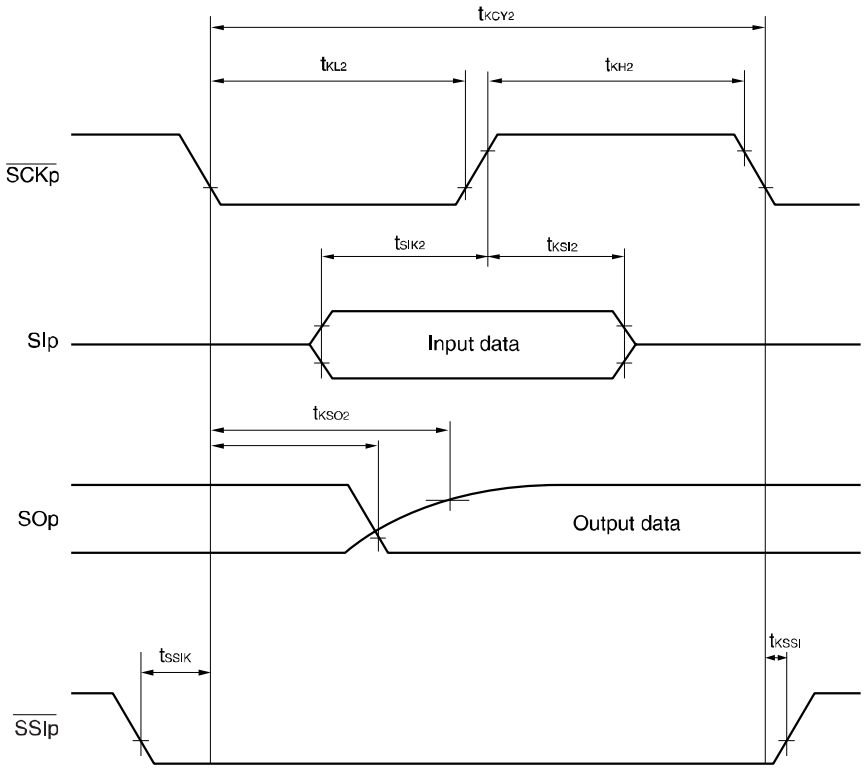

Remark p: CSIp (p = 00, 01, 10, 11), m: Unit m (m = 0, 1), n: Channel n (n = 0, 1)

CSI mode serial transfer timing (during communication at same potential)
(When DAPmn= 0 and CKPmn = 1, or DAPmn = 1 and CKPmn = 0)

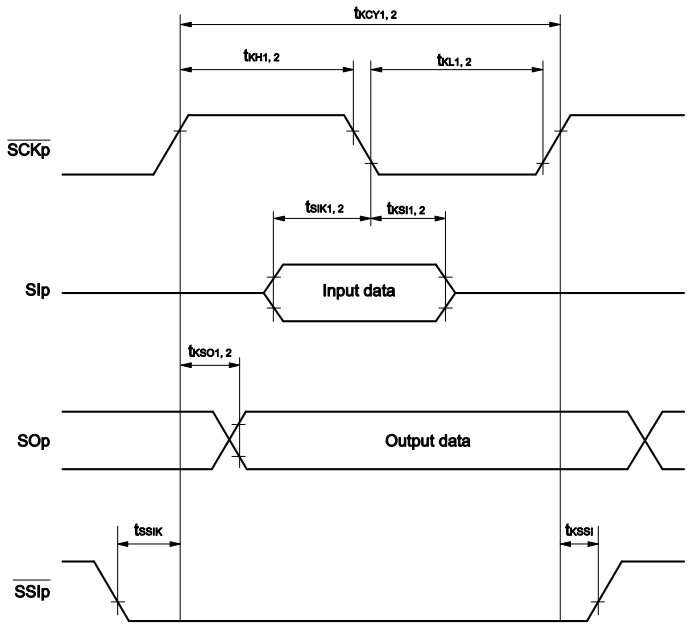

Remark p: CSIp (p = 00, 01, 10, 11), m: Unit m (m = 0, 1), n: Channel n (n = 0, 1)

(6) During communication at same potential (simplified I²C mode)
(SDAr: N-ch open-drain output (EV_{DD0} tolerance) mode, SCLr: normal output mode)

(T_A = -40 to +125°C, 2.7 V ≤ EV_{DD0} = EV_{DD1} = V_{DD} ≤ 5.5 V, V_{SS} = EV_{SS0} = EV_{SS1} = 0 V)

Parameter	Symbol	Conditions	MIN.	TYP.	MAX.	Unit
SCLr clock frequency	f_{SCL}				1000[Note]	kHz
Hold time when SCLr = "L"	t_{LOW}		475			ns
Hold time when SCLr = "H"	t_{HIGH}		475			ns
Data setup time (reception)	$t_{SU:DAT}$		$1/f_{MCK}$ + 85			ns
Data hold time (transmission)	$t_{HD:DAT}$	C_b = 50 pF, R_b = 2.7 kΩ	0		305	ns

Note $f_{CLK} \leq f_{MCK}/4$ must also be satisfied.

Simplified I²C mode connection diagram (during communication at same potential)

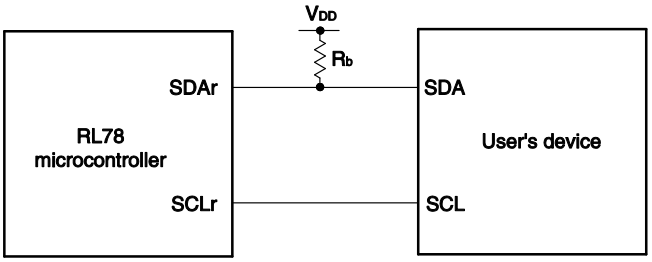

Simplified I²C mode serial transfer timing (during communication at same potential)

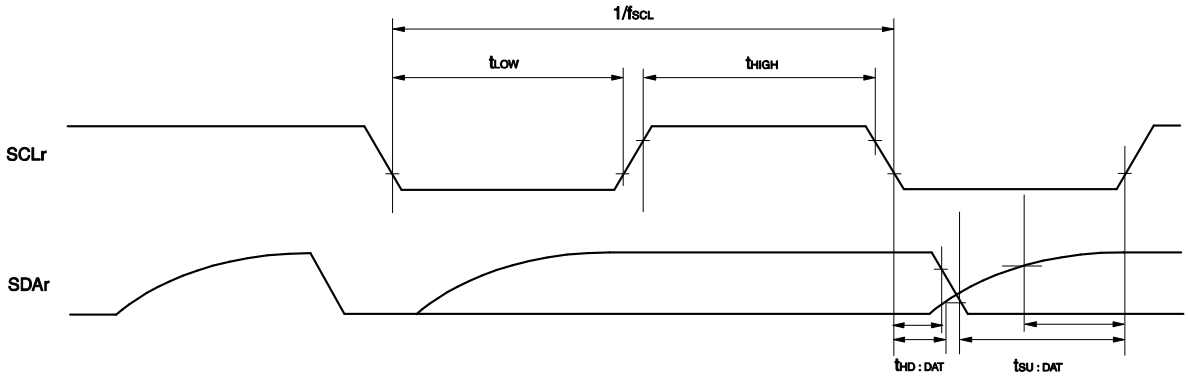

Caution Select the normal input buffer and N-ch open-drain output mode for the SDAr pin and normal output mode for the SCLr pin.

Remarks 1. R_b [Ω]: Communication line (SDAr) pull-up resistance, C_b [F]: Communication line (SCLr, SDAr) load capacitance

2. r: IICr (r = 00, 01, 10, 11)

3. f_{MCK}: Serial array unit operation clock frequency

(7) During communication at same potential (simplified I²C mode) (SDAr and SCLr: N-ch open-drain output (EV_{DD0} tolerance) mode)

(T_A = -40 to +125°C, 2.7 V ≤ EV_{DD0} = EV_{DD1} = V_{DD} ≤ 5.5 V, V_{SS} = EV_{SS0} = EV_{SS1} = 0 V)

Parameter	Symbol	Conditions	MIN.	MAX.	Unit
SCLr clock frequency	f_{SCL}			400[Note]	kHz
Hold time when SCLr = "L"	t_{LOW}	4.0 V ≤ V_{DD} ≤ 5.5 V, C_b = 100 pF, R_b = 1.7 kΩ	1300		ns
		2.7 V ≤ V_{DD} < 4.0 V, C_b = 100 pF, R_b = 2.7 kΩ			
Hold time when SCLr = "H"	t_{HIGH}	4.0 V ≤ V_{DD} ≤ 5.5 V, C_b = 100 pF, R_b = 1.7 kΩ	600		ns
		2.7 V ≤ V_{DD} < 4.0 V, C_b = 100 pF, R_b = 2.7 kΩ			
Data setup time (reception)	$t_{SU:DAT}$	4.0 V ≤ V_{DD} ≤ 5.5 V, C_b = 100 pF, R_b = 1.7 kΩ	1/f_{MCK} + 120		ns
		2.7 V ≤ V_{DD} < 4.0 V, C_b = 100 pF, R_b = 2.7 kΩ	1/f_{MCK} + 270		ns
Data hold time (transmission)	$t_{HD:DAT}$	4.0 V ≤ V_{DD} ≤ 5.5 V, C_b = 100 pF, R_b = 1.7 kΩ	0	300	ns
		2.7 V ≤ V_{DD} < 4.0 V, C_b = 100 pF, R_b = 2.7 kΩ			

Note f_{CLK} ≤ f_{MCK}/4 must also be satisfied.

Simplified I²C mode connection diagram (during communication at same potential)

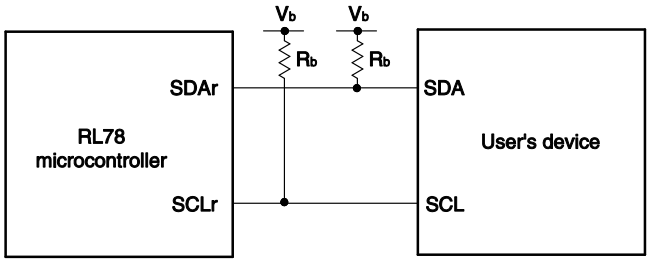

Caution Select the normal input buffer and N-ch open-drain output mode for the SDAr pin and SCLr pin.

Remarks 1. R_b [Ω]: Communication line (SDAr, SCLr) pull-up resistance, C_b [F]: Communication line (SDAr, SCLr) load capacitance, V_b[V]: Communication line voltage

2. r: IICr (r = 00, 01, 10, 11)

3. f_{MCK}: Serial array unit operation clock frequency

Simplified I²C mode serial transfer timing (during communication at same potential)

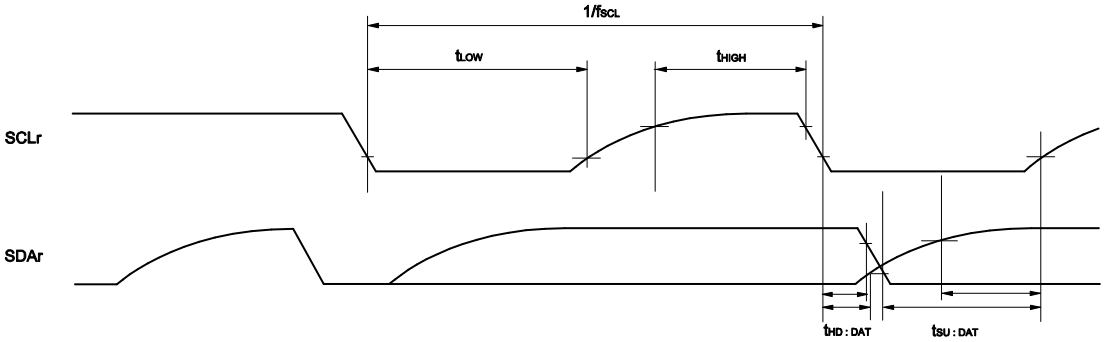

Remark r: IICr (r = 00, 01, 10, 11)

(8) Communication at different potential (UART mode) (TxD output buffer: N-ch open-drain, RxD input buffer: TTL)

(T_A = -40 to +125°C, 4.0 V ≤ EV_{DD0} = EV_{DD1} = V_{DD} ≤ 5.5 V, V_{SS} = EV_{SS0} = EV_{SS1} = 0 V)

Parameter	Symbol	Conditions			MIN.	TYP.	MAX.	Unit
Transfer rate	–	Reception	2.7 V ≤ V_b ≤ EV_{DD0}, V_{IH} = 2.2 V, V_{IL} = 0.8 V				f_{MCK}/6	bps
				Theoretical value of the maximum transfer rate Note (C_b = 30 pF)			4.0	Mbps
		Transmission	2.7 V ≤ V_b ≤ EV_{DD0}, V_{OH} = 2.2 V, V_{OL} = 0.8 V				Smaller number of the values given by f_{MCK}/6 and expression 1 is applicable.	bps
				Theoretical value of the maximum transfer rate Note (C_b = 30 pF) Normal slew rate			4.0	Mbps

Note Expression 1: Maximum transfer rate = $1 / [\{-C_b \times R_b \times \ln (1 - 2.2/V_b)\} \times 3]$

UART mode connection diagram (during communication at different potential)

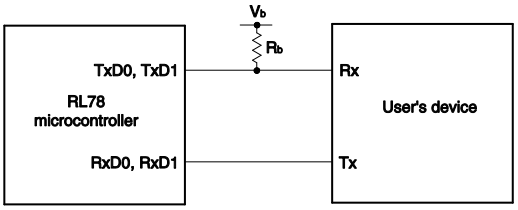

UART mode bit width (during communication at different potential) (reference)

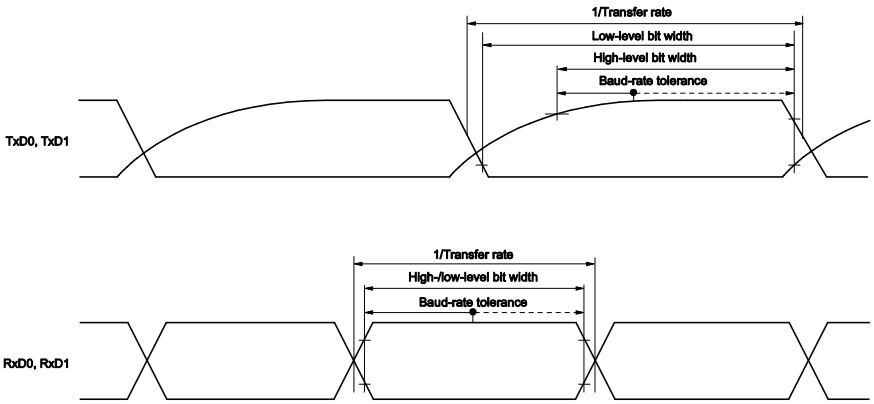

Caution Select the TTL input buffer for the RxD0 pin and RxD1 pin and N-ch open-drain output mode for the TxD0 pin and TxD1 pin.

Remarks 1. R_b [Ω]: Communication line (TxD) pull-up resistance, C_b [F]: Communication line (TxD) load capacitance, V_b [V]: Communication line voltage

2. f_{MCK}: Serial array unit operation clock frequency

(9) During communication at different potential (3-V supply system) (CSI mode) (master mode, $\overline{\text{SCKp}}$ … internal clock output, normal slew rate)

(T_A = -40 to +125°C, 4.0 V ≤ EV_{DD0} = EV_{DD1} = V_{DD} ≤ 5.5 V, V_{SS} = EV_{SS0} = EV_{SS1} = 0 V)

Parameter	Symbol	Conditions	MIN.	TYP.	MAX.	Unit
$\overline{\text{SCKp}}$ cycle time	t_{KCY1}	2.7 V ≤ V_b ≤ EV_{DD0}, C_b = 30 pF, R_b = 1.4 kΩ	400[Note3]			ns
$\overline{\text{SCKp}}$ high-level width	t_{KH1}	2.7 V ≤ V_b ≤ EV_{DD0}, C_b = 30 pF, R_b = 1.4 kΩ	t_{KCY1}/2 – 75			ns
$\overline{\text{SCKp}}$ low-level width	t_{KL1}	2.7 V ≤ V_b ≤ EV_{DD0}, C_b = 30 pF, R_b = 1.4 kΩ	t_{KCY1}/2 – 20			ns
SIp setup time (to $\overline{\text{SCKp}}$↑)[Note 1]	t_{SIK1}	2.7 V ≤ V_b ≤ EV_{DD0}, C_b = 30 pF, R_b = 1.4 kΩ	150			ns
SIp setup time (to $\overline{\text{SCKp}}$↓)[Note 2]	t_{SIK1}	2.7 V ≤ V_b ≤ EV_{DD0}, C_b = 30 pF, R_b = 1.4 kΩ	70			ns
SIp hold time (from $\overline{\text{SCKp}}$↑)[Note 1]	t_{KSI1}	2.7 V ≤ V_b ≤ EV_{DD0}, C_b = 30 pF, R_b = 1.4 kΩ	30			ns
SIp hold time (from $\overline{\text{SCKp}}$↓)[Note 2]	t_{KSI1}	2.7 V ≤ V_b ≤ EV_{DD0}, C_b = 30 pF, R_b = 1.4 kΩ	30			ns
Delay time from $\overline{\text{SCKp}}$↓ to SOp output[Note1]	t_{KSO1}	2.7 V ≤ V_b ≤ EV_{DD0}, C_b = 30 pF, R_b = 1.4 kΩ			120	ns
Delay time from $\overline{\text{SCKp}}$↑ to SOp output[Note2]	t_{KSO1}	2.7 V ≤ V_b ≤ EV_{DD0}, C_b = 30 pF, R_b = 1.4 kΩ			40	ns

Notes 1. When DAPmn = 0 and CKPmn = 0, or DAPmn = 1 and CKPmn = 1.

2. When DAPmn = 0 and CKPmn = 1, or DAPmn = 1 and CKPmn = 0.

3. t_{KCY1} ≥ 4/f_{CLK} must also be satisfied.

CSI mode connection diagram (during communication at different potential)

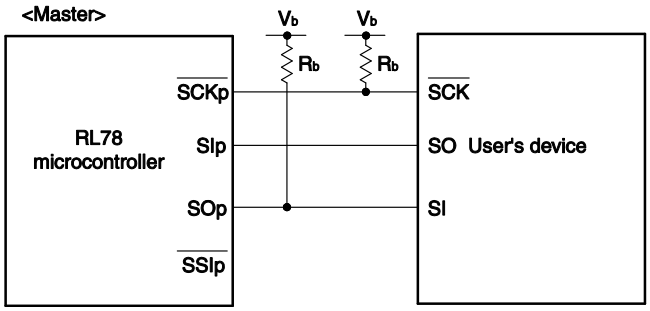

Caution Select the TTL input buffer for the SIp pin and N-ch open-drain output mode for the SOp pin and $\overline{\text{SCK}}$p pin.

Remarks 1. R_b [Ω]: Communication line ($\overline{\text{SCK}}$p, SOp) pull-up resistance, C_b [F]: Communication line (SOp, $\overline{\text{SCK}}$p) load capacitance, V_b [V]: Communication line voltage

2. p: CSIp (p = 00, 01, 10, 11), m: Unit m (m = 0, 1), n: Channel n (n = 0, 1)

3. AC characteristics of the serial array unit during communication at different potential in CSI mode are measured with the V_{IH} and V_{IL} below:

When 4.0 V ≤ EV_{DD0} ≤ 5.5 V, 2.7 V ≤ V_b ≤ 4.0 V: V_{IH} = 2.2 V, V_{IL} = 0.8 V

CSI mode serial transfer timing (master mode) (during communication at different potential)
(When DAPmn = 0 and CKPmn = 0, or DAPmn = 1 and CKPmn = 1)

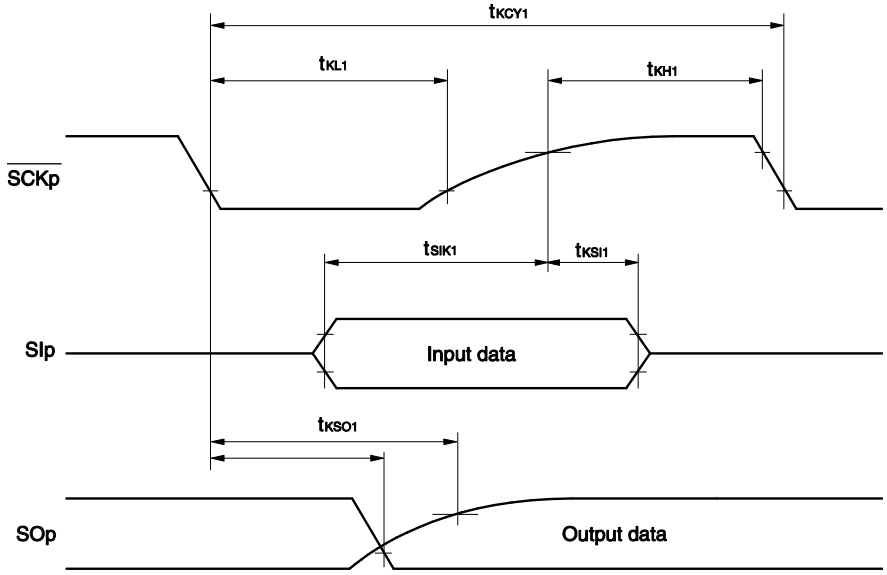

CSI mode serial transfer timing (master mode) (during communication at different potential)
(When DAPmn= 0 and CKPmn = 1, or DAPmn = 1 and CKPmn = 0)

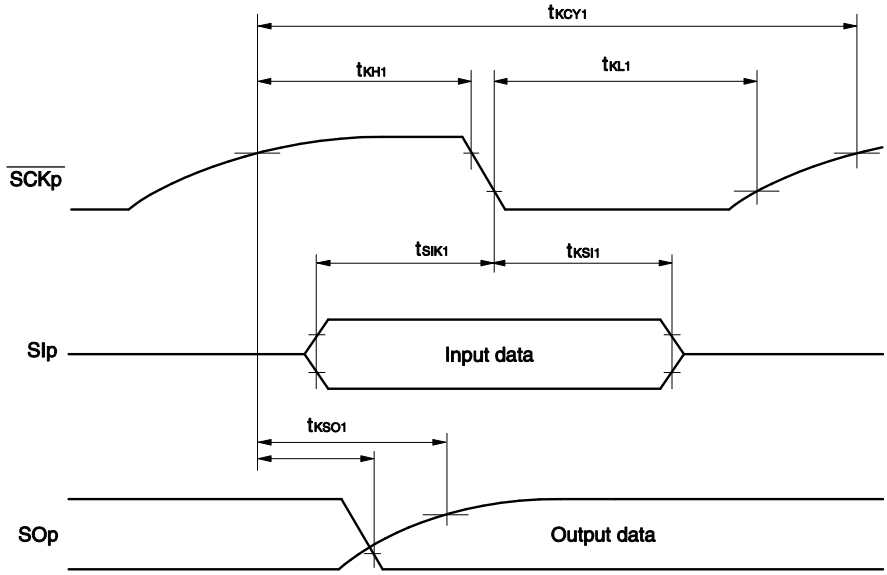

(10) During communication at different potential (3-V supply system) (CSI mode) (slave mode, $\overline{\text{SCKp}}$ … external clock input, normal slew rate)

(T_A = -40 to +125°C, 4.0 V ≤ EV_{DD0} = EV_{DD1} = V_{DD} ≤ 5.5 V, V_{SS} = EV_{SS0} = EV_{SS1} = 0 V)

Parameter	Symbol	Conditions		MIN.	TYP.	MAX.	Unit
$\overline{\text{SCKp}}$ cycle time	t_{KCY2}	2.7 V ≤ V_b ≤ V_{DD}	20 MHz < f_{MCK} ≤ 24 MHz	12/f_{MCK}			ns
			8 MHz < f_{MCK} ≤ 20 MHz	10/f_{MCK}			ns
			4 MHz < f_{MCK} ≤ 8 MHz	8/f_{MCK}			ns
			f_{MCK} ≤ 4 MHz	6/f_{MCK}			ns
$\overline{\text{SCKp}}$ high-level width, low-level width	t_{KH2}, t_{KL2}	2.7 V ≤ V_b ≤ V_{DD}		t_{KCY2}/2 – 20			ns
SIp setup time (to $\overline{\text{SCKp}}$↑)[Note 1]	t_{SIK2}			90			ns
SIp hold time (from $\overline{\text{SCKp}}$↑)[Note 2]	t_{KSI2}			1/f_{MCK} + 50			ns
Delay time from $\overline{\text{SCKp}}$↓ to SOp output[Note 3]	t_{KSO2}	2.7 V ≤ V_b ≤ V_{DD}, C_b = 30 pF, R_b = 1.4 kΩ				2/f_{MCK} + 120	ns
$\overline{\text{SSIp}}$ setup time	t_{SSIK}	DAP = 0		120			ns
		DAP = 1		1/f_{MCK} + 120			ns
$\overline{\text{SSIp}}$ hold time	t_{KSSI}	DAP = 0		1/f_{MCK} + 120			ns
		DAP = 1		120			ns

Notes 1. When DAPmn = 0 and CKPmn = 0, or DAPmn = 1 and CKPmn = 1. The SIp setup time becomes "to $\overline{\text{SCKp}}$↓" when DAPmn = 0 and CKPmn = 1 or DAPmn = 1 and CKPmn = 0.

2. When DAPmn = 0 and CKPmn = 0 or DAPmn = 1 and CKPmn = 1. The SIp hold time becomes "from $\overline{\text{SCKp}}$↓" when DAPmn = 0 and CKPmn = 1 or DAPmn = 1 and CKPmn = 0.

3. When DAPmn = 0 and CKPmn = 0, or DAPmn = 1 and CKPmn = 1. The delay time to SOp output becomes "from $\overline{\text{SCKp}}$↑" when DAPmn = 0 and CKPmn = 1, or DAPmn = 1 and CKPmn = 0.

CSI mode connection diagram (during communication at different potential)

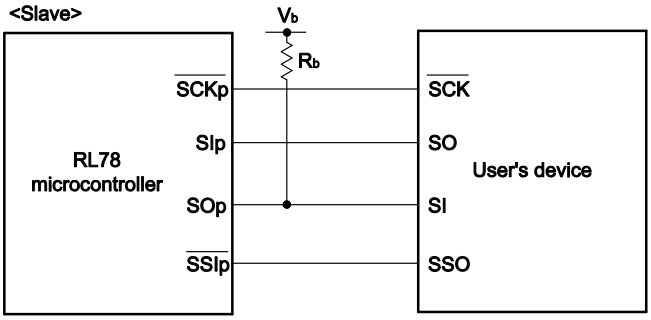

Caution Select the TTL input buffer for the SIp, $\overline{\text{SCKp}}$ and $\overline{\text{SSIp}}$ pins and N-ch open-drain output mode for the SOp pin.

Remarks 1. R_b [Ω]: Communication line (SOp) pull-up resistance, C_b [F]: Communication line (SOp) load capacitance, V_b [V]: Communication line voltage

2. p: CSIp (p = 00, 01, 10, 11), m: Unit m (m = 0, 1), n: Channel n (n = 0, 1)

3. AC characteristics of the serial array unit during communication at different potential in CSI mode are measured with the V_{IH} and V_{IL} below:

When 4.0 V ≤ EV_{DD0} ≤ 5.5 V, 2.7 V ≤ V_b ≤ 4.0 V: V_{IH} = 2.2 V, V_{IL} = 0.8 V

CSI mode serial transfer timing (slave mode) (during communication at different potential)

(When DAPmn = 0 and CKPmn = 0, or DAPmn = 1 and CKPmn = 1)

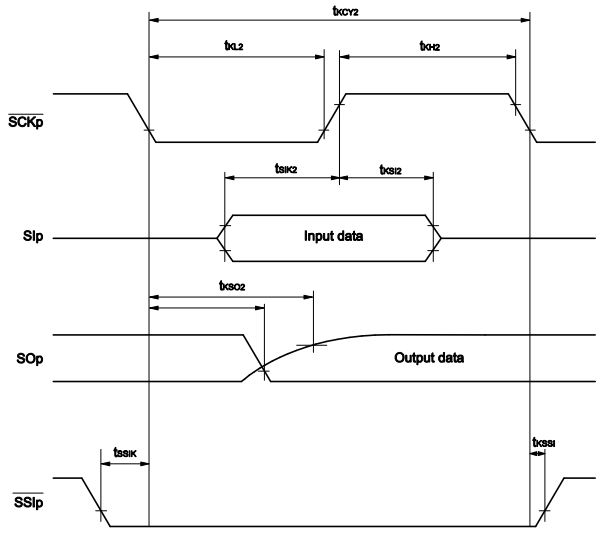

CSI mode serial transfer timing (slave mode) (during communication at different potential)

(When DAPmn= 0 and CKPmn = 1, or DAPmn = 1 and CKPmn = 0)

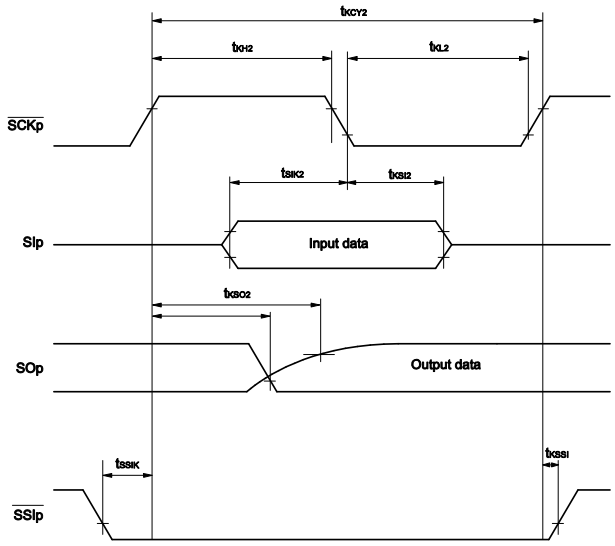

(11) During communication at different potential (3-V supply system) (simplified I^2C mode)
(SDAr: TTL input buffer mode or N-ch open-drain output (EV_{DD0} tolerance) mode, SCLr: N-ch open-drain output (EV_{DD0} tolerance) mode)

(T_A = -40 to +125°C, 4.0 V ≤ EV_{DD0} = EV_{DD1} = V_{DD} ≤ 5.5 V, V_{SS} = EV_{SS0} = EV_{SS1} = 0 V)

Parameter	Symbol	Conditions	MIN.	MAX.	Unit
SCLr clock frequency	f_{SCL}	2.7 V ≤ V_b ≤ 4.0 V, C_b = 100 pF, R_b = 1.4 kΩ		400[Note]	kHz
Hold time when SCLr = "L"	t_{LOW}	2.7 V ≤ V_b ≤ 4.0 V, C_b = 100 pF, R_b = 1.4 kΩ	1200		ns
Hold time when SCLr = "H"	t_{HIGH}	2.7 V ≤ V_b ≤ 4.0 V, C_b = 100 pF, R_b = 1.4 kΩ	600		ns
Data setup time (reception)	$t_{SU:DAT}$	2.7 V ≤ V_b ≤ 4.0 V, C_b = 100 pF, R_b = 1.4 kΩ	135 + 1/f_{MCK}		ns
Data hold time (transmission)	$t_{HD:DAT}$	2.7 V ≤ V_b ≤ 4.0 V, C_b = 100 pF, R_b = 1.4 kΩ	0	140	ns

Note f_{SCL} ≤ f_{MCK}/4 must also be satisfied.

Simplified I²C mode connection diagram (during communication at different potential)

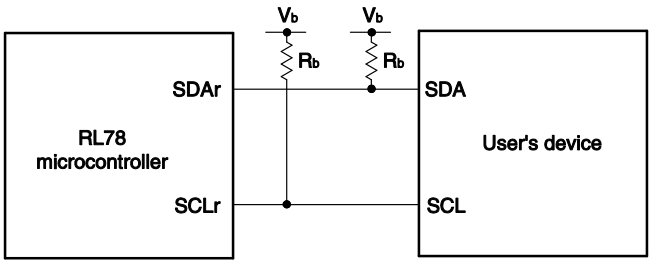

Simplified I²C mode serial transfer timing (during communication at different potential)

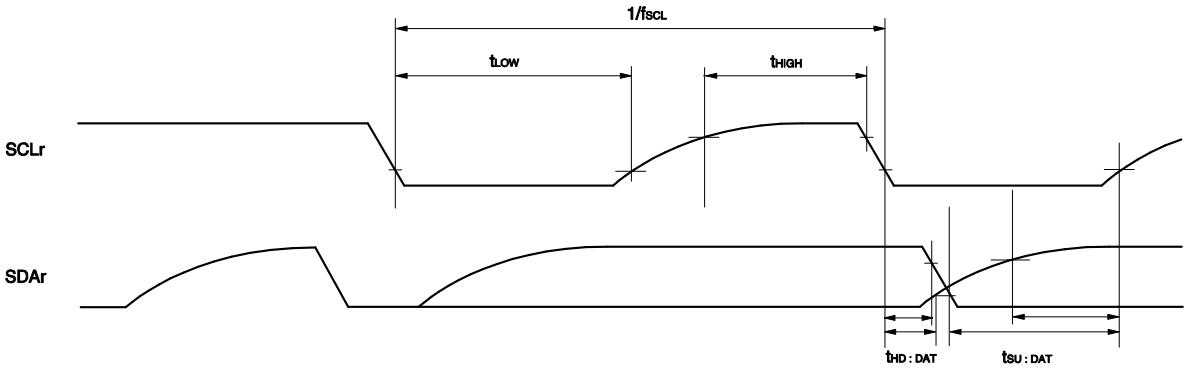

Caution Select the TTL input buffer and the N-ch open-drain output mode for the SDAr pin and N-ch open-drain output mode for the SCLr pin.

Remarks 1. R_b [Ω]: Communication line (SDAr, SCLr) pull-up resistance, C_b [F]: Communication line (SDAr, SCLr) load capacitance, V_b [V]: Communication line voltage

2. f_{MCK}: Serial array unit operation clock frequency

35.5.2 Serial Interface IICA

(T_A = -40 to +125°C, 2.7 V ≤ EV_{DD0} = EV_{DD1} = V_{DD} ≤ 5.5 V, V_{SS} = EV_{SS0} = EV_{SS1} = 0 V)

Parameter	Symbol	Conditions	Normal Mode		Fast Mode		Fast Mode Plus		Unit
			MIN.	MAX.	MIN.	MAX.	MIN.	MAX.	
SCLA0 clock frequency	f_{SCL}	Fast mode plus: 10 MHz ≤ f_{CLK}					0	1000	kHz
		Fast mode: 3.5 MHz ≤ f_{CLK}			0	400			kHz
		Normal mode: 1 MHz ≤ f_{CLK}	0	100					kHz
Setup time of restart condition[Note 1]	$t_{SU:STA}$		4.7		0.6		0.26		μs
Hold time	$t_{HD:STA}$		4.0		0.6		0.26		μs
Hold time when SCLA0 = "L"	t_{LOW}		4.7		1.3		0.5		μs
Hold time when SCLA0 = "H"	t_{HIGH}		4.0		0.6		0.26		μs
Data setup time (reception)	$t_{SU:DAT}$		250		100		50		ns
Data hold time (transmission)[Note 2]	$t_{HD:DAT}$		0	3.45	0	0.9	0		μs
Setup time of stop condition	$t_{SU:STO}$		4.0		0.6		0.26		μs
Bus-free time	t_{BUF}		4.7		1.3		0.5		μs

Notes 1. The first clock pulse is generated after this period when the start/restart condition is detected.

2. The maximum value (MAX.) of $t_{HD:DAT}$ is during normal transfer and a wait state is inserted in the $\overline{ACK}$ (acknowledge) timing.

Remark The maximum value of C_b (communication line capacitance) and the value of R_b (communication line pull-up resistor) at that time in each mode are as follows.

Standard mode: C_b = 400 pF, R_b = 2.7 kΩ

Fast mode: C_b = 320 pF, R_b = 1.1 kΩ

Fast mode plus: C_b = 120 pF, R_b = 1.1 kΩ

IICA serial transfer timing

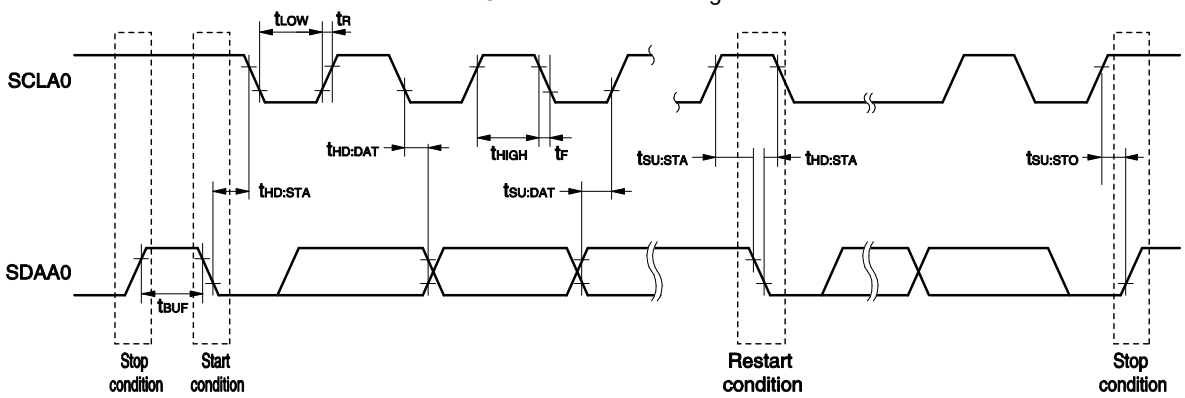

35.5.3 On-chip Debug (UART)

(T_A = -40 to +125°C, 2.7 V ≤ EV_{DD0} = EV_{DD1} = V_{DD} ≤ 5.5 V, V_{SS} = EV_{SS0} = EV_{SS1} = 0 V)

Parameter	Symbol	Conditions	MIN.	TYP.	MAX.	Unit
Transfer rate	-		115.2 k		1 M	bps

35.5.4 LIN/UART Module (RLIN3) UART Mode

(T_A = -40 to +125°C, 2.7 V ≤ EV_{DD0} = EV_{DD1} = V_{DD} ≤ 5.5 V, V_{SS} = EV_{SS0} = EV_{SS1} = 0 V)

Parameter	Symbol	Conditions		MIN.	TYP.	MAX.	Unit
Transfer rate	-	Operation mode, HALT mode	LIN communication clock source (f_{CLK} or f_{MX}): 4 to 24 MHz			4000	kbps
		SNOOZE mode	LIN communication clock source (f_{CLK}): 1 to 24 MHz FRQSEL4 = 0 in the user option byte (000C2H/020C2H)			4.8	
			LIN communication clock source (f_{CLK}): 1 to 24 MHz FRQSEL4 = 1 in the user option byte (000C2H/020C2H)			2.4	

35.6 Analog Characteristics

35.6.1 A/D Converter Characteristics

(1) When AV_{REF} (+) = AV_{REFP}/ANI0 (ADREFP1 = 0, ADREFP0 = 1), AV_{REF} (-) = AV_{REFM}/ANI1 (ADREFM = 1), target ANI pin: ANI2 to ANI23 (power supply: V_{DD})

(T_A = -40 to +125°C, 2.7 V ≤ EV_{DD0} = EV_{DD1} = V_{DD} ≤ 5.5 V, V_{SS} = EV_{SS0} = EV_{SS1} = 0 V, Reference voltage (+) = AV_{REFP}, Reference voltage (-) = AV_{REFM} = 0 V)

Parameter	Symbol	Conditions		MIN.	TYP.	MAX.	Unit
Resolution	RES			8		10	bit
Overall error[Note 1]	AINL	10-bit resolution AV_{REFP} = V_{DD}	4.0 V ≤ V_{DD} ≤ 5.5 V		1.2	±3.0	LSB
			2.7 V ≤ V_{DD} < 4.0 V		1.2	±3.5	LSB
Conversion time	t_{CONV}	10-bit resolution AV_{REFP} = V_{DD}	4.0 V ≤ V_{DD} ≤ 5.5 V	2.125		39	μs
			2.7 V ≤ V_{DD} < 4.0 V	3.1875		39	μs
Zero-scale error[Notes 1, 2]	EZS	10-bit resolution AV_{REFP} = V_{DD}	2.7 V ≤ V_{DD} ≤ 5.5 V			±0.25	%FSR
Full-scale error[Notes 1, 2]	EFS	10-bit resolution AV_{REFP} = V_{DD}	2.7 V ≤ V_{DD} ≤ 5.5 V			±0.25	%FSR
Integral linearity error[Note 1]	ILE	10-bit resolution AV_{REFP} = V_{DD}	2.7 V ≤ V_{DD} ≤ 5.5 V			±2.5	LSB
Differential linearity error[Note 1]	DLE	10-bit resolution AV_{REFP} = V_{DD}	2.7 V ≤ V_{DD} ≤ 5.5 V			±1.5	LSB
Reference voltage (+)	AV_{REFP}			2.7		V_{DD}	V
Analog input voltage	V_{AIN}			0		AV_{REFP}	V
Internal reference voltage (+)	V_{BGR}	2.7 V ≤ V_{DD} ≤ 5.5 V		1.38	1.45	1.5	V

Notes 1. Excludes quantization error (±1/2 LSB).

2. This value is indicated as a ratio (%FSR) to the full-scale value.

(2) When AV_{REF} (+) = AV_{REFP}/ANI0 (ADREFP1 = 0, ADREFP0 = 1), AV_{REF} (-) = AV_{REFM}/ANI1 (ADREFM = 1), target ANI pin: ANI24 to ANI30 (power supply: EV_{DD0})

(T_A = -40 to +125°C, 2.7 V ≤ EV_{DD0} = EV_{DD1} = V_{DD} ≤ 5.5 V, V_{SS} = EV_{SS0} = EV_{SS1} = 0 V, Reference voltage (+) = AV_{REFP}, Reference voltage (-) = AV_{REFM} = 0 V)

Parameter	Symbol	Conditions		MIN.	TYP.	MAX.	Unit
Resolution	RES			8		10	bit
Overall error[Note 1]	AINL	10-bit resolution AV_{REFP} = V_{DD}	4.0 V ≤ V_{DD} ≤ 5.5 V		1.2	±4.5	LSB
			2.7 V ≤ V_{DD} < 4.0 V		1.2	±5.0	LSB
Conversion time	t_{CONV}	10-bit resolution AV_{REFP} = V_{DD}	4.0 V ≤ V_{DD} ≤ 5.5 V	2.125		39	μs
			2.7 V ≤ V_{DD} < 4.0 V	3.1875		39	μs
Zero-scale error[Notes 1, 2]	EZS	10-bit resolution AV_{REFP} = V_{DD}	2.7 V ≤ V_{DD} ≤ 5.5 V			±0.35	%FSR
Full-scale error[Notes 1, 2]	EFS	10-bit resolution AV_{REFP} = V_{DD}	2.7 V ≤ V_{DD} ≤ 5.5 V			±0.35	%FSR
Integral linearity error[Note 1]	ILE	10-bit resolution AV_{REFP} = V_{DD}	2.7 V ≤ V_{DD} ≤ 5.5 V			±3.5	LSB
Differential linearity error[Note 1]	DLE	10-bit resolution AV_{REFP} = V_{DD}	2.7 V ≤ V_{DD} ≤ 5.5 V			±2.0	LSB
Reference voltage (+)	AV_{REFP}			2.7		V_{DD}	V
Analog input voltage	V_{AIN}			0		AV_{REFP} and EV_{DD0}	V
Internal reference voltage (+)	V_{BGR}	2.7 V ≤ V_{DD} ≤ 5.5 V		1.38	1.45	1.5	V

Notes 1. Excludes quantization error (±1/2 LSB).

2. This value is indicated as a ratio (%FSR) to the full-scale value.

(3) When AV_{REF} (+) = V_{DD} (ADREFP1 = 0, ADREFP0 = 0), AV_{REF} (-) = V_{SS} (ADREFM = 0), target ANI pin: ANI0 to ANI23, ANI24 to ANI30

(T_A = -40 to +125°C, 2.7 V ≤ EV_{DD0} = EV_{DD1} = V_{DD} ≤ 5.5 V, V_{SS} = EV_{SS0} = EV_{SS1} = 0 V, Reference voltage (+) = V_{DD}, Reference voltage (-) = V_{SS})

Parameter	Symbol	Conditions		MIN.	TYP.	MAX.	Unit
Resolution	RES			8		10	bit
Overall error[Note 1]	AINL	10-bit resolution ANI0 to ANI23	4.0 V ≤ V_{DD} ≤ 5.5 V		1.2	±5.0	LSB
			2.7 V ≤ V_{DD} < 4.0 V		1.2	±5.5	LSB
		10-bit resolution ANI24 to ANI30	4.0 V ≤ V_{DD} ≤ 5.5 V		1.2	±6.5	LSB
			2.7 V ≤ V_{DD} < 4.0 V		1.2	±7.0	LSB
Conversion time	t_{CONV}	10-bit resolution	4.0 V ≤ V_{DD} ≤ 5.5 V	2.125		39	μs
			2.7 V ≤ V_{DD} < 4.0 V	3.1875		39	μs
Zero-scale error[Notes 1, 2]	EZS	10-bit resolution ANI0 to ANI23	2.7 V ≤ V_{DD} ≤ 5.5 V			±0.50	%FSR
		10-bit resolution ANI24 to ANI30	2.7 V ≤ V_{DD} ≤ 5.5 V			±0.60	%FSR
Full-scale error[Notes 1, 2]	EFS	10-bit resolution ANI0 to ANI23	2.7 V ≤ V_{DD} ≤ 5.5 V			±0.50	%FSR
		10-bit resolution ANI24 to ANI30	2.7 V ≤ V_{DD} ≤ 5.5 V			±0.60	%FSR
Integral linearity error[Note 1]	ILE	10-bit resolution ANI0 to ANI23	2.7 V ≤ V_{DD} ≤ 5.5 V			±3.5	LSB
		10-bit resolution ANI24 to ANI30	2.7 V ≤ V_{DD} ≤ 5.5 V			±4.0	LSB
Differential linearity error[Note 1]	DLE	10-bit resolution	2.7 V ≤ V_{DD} ≤ 5.5 V			±2.0	LSB
Analog input voltage	V_{AIN}	ANI0 to ANI23[Note 3]		0		V_{DD}	V
		ANI24 to ANI30[Note 3]		EV_{SS}		EV_{DD0}	V
Internal reference voltage (+)	V_{BGR}	2.7 V ≤ V_{DD} ≤ 5.5 V		1.38	1.45	1.5	V

Notes 1. Excludes quantization error (±1/2 LSB).

2. This value is indicated as a ratio (%FSR) to the full-scale value.

3. The number of pins depends on the product. For details, refer to **2.1 Pin Function List**.

<R> **(4) When AV_{REF} (+) = internal reference voltage (ADREFP1 = 1, ADREFP0 = 0), AV_{REF} (-) = AV_{REFM}/ANI1 (ADREFM = 1), target ANI pin: ANI0, ANI2 to ANI23, ANI24 to ANI30**

(T_A = -40 to +125°C, 2.7 V ≤ EV_{DD0} = EV_{DD1} = V_{DD} ≤ 5.5 V, V_{SS} = EV_{SS0} = EV_{SS1} = 0 V, Reference voltage (+) = V_{BGR}, Reference voltage (-) = AV_{REFM} = 0 V)

Parameter	Symbol	Conditions		MIN.	TYP.	MAX.	Unit
Resolution	RES				8		bit
Conversion time	t_{CONV}	8-bit resolution	2.7 V ≤ V_{DD} ≤ 5.5 V	17		39	μs
Zero-scale error[Notes 1, 2]	EZS	8-bit resolution	2.7 V ≤ V_{DD} ≤ 5.5 V			±0.60	%FSR
Integral linearity error[Note 1]	ILE	8-bit resolution	2.7 V ≤ V_{DD} ≤ 5.5 V			±2.0	LSB
Differential linearity error[Note 1]	DLE	8-bit resolution	2.7 V ≤ V_{DD} ≤ 5.5 V			±1.0	LSB
Reference voltage (+)	V_{BGR}			1.38	1.45	1.5	V
Analog input voltage	V_{AIN}			0		V_{BGR}	V

Notes 1. Excludes quantization error (±1/2 LSB).

2. This value is indicated as a ratio (%FSR) to the full-scale value.

35.6.2 Temperatures Sensor Characteristics

(T_A = -40 to +125°C, 2.7 V ≤ EV_{DD0} = EV_{DD1} = V_{DD} ≤ 5.5 V, V_{SS} = EV_{SS0} = EV_{SS1} = 0 V)

Parameter	Symbol	Conditions	MIN.	TYP.	MAX.	Unit
Temperature sensor output voltage	V_{TMPS25}	Setting ADS register = 80H, T_A = +25°C		1.1		V
Reference output voltage	V_{CONST}	Setting ADS register = 81H	1.38	1.45	1.5	V
Temperature coefficient	F_{VTMPS}	Temperature sensor that depends on the temperature		-3.3		mV/°C
Operation stabilization wait time	t_{AMP}		5			μs

35.6.3 D/A Converter Characteristics

(T_A = -40 to +125°C, 2.7 V ≤ EV_{DD0} = EV_{DD1} = V_{DD} ≤ 5.5 V, V_{SS} = EV_{SS0} = EV_{SS1} = 0 V)

Parameter	Symbol	Conditions		MIN.	TYP.	MAX.	Unit
Resolution	RES					8	bit
Overall error	AINL	Rload = 4 MΩ	2.7 V ≤ V_{DD} ≤ 5.5 V			±2.5	LSB
		Rload = 8 MΩ	2.7 V ≤ V_{DD} ≤ 5.5 V			±2.5	LSB
Settling time	t_{SET}	Cload = 20 pF	2.7 V ≤ V_{DD} ≤ 5.5 V			3	μs

35.6.4 Comparator Characteristics

(T_A = -40 to +125°C, 2.7 V ≤ EV_{DD0} = EV_{DD1} = V_{DD} ≤ 5.5 V, V_{SS} = EV_{SS0} = EV_{SS1} = 0 V)

Parameter	Symbol	Conditions	MIN.	TYP.	MAX.	Unit
Input offset voltage	V_{IOCMP}			±5	±40	mV
Input voltage range	V_{ICMP}		0		V_{DD}	V
Response time	t_{CR}, t_{CF}	Input amplitude ±100 mV		70	200	ns
Stabilization wait time during input channel switching[Note 1]	t_{WAIT}	Input amplitude ±100 mV	300			ns
Operation stabilization wait time[Note 2]	t_{CMP}	3.3 V ≤ V_{DD} ≤ 5.5 V	1			μs
		2.7 V ≤ V_{DD} < 3.3 V	3			μs

Notes 1. Period of time from when the comparator input channel is switched until the comparator is switched to output

2. Period of time from when the comparator operation is enabled (HCMPON bit in CMPCTL is set to 1) until the comparator satisfies the DC/AC characteristics.

35.6.5 POR Circuit Characteristics

(T_A = -40 to +125°C, V_{SS} = EV_{SS0} = EV_{SS1} = 0 V)

Parameter	Symbol	Conditions	MIN.	TYP.	MAX.	Unit
<R> Detection voltage[Note 1]	V_{POR}	Power supply rise time	1.48	1.56	1.62	V
	V_{PDR}	Power supply fall time	1.47	1.55	1.61	V
<R> Minimum pulse width[Note 2]	T_{PW}		300			μs
Detection delay time	T_{PD}				350	μs

Notes 1. This indicates the POR circuit characteristics, and normal operation is not guaranteed under the condition of less than lower limit operation voltage (2.7 V).

<R> 2. Minimum time required for a POR reset when VDD exceeds below VPDR.

<R>

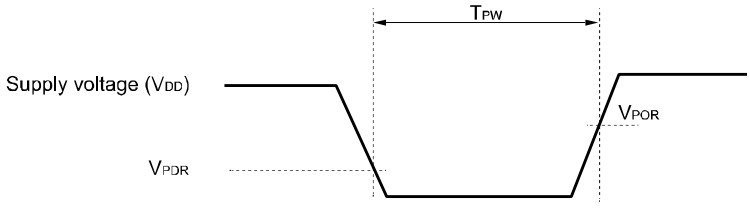

35.6.6 LVD Circuit Characteristics

(1) LVD detection voltage of interrupt mode or reset mode

(T_A = -40 to +125°C, $V_{PDR} \leq EV_{DD0} = EV_{DD1} = V_{DD} \leq 5.5$ V, $V_{SS} = EV_{SS0} = EV_{SS1} = 0$ V)

Parameter		Symbol	Conditions	MIN.	TYP.	MAX.	Unit
Detection voltage	Supply voltage level	V_{LVD0}	Power supply rise time	4.62	4.74	4.94	V
			Power supply fall time	4.52	4.64	4.84	V
		V_{LVD1}	Power supply rise time	4.50	4.62	4.82	V
			Power supply fall time	4.40	4.52	4.71	V
		V_{LVD2}	Power supply rise time	4.30	4.42	4.61	V
			Power supply fall time	4.21	4.32	4.51	V
		V_{LVD3}	Power supply rise time	3.13	3.22	3.39	V
			Power supply fall time	3.07	3.15	3.31	V
		V_{LVD4}	Power supply rise time	2.95	3.02	3.17	V
			Power supply fall time	2.89	2.96	3.09	V
		V_{LVD5}	Power supply rise time	2.74	2.81	2.95	V
			Power supply fall time	2.68 Note	2.75	2.88	V
Minimum pulse width		t_{LW}		300			μs
Detection delay time		t_{LD}				300	μs

Note The minimum value exceeds below the lower limit operation voltage (2.7 V), however, in reset mode, normal operation (same behavior when V_{DD} = 2.7 V) is possible until a reset is effected at the power supply falling time.

(2) LVD detection voltage of interrupt & reset mode

(T_A = -40 to +125°C, $V_{PDR} \leq EV_{DD0} = EV_{DD1} = V_{DD} \leq 5.5$ V, $V_{SS} = EV_{SS0} = EV_{SS1} = 0$ V)

Parameter	Symbol	Conditions		MIN.	TYP.	MAX.	Unit
Interrupt and reset mode	V_{LVD5}	VPOC2, VPOC1, VPOC0 = 0, 0, 1 Note 1, falling reset voltage: 2.75 V		2.68 Note 2	2.75	2.88	V
<R>	V_{LVD2}	LVIS1, LVIS0 = 0, 0	Rising release reset voltage	4.30	4.42	4.61	V
			Falling interrupt voltage	4.21	4.32	4.51	V
	V_{LVD5}	VPOC2, VPOC1, VPOC0 = 0, 1, 0 Note 1, falling reset voltage: 2.75 V		2.68 Note 2	2.75	2.88	V
	V_{LVD1}	LVIS1, LVIS0 = 0, 0	Rising release reset voltage	4.50	4.62	4.82	V
			Falling interrupt voltage	4.40	4.52	4.71	V
	V_{LVD5}	VPOC2, VPOC1, VPOC0 = 0, 1, 1 Note 1, falling reset voltage: 2.75 V		2.68 Note 2	2.75	2.88	V
	V_{LVD3}	LVIS1, LVIS0 = 0, 1	Rising release reset voltage	3.13	3.22	3.39	V
			Falling interrupt voltage	3.07	3.15	3.31	V
	V_{LVD0}	LVIS1, LVIS0 = 0, 0	Rising release reset voltage	4.62	4.74	4.94	V
			Falling interrupt voltage	4.52	4.64	4.84	V

Notes 1. These values indicate setting values of option bytes.

2. The minimum value exceeds below the lower limit operation voltage (2.7 V), however, in reset mode, normal operation (same behavior when V_{DD} = 2.7 V) is possible until a reset is effected at the power supply falling time.

35.7 Power Supply Voltage Rising Time

(T_A = -40 to +125°C, V_{SS} = EV_{SS0} = EV_{SS1} = 0 V)

Parameter	Symbol	Conditions	MIN.	TYP.	MAX.	Unit
Maximum power supply voltage rising slope	S_{vrmax}	0 V → V_{DD} (VPOC2 = 0 or 1[Note 2])			50[Note 3]	V/ms
Minimum power supply voltage rising slope [Note 1]	S_{vrmin}	0 V → 2.7 V	6.5			V/ms

Notes 1. The minimum power supply voltage rising slope is applied only under the following condition.
When the voltage detection (LVD) circuit is not used (VPOC2 = 1) and an external reset circuit is not used or when a reset is not effected until V_{DD} = 2.7 V.

2. These values indicate setting values of option bytes.

3. If the power supply drops below V_{PDR} and a POR reset is effected, this specification is also applied when the power supply is recovered without dropping to 0 V.

<R> **35.8 RAM Data Retention Characteristics**

(T_A = -40 to +125°C, V_{SS} = EV_{SS0} = EV_{SS1} = 0 V)

Parameter	Symbol	Conditions	MIN.	TYP.	MAX.	Unit
Data retention supply voltage	V_{DDDR}		1.47[Note]		5.5	V

<R> **Note** This depends on the POR detection voltage. For a falling voltage, data in RAM are retained until the voltage reaches the level that triggers a POR reset but not once it reaches the level at which a POR reset is generated.

<R>

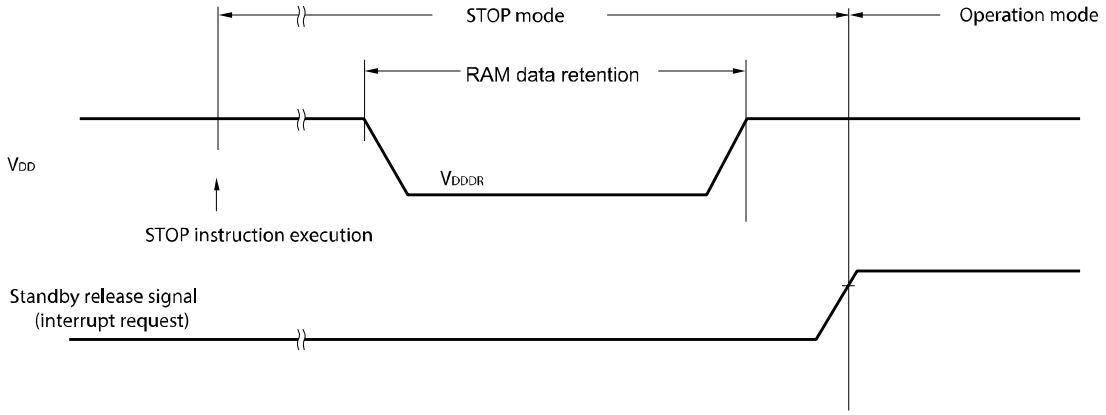

35.9 Flash Memory Programming Characteristics

(T_A = -40 to +125°C, 2.7 V ≤ EV_{DD0} = EV_{DD1} = V_{DD} ≤ 5.5 V, V_{SS} = EV_{SS0} = EV_{SS1} = 0 V)

Parameter	Symbol	Conditions	MIN.	TYP.	MAX.	Unit
System clock frequency	f_{CLK}		1		24	MHz
<R> Number of code flash rewrites Notes 1, 2, 3	C_{erwr}	Retained for 20 years T_A = +85°C Note 4	1,000			Times
<R> Number of data flash rewrites Notes 1, 2, 3		Retained for 20 years T_A = +85°C Note 4	10,000			
<R>		Retained for 5 years T_A = +85°C Note 4	100,000			
Erase time	T_{erasa}	Block erase	5			ms
Write time	T_{wrwa}	1 word write	10			μs

<R> **Notes 1.** 1 erase + 1 write after the erase is regarded as 1 rewrite. The starting point of the retaining years are after the erase.

2. When using flash memory programmer and Renesas Electronics self programming library

3. These are the characteristics of the flash memory and the results obtained from reliability testing by Renesas Electronics Corporation.

4. The specified data retention time is given under the condition that the average temperature (T_A) is 85°C or below.

CHAPTER 36 ELECTRICAL SPECIFICATIONS (GRADE Y)

Cautions 1. RL78/F13 and RL78/F14 have an on-chip debug function, which is provided for development and evaluation. Do not use the on-chip debug function in products designated for mass production, because the guaranteed number of rewritable times of the flash memory may be exceeded when this function is used, and product reliability therefore cannot be guaranteed. Renesas Electronics is not liable for problems occurring when the on-chip debug function is used.

2. With products not provided with an EV_{DD0}, EV_{DD1}, EV_{SS0}, or EV_{SS1} pin, replace EV_{DD0} and EV_{DD1} with V_{DD}, or replace EV_{SS0} and EV_{SS1} with V_{SS}.

3. The pins mounted depending on the product. For details, refer to 1.5 Pin Configurations and 2.1 Pin Function List.

4. The products are classified into the following five groups according to the product type, pin count, and code flash memory size. In this chapter, the products are referred to by group names depending on the content. In this case, refer to the following classification.

Group A: RL78/F13 (LIN incorporated) products with 20, 30, 32, 48, or 64 pins and 16 Kbytes to 64 Kbytes of code flash memory

Group B: RL78/F13 (LIN incorporated) products with 48 or 64 pins and 96 Kbytes to 128 Kbytes of code flash memory or with 80 pins and 64 Kbytes to 128 Kbytes of code flash memory

Group C: RL78/F13 (CAN and LIN incorporated) products with 30, 32, 48, 64, or 80 pins and 32 Kbytes to 128 Kbytes of code flash memory

Group D: RL78/F14 products with 30, 32, 48, 64, or 80 pins and 48 Kbytes to 96 Kbytes of code flash memory

Group E: RL78/F14 products with 48, 64, or 80 pins and 128 Kbytes to 256 Kbytes of code flash memory or with 100 pins and 64 Kbytes to 256 Kbytes of code flash memory

36.1 Absolute Maximum Ratings

(1/2)

Parameter	Symbol	Conditions	Ratings	Unit
Supply voltage	V_{DD}		-0.5 to +6.5	V
	EV_{DD0}, EV_{DD1}	$EV_{DD0} = EV_{DD1}$	-0.5 to +6.5	V
	V_{SS}		-0.5 to +0.3	V
	EV_{SS0}, EV_{SS1}	$EV_{SS0} = EV_{SS1}$	-0.5 to +0.3	V
REGC pin input voltage	V_{IREGC}	REGC	-0.3 to +2.8 and -0.3 to V_{DD}+0.3[Note 1]	V
Input voltage	V_{I1}	P00 to P03, P10 to P17, P30 to P32, P40 to P47, P50 to P57, P60 to P67, P70 to P77, P92 to P97[Note 4], P106, P107, P120, P125 to P127, P140, P150 to P157	-0.3 to EV_{DD0}+0.3 and -0.3 to V_{DD}+0.3[Note 2]	V
	V_{I2}	P33, P34, P80 to P87, P90 to P97[Note 4], P100 to P105, P121 to P124, P137, $\overline{RESET}$	-0.3 to V_{DD}+0.3[Note 2]	V
Output voltage	V_{O1}	P00 to P03, P10 to P17, P30 to P32, P40 to P47, P50 to P57, P60 to P67, P70 to P77, P92 to P97[Note 4], P106, P107, P120, P125 to P127, P130, P140, P150 to P157	-0.3 to EV_{DD0}+0.3 and -0.3 to V_{DD}+0.3[Note 2]	V
	V_{O2}	P33, P34, P80 to P87, P90 to P97[Note 4], P100 to P105	-0.3 to V_{DD}+0.3	V
Analog input voltage	V_{AI1}	ANI24 to ANI30	-0.3 to EV_{DD0}+0.3 and -0.3 to $AV_{REF(+)}$+0.3[Notes 2, 3]	V
	V_{AI2}	ANI0 to ANI23	-0.3 to V_{DD}+0.3 and -0.3 to $AV_{REF(+)}$+0.3[Notes 2, 3]	V

Notes 1. Connect the REGC pin to V_{SS} via a capacitor (0.47 to 1 μF). This value regulates the absolute maximum rating of the REGC pin. Do not use this pin with voltage applied to it.

2. Must be 6.5 V or lower.

3. For pins to be used in A/D conversion, the voltage should not exceed the value $AV_{REF(+)}$ + 0.3.

4. For pin I/O buffer power supplies, refer to **Table 4-1 Pin I/O Buffer Power Supplies**.

Caution **Product quality may suffer if the absolute maximum rating is exceeded even momentarily for any parameter. That is, the absolute maximum ratings are rated values at which the product is on the verge of suffering physical damage, and therefore the product must be used under conditions that ensure that the absolute maximum ratings are not exceeded.**

Remark Unless specified otherwise, the characteristics of alternate-function pins are the same as those of the port pins.

(2/2)

Parameter	Symbol	Conditions		Ratings	Unit
Output current, high	I_{OH1}	Per pin	P00 to P03, P10 to P17, P30 to P32, P40 to P47, P50 to P57, P60 to P67, P70 to P77, P92 to P97[Note 1], P106, P107, P120, P125 to P127, P130, P140, P150 to P157	-40	mA
		Total of all pins -170 mA	P01, P02, P40 to P47, P92 to P97[Note 1], P120, P125 to P127, P150 to P153	-70	mA
			P00, P03, P10 to P17, P30 to P32, P50 to P57, P60 to P67, P70 to P77, P106, P107, P130, P140, P154 to P157	-100	mA
	I_{OH2}	Per pin	P33, P34, P80 to P87, P90 to P97[Note 1], P100 to P105	-0.5	mA
		Total of all pins		-2	mA
Output current, low	I_{OL1}	Per pin	P00 to P03, P10 to P17, P30 to P32, P40 to P47, P50 to P57, P60 to P67, P70 to P77, P92 to P97[Note 1], P106, P107, P120, P125 to P127, P130, P140, P150 to P157	40	mA
		Total of all pins 170 mA	P01, P02, P40 to P47, P92 to P97[Note 1], P120, P125 to P127, P150 to P153	70	mA
			P00, P03, P10 to P17, P30 to P32, P50 to P57, P60 to P67, P70 to P77, P106, P107, P130, P140, P154 to P157	100	mA
	I_{OL2}	Per pin	P33, P34, P80 to P87, P90 to P97[Note 1], P100 to P105	1	mA
		Total of all pins		5	mA
Operating ambient temperature	T_A	In normal operation mode		-40 to +150	°C
		In flash memory programming mode			
Storage temperature	T_{stg}			-65 to +150	°C

Note 1. For pin I/O buffer power supplies, refer to **Table 4-1 Pin I/O Buffer Power Supplies**.

Caution Product quality may suffer if the absolute maximum rating is exceeded even momentarily for any parameter. That is, the absolute maximum ratings are rated values at which the product is on the verge of suffering physical damage, and therefore the product must be used under conditions that ensure that the absolute maximum ratings are not exceeded.

Remark Unless specified otherwise, the characteristics of alternate-function pins are the same as those of the port pins.

36.2 Oscillator Characteristics

36.2.1 Main System Clock Oscillator Characteristics

(T_A = -40 to +150°C, 2.7 V ≤ EV_{DD0} = EV_{DD1} = V_{DD} ≤ 5.5 V, V_{SS} = EV_{SS0} = EV_{SS1} = 0 V)

Resonator	Recommended Circuit	Parameter	Conditions	MIN.	TYP.	MAX.	Unit
Ceramic resonator/ Crystal resonator	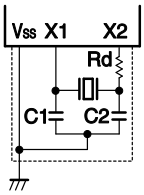	X1 clock oscillation frequency (fx)	2.7 V ≤ V_{DD} ≤ 5.5 V	1.0		20.0	MHz

Cautions 1. When using the X1 oscillator, wire as follows in the area enclosed by the broken lines in the above figures to avoid an adverse effect from wiring capacitance.

- **Keep the wiring length as short as possible.**
- **Do not cross the wiring with the other signal lines.**
- **Do not route the wiring near a signal line through which a high fluctuating current flows.**
- **Always make the ground point of the oscillator capacitor the same potential as V_{SS}.**
- **Do not ground the capacitor to a ground pattern through which a high current flows.**
- **Do not fetch signals from the oscillator.**

2. Customers are requested to consult the resonator manufacturer to select an appropriate resonator and to determine the proper oscillation constant. Customers are also requested to adequately evaluate the oscillation on their system. Determine the X1 clock oscillation stabilization time using the oscillation stabilization time of the oscillation stabilization time counter status register (OSTC) and the oscillation stabilization time select register (OSTS) after sufficiently evaluating the oscillation stabilization time with the resonator to be used.

36.2.2 On-chip Oscillator Characteristics

(T_A = -40 to +150°C, 2.7 V ≤ EV_{DD0} = EV_{DD1} = V_{DD} ≤ 5.5 V, V_{SS} = EV_{SS0} = EV_{SS1} = 0 V)

Oscillators	Symbol	Conditions	MIN.	TYP.	MAX.	Unit
High-speed on-chip oscillator clock frequency[Note]	f_{IH}		1		48	MHz
High-speed on-chip oscillator clock frequency accuracy	-		-5		+5	%
Low-speed on-chip oscillator clock frequency	f_{IL}, f_{WDT}			15		kHz
Low-speed on-chip oscillator clock frequency accuracy	-		-15		+15	%

Note High-speed on-chip oscillator frequency is selected with bits 0 to 4 of the option byte (000C2H/020C2H) and bits 0 to 2 of the HOCODIV register.

36.2.3 Subsystem Clock Oscillator Characteristics

Do not use the XT1 oscillator.

36.2.4 PLL Circuit Characteristics

(T_A = -40 to +150°C, 2.7 V ≤ EV_{DD0} = EV_{DD1} = V_{DD} ≤ 5.5 V, V_{SS} = EV_{SS0} = EV_{SS1} = 0 V)

Resonator	Symbol	Conditions		MIN.	TYP.	MAX.	Unit
PLL input enable clock frequency[Note 1]	f_{PLLI}	PLLMUL = 0	PLLDIV0 = 0	3.92	4.0	4.08	MHz
			PLLDIV0 = 1	7.84	8.0	8.16	MHz
		PLLMUL = 1	PLLDIV0 = 0	3.92	4.0	4.08	MHz
			PLLDIV0 = 1	7.84	8.0	8.16	MHz
PLL output frequency (center value)	f_{PLL}	PLLMUL = 0	PLLDIV0 = 0	f_{PLLI} × 12/2			MHz
			PLLDIV0 = 1	f_{PLLI} × 12/4			MHz
		PLLMUL = 1 [Note 4]	PLLDIV0 = 0 [Note 4]	f_{PLLI} × 16/2			MHz
			PLLDIV0 = 1	f_{PLLI} × 16/4			MHz
Long-term jitter[Notes 2, 3]	t_{LJ}	f_{PLL} = 24 MHz (480 counts)		-2		+2	ns
		f_{PLL} = 32 MHz (640 counts)		-2		+2	ns
		f_{PLL} = 48 MHz (960 counts)		-2		+2	ns

Notes 1. If the high-speed on-chip oscillator clock is to be selected as the PLL input clock, the minimum and maximum values will reflect the range of accuracy of the oscillation frequency by the high-speed on-chip oscillator clock.

2. Guaranteed by design, but not tested before shipment.

3. Indicates 20 μs.

4. Setting of PLLMUL = 1 and PLLDIV0 = 0 is prohibited when f_{PLLI} > 6 MHz.

36.3 DC Characteristics

36.3.1 Pin Characteristics

For the relationship between the port pins shown in the following tables and the products, refer to **CHAPTER 4 PORT FUNCTIONS**.

<R> **(T_A = -40 to +150°C, 2.7 V ≤ EV_{DD0} = EV_{DD1} = V_{DD} ≤ 5.5 V, V_{SS} = EV_{SS0} = EV_{SS1} = 0 V) (1/6)**

Items	Symbol	Conditions		MIN.	TYP.	MAX.	Unit
Output current, high[Note 1]	I_{OH1}	Per pin for P00 to P03, P10 to P17, P30 to P32, P40 to P47, P50 to P57, P60 to P67, P70 to P77, P92 to P97[Note 3], P106, P107, P120, P125 to P127, P130, P140, P150 to P157	4.0 V ≤ EV_{DD0} ≤ 5.5 V			-5.0	mA
			2.7 V ≤ EV_{DD0} < 4.0 V			-3.0	mA
<R>		Per pin for P10, P12, P14, P30,P120,P140 (special slew rate)	4.0 V ≤ EV_{DD0} ≤ 5.5 V			-0.6	mA
			2.7 V ≤ EV_{DD0} < 4.0 V			-0.2	mA
		Total of P01, P02, P40 to P47, P92 to P97[Note 3], P120, P125 to P127, P150 to P153 (for duty factors ≤ 70%[Note 2])	4.0 V ≤ EV_{DD0} ≤ 5.5 V			-20.0	mA
			2.7 V ≤ EV_{DD0} < 4.0 V			-10.0	mA
		Total of P00, P03, P10 to P17, P30 to P32, P50 to P57, P60 to P67, P70 to P77, P106, P107, P130, P140, P154 to P157 (for duty factors ≤ 70%[Note 2])	4.0 V ≤ EV_{DD0} ≤ 5.5 V			-30.0	mA
			2.7 V ≤ EV_{DD0} < 4.0 V			-19.0	mA
		Total of all pins (for duty factors ≤ 70%[Note 2])	4.0 V ≤ EV_{DD0} ≤ 5.5 V			-32.0	mA
			2.7 V ≤ EV_{DD0} < 4.0 V			-29.0	mA
	I_{OH2}	Per pin for P33, P34, P80 to P87, P90 to P97[Note 3], P100 to P105	2.7 V ≤ V_{DD} ≤ 5.5 V			-0.1	mA
		Total of all pins (for duty factors ≤ 70%[Note 2])	2.7 V ≤ V_{DD} ≤ 5.5 V			-2.0	mA

Notes 1. Value of current at which the device operation is guaranteed even if the current flows from pins EV_{DD0}, EV_{DD1} and V_{DD} to an output pin.

2. These output current values are obtained under the condition that the duty factor is no greater than 70%.

The output current values when the duty factor is changed to a value greater than 70% can be calculated from the following expression (when the duty factor is changed to n%).

- Total output current of pins (I_{OH} × 0.7)/(n × 0.01)

<Example> Where n = 80% and I_{OH} = -10.0 mA

Total output current of pins = (-10.0 × 0.7)/(80 × 0.01) ≈ -8.7 mA

However, the current that is allowed to flow into one pin does not vary depending on the duty factor. A current higher than the absolute maximum rating must not flow into one pin.

3. For pin I/O buffer power supplies, refer to **Table 4-1 Pin I/O Buffer Power Supplies**.

Caution **P10 to P17, P60 to P63, P70 to P72, and P120 do not output high level in N-ch open-drain mode.**

<R> **P10 to P12 and P70 to P72 of the Group A products do not support N-ch open-drain mode.**

Remark Unless specified otherwise, the characteristics of alternate-function pins are the same as those of the port pins.

<R> **(T_A = -40 to +150°C, 2.7 V ≤ EV_{DD0} = EV_{DD1} = V_{DD} ≤ 5.5 V, V_{SS} = EV_{SS0} = EV_{SS1} = 0 V) (2/6)**

Items	Symbol	Conditions		MIN.	TYP.	MAX.	Unit
Output current, low[Note 1]	I_{OL1}	Per pin for P00 to P03, P10 to P17, P30 to P32, P40 to P47, P50 to P57, P60 to P67, P70 to P77, P92 to P97[Note 3], P106, P107, P120, P125 to P127, P130, P140, P150 to P157	4.0 V ≤ EV_{DD0} ≤ 5.5 V			8.5	mA
			2.7 V ≤ EV_{DD0} < 4.0 V			4.0	mA
		Per pin for P10, P12, P14, P30, P120, P140 (special slew rate)	4.0 V ≤ EV_{DD0} ≤ 5.5 V			0.59	mA
			2.7 V ≤ EV_{DD0} < 4.0 V			0.07	mA
		Total of P01, P02, P40 to P47, P92 to P97[Note 3], P120, P125 to P127, P150 to P153 (for duty factors ≤ 70%[Note 2])	4.0 V ≤ EV_{DD0} ≤ 5.5 V			20.0	mA
			2.7 V ≤ EV_{DD0} < 4.0 V			15.0	mA
		Total of P00, P03, P10 to P17, P30 to P32, P50 to P57, P60 to P67, P70 to P77, P106, P107, P130, P140, P154 to P157 (for duty factors ≤ 70%[Note 2])	4.0 V ≤ EV_{DD0} ≤ 5.5 V			35.0	mA
			2.7 V ≤ EV_{DD0} < 4.0 V			30.0	mA
		Total of all pins (for duty factors ≤ 70%[Note 2])	4.0 V ≤ EV_{DD0} ≤ 5.5 V			55.0	mA
			2.7 V ≤ EV_{DD0} < 4.0 V			45.0	mA
	I_{OL2}	Per pin for P33, P34, P80 to P87, P90 to P97[Note 3], P100 to P105	2.7 V ≤ V_{DD} ≤ 5.5 V			0.4	mA
		Total of all pins (for duty factors ≤ 70%[Note 2])	2.7 V ≤ V_{DD} ≤ 5.5 V			5.0	mA

Notes 1. Value of current at which the device operation is guaranteed even if the current flows to the EV_{SS0}, EV_{SS1} and V_{SS} pins from an output pin.

2. These output current values are obtained under the condition that the duty factor is no greater than 70%. The output current values when the duty factor is changed to a value greater than 70% can be calculated from the following expression (when the duty factor is changed to n%).

- Total output current of pins $(I_{OL} \times 0.7)/(n \times 0.01)$

<Example> Where n = 80% and I_{OL} = 10.0 mA

Total output current of pins = $(10.0 \times 0.7)/(80 \times 0.01) \approx 8.7$ mA

However, the current that is allowed to flow into one pin does not vary depending on the duty factor. A current higher than the absolute maximum rating must not flow into one pin.

3. For pin I/O buffer power supplies, refer to **Table 4-1 Pin I/O Buffer Power Supplies**.

Remark Unless specified otherwise, the characteristics of alternate-function pins are the same as those of the port pins.

<R> **(T_A = -40 to +150°C, 2.7 V ≤ EV_{DD0} = EV_{DD1} = V_{DD} ≤ 5.5 V, V_{SS} = EV_{SS0} = EV_{SS1} = 0 V) (3/6)**

Items	Symbol	Conditions		MIN.	TYP.	MAX.	Unit
Input voltage, high	V_{IH1}	P00 to P03, P10 to P17, P30 to P32, P40 to P47, P50 to P57, P60 to P67, P70 to P77, P106, P107, P120, P125 to P127, P140, P150 to P157 (Schmitt 1 mode)	4.0 V ≤ EV_{DD0} ≤ 5.5 V	0.65 EV_{DD0}		EV_{DD0} Note 1	V
			2.7 V ≤ EV_{DD0} < 4.0 V	0.7 EV_{DD0}		EV_{DD0} Note 1	V
	V_{IH2}	P10, P11, P13, P14, P16, P17, P30, P43, P50, P52 to P54, P60 to P63, P70, P71, P73, P75 to P77, P107, P125, P150, P152, P153 (Schmitt 3 mode)	4.0 V ≤ EV_{DD0} ≤ 5.5 V	0.8 EV_{DD0}		EV_{DD0} Note 1	V
			2.7 V ≤ EV_{DD0} < 4.0 V	0.85 EV_{DD0}		EV_{DD0} Note 1	V
	V_{IH3}	P10, P11, P13, P14, P16, P17, P30, P54, P62, P63, P70, P71, P73, P125 (TTL mode)	4.0 V ≤ EV_{DD0} ≤ 5.5 V	2.2		EV_{DD0} Note 1	V
			2.7 V ≤ EV_{DD0} < 4.0 V	2.0		EV_{DD0} Note 1	V
	V_{IH4} Note 2	P33, P34, P80 to P87, P90 to P97, P100 to P105, P137 (fixed to Schmitt 3 mode)	4.0 V ≤ V_{DD} ≤ 5.5 V	0.8 V_{DD}		V_{DD}	V
			2.7 V ≤ V_{DD} < 4.0 V	0.85 V_{DD}		V_{DD}	V
	V_{IH5}	$\overline{\text{RESET}}$ (fixed to Schmitt 1 mode)	4.0 V ≤ V_{DD} ≤ 5.5 V	0.65 V_{DD}		V_{DD}	V
			2.7 V ≤ V_{DD} < 4.0 V	0.7 V_{DD}		V_{DD}	V
	V_{IH6}	P121 to P124, EXCLK, EXCLKS (fixed to Schmitt 2 mode)	4.0 V ≤ V_{DD} ≤ 5.5 V	0.8 V_{DD}		V_{DD}	V
			2.7 V ≤ V_{DD} < 4.0 V	0.8 V_{DD}		V_{DD}	V

Notes 1. The maximum value of V_{IH} of the pins P10 to P17, P60 to P63, P70 to P72, and P120 is EV_{DD0}, even in N-ch open-drain mode.

2. P92 to P96 of the Group A products are fixed to Schmitt 1 mode.
P96 and P97 of the Group B, C, and D products are fixed to Schmitt 1 mode.

Remark Unless specified otherwise, the characteristics of alternate-function pins are the same as those of the port pins.

<R> **(T_A = -40 to +150°C, 2.7 V ≤ EV_{DD0} = EV_{DD1} = V_{DD} ≤ 5.5 V, V_{SS} = EV_{SS0} = EV_{SS1} = 0 V) (4/6)**

Items	Symbol	Conditions		MIN.	TYP.	MAX.	Unit
Input voltage, low	V_{IL1}	P00 to P03, P10 to P17, P30 to P32, P40 to P47, P50 to P57, P60 to P67, P70 to P77, P106, P107, P120, P125 to P127, P140, P150 to P157 (Schmitt 1 mode)	4.0 V ≤ EV_{DD0} ≤ 5.5 V	0		0.35 EV_{DD0}	V
			2.7 V ≤ EV_{DD0} < 4.0 V	0		0.3 EV_{DD0}	V
	V_{IL2}	P10, P11, P13, P14, P16, P17, P30, P43, P50, P52 to P54, P60 to P63, P70, P71, P73, P75 to P77, P107, P125, P150, P152, P153 (Schmitt 3 mode)	4.0 V ≤ EV_{DD0} ≤ 5.5 V	0		0.5 EV_{DD0}	V
			2.7 V ≤ EV_{DD0} < 4.0 V	0		0.4 EV_{DD0}	V
	V_{IL3}	P10, P11, P13, P14, P16, P17, P30, P54, P62, P63, P70, P71, P73, P125 (TTL mode)	4.0 V ≤ EV_{DD0} ≤ 5.5 V	0		0.8	V
			2.7 V ≤ EV_{DD0} < 4.0 V	0		0.5	V
	V_{IL4} Note	P33, P34, P80 to P87, P90 to P97, P100 to P105, P137 (fixed to Schmitt 3 mode)	4.0 V ≤ V_{DD} ≤ 5.5 V	0		0.5 V_{DD}	V
			2.7 V ≤ V_{DD} < 4.0 V	0		0.4 V_{DD}	V
	V_{IL5}	$\overline{\text{RESET}}$ (fixed to Schmitt 1 mode)	4.0 V ≤ V_{DD} ≤ 5.5 V	0		0.35 V_{DD}	V
			2.7 V ≤ V_{DD} < 4.0 V	0		0.3 V_{DD}	V
	V_{IL6}	P121 to P124, EXCLK, EXCLKS (fixed to Schmitt 2 mode)	4.0 V ≤ V_{DD} ≤ 5.5 V	0		0.2 V_{DD}	V
			2.7 V ≤ V_{DD} < 4.0 V	0		0.2 V_{DD}	V

Note P92 to P96 of the Group A products are fixed to Schmitt 1 mode.
P96 and P97 of the Group B, C, and D products are fixed to Schmitt 1 mode.

Remark Unless specified otherwise, the characteristics of alternate-function pins are the same as those of the port pins.

<R> **(T_A = -40 to +150°C, 2.7 V ≤ EV_{DD0} = EV_{DD1} = V_{DD} ≤ 5.5 V, V_{SS} = EV_{SS0} = EV_{SS1} = 0 V) (5/6)**

Items	Symbol	Conditions		MIN.	TYP.	MAX.	Unit
Output voltage, high	V_{OH1}	P00 to P03, P10 to P17, P30 to P32, P40 to P47, P50 to P57, P60 to P67, P70 to P77, P92 to P97[Note], P106, P107, P120, P125 to P127, P130, P140, P150 to P157 (normal slew rate)	4.0 V ≤ EV_{DD0} ≤ 5.5 V, I_{OH1} = -5.0 mA	EV_{DD0}-0.9			V
			2.7 V ≤ EV_{DD0} ≤ 5.5 V, I_{OH1} = -3.0 mA	EV_{DD0}-0.7			V
			2.7 V ≤ EV_{DD0} ≤ 5.5 V, I_{OH1} = -1.0 mA	EV_{DD0}-0.5			V
	V_{OH2}	P33, P34, P80 to P87, P90 to P97[Note], P100 to P105	2.7 V ≤ V_{DD} ≤ 5.5 V I_{OH2} = -100 μA	V_{DD}-0.5			V
	V_{OH3}	P10, P12, P14, P30, P120, P140 (special slew rate)	4.0 V ≤ EV_{DD0} ≤ 5.5 V, I_{OH3} = -0.6 mA	EV_{DD0}-0.8			V
			2.7 V ≤ EV_{DD0} ≤ 5.5 V, I_{OH3} = -0.2 mA	EV_{DD0}-0.5			V
Output voltage, low	V_{OL1}	P00 to P03, P10 to P17, P30 to P32, P40 to P47, P50 to P57, P60 to P67, P70 to P77, P92 to P97[Note], P106, P107, P120, P125 to P127, P130, P140, P150 to P157 (normal slew rate)	4.0 V ≤ EV_{DD0} ≤ 5.5 V, I_{OL1} = 8.5 mA			0.7	V
			4.0 V ≤ EV_{DD0} ≤ 5.5 V, I_{OL1} = 4.0 mA			0.4	V
			2.7 V ≤ EV_{DD0} ≤ 5.5 V, I_{OL1} = 4.0 mA			0.7	V
			2.7 V ≤ EV_{DD0} ≤ 5.5 V, I_{OL1} = 1.5 mA			0.4	V
	V_{OL2}	P33, P34, P80 to P87, P90 to P97[Note], P100 to P105	2.7 V ≤ V_{DD} ≤ 5.5 V I_{OL2} = 400 μA			0.4	V
	V_{OL3}	P10, P12, P14, P30, P120, P140 (special slew rate)	4.0 V ≤ EV_{DD0} ≤ 5.5 V, I_{OL3} = 0.6 mA			0.8	V
			2.7 V ≤ EV_{DD0} ≤ 5.5 V, I_{OL3} = 0.07 mA			0.5	V

Note For pin I/O buffer power supplies, refer to **Table 4-1 Pin I/O Buffer Power Supplies**.

Caution P10 to P17, P60 to P63, P70 to P72, and P120 do not output high level in N-ch open-drain mode.

Remark Unless specified otherwise, the characteristics of alternate-function pins are the same as those of the port pins.

<R> **(T_A = -40 to +150°C, 2.7 V ≤ EV_{DD0} = EV_{DD1} = V_{DD} ≤ 5.5 V, V_{SS} = EV_{SS0} = EV_{SS1} = 0 V) (6/6)**

Items	Symbol	Conditions			MIN.	TYP.	MAX.	Unit
Input leakage current, high	I_{LIH1}	P00 to P03, P10 to P17, P30 to P32, P40 to P47, P50 to P57, P60 to P67, P70 to P77, P92 to P97[Note], P106, P107, P120, P125 to P127, P140, P150 to P157	V_I = EV_{DD0}				1	μA
	I_{LIH2}	P33, P34, P80 to P87, P90 to P97[Note], P100 to P105, P137, $\overline{RESET}$	V_I = V_{DD}				1	μA
	I_{LIH3}	P121 to P124 (X1, X2, EXCLK, EXCLKS)	V_I = V_{DD}	In input port or external clock input			1	μA
				In resonator connection			10	μA
Input leakage current, low	I_{LIL1}	P00 to P03, P10 to P17, P30 to P32, P40 to P47, P50 to P57, P60 to P67, P70 to P77, P92 to P97[Note], P106, P107, P120, P125 to P127, P140, P150 to P157	V_I = EV_{SS0}				-1	μA
	I_{LIL2}	P33, P34, P80 to P87, P90 to P97[Note], P100 to P105, P137, $\overline{RESET}$	V_I = V_{SS}				-1	μA
	I_{LIL3}	P121 to P124 (X1, X2, EXCLK, EXCLKS)	V_I = V_{SS}	In input port or external clock input			-1	μA
				In resonator connection			-10	μA
On-chip pull-up resistance	R_U	P00 to P03, P10 to P17, P30 to P32, P40 to P47, P50 to P57, P60 to P67, P70 to P77, P92 to P97, P100 to P107, P120, P125 to P127, P140, P150 to P157	V_I = EV_{SS0}, in input port		10	20	100	kΩ

Note For pin I/O buffer power supplies, refer to **Table 4-1 Pin I/O Buffer Power Supplies**.

Caution P10 to P17, P60 to P63, P70 to P72, and P120 do not output high level in N-ch open-drain mode.

Remark Unless specified otherwise, the characteristics of alternate-function pins are the same as those of the port pins.

36.3.2 Supply Current Characteristics

(T_A = -40 to +150°C, 2.7 V ≤ EV_{DD0} = EV_{DD1} = V_{DD} ≤ 5.5 V, V_{SS} = EV_{SS0} = EV_{SS1} = 0 V) (1/3)

Items	Symbol	Conditions					MIN.	TYP.	MAX.	Unit
Supply current[Note 1]	I_{DD1}	Operating mode	Normal operation [Note 2]	High-speed on-chip oscillator clock operation	f_{IH} = 48 MHz	f_{CLK} = 24 MHz [Notes 3, 4]		5.1	12.5	mA
					f_{IH} = 24 MHz	f_{CLK} = f_{IH} [Notes 3, 4]		4.8	11.5	mA
					f_{IH} = 1 MHz	f_{CLK} = f_{IH} [Notes 3, 4]		1.0	2.6	mA
				Resonator operation	f_{MX} = 20 MHz	f_{CLK} = f_{MX} [Notes 3, 5]		4.2	9.5	mA
					f_{MX} = 1 MHz	f_{CLK} = f_{MX} [Notes 3, 5]		0.9	2.6	mA
				Resonator operation (PLL operation) (PLL input clock = f_{MX})	f_{PLL} = 48 MHz, f_{MX} = 8 MHz	f_{CLK} = 24 MHz [Notes 3, 6]		5.0	12.5	mA
					f_{PLL} = 24 MHz, f_{MX} = 8 MHz	f_{CLK} = 24 MHz [Notes 3, 6]		4.9	11.5	mA
					f_{PLL} = 24 MHz, f_{MX} = 4 MHz	f_{CLK} = 24 MHz [Notes 3, 6]		4.7	11.5	mA
				Subsystem clock operation (f_{SUB} = f_{EXS})	f_{SUB} = 32.768 kHz	f_{CLK} = f_{SUB} [Note 7]				
						Groups A to D		6.0	170.0	μA
						Group E		6.0	270.0	μA
				Low-speed on-chip oscillator clock operation	f_{IL} = 15 kHz	f_{CLK} = f_{IL} [Note 8]				
						Groups A to D		3.0	160.0	μA
						Group E		3.0	260.0	μA

Notes 1. Total current flowing into V_{DD} and EV_{DD0}, including the input leakage current flowing when the level of the input pin is fixed to V_{DD}, EV_{DD0}, V_{SS}, or EV_{SS0}. However, not including the current flowing into the I/O buffer and on-chip pull-up/pull-down resistors.

2. Current drawn when all the CPU instructions are executed.

3. The values below the MAX. column include the peripheral operation current (except for background operation (BGO)). However, the LVD circuit, A/D converter, D/A converter, and comparator are stopped.

4. When high-speed system clock, subsystem clock, PLL clock, and low-speed on-chip oscillator clock are stopped.

5. When subsystem clock, PLL clock, high-speed on-chip oscillator clock, and low-speed on-chip oscillator clock are stopped.

6. When subsystem clock, high-speed on-chip oscillator clock, and low-speed on-chip oscillator clock are stopped.

7. When high-speed system clock, PLL clock, high-speed on-chip oscillator clock, and low-speed on-chip oscillator are stopped.

8. When high-speed system clock, subsystem clock, PLL clock, and high-speed on-chip oscillator clock are stopped.

Remarks 1. f_{MX}: High-speed system clock frequency

2. f_{SUB}: Subsystem clock frequency

3. f_{EXS}: External subsystem clock frequency

4. f_{PLL}: PLL clock frequency

5. f_{IH}: High-speed on-chip oscillator clock frequency

6. f_{IL}: Low-speed on-chip oscillator clock frequency

7. f_{CLK}: CPU/peripheral hardware clock frequency

<R> **(T_A = -40 to +150°C, 2.7 V ≤ EV_{DD0} = EV_{DD1} = V_{DD} ≤ 5.5 V, V_{SS} = EV_{SS0} = EV_{SS1} = 0 V) (2/3)**

Items	Symbol	Conditions					MIN.	TYP.	MAX.	Unit
Supply current[Notes1, 3]	I_{DD2}	HALT mode [Note 2]		High-speed on-chip oscillator clock operation	f_{IH} = 48 MHz	f_{CLK} = 24 MHz [Note 5]		0.9	8.5	mA
					f_{IH} = 24 MHz	f_{CLK} = f_{IH} [Note 5]		0.7	7.5	mA
					f_{IH} = 1 MHz	f_{CLK} = f_{IH} [Note 5]		0.3	1.6	mA
				Resonator operation	f_{MX} = 20 MHz	f_{CLK} = f_{MX} [Note 6]		0.6	6.5	mA
					f_{MX} = 1 MHz	f_{CLK} = f_{MX} [Note 6]		0.2	1.6	mA
				Resonator operation (PLL operation) (PLL input clock = f_{MX})	f_{PLL} = 48 MHz, f_{MX} = 8 MHz	f_{CLK} = 24 MHz [Note 7]		0.9	8.5	mA
					f_{PLL} = 24 MHz, f_{MX} = 8 MHz	f_{CLK} = 24 MHz [Note 7]		0.8	7.5	mA
					f_{PLL} = 24 MHz, f_{MX} = 4 MHz	f_{CLK} = 24 MHz [Note 7]		0.6	7.5	mA
				Subsystem clock operation (f_{SUB} = f_{EXS})	f_{SUB} = 32.768 kHz	f_{CLK} = f_{SUB} [Note 8]				
					Groups A to D			0.7	165.0	μA
					Group E			0.7	265.0	
				Low-speed on-chip oscillator clock operation	f_{IL} = 15 kHz	f_{CLK} = f_{IL} [Note 9]				
					Groups A to D			0.7	155.0	μA
					Group E			0.7	255.0	
	I_{DD3}	STOP mode [Note 4]		T_A = +25°C	Groups A to D			0.5		μA
					Group E			0.5		
				T_A = +50°C	Groups A to D				2.5	
					Group E				4.5	
				T_A = +70°C	Groups A to D				4.5	
					Group E				8.0	
				T_A = +105°C	Groups A to D				30.0	
					Group E				50.0	
				T_A = +125°C	Groups A to D				60.0	
					Group E				100.0	
				T_A = +150°C	Groups A to D				150.0	
					Group E				250.0	

Notes 1. Total current flowing into V_{DD} and EV_{DD0}, including the input leakage current flowing when the level of the input pin is fixed to V_{DD}, EV_{DD0}, V_{SS}, or EV_{SS0}. However, not including the current flowing into the I/O buffer and on-chip pull-up/pull-down resistors.

2. When HALT mode is entered during fetch from the flash memory.

3. The values below the MAX. column include the peripheral operation current and STOP leakage current. However, the watchdog timer, LVD circuit, A/D converter, D/A converter, and comparator are stopped <R>

4. When high-speed system clock, subsystem clock, PLL clock, high-speed on-chip oscillator clock, and low-speed on-chip oscillator clock are stopped.

5. When high-speed system clock, subsystem clock, PLL clock, and low-speed on-chip oscillator clock are stopped.

6. When subsystem clock, PLL clock, high-speed on-chip oscillator clock, and low-speed on-chip oscillator clock are stopped.
7. When subsystem clock, high-speed on-chip oscillator clock, and low-speed on-chip oscillator clock are stopped.
8. When high-speed system clock, PLL clock, high-speed on-chip oscillator clock, and low-speed on-chip oscillator clock are stopped.
9. When high-speed system clock, subsystem clock, PLL clock, and high-speed on-chip oscillator clock are stopped.

Remarks
1. f_{MX}: High-speed system clock frequency
2. f_{SUB}: Subsystem clock frequency
3. f_{EXS}: External subsystem clock frequency
4. f_{PLL}: PLL clock frequency
5. f_{IH}: High-speed on-chip oscillator clock frequency
6. f_{IL}: Low-speed on-chip oscillator clock frequency
7. f_{CLK}: CPU/peripheral hardware clock frequency

(T_A = -40 to +150°C, 2.7 V ≤ EV_{DD0} = EV_{DD1} = V_{DD} ≤ 5.5 V, V_{SS} = EV_{SS0} = EV_{SS1} = 0 V) (3/3)

Items	Symbol	Conditions				MIN.	TYP.	MAX.	Unit
Supply current[Notes 1, 2]	I_{SNOZ}	SNOOZE mode	A/D comparator operation	During mode transition			1.0	1.3	mA
				During conversion	Low-voltage mode AV_{REFP} = V_{DD} = 5.0 V		2.1	2.6	mA
			DTC operation				4.5		mA

Notes 1. Total current flowing into V_{DD} and EV_{DD0}, including the input leakage current flowing when the level of the input pin is fixed to V_{DD}, EV_{DD0}, V_{SS}, or EV_{SS0}. However, not including the current flowing into the I/O buffer and on-chip pull-up/pull-down resistors.

2. The values below the MAX. column include the STOP leakage current.

(T_A = -40 to +150°C, 2.7 V ≤ EV_{DD0} = EV_{DD1} = V_{DD} ≤ 5.5 V, V_{SS} = EV_{SS0} = EV_{SS1} = 0 V)

Parameter	Symbol	Conditions		MIN.	TYP.	MAX.	Unit
Window watchdog timer operating current	I_{WDT} Notes 1, 2	f_{IL} = 15 kHz			0.22		μA
A/D converter operating current	I_{ADC} Note 3	When conversion at maximum speed	Normal mode, AV_{REFP} = V_{DD} = 5.0 V		1.3	1.7	mA
		When internal reference voltage is selected Note 5			75.0		μA
LVD operating current	I_{LVD} Note 4				0.08		μA
Temperature sensor operating current	I_{TMPS}				75.0		μA
D/A converter operating current	I_{DAC}	Per channel			0.8	1.5	mA
Comparator operating current	I_{CMP}				50.0		μA
BGO operating current	I_{BGO} Note 6				2.50	12.20	mA

Notes 1. When the high-speed on-chip oscillator clock and high-speed system clock are stopped.

<R> **2.** Current flowing only to the watchdog timer (including the operation current of the 15 kHz on-chip oscillator). The current value is the sum of I_{DD1}, I_{DD2}, or I_{DD3} and I_{WDT} when the watchdog timer operates in STOP mode.

3. Current flowing only to the A/D converter. The current value is the sum of I_{DD1} or I_{DD2} and I_{ADC} when the A/D converter operates in operation mode or HALT mode.

4. Current flowing only to the LVD circuit. The current value is the sum of I_{DD1}, I_{DD2}, or I_{DD3} and I_{LVD} when the LVD circuit operates in operation mode, HALT mode, or STOP mode.

5. Operating current that increases when the internal reference voltage is selected. This current flows even when conversion is stopped.

6. Current increased by the BGO operation. The current value is the sum of I_{DD1} or I_{DD2} and I_{BGO} when the BGO operates in operation mode or HALT mode.

36.4 AC Characteristics

36.4.1 Basic Operation

(T_A = -40 to +150°C, 2.7 V ≤ EV_{DD0} = EV_{DD1} = V_{DD} ≤ 5.5 V, V_{SS} = EV_{SS0} = EV_{SS1} = 0 V) (1/2)

Parameter	Symbol	Conditions		MIN.	TYP.	MAX.	Unit
Instruction cycle (minimum instruction execution time)	T_{CY}	High-speed on-chip oscillator clock operation		0.04166		1	μs
		High-speed system clock operation		0.05		1	μs
		PLL clock operation		0.04166		1	μs
		Subsystem clock operation		28.5	30.5	34.5	μs
		Low-speed on-chip oscillator clock operation			66.6		μs
		In self programming mode		0.04166		1	μs
CPU/peripheral hardware clock frequency	f_{CLK}			0.04166		66.6	μs
External system clock frequency	f_{EX}			1.0		20.0	MHz
	f_{EXS}			29		35	kHz
External system clock input high-level width, low-level width	t_{EXH}, t_{EXL}			24			ns
	t_{EXHS}, t_{EXLS}			13.7			μs
TI00 to TI07, TI10 to TI17 input high-level width, low-level width	t_{TIH}, t_{TIL}			$1/f_{MCK}+10$			ns
TO00 to TO07, TO10 to TO17 output frequency	f_{TO}	All TO pins, Normal slew rate, C = 30 pF	4.0 V ≤ EV_{DD0} ≤ 5.5 V			12	MHz
			2.7 V ≤ EV_{DD0} < 4.0 V			6	MHz
		TO01, TO06, TO07, TO11, TO13 only, Special slew rate, C = 30 pF				2	MHz
PCLBUZ0 output frequency	f_{PCL}	Normal slew rate C = 30 pF	4.0 V ≤ EV_{DD0} ≤ 5.5 V			12	MHz
			2.7 V ≤ EV_{DD0} < 4.0 V			6	MHz
		Special slew rate C = 30 pF				2	MHz
Timer RJ input cycle	t_C	TRJIO0		100			ns
Timer RJ input high-level width, low-level width	t_{WH}, t_{WL}	TRJIO0		40			ns
<R> Interrupt input high-level width, low-level width	t_{INTH}, t_{INTL}	INTP0 to INTP13 Note		1			μs
<R> KR0 to KR7 key interrupt input low-level width	t_{KR}			250			ns
$\overline{\text{RESET}}$ low-level width	t_{RSL}			10			μs

Note Pins $\overline{\text{RESET}}$, INTP0 to INTP3, INTP12, and INTP13 have noise filters for transient levels lasting less than 100 ns.

Caution **Excluding the error in oscillation frequency accuracy**.

Remark f_{MCK}: Timer array unit operation clock frequency

(T_A = -40 to +150°C, 2.7 V ≤ EV_{DD0} = EV_{DD1} = V_{DD} ≤ 5.5 V, V_{SS} = EV_{SS0} = EV_{SS1} = 0 V) (2/2)

<R>

Parameter	Symbol	Conditions		MIN.	TYP.	MAX.	Unit
Port output rise time, port output fall time	t_{RO}, t_{FO}	P00 to P03, P10 to P17, P30 to P32, P40 to P47, P50 to P57, P60 to P67, P70 to P77, P96, P97, P106, P107, P120, P125 to P127, P130, P140, P150 to P157 (normal slew rate) C = 30 pF	4.0 V ≤ EV_{DD0} ≤ 5.5 V			25	ns
			2.7 V ≤ EV_{DD0} < 4.0 V			55	ns
		P10, P12, P14, P30, P120, P140 (special slew rate) C = 30 pF	4.0 V ≤ EV_{DD0} ≤ 5.5 V		25 Note	60	ns
			2.7 V ≤ EV_{DD0} < 4.0 V			100	ns

Note T_A = +25°C, EV_{DD0} = 5.0 V

Caution Excluding the error in oscillation frequency accuracy.

Remark f_{MCK}: Timer array unit operation clock frequency

AC Timing Test Points

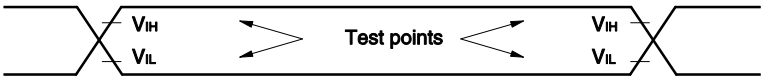

External System Clock Timing

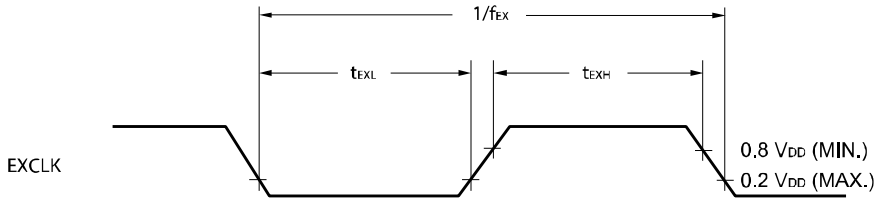

<R>

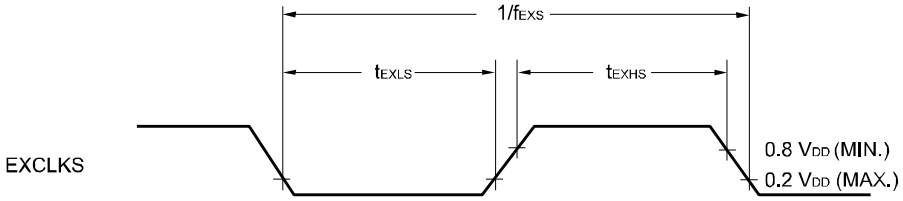

TI/TO Timing

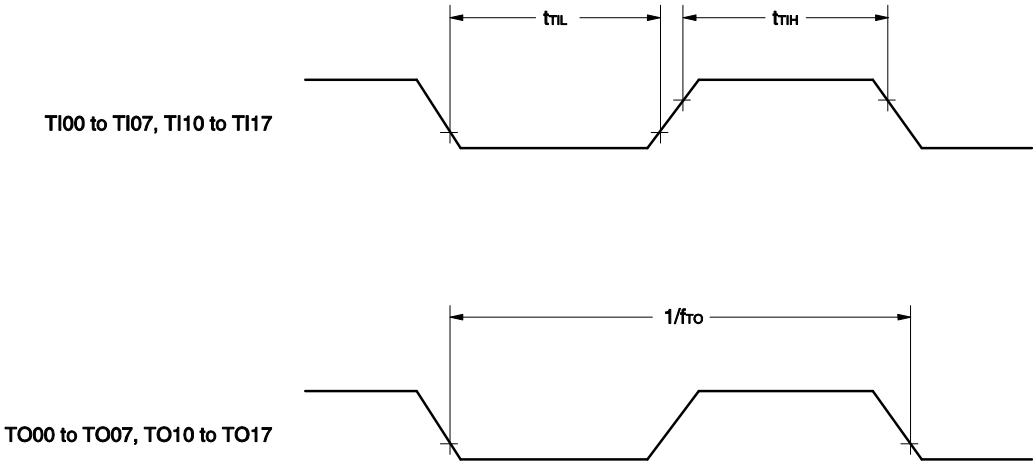

Interrupt Request Input Timing

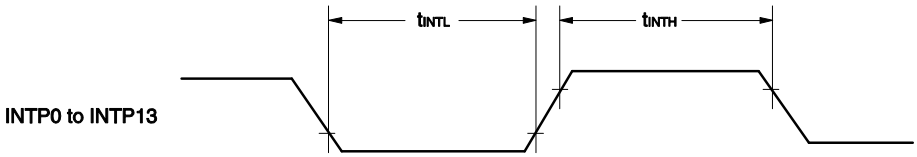

Key Interrupt Input Timing

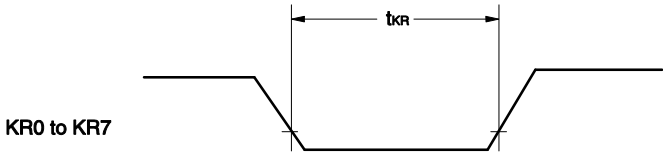

$\overline{\text{RESET}}$ Input Timing

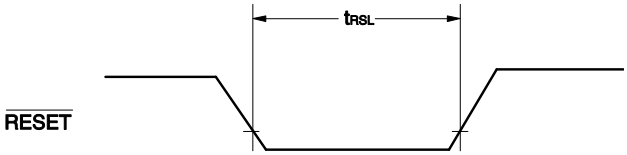

Output Rising and Falling Timing

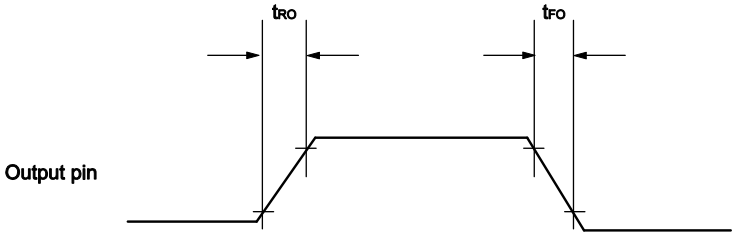

36.5 Peripheral Functions Characteristics

36.5.1 Serial Array Unit

(1) During communication at same potential (UART mode) (dedicated baud rate generator output)

(T_A = -40 to +150°C, 2.7 V ≤ EV_{DD0} = EV_{DD1} = V_{DD} ≤ 5.5 V, V_{SS} = EV_{SS0} = EV_{SS1} = 0 V)

Parameter	Symbol	Conditions		MIN.	TYP.	MAX.	Unit
Transfer rate	-					f_{MCK}/6	bps
		f_{CLK} = 24 MHz, f_{MCK} = f_{CLK}	Normal slew rate			4	Mbps
			Special slew rate			2	Mbps

UART mode connection diagram (during communication at same potential)

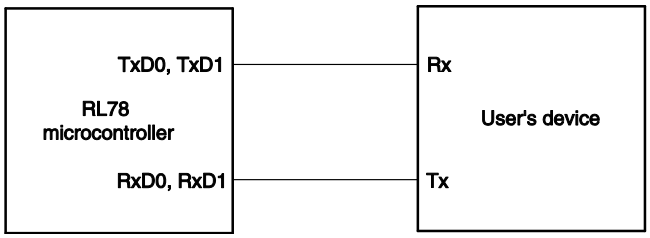

UART mode bit width (during communication at same potential) (reference)

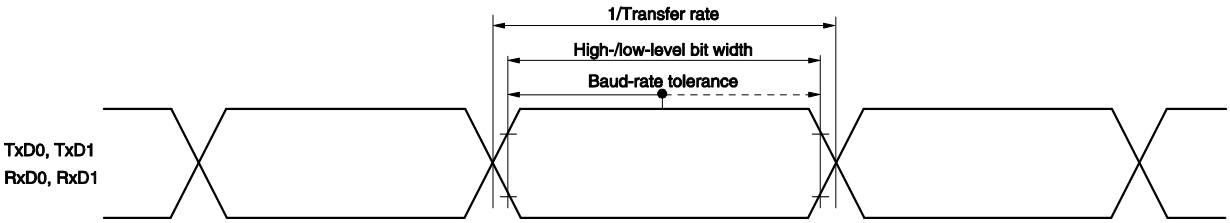

Caution Select the normal input buffer for the RxD0 pin and RxD1 pin and normal output mode for the TxD0 pin and TxD1 pin.

Remark f_{MCK}: Serial array unit operation clock frequency

(2) During communication at same potential (CSI mode) (master mode, $\overline{SCKp}$ … internal clock output, normal slew rate)

(T_A = -40 to +150°C, 2.7 V ≤ EV_{DD0} = EV_{DD1} = V_{DD} ≤ 5.5 V, V_{SS} = EV_{SS0} = EV_{SS1} = 0 V)

Parameter	Symbol	Conditions	MIN.	TYP.	MAX.	Unit
$\overline{SCKp}$ cycle time	t_{KCY1}		166.6 Note 5			ns
$\overline{SCKp}$ high-level width, low-level width	t_{KH1}, t_{KL1}	4.0 V ≤ EV_{DD0} ≤ 5.5 V	t_{KCY1}/2 – 12			ns
		2.7 V ≤ EV_{DD0} < 4.0 V	t_{KCY1}/2 – 18			ns
SIp setup time (to $\overline{SCKp}$↑) Note 1	t_{SIK1}	4.0 V ≤ EV_{DD0} ≤ 5.5 V	55			ns
		2.7 V ≤ EV_{DD0} < 4.0 V	66			ns
SIp hold time (from $\overline{SCKp}$↑) Note 2	t_{KSI1}		30			ns
Delay time from $\overline{SCKp}$↓ to SOp output Note 3	t_{KSO1}	C = 30 pF Note 4			40	ns

Notes 1. When DAPmn = 0 and CKPmn = 0, or DAPmn = 1 and CKPmn = 1. The SIp setup time becomes "to $\overline{SCKp}$↓" when DAPmn = 0 and CKPmn = 1 or DAPmn = 1 and CKPmn = 0.

2. When DAPmn = 0 and CKPmn = 0 or DAPmn = 1 and CKPmn = 1. The SIp hold time becomes "from $\overline{SCKp}$↓" when DAPmn = 0 and CKPmn = 1 or DAPmn = 1 and CKPmn = 0.

3. When DAPmn = 0 and CKPmn = 0, or DAPmn = 1 and CKPmn = 1. The delay time to SOp output becomes "from $\overline{SCKp}$↑" when DAPmn = 0 and CKPmn = 1, or DAPmn = 1 and CKPmn = 0.

4. C is the load capacitance of the $\overline{SCKp}$ and SOp output lines.

5. t_{KCY1} ≥ 4/f_{CLK} must also be satisfied.

Caution Select the normal input buffer for the SIp pin and normal output mode for the SOp pin and $\overline{SCKp}$ pin.

Remark p: CSIp (p = 00, 01, 10, 11), m: Unit m (m = 0, 1), n: Channel n (n = 0, 1)

(3) During communication at same potential (CSI mode) (master mode, $\overline{\text{SCKp}}$ … internal clock output, special slew rate)

(T_A = -40 to +150°C, 4.0 V ≤ EV_{DD0} = EV_{DD1} = V_{DD} ≤ 5.5 V, V_{SS} = EV_{SS0} = EV_{SS1} = 0 V)

Parameter	Symbol	Conditions	MIN.	TYP.	MAX.	Unit
$\overline{\text{SCKp}}$ cycle time	t_{KCY1}		500 Note 5			ns
$\overline{\text{SCKp}}$ high-level width, low-level width	t_{KH1}, t_{KL1}		t_{KCY1}/2 – 60			ns
SIp setup time (to $\overline{\text{SCKp}}$↑) Note 1	t_{SIK1}		120			ns
SIp hold time (from $\overline{\text{SCKp}}$↑) Note 2	t_{KSI1}		80			ns
Delay time from $\overline{\text{SCKp}}$↓ to SOp output Note 3	t_{KSO1}	C = 30 pF Note 4			90	ns

Notes 1. When DAPmn = 0 and CKPmn = 0, or DAPmn = 1 and CKPmn = 1. The SIp setup time becomes "to $\overline{\text{SCKp}}$↓" when DAPmn = 0 and CKPmn = 1 or DAPmn = 1 and CKPmn = 0.

2. When DAPmn = 0 and CKPmn = 0 or DAPmn = 1 and CKPmn = 1. The SIp hold time becomes "from $\overline{\text{SCKp}}$↑" when DAPmn = 0 and CKPmn = 1 or DAPmn = 1 and CKPmn = 0.

3. When DAPmn = 0 and CKPmn = 0, or DAPmn = 1 and CKPmn = 1. The delay time to SOp output becomes "from $\overline{\text{SCKp}}$↑" when DAPmn = 0 and CKPmn = 1, or DAPmn = 1 and CKPmn = 0.

4. C is the load capacitance of the $\overline{\text{SCKp}}$ and SOp output lines.

5. t_{KCY1} ≥ 4/f_{CLK} must also be satisfied.

Caution Select the normal input buffer for the SIp pin and normal output mode and special slew rate for the SOp pin and $\overline{\text{SCKp}}$ pin.

Remark p: CSIp (p = 00, 01, 10, 11), m: Unit m (m = 0, 1), n: Channel n (n = 0, 1)

(4) During communication at same potential (CSI mode) (slave mode, $\overline{SCKp}$ … external clock input, normal slew rate)

(T_A = -40 to +150°C, 2.7 V ≤ EV_{DD0} = EV_{DD1} = V_{DD} ≤ 5.5 V, V_{SS} = EV_{SS0} = EV_{SS1} = 0 V)

Parameter	Symbol	Conditions		MIN.	TYP.	MAX.	Unit
$\overline{SCKp}$ cycle time	t_{KCY2}			8/f_{MCK}			ns
$\overline{SCKp}$ high-level width, low-level width	t_{KH2}, t_{KL2}			t_{KCY2}/2			ns
SIp setup time (to $\overline{SCKp}$↑)Note 1	t_{SIK2}			1/f_{MCK} + 20			ns
SIp hold time (from $\overline{SCKp}$↑)Note 2	t_{KSI2}			1/f_{MCK} + 31			ns
Delay time from $\overline{SCKp}$↓ to SOp outputNote 3	t_{KSO2}	C = 30 pFNote 4	4.0V ≤ V_{DD} = EV_{DD0} = EV_{DD1} ≤ 5.5V			2/f_{MCK} + 44	ns
			2.7V ≤ V_{DD} = EV_{DD0} = EV_{DD1} < 4.0V			2/f_{MCK} + 60	ns
$\overline{SSIp}$ setup time	t_{SSIK}	DAP = 0		120			ns
		DAP = 1		1/f_{MCK} + 120			ns
$\overline{SSIp}$ hold time	t_{KSSI}	DAP = 0		1/f_{MCK} + 120			ns
		DAP = 1		120			ns

Notes 1. When DAPmn = 0 and CKPmn = 0, or DAPmn = 1 and CKPmn = 1. The SIp setup time becomes "to $\overline{SCKp}$↓" when DAPmn = 0 and CKPmn = 1 or DAPmn = 1 and CKPmn = 0.

2. When DAPmn = 0 and CKPmn = 0 or DAPmn = 1 and CKPmn = 1. The SIp hold time becomes "from $\overline{SCKp}$↓" when DAPmn = 0 and CKPmn = 1 or DAPmn = 1 and CKPmn = 0.

3. When DAPmn = 0 and CKPmn = 0, or DAPmn = 1 and CKPmn = 1. The delay time to SOp output becomes "from $\overline{SCKp}$↑" when DAPmn = 0 and CKPmn = 1, or DAPmn = 1 and CKPmn = 0.

4. C is the load capacitance of the $\overline{SCKp}$ and SOp output lines.

Caution Select the normal input buffer for the SIp, $\overline{SCKp}$ and $\overline{SSIp}$ pins and normal output mode for the SOp pin.

Remarks 1. p: CSIp (p = 00, 01, 10, 11), m: Unit m (m = 0, 1), n: Channel n (n = 0, 1)

2. f_{MCK}: Serial array unit operation clock frequency

(5) During communication at same potential (CSI mode) (slave mode, $\overline{SCKp}$ … external clock input, special slew rate)

(T_A = -40 to +150°C, 4.0 V ≤ EV_{DD0} = EV_{DD1} = V_{DD} ≤ 5.5 V, V_{SS} = EV_{SS0} = EV_{SS1} = 0 V)

Parameter	Symbol	Conditions	MIN.	TYP.	MAX.	Unit
$\overline{SCKp}$ cycle time	t_{KCY2}	20 MHz < f_{MCK}	10/f_{MCK}			ns
		10 MHz < f_{MCK} ≤ 20 MHz	8/f_{MCK}			ns
		f_{MCK} ≤ 10 MHz	6/f_{MCK}			ns
$\overline{SCKp}$ high-level width, low-level width	t_{KH2}, t_{KL2}		t_{KCY2}/2			ns
SIp setup time (to $\overline{SCKp}$↑)Note1	t_{SIK2}		80			ns
SIp hold time (from $\overline{SCKp}$↑)Note 2	t_{KSI2}		1/f_{MCK} + 50			ns
Delay time from $\overline{SCKp}$↓ to SOp outputNote 3	t_{KSO2}	C = 30 pFNote 4			2/f_{MCK} + 80	ns
$\overline{SSIp}$ setup time	t_{SSIK}	DAP = 0	120			ns
		DAP = 1	1/f_{MCK} + 120			ns
$\overline{SSIp}$ hold time	t_{KSSI}	DAP = 0	1/f_{MCK} + 120			ns
		DAP = 1	120			ns

Notes 1. When DAPmn = 0 and CKPmn = 0, or DAPmn = 1 and CKPmn = 1. The SIp setup time becomes "to $\overline{SCKp}$↓" when DAPmn = 0 and CKPmn = 1 or DAPmn = 1 and CKPmn = 0.

2. When DAPmn = 0 and CKPmn = 0 or DAPmn = 1 and CKPmn = 1. The SIp hold time becomes "from $\overline{SCKp}$↓" when DAPmn = 0 and CKPmn = 1 or DAPmn = 1 and CKPmn = 0.

3. When DAPmn = 0 and CKPmn = 0, or DAPmn = 1 and CKPmn = 1. The delay time to SOp output becomes "from $\overline{SCKp}$↑" when DAPmn = 0 and CKPmn = 1, or DAPmn = 1 and CKPmn = 0.

4. C is the load capacitance of the $\overline{SCKp}$ and SOp output lines.

Caution Select the normal input buffer for the SIp, $\overline{SCKp}$ and $\overline{SSIp}$ pins and normal output mode and special slew rate for the SOp pin.

Remarks 1. p: CSIp (p = 00, 01, 10, 11), m: Unit m (m = 0, 1), n: Channel n (n = 0, 1)

2. f_{MCK}: Serial array unit operation clock frequency

CSI mode connection diagram (during communication at same potential)

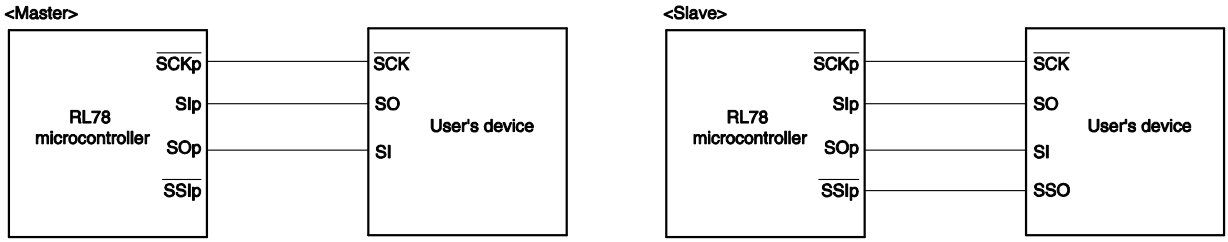

CSI mode serial transfer timing (during communication at same potential)

(When DAPmn = 0 and CKPmn = 0, or DAPmn = 1 and CKPmn = 1)

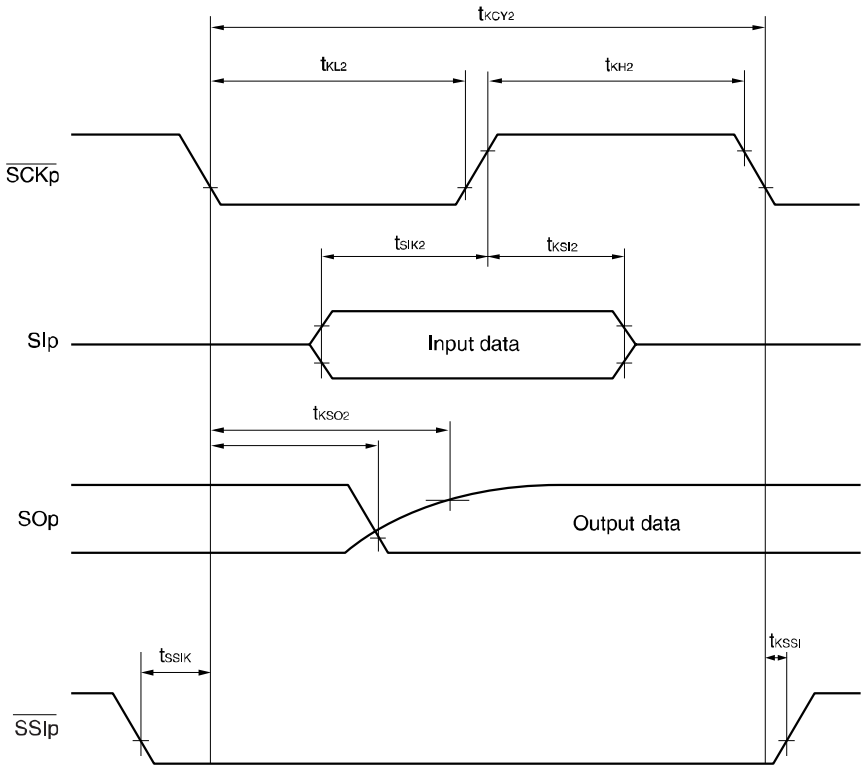

Remark p: CSIp (p = 00, 01, 10, 11), m: Unit m (m = 0, 1), n: Channel n (n = 0, 1)

CSI mode serial transfer timing (during communication at same potential)
(When DAPmn= 0 and CKPmn = 1, or DAPmn = 1 and CKPmn = 0)

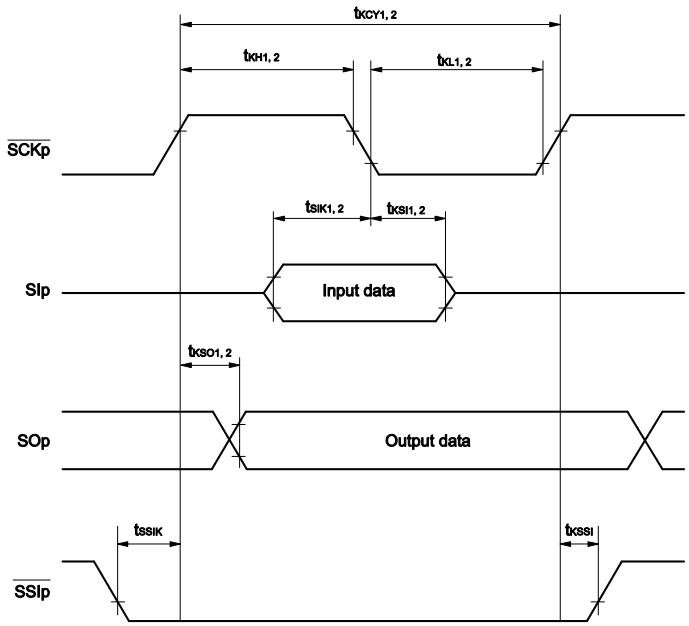

Remark p: CSIp (p = 00, 01, 10, 11), m: Unit m (m = 0, 1), n: Channel n (n = 0, 1)

(6) During communication at same potential (simplified I²C mode)
(SDAr: N-ch open-drain output (EV_{DD0} tolerance) mode, SCLr: normal output mode)

(T_A = -40 to +150°C, 2.7 V ≤ EV_{DD0} = EV_{DD1} = V_{DD} ≤ 5.5 V, V_{SS} = EV_{SS0} = EV_{SS1} = 0 V)

Parameter	Symbol	Conditions	MIN.	TYP.	MAX.	Unit
SCLr clock frequency	f_{SCL}				1000[Note]	kHz
Hold time when SCLr = "L"	t_{LOW}		475			ns
Hold time when SCLr = "H"	t_{HIGH}		475			ns
Data setup time (reception)	$t_{SU:DAT}$		$1/f_{MCK}$ + 85			ns
Data hold time (transmission)	$t_{HD:DAT}$	C_b = 50 pF, R_b = 2.7 kΩ	0		305	ns

Note $f_{CLK} \leq f_{MCK}/4$ must also be satisfied.

Simplified I²C mode connection diagram (during communication at same potential)

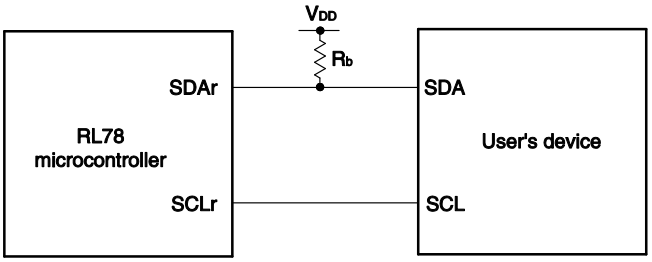

Simplified I²C mode serial transfer timing (during communication at same potential)

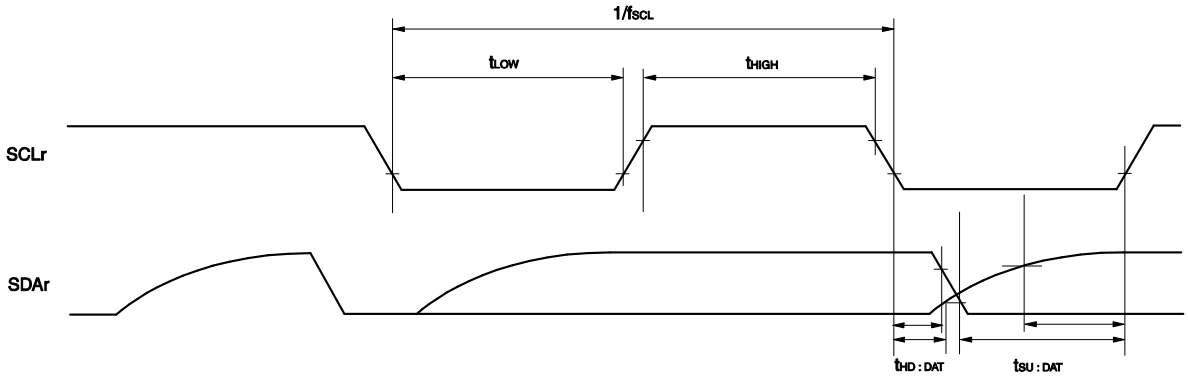

Caution Select the normal input buffer and N-ch open-drain output mode for the SDAr pin and normal output mode for the SCLr pin.

Remarks 1. R_b [Ω]: Communication line (SDAr) pull-up resistance, C_b [F]: Communication line (SCLr, SDAr) load capacitance
2. r: IICr (r = 00, 01, 10, 11)
3. f_{MCK}: Serial array unit operation clock frequency

(7) During communication at same potential (simplified I²C mode) (SDAr and SCLr: N-ch open-drain output (EV_{DD0} tolerance) mode)

(T_A = -40 to +150°C, 2.7 V ≤ EV_{DD0} = EV_{DD1} = V_{DD} ≤ 5.5 V, V_{SS} = EV_{SS0} = EV_{SS1} = 0 V)

Parameter	Symbol	Conditions	MIN.	MAX.	Unit
SCLr clock frequency	f_{SCL}			400[Note]	kHz
Hold time when SCLr = "L"	t_{LOW}	4.0 V ≤ V_{DD} ≤ 5.5 V, C_b = 100 pF, R_b = 1.7 kΩ	1300		ns
		2.7 V ≤ V_{DD} < 4.0 V, C_b = 100 pF, R_b = 2.7 kΩ			
Hold time when SCLr = "H"	t_{HIGH}	4.0 V ≤ V_{DD} ≤ 5.5 V, C_b = 100 pF, R_b = 1.7 kΩ	600		ns
		2.7 V ≤ V_{DD} < 4.0 V, C_b = 100 pF, R_b = 2.7 kΩ			
Data setup time (reception)	$t_{SU:DAT}$	4.0 V ≤ V_{DD} ≤ 5.5 V, C_b = 100 pF, R_b = 1.7 kΩ	1/f_{MCK} + 120		ns
		2.7 V ≤ V_{DD} < 4.0 V, C_b = 100 pF, R_b = 2.7 kΩ	1/f_{MCK} + 270		ns
Data hold time (transmission)	$t_{HD:DAT}$	4.0 V ≤ V_{DD} ≤ 5.5 V, C_b = 100 pF, R_b = 1.7 kΩ	0	300	ns
		2.7 V ≤ V_{DD} < 4.0 V, C_b = 100 pF, R_b = 2.7 kΩ			

Note f_{CLK} ≤ f_{MCK}/4 must also be satisfied.

Simplified I²C mode connection diagram (during communication at same potential)

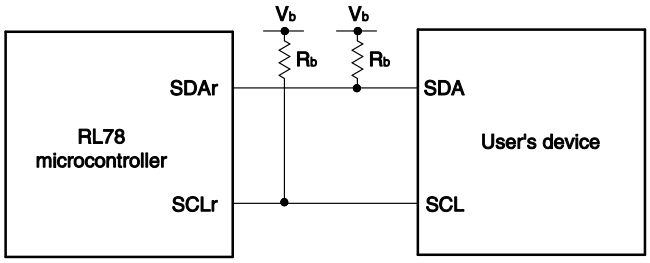

Caution Select the normal input buffer and N-ch open-drain output mode for the SDAr pin and SCLr pin.

Remarks 1. R_b [Ω]: Communication line (SDAr, SCLr) pull-up resistance, C_b [F]: Communication line (SDAr, SCLr) load capacitance, V_b[V]: Communication line voltage

2. r: IICr (r = 00, 01, 10, 11)

3. f_{MCK}: Serial array unit operation clock frequency

Simplified I²C mode serial transfer timing (during communication at same potential)

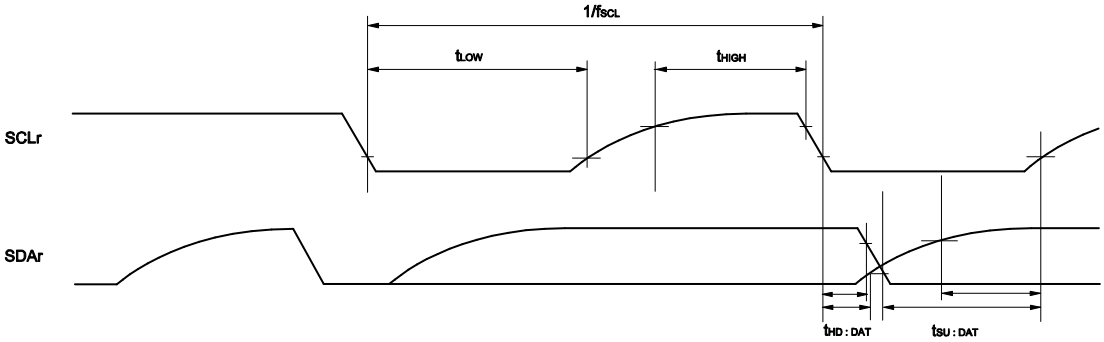

Remark r: IICr (r = 00, 01, 10, 11)

(8) Communication at different potential (UART mode) (TxD output buffer: N-ch open-drain, RxD input buffer: TTL)

(T_A = -40 to +150°C, 4.0 V ≤ EV_{DD0} = EV_{DD1} = V_{DD} ≤ 5.5 V, V_{SS} = EV_{SS0} = EV_{SS1} = 0 V)

Parameter	Symbol	Conditions			MIN.	TYP.	MAX.	Unit
Transfer rate	–	Reception	2.7 V ≤ V_b ≤ EV_{DD0}, V_{IH} = 2.2 V, V_{IL} = 0.8 V				f_{MCK}/6	bps
				Theoretical value of the maximum transfer rate Note (C_b = 30 pF)			4.0	Mbps
		Transmission	2.7 V ≤ V_b ≤ EV_{DD0}, V_{OH} = 2.2 V, V_{OL} = 0.8 V				Smaller number of the values given by f_{MCK}/6 and expression 1 is applicable.	bps
				Theoretical value of the maximum transfer rate Note (C_b = 30 pF) Normal slew rate			4.0	Mbps

Note Expression 1: Maximum transfer rate = $1 / [\{-C_b \times R_b \times \ln (1 - 2.2/V_b)\} \times 3]$

UART mode connection diagram (during communication at different potential)

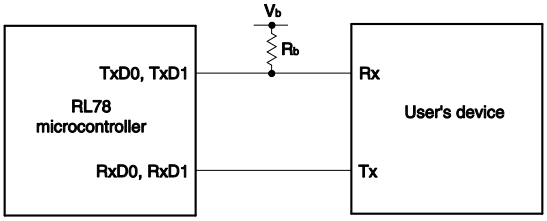

UART mode bit width (during communication at different potential) (reference)

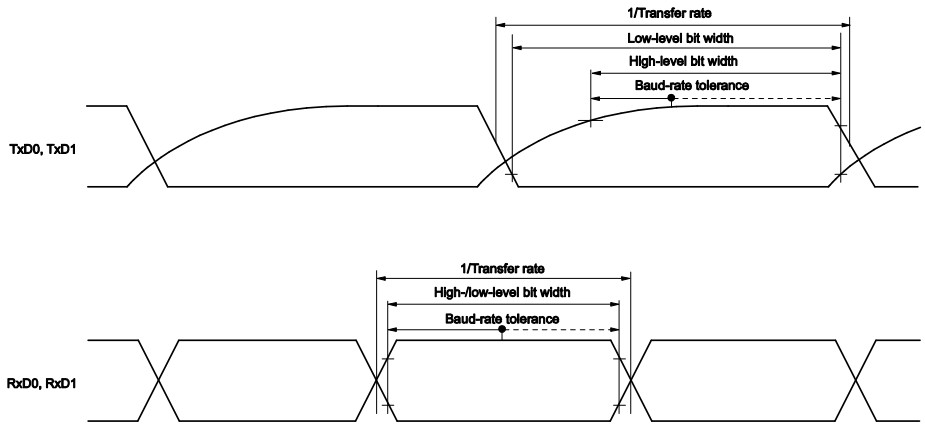

Caution Select the TTL input buffer for the RxD0 pin and RxD1 pin and N-ch open-drain output mode for the TxD0 pin and TxD1 pin.

Remarks 1. R_b [Ω]: Communication line (TxD) pull-up resistance, C_b [F]: Communication line (TxD) load capacitance, V_b [V]: Communication line voltage

2. f_{MCK}: Serial array unit operation clock frequency

(9) During communication at different potential (3-V supply system) (CSI mode) (master mode, $\overline{SCKp}$ … internal clock output, normal slew rate)

(T_A = -40 to +150°C, 4.0 V ≤ EV_{DD0} = EV_{DD1} = V_{DD} ≤ 5.5 V, V_{SS} = EV_{SS0} = EV_{SS1} = 0 V)

Parameter	Symbol	Conditions	MIN.	TYP.	MAX.	Unit
$\overline{SCKp}$ cycle time	t_{KCY1}	2.7 V ≤ V_b ≤ EV_{DD0}, C_b = 30 pF, R_b = 1.4 kΩ	400[Note3]			ns
$\overline{SCKp}$ high-level width	t_{KH1}	2.7 V ≤ V_b ≤ EV_{DD0}, C_b = 30 pF, R_b = 1.4 kΩ	t_{KCY1}/2 – 75			ns
$\overline{SCKp}$ low-level width	t_{KL1}	2.7 V ≤ V_b ≤ EV_{DD0}, C_b = 30 pF, R_b = 1.4 kΩ	t_{KCY1}/2 – 20			ns
SIp setup time (to $\overline{SCKp}$↑)[Note 1]	t_{SIK1}	2.7 V ≤ V_b ≤ EV_{DD0}, C_b = 30 pF, R_b = 1.4 kΩ	150			ns
SIp setup time (to $\overline{SCKp}$↓)[Note 2]	t_{SIK1}	2.7 V ≤ V_b ≤ EV_{DD0}, C_b = 30 pF, R_b = 1.4 kΩ	70			ns
SIp hold time (from $\overline{SCKp}$↑)[Note 1]	t_{KSI1}	2.7 V ≤ V_b ≤ EV_{DD0}, C_b = 30 pF, R_b = 1.4 kΩ	30			ns
SIp hold time (from $\overline{SCKp}$↓)[Note 2]	t_{KSI1}	2.7 V ≤ V_b ≤ EV_{DD0}, C_b = 30 pF, R_b = 1.4 kΩ	30			ns
Delay time from $\overline{SCKp}$↓ to SOp output[Note1]	t_{KSO1}	2.7 V ≤ V_b ≤ EV_{DD0}, C_b = 30 pF, R_b = 1.4 kΩ			120	ns
Delay time from $\overline{SCKp}$↑ to SOp output[Note2]	t_{KSO1}	2.7 V ≤ V_b ≤ EV_{DD0}, C_b = 30 pF, R_b = 1.4 kΩ			40	ns

Notes 1. When DAPmn = 0 and CKPmn = 0, or DAPmn = 1 and CKPmn = 1.

2. When DAPmn = 0 and CKPmn = 1, or DAPmn = 1 and CKPmn = 0.

3. t_{KCY1} ≥ 4/f_{CLK} must also be satisfied.

CSI mode connection diagram (during communication at different potential)

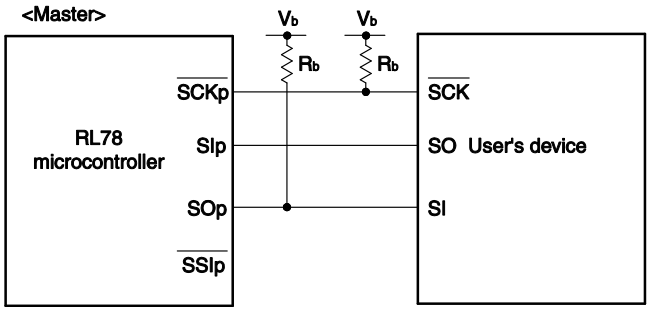

Caution Select the TTL input buffer for the SIp pin and N-ch open-drain output mode for the SOp pin and $\overline{\text{SCKp}}$ pin.

Remarks 1. R_b [Ω]: Communication line ($\overline{\text{SCKp}}$, SOp) pull-up resistance, C_b [F]: Communication line (SOp, $\overline{\text{SCKp}}$) load capacitance, V_b [V]: Communication line voltage

2. p: CSIp (p = 00, 01, 10, 11), m: Unit m (m = 0, 1), n: Channel n (n = 0, 1)

3. AC characteristics of the serial array unit during communication at different potential in CSI mode are measured with the V_{IH} and V_{IL} below:

When 4.0 V ≤ EV_{DD0} ≤ 5.5 V, 2.7 V ≤ V_b ≤ 4.0 V: V_{IH} = 2.2 V, V_{IL} = 0.8 V

CSI mode serial transfer timing (master mode) (during communication at different potential)
(When DAPmn = 0 and CKPmn = 0, or DAPmn = 1 and CKPmn = 1)

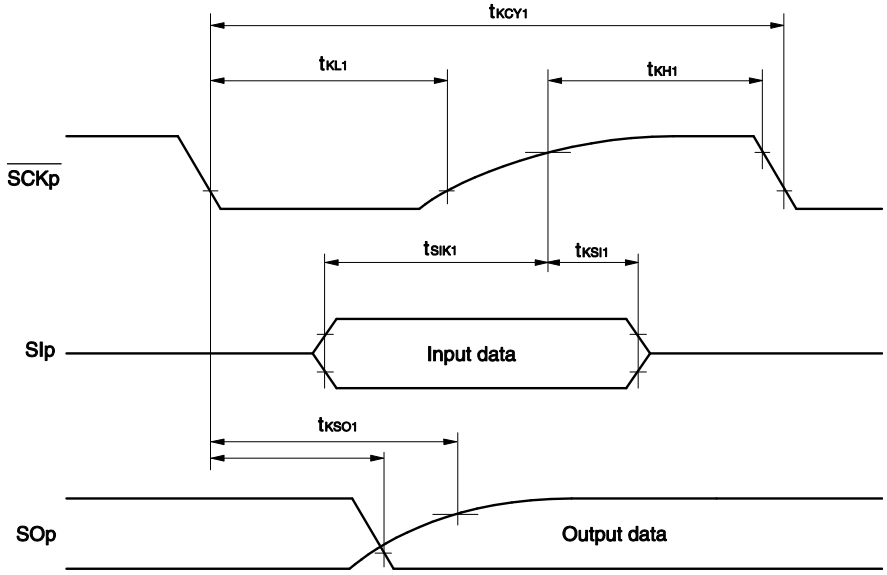

CSI mode serial transfer timing (master mode) (during communication at different potential)
(When DAPmn= 0 and CKPmn = 1, or DAPmn = 1 and CKPmn = 0)

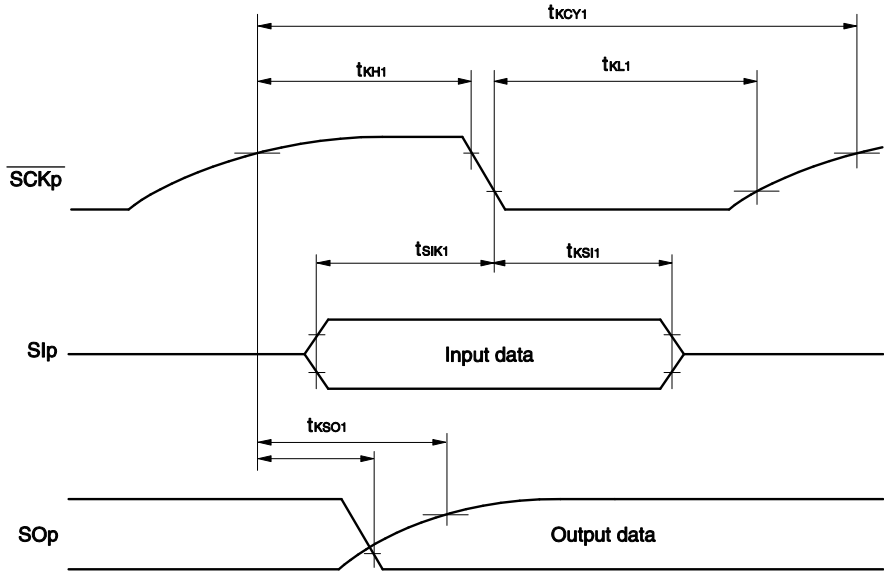

(10) During communication at different potential (3-V supply system) (CSI mode) (slave mode, $\overline{\text{SCKp}}$ … external clock input, normal slew rate)

(T_A = -40 to +150°C, 4.0 V ≤ EV_{DD0} = EV_{DD1} = V_{DD} ≤ 5.5 V, V_{SS} = EV_{SS0} = EV_{SS1} = 0 V)

Parameter	Symbol	Conditions	MIN.	TYP.	MAX.	Unit

$\overline{SCKp}$ cycle time	t_{KCY2}	2.7 V ≤ V_b ≤ V_{DD}	20 MHz < f_{MCK} ≤ 24 MHz	12/f_{MCK}			ns
			8 MHz < f_{MCK} ≤ 20 MHz	10/f_{MCK}			ns
			4 MHz < f_{MCK} ≤ 8 MHz	8/f_{MCK}			ns
			f_{MCK} ≤ 4 MHz	6/f_{MCK}			ns
$\overline{SCKp}$ high-level width, low-level width	t_{KH2}, t_{KL2}	2.7 V ≤ V_b ≤ V_{DD}		t_{KCY2}/2 – 20			ns
SIp setup time (to $\overline{SCKp}$↑)[Note 1]	t_{SIK2}			90			ns
SIp hold time (from $\overline{SCKp}$↑)[Note 2]	t_{KSI2}			1/f_{MCK} + 50			ns
Delay time from $\overline{SCKp}$↓ to SOp output[Note 3]	t_{KSO2}	2.7 V ≤ V_b ≤ V_{DD}, C_b = 30 pF, R_b = 1.4 kΩ				2/f_{MCK} + 120	ns
$\overline{SSIp}$ setup time	t_{SSIK}	DAP = 0		120			ns
		DAP = 1		1/f_{MCK} + 120			ns
$\overline{SSIp}$ hold time	t_{KSSI}	DAP = 0		1/f_{MCK} + 120			ns
		DAP = 1		120			ns

Notes 1. When DAPmn = 0 and CKPmn = 0, or DAPmn = 1 and CKPmn = 1. The SIp setup time becomes "to $\overline{SCKp}$↓" when DAPmn = 0 and CKPmn = 1 or DAPmn = 1 and CKPmn = 0.

2. When DAPmn = 0 and CKPmn = 0 or DAPmn = 1 and CKPmn = 1. The SIp hold time becomes "from $\overline{SCKp}$↓" when DAPmn = 0 and CKPmn = 1 or DAPmn = 1 and CKPmn = 0.

3. When DAPmn = 0 and CKPmn = 0, or DAPmn = 1 and CKPmn = 1. The delay time to SOp output becomes "from $\overline{SCKp}$↑" when DAPmn = 0 and CKPmn = 1, or DAPmn = 1 and CKPmn = 0.

CSI mode connection diagram (during communication at different potential)

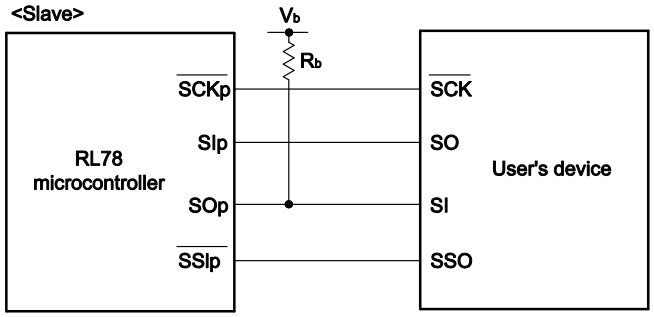

Caution Select the TTL input buffer for the SIp, $\overline{\text{SCKp}}$ and $\overline{\text{SSIp}}$ pins and N-ch open-drain output mode for the SOp pin.

Remarks 1. R_b [Ω]: Communication line (SOp) pull-up resistance, C_b [F]: Communication line (SOp) load capacitance, V_b [V]: Communication line voltage

2. p: CSIp (p = 00, 01, 10, 11), m: Unit m (m = 0, 1), n: Channel n (n = 0, 1)

3. AC characteristics of the serial array unit during communication at different potential in CSI mode are measured with the V_{IH} and V_{IL} below:

When 4.0 V ≤ EV_{DD0} ≤ 5.5 V, 2.7 V ≤ V_b ≤ 4.0 V: V_{IH} = 2.2 V, V_{IL} = 0.8 V

CSI mode serial transfer timing (slave mode) (during communication at different potential)

(When DAPmn = 0 and CKPmn = 0, or DAPmn = 1 and CKPmn = 1)

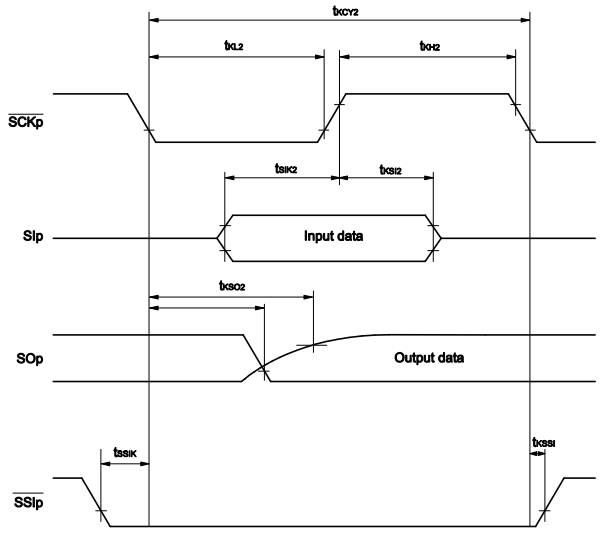

CSI mode serial transfer timing (slave mode) (during communication at different potential)

(When DAPmn= 0 and CKPmn = 1, or DAPmn = 1 and CKPmn = 0)

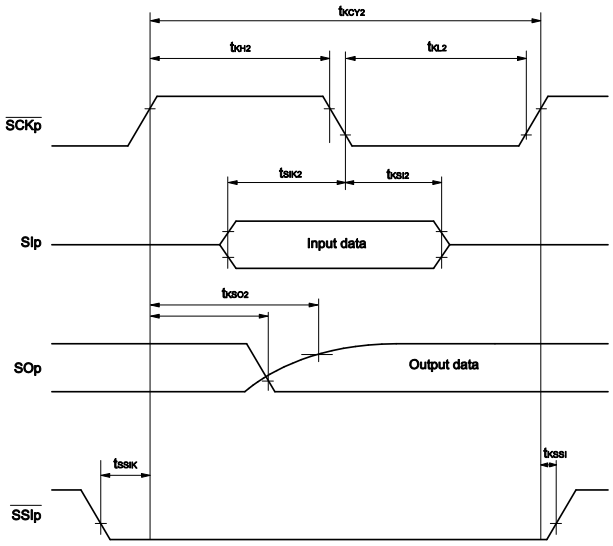

(11) During communication at different potential (3-V supply system) (simplified I²C mode)
(SDAr: TTL input buffer mode or N-ch open-drain output (EV_{DD0} tolerance) mode, SCLr: N-ch open-drain output (EV_{DD0} tolerance) mode)

(T_A = -40 to +150°C, 4.0 V ≤ EV_{DD0} = EV_{DD1} = V_{DD} ≤ 5.5 V, V_{SS} = EV_{SS0} = EV_{SS1} = 0 V)

Parameter	Symbol	Conditions	MIN.	MAX.	Unit

SCLr clock frequency	f_{SCL}	2.7 V ≤ V_b ≤ 4.0 V, C_b = 100 pF, R_b = 1.4 kΩ		400[Note]	kHz
Hold time when SCLr = "L"	t_{LOW}	2.7 V ≤ V_b ≤ 4.0 V, C_b = 100 pF, R_b = 1.4 kΩ	1200		ns
Hold time when SCLr = "H"	t_{HIGH}	2.7 V ≤ V_b ≤ 4.0 V, C_b = 100 pF, R_b = 1.4 kΩ	600		ns
Data setup time (reception)	$t_{SU:DAT}$	2.7 V ≤ V_b ≤ 4.0 V, C_b = 100 pF, R_b = 1.4 kΩ	135 + 1/f_{MCK}		ns
Data hold time (transmission)	$t_{HD:DAT}$	2.7 V ≤ V_b ≤ 4.0 V, C_b = 100 pF, R_b = 1.4 kΩ	0	140	ns

Note f_{SCL} ≤ f_{MCK}/4 must also be satisfied.

Simplified I²C mode connection diagram (during communication at different potential)

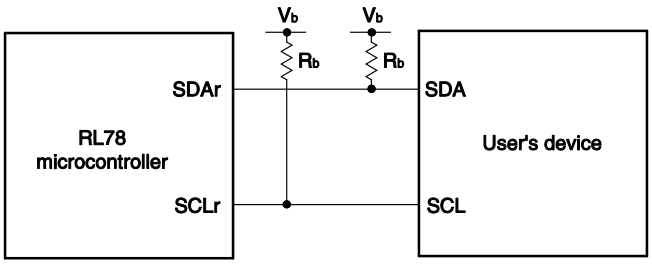

Simplified I²C mode serial transfer timing (during communication at different potential)

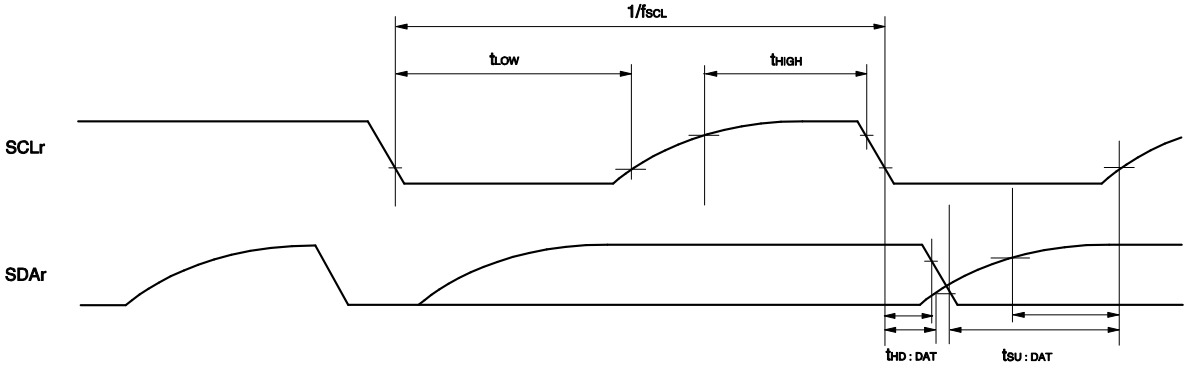

Caution Select the TTL input buffer and the N-ch open-drain output mode for the SDAr pin and N-ch open-drain output mode for the SCLr pin.

Remarks 1. R_b [Ω]: Communication line (SDAr, SCLr) pull-up resistance, C_b [F]: Communication line (SDAr, SCLr) load capacitance, V_b [V]: Communication line voltage

2. f_{MCK}: Serial array unit operation clock frequency

36.5.2 Serial Interface IICA

(T_A = -40 to +150°C, 2.7 V ≤ EV_{DD0} = EV_{DD1} = V_{DD} ≤ 5.5 V, V_{SS} = EV_{SS0} = EV_{SS1} = 0 V)

Parameter	Symbol	Conditions	Normal Mode		Fast Mode		Fast Mode Plus		Unit
			MIN.	MAX.	MIN.	MAX.	MIN.	MAX.	
SCLA0 clock frequency	f_{SCL}	Fast mode plus: 10 MHz ≤ f_{CLK}					0	1000	kHz
		Fast mode: 3.5 MHz ≤ f_{CLK}			0	400			kHz
		Normal mode: 1 MHz ≤ f_{CLK}	0	100					kHz
Setup time of restart condition[Note 1]	$t_{SU:STA}$		4.7		0.6		0.26		μs
Hold time	$t_{HD:STA}$		4.0		0.6		0.26		μs
Hold time when SCLA0 = "L"	t_{LOW}		4.7		1.3		0.5		μs
Hold time when SCLA0 = "H"	t_{HIGH}		4.0		0.6		0.26		μs
Data setup time (reception)	$t_{SU:DAT}$		250		100		50		ns
Data hold time (transmission)[Note 2]	$t_{HD:DAT}$		0	3.45	0	0.9	0		μs
Setup time of stop condition	$t_{SU:STO}$		4.0		0.6		0.26		μs
Bus-free time	t_{BUF}		4.7		1.3		0.5		μs

Notes 1. The first clock pulse is generated after this period when the start/restart condition is detected.

2. The maximum value (MAX.) of $t_{HD:DAT}$ is during normal transfer and a wait state is inserted in the $\overline{ACK}$ (acknowledge) timing.

Remark The maximum value of C_b (communication line capacitance) and the value of R_b (communication line pull-up resistor) at that time in each mode are as follows.

Standard mode: C_b = 400 pF, R_b = 2.7 kΩ

Fast mode: C_b = 320 pF, R_b = 1.1 kΩ

Fast mode plus: C_b = 120 pF, R_b = 1.1 kΩ

IICA serial transfer timing

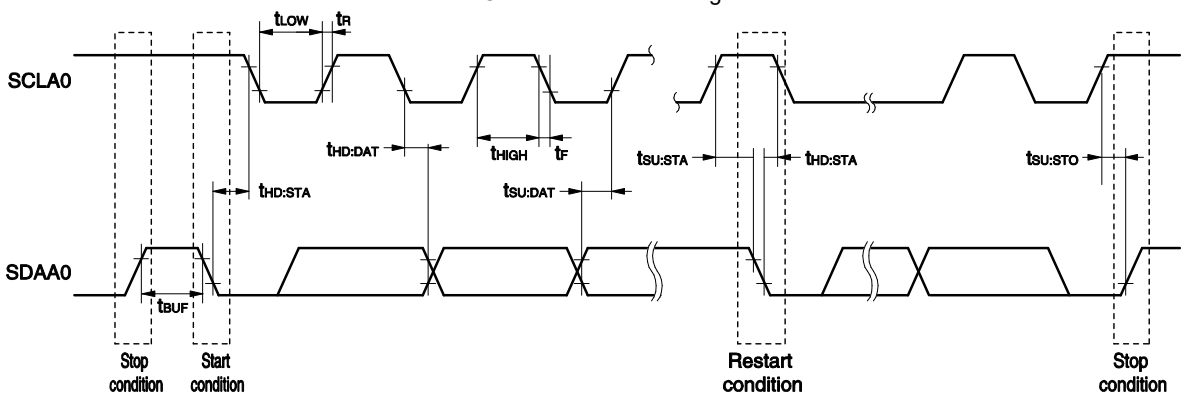

36.5.3 On-chip Debug (UART)

(T_A = -40 to +150°C, 2.7 V ≤ EV_{DD0} = EV_{DD1} = V_{DD} ≤ 5.5 V, V_{SS} = EV_{SS0} = EV_{SS1} = 0 V)

Parameter	Symbol	Conditions	MIN.	TYP.	MAX.	Unit
Transfer rate	-		115.2 k		1 M	bps

36.5.4 LIN/UART Module (RLIN3) UART Mode

(T_A = -40 to +150°C, 2.7 V ≤ EV_{DD0} = EV_{DD1} = V_{DD} ≤ 5.5 V, V_{SS} = EV_{SS0} = EV_{SS1} = 0 V)

Parameter	Symbol	Conditions		MIN.	TYP.	MAX.	Unit
Transfer rate	-	Operation mode, HALT mode	LIN communication clock source (f_{CLK} or f_{MX}): 4 to 24 MHz			4000	kbps
<R>		SNOOZE mode	LIN communication clock source (f_{CLK}): 1 to 24 MHz FRQSEL4 = 0 in the user option byte (000C2H/020C2H)			2.4	
<R>			LIN communication clock source (f_{CLK}): 1 to 24 MHz FRQSEL4 = 1 in the user option byte (000C2H/020C2H)			1.2	

36.6 Analog Characteristics

36.6.1 A/D Converter Characteristics

(1) When AV_{REF} (+) = AV_{REFP}/ANI0 (ADREFP1 = 0, ADREFP0 = 1), AV_{REF} (-) = AV_{REFM}/ANI1 (ADREFM = 1), target ANI pin: ANI2 to ANI23 (power supply: V_{DD})

(T_A = -40 to +150°C, 2.7 V ≤ EV_{DD0} = EV_{DD1} = V_{DD} ≤ 5.5 V, V_{SS} = EV_{SS0} = EV_{SS1} = 0 V, Reference voltage (+) = AV_{REFP}, Reference voltage (-) = AV_{REFM} = 0 V)

Parameter	Symbol	Conditions		MIN.	TYP.	MAX.	Unit
Resolution	RES			8		10	bit
Overall error[Note 1]	AINL	10-bit resolution AV_{REFP} = V_{DD}	4.0 V ≤ V_{DD} ≤ 5.5 V		1.2	±3.0	LSB
			2.7 V ≤ V_{DD} < 4.0 V		1.2	±3.5	LSB
Conversion time	t_{CONV}	10-bit resolution AV_{REFP} = V_{DD}	4.0 V ≤ V_{DD} ≤ 5.5 V	2.125		39	μs
			2.7 V ≤ V_{DD} < 4.0 V	3.1875		39	μs
Zero-scale error[Notes 1, 2]	EZS	10-bit resolution AV_{REFP} = V_{DD}	2.7 V ≤ V_{DD} ≤ 5.5 V			±0.25	%FSR
Full-scale error[Notes 1, 2]	EFS	10-bit resolution AV_{REFP} = V_{DD}	2.7 V ≤ V_{DD} ≤ 5.5 V			±0.25	%FSR
Integral linearity error[Note 1]	ILE	10-bit resolution AV_{REFP} = V_{DD}	2.7 V ≤ V_{DD} ≤ 5.5 V			±2.5	LSB
Differential linearity error[Note 1]	DLE	10-bit resolution AV_{REFP} = V_{DD}	2.7 V ≤ V_{DD} ≤ 5.5 V			±1.5	LSB
Reference voltage (+)	AV_{REFP}			2.7		V_{DD}	V
Analog input voltage	V_{AIN}			0		AV_{REFP}	V
Internal reference voltage (+)	V_{BGR}	2.7 V ≤ V_{DD} ≤ 5.5 V		1.38	1.45	1.52	V

Notes 1. Excludes quantization error (±1/2 LSB).

2. This value is indicated as a ratio (%FSR) to the full-scale value.

(2) When AV_{REF} (+) = AV_{REFP}/ANI0 (ADREFP1 = 0, ADREFP0 = 1), AV_{REF} (-) = AV_{REFM}/ANI1 (ADREFM = 1), target ANI pin: ANI24 to ANI30 (power supply: EV_{DD0})

(T_A = -40 to +150°C, 2.7 V ≤ EV_{DD0} = EV_{DD1} = V_{DD} ≤ 5.5 V, V_{SS} = EV_{SS0} = EV_{SS1} = 0 V, Reference voltage (+) = AV_{REFP}, Reference voltage (-) = AV_{REFM} = 0 V)

Parameter	Symbol	Conditions		MIN.	TYP.	MAX.	Unit
Resolution	RES			8		10	bit
Overall error[Note 1]	AINL	10-bit resolution AV_{REFP} = V_{DD}	4.0 V ≤ V_{DD} ≤ 5.5 V		1.2	±4.5	LSB
			2.7 V ≤ V_{DD} < 4.0 V		1.2	±5.0	LSB
Conversion time	t_{CONV}	10-bit resolution AV_{REFP} = V_{DD}	4.0 V ≤ V_{DD} ≤ 5.5 V	2.125		39	μs
			2.7 V ≤ V_{DD} < 4.0 V	3.1875		39	μs
Zero-scale error[Notes 1, 2]	EZS	10-bit resolution AV_{REFP} = V_{DD}	2.7 V ≤ V_{DD} ≤ 5.5 V			±0.35	%FSR
Full-scale error[Notes 1, 2]	EFS	10-bit resolution AV_{REFP} = V_{DD}	2.7 V ≤ V_{DD} ≤ 5.5 V			±0.35	%FSR
Integral linearity error[Note 1]	ILE	10-bit resolution AV_{REFP} = V_{DD}	2.7 V ≤ V_{DD} ≤ 5.5 V			±3.5	LSB
Differential linearity error[Note 1]	DLE	10-bit resolution AV_{REFP} = V_{DD}	2.7 V ≤ V_{DD} ≤ 5.5 V			±2.0	LSB
Reference voltage (+)	AV_{REFP}			2.7		V_{DD}	V
Analog input voltage	V_{AIN}			0		AV_{REFP} and EV_{DD0}	V
Internal reference voltage (+)	V_{BGR}	2.7 V ≤ V_{DD} ≤ 5.5 V		1.38	1.45	1.52	V

Notes 1. Excludes quantization error (±1/2 LSB).

2. This value is indicated as a ratio (%FSR) to the full-scale value.

(3) When AV_{REF} (+) = V_{DD} (ADREFP1 = 0, ADREFP0 = 0), AV_{REF} (-) = V_{SS} (ADREFM = 0), target ANI pin: ANI0 to ANI23, ANI24 to ANI30

(T_A = -40 to +150°C, 2.7 V ≤ EV_{DD0} = EV_{DD1} = V_{DD} ≤ 5.5 V, V_{SS} = EV_{SS0} = EV_{SS1} = 0 V, Reference voltage (+) = V_{DD}, Reference voltage (-) = V_{SS})

Parameter	Symbol	Conditions		MIN.	TYP.	MAX.	Unit
Resolution	RES			8		10	bit
Overall error[Note 1]	AINL	10-bit resolution ANI0 to ANI23	4.0 V ≤ V_{DD} ≤ 5.5 V		1.2	±5.0	LSB
			2.7 V ≤ V_{DD} < 4.0 V		1.2	±5.5	LSB
		10-bit resolution ANI24 to ANI30	4.0 V ≤ V_{DD} ≤ 5.5 V		1.2	±6.5	LSB
			2.7 V ≤ V_{DD} < 4.0 V		1.2	±7.0	LSB
Conversion time	t_{CONV}	10-bit resolution	4.0 V ≤ V_{DD} ≤ 5.5 V	2.125		39	μs
			2.7 V ≤ V_{DD} < 4.0 V	3.1875		39	μs
Zero-scale error[Notes 1, 2]	EZS	10-bit resolution ANI0 to ANI23	2.7 V ≤ V_{DD} ≤ 5.5 V			±0.50	%FSR
		10-bit resolution ANI24 to ANI30	2.7 V ≤ V_{DD} ≤ 5.5 V			±0.60	%FSR
Full-scale error[Notes 1, 2]	EFS	10-bit resolution ANI0 to ANI23	2.7 V ≤ V_{DD} ≤ 5.5 V			±0.50	%FSR
		10-bit resolution ANI24 to ANI30	2.7 V ≤ V_{DD} ≤ 5.5 V			±0.60	%FSR
Integral linearity error[Note 1]	ILE	10-bit resolution ANI0 to ANI23	2.7 V ≤ V_{DD} ≤ 5.5 V			±3.5	LSB
		10-bit resolution ANI24 to ANI30	2.7 V ≤ V_{DD} ≤ 5.5 V			±4.0	LSB
Differential linearity error[Note 1]	DLE	10-bit resolution	2.7 V ≤ V_{DD} ≤ 5.5 V			±2.0	LSB
Analog input voltage	V_{AIN}	ANI0 to ANI23[Note 3]		0		V_{DD}	V
		ANI24 to ANI30[Note 3]		EV_{SS}		EV_{DD0}	V
Internal reference voltage (+)	V_{BGR}	2.7 V ≤ V_{DD} ≤ 5.5 V		1.38	1.45	1.52	V

Notes 1. Excludes quantization error (±1/2 LSB).

2. This value is indicated as a ratio (%FSR) to the full-scale value.

3. The number of pins depends on the product. For details, refer to **2.1 Pin Function List**.

<R> **(4) When AV_{REF} (+) = internal reference voltage (ADREFP1 = 1, ADREFP0 = 0), AV_{REF} (-) = AV_{REFM}/ANI1 (ADREFM = 1), target ANI pin: ANI0, ANI2 to ANI23, ANI24 to ANI30**

(T_A = -40 to +150°C, 2.7 V ≤ EV_{DD0} = EV_{DD1} = V_{DD} ≤ 5.5 V, V_{SS} = EV_{SS0} = EV_{SS1} = 0 V, Reference voltage (+) = V_{BGR}, Reference voltage (-) = AV_{REFM} = 0 V)

Parameter	Symbol	Conditions		MIN.	TYP.	MAX.	Unit
Resolution	RES				8		bit
Conversion time	t_{CONV}	8-bit resolution	2.7 V ≤ V_{DD} ≤ 5.5 V	17		39	μs
Zero-scale error[Notes 1, 2]	EZS	8-bit resolution	2.7 V ≤ V_{DD} ≤ 5.5 V			±0.60	%FSR
Integral linearity error[Note 1]	ILE	8-bit resolution	2.7 V ≤ V_{DD} ≤ 5.5 V			±2.0	LSB
Differential linearity error[Note 1]	DLE	8-bit resolution	2.7 V ≤ V_{DD} ≤ 5.5 V			±1.0	LSB
Reference voltage (+)	V_{BGR}			1.38	1.45	1.52	V
Analog input voltage	V_{AIN}			0		V_{BGR}	V

Notes 1. Excludes quantization error (±1/2 LSB).

2. This value is indicated as a ratio (%FSR) to the full-scale value.

36.6.2 Temperatures Sensor Characteristics

(T_A = -40 to +150°C, 2.7 V ≤ EV_{DD0} = EV_{DD1} = V_{DD} ≤ 5.5 V, V_{SS} = EV_{SS0} = EV_{SS1} = 0 V)

Parameter	Symbol	Conditions	MIN.	TYP.	MAX.	Unit
Temperature sensor output voltage	V_{TMPS25}	Setting ADS register = 80H, T_A = +25°C		1.1		V
Reference output voltage	V_{CONST}	Setting ADS register = 81H	1.38	1.45	1.52	V
Temperature coefficient	F_{VTMPS}	Temperature sensor that depends on the temperature		-3.3		mV/°C
Operation stabilization wait time	t_{AMP}		5			μs

36.6.3 D/A Converter Characteristics

(T_A = -40 to +150°C, 2.7 V ≤ EV_{DD0} = EV_{DD1} = V_{DD} ≤ 5.5 V, V_{SS} = EV_{SS0} = EV_{SS1} = 0 V)

Parameter	Symbol	Conditions		MIN.	TYP.	MAX.	Unit
Resolution	RES					8	bit
Overall error	AINL	Rload = 4 MΩ	2.7 V ≤ V_{DD} ≤ 5.5 V			-2.5/+3.0	LSB
		Rload = 8 MΩ	2.7 V ≤ V_{DD} ≤ 5.5 V			-2.5/+3.0	LSB
Settling time	t_{SET}	Cload = 20 pF	2.7 V ≤ V_{DD} ≤ 5.5 V			3	μs

36.6.4 Comparator Characteristics

(T_A = -40 to +150°C, 2.7 V ≤ EV_{DD0} = EV_{DD1} = V_{DD} ≤ 5.5 V, V_{SS} = EV_{SS0} = EV_{SS1} = 0 V)

Parameter	Symbol	Conditions	MIN.	TYP.	MAX.	Unit
Input offset voltage	V_{IOCMP}			±5	±90	mV
Input voltage range	V_{ICMP}		0		V_{DD}	V
Response time	t_{CR}, t_{CF}	Input amplitude ±100 mV		70	700	ns
Stabilization wait time during input channel switching[Note 1]	t_{WAIT}	Input amplitude ±100 mV	800			ns
Operation stabilization wait time[Note 2]	t_{CMP}	3.3 V ≤ V_{DD} ≤ 5.5 V	1			μs
		2.7 V ≤ V_{DD} < 3.3 V	3			μs

Notes 1. Period of time from when the comparator input channel is switched until the comparator is switched to output

2. Period of time from when the comparator operation is enabled (HCMPON bit in CMPCTL is set to 1) until the comparator satisfies the DC/AC characteristics.

36.6.5 POR Circuit Characteristics

(T_A = -40 to +150°C, V_{SS} = EV_{SS0} = EV_{SS1} = 0 V)

Parameter	Symbol	Conditions	MIN.	TYP.	MAX.	Unit
<R> Detection voltage[Note 1]	V_{POR}	Power supply rise time	1.48	1.56	1.67	V
	V_{PDR}	Power supply fall time	1.47	1.55	1.66	V
<R> Minimum pulse width[Note 2]	T_{PW}		300			μs
Detection delay time	T_{PD}				350	μs

Notes 1. This indicates the POR circuit characteristics, and normal operation is not guaranteed under the condition of less than lower limit operation voltage (2.7 V).

<R> 2. Minimum time required for a POR reset when VDD exceeds below VPDR.

<R>

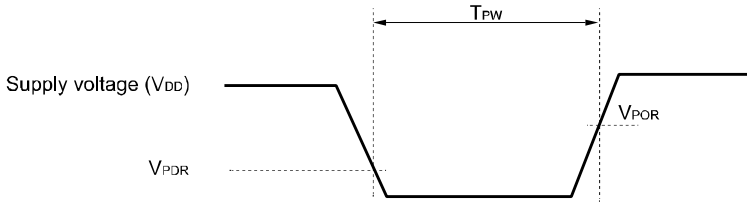

36.6.6 LVD Circuit Characteristics

(1) LVD detection voltage of interrupt mode or reset mode

(T_A = -40 to +150°C, $V_{PDR} \leq EV_{DD0} = EV_{DD1} = V_{DD} \leq 5.5$ V, $V_{SS} = EV_{SS0} = EV_{SS1} = 0$ V)

Parameter		Symbol	Conditions	MIN.	TYP.	MAX.	Unit
Detection voltage	Supply voltage level	V_{LVD0}	Power supply rise time	4.62	4.74	5.22	V
			Power supply fall time	4.52	4.64	5.11	V
		V_{LVD1}	Power supply rise time	4.50	4.62	5.09	V
			Power supply fall time	4.40	4.52	4.98	V
		V_{LVD2}	Power supply rise time	4.30	4.42	4.87	V
			Power supply fall time	4.21	4.32	4.76	V
<R>		V_{LVD3}	Power supply rise time	3.13	3.22	3.66	V
			Power supply fall time	3.07	3.15	3.47	V
<R>		V_{LVD4}	Power supply rise time	2.95	3.02	3.44	V
			Power supply fall time	2.89	2.96	3.23	V
<R>		V_{LVD5}	Power supply rise time	2.74	2.81	3.22	V
			Power supply fall time	2.68 Note	2.75	3.00	V
Minimum pulse width		t_{LW}		300			μs
Detection delay time		t_{LD}				300	μs

Note The minimum value exceeds below the lower limit operation voltage (2.7 V), however, in reset mode, normal operation (same behavior when V_{DD} = 2.7 V) is possible until a reset is effected at the power supply falling time.

<R> #### (2) LVD detection voltage of interrupt & reset mode

(T_A = -40 to +150°C, $V_{PDR} \leq EV_{DD0} = EV_{DD1} = V_{DD} \leq 5.5$ V, $V_{SS} = EV_{SS0} = EV_{SS1} = 0$ V)

Parameter	Symbol	Conditions		MIN.	TYP.	MAX.	Unit
Interrupt and reset mode	V_{LVD5}	VPOC2, VPOC1, VPOC0 = 0, 0, 1 Note 1, falling reset voltage: 2.75 V		2.68 Note 2	2.75	3.00	V
<R>	V_{LVD2}	LVIS1, LVIS0 = 0, 0	Rising release reset voltage	4.30	4.42	4.87	V
			Falling interrupt voltage	4.21	4.32	4.76	V
	V_{LVD5}	VPOC2, VPOC1, VPOC0 = 0, 1, 0 Note 1, falling reset voltage: 2.75 V		2.68 Note 2	2.75	3.00	V
	V_{LVD1}	LVIS1, LVIS0 = 0, 0	Rising release reset voltage	4.50	4.62	5.09	V
			Falling interrupt voltage	4.40	4.52	4.98	V
	V_{LVD5}	VPOC2, VPOC1, VPOC0 = 0, 1, 1 Note 1, falling reset voltage: 2.75 V		2.68 Note 2	2.75	3.00	V
<R>	V_{LVD3}	LVIS1, LVIS0 = 0, 1	Rising release reset voltage	3.13	3.22	3.66	V
			Falling interrupt voltage	3.07	3.15	3.47	V
	V_{LVD0}	LVIS1, LVIS0 = 0, 0	Rising release reset voltage	4.62	4.74	5.22	V
			Falling interrupt voltage	4.52	4.64	5.11	V

Notes 1. These values indicate setting values of option bytes.

2. The minimum value exceeds below the lower limit operation voltage (2.7 V), however, in reset mode, normal operation (same behavior when V_{DD} = 2.7 V) is possible until a reset is effected at the power supply falling time.

36.7 Power Supply Voltage Rising Time

(T_A = -40 to +150°C, V_{SS} = EV_{SS0} = EV_{SS1} = 0 V)

Parameter	Symbol	Conditions	MIN.	TYP.	MAX.	Unit
Maximum power supply voltage rising slope	S_{vrmax}	0 V → V_{DD} (VPOC2 = 0 or 1[Note 2])			50[Note 3]	V/ms
Minimum power supply voltage rising slope [Note 1]	S_{vrmin}	0 V → 2.7 V	6.5			V/ms

Notes 1. The minimum power supply voltage rising slope is applied only under the following condition.
When the voltage detection (LVD) circuit is not used (VPOC2 = 1) and an external reset circuit is not used or when a reset is not effected until V_{DD} = 2.7 V.

2. These values indicate setting values of option bytes.

3. If the power supply drops below V_{PDR} and a POR reset is effected, this specification is also applied when the power supply is recovered without dropping to 0 V.

<R> **36.8 RAM Data Retention Characteristics**

(T_A = -40 to +150°C, V_{SS} = EV_{SS0} = EV_{SS1} = 0 V)

Parameter	Symbol	Conditions	MIN.	TYP.	MAX.	Unit
Data retention supply voltage	V_{DDDR}		1.47[Note]		5.5	V

<R> **Note** This depends on the POR detection voltage. For a falling voltage, data in RAM are retained until the voltage reaches the level that triggers a POR reset but not once it reaches the level at which a POR reset is generated.

<R>

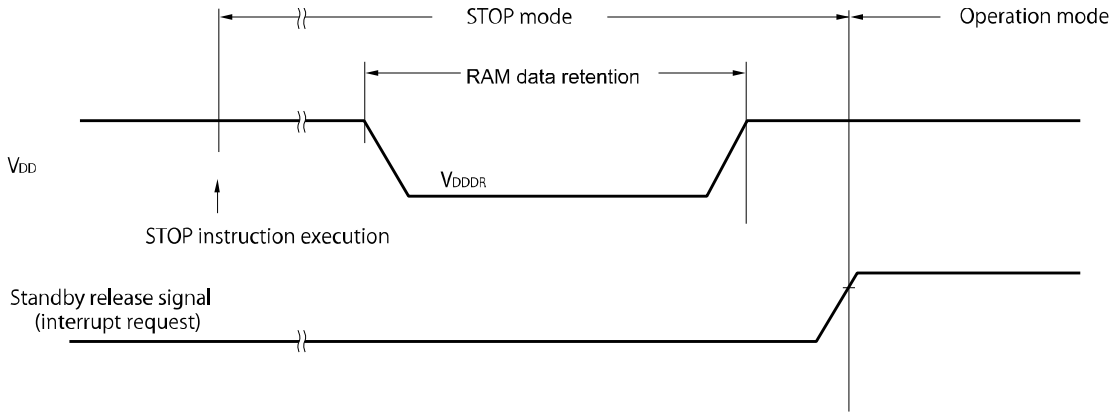

36.9 Flash Memory Programming Characteristics

(T_A = -40 to +150°C, 2.7 V ≤ EV_{DD0} = EV_{DD1} = V_{DD} ≤ 5.5 V, V_{SS} = EV_{SS0} = EV_{SS1} = 0 V)

Parameter	Symbol	Conditions	MIN.	TYP.	MAX.	Unit
System clock frequency	f_{CLK}		1		24	MHz
<R> Number of code flash rewrites Notes 1, 2, 3	C_{erwr}	Retained for 20 years T_A = +85°C Note 4	1,000			Times
<R> Number of data flash rewrites Notes 1, 2, 3		Retained for 20 years T_A = +85°C Note 4	10,000			
<R>		Retained for 5 years T_A = +85°C Note 4	100,000			
Erase time	T_{erasa}	Block erase	5			ms
Write time	T_{wrwa}	1 word write	10			μs

<R> **Notes 1.** 1 erase + 1 write after the erase is regarded as 1 rewrite. The starting point of the retaining years are after the erase.

2. When using flash memory programmer and Renesas Electronics self programming library

3. These are the characteristics of the flash memory and the results obtained from reliability testing by Renesas Electronics Corporation.

4. The specified data retention time is given under the condition that the average temperature (T_A) is 85°C or below.

CHAPTER 37 PACKAGE DRAWING

37.1 20-pin products

20-PIN PLASTIC SSOP (7.62 mm (300))

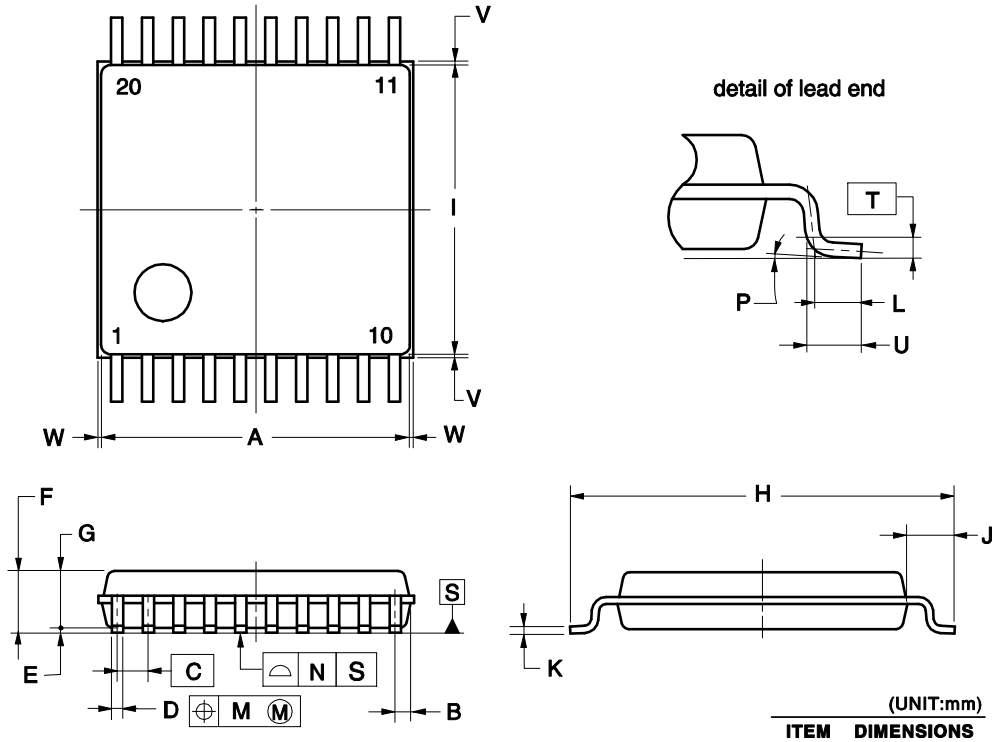

(UNIT:mm)

ITEM	DIMENSIONS
A	6.50±0.10
B	0.325
C	0.65 (T.P.)
D	$0.22^{+0.10}_{-0.05}$
E	0.10±0.05
F	1.30±0.10
G	1.20
H	8.10±0.20
I	6.10±0.10
J	1.00±0.20
K	$0.15^{+0.05}_{-0.01}$
L	0.50
M	0.13
N	0.10
P	$3^{\circ}{}^{+5^{\circ}}_{-3^{\circ}}$
T	0.25(T.P)
U	0.60±0.15
V	0.25 MAX.
W	0.15 MAX.

P20MC-65-CAA-1

NOTE

Each lead centerline is located within 0.13 mm of its true position (T.P.) at maximum material condition.

©2010 Renesas Electronics Corporation. All rights reserved.

37.2 30-pin products

JEITA Package Code	RENESAS Code	Previous Code	MASS (TYP.) [g]
P-LSSOP30-6.1x9.7-0.65	PLSP0030JB-A	P30MC-65-CAB-2	0.18

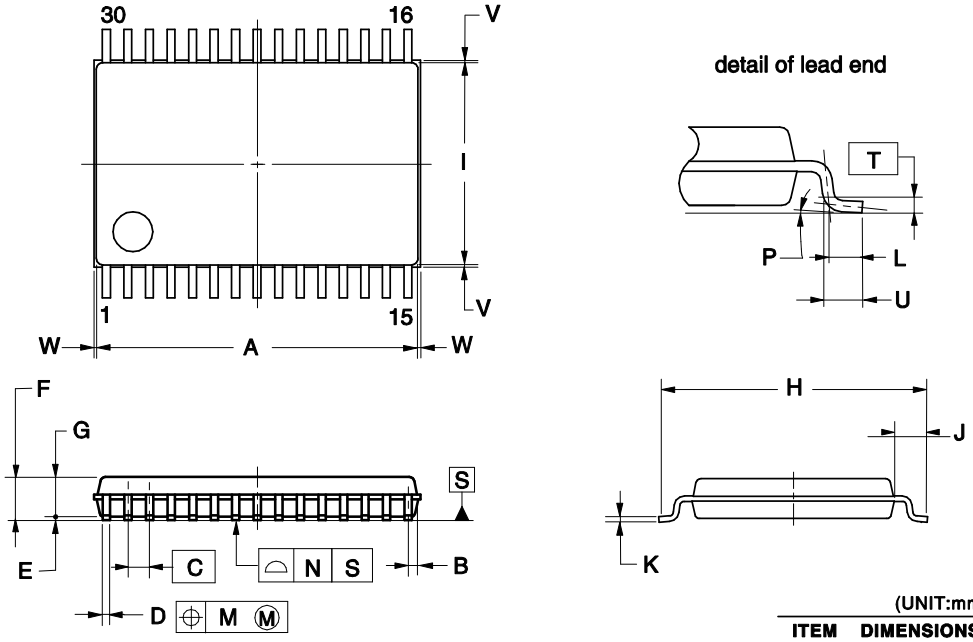

(UNIT:mm)

ITEM	DIMENSIONS
A	9.70±0.10
B	0.30
C	0.65 (T.P.)
D	$0.22^{+0.10}_{-0.05}$
E	0.10±0.05
F	1.30±0.10
G	1.20
H	8.10±0.20
I	6.10±0.10
J	1.00±0.20
K	$0.15^{+0.05}_{-0.01}$
L	0.50
M	0.13
N	0.10
P	$3°^{+5°}_{-3°}$
T	0.25(T.P.)
U	0.60±0.15
V	0.25 MAX.
W	0.15 MAX.

NOTE

Each lead centerline is located within 0.13 mm of its true position (T.P.) at maximum material condition .

©2012 Renesas Electronics Corporation. All rights reserved.

37.3 32-pin products

JEITA Package code	RENESAS code	Previous code	MASS(TYP.)[g]
P-HVQFN32-5x5-0.50	PVQN0032KD-A	P32K9-50A-BAH	0.058

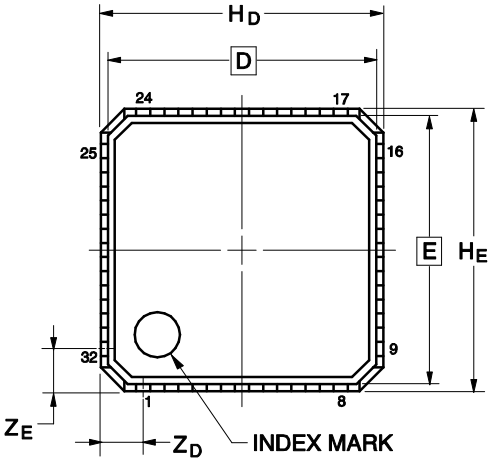

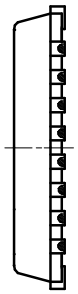

DETAIL OF Ⓐ PART

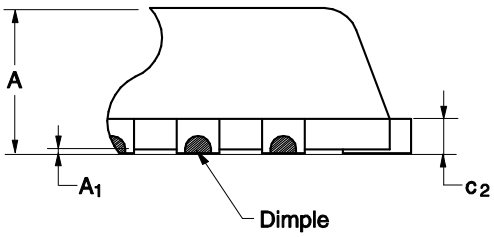

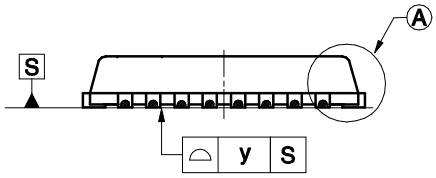

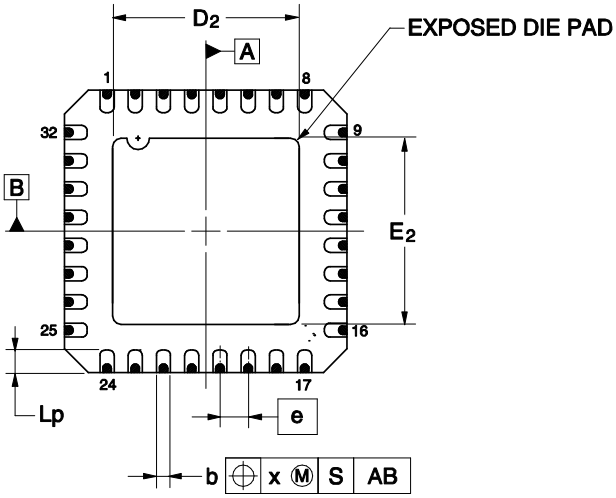

Referance Symbol	Dimension in Millimeters		
	Min	Nom	Max
D	—	4.75	—
E	—	4.75	—
A	—	—	0.90
A_1	0.00	—	—
b	0.20	0.25	0.30
e	—	0.50	—
Lp	0.30	0.40	0.50
x	—	—	0.10
y	—	—	0.05
H_D	4.95	5.00	5.05
H_E	4.95	5.00	5.05
Z_D	—	0.75	—
Z_E	—	0.75	—
c_2	0.19	0.20	0.21
D_2	—	3.30	—
E_2	—	3.30	—

37.4 48-pin products

37.4.1 48-pin LQFP

JEITA Package Code	RENESAS Code	Previous Code	MASS (TYP.) [g]
P-LFQFP48-7x7-0.50	PLQP0048KF-A	P48GA-50-8EU-1	0.16

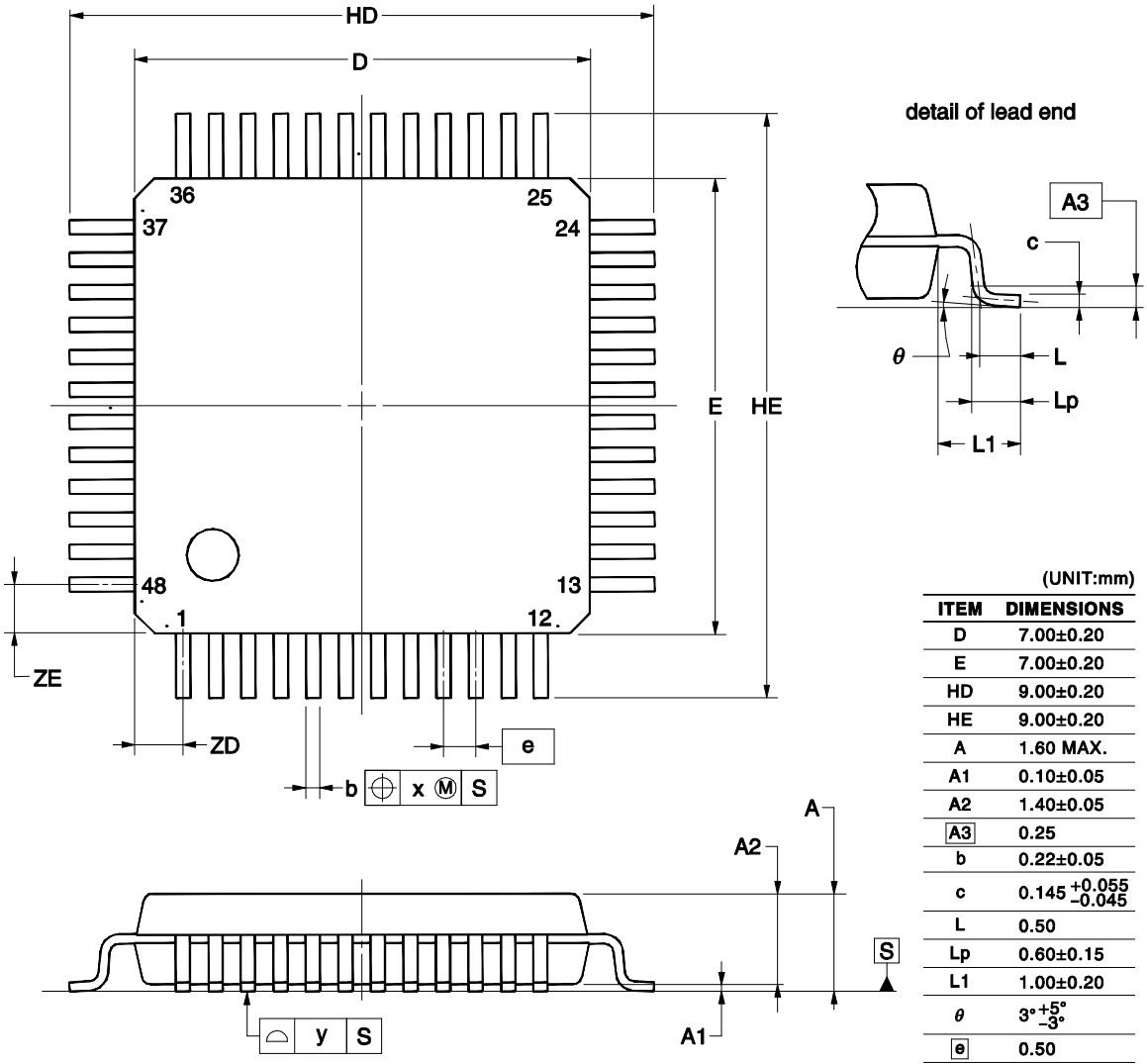

(UNIT:mm)

ITEM	DIMENSIONS
D	7.00±0.20
E	7.00±0.20
HD	9.00±0.20
HE	9.00±0.20
A	1.60 MAX.
A1	0.10±0.05
A2	1.40±0.05
A3	0.25
b	0.22±0.05
c	$0.145^{+0.055}_{-0.045}$
L	0.50
Lp	0.60±0.15
L1	1.00±0.20
θ	$3°^{+5°}_{-3°}$
e	0.50
x	0.08
y	0.08
ZD	0.75
ZE	0.75

NOTE
Each lead centerline is located within 0.08 mm of its true position at maximum material condition.

©2012 Renesas Electronics Corporation. All rights reserved.

37.4.2 48-pin VQFN

JEITA Package code	RENESAS code	Previous code	MASS(TYP.)[g]
P-HVQFN48-7x7-0.50	PVQN0048KG-A	P48K9-50A-BAJ	0.13

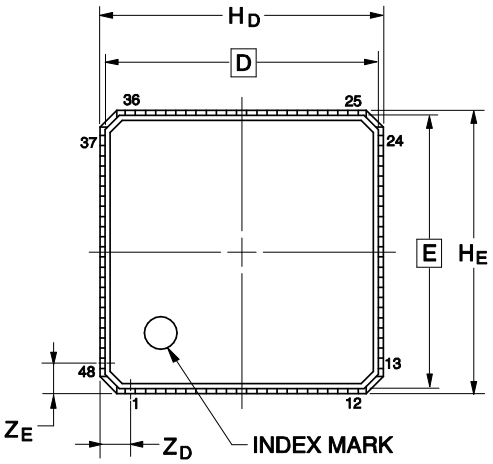

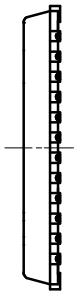

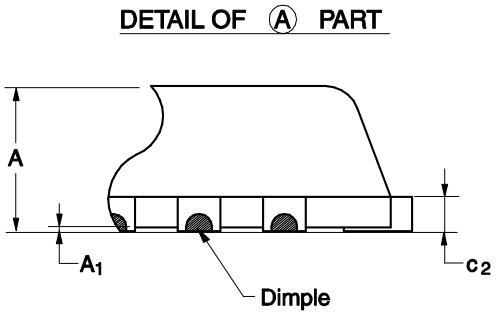

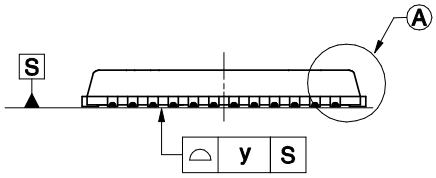

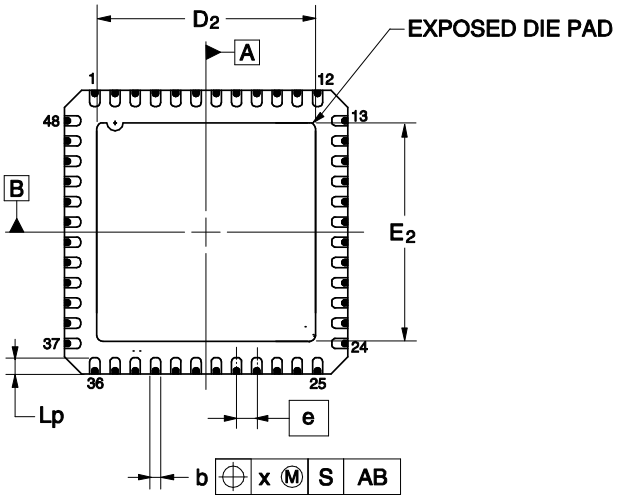

Referance Symbol	Dimension in Millimeters		
	Min	Nom	Max
D	—	6.75	—
E	—	6.75	—
A	—	—	0.90
A_1	0.00	—	—
b	0.20	0.25	0.30
e	—	0.50	—
Lp	0.30	0.40	0.50
x	—	—	0.10
y	—	—	0.05
H_D	6.95	7.00	7.05
H_E	6.95	7.00	7.05
Z_D	—	0.75	—
Z_E	—	0.75	—
c_2	0.19	0.20	0.21
D_2	—	5.40	—
E_2	—	5.40	—

37.5 64-pin products

JEITA Package Code	RENESAS Code	Previous Code	MASS (TYP.) [g]
P-LFQFP64-10x10-0.50	PLQP0064KF-A	P64GB-50-UEU-2	0.35

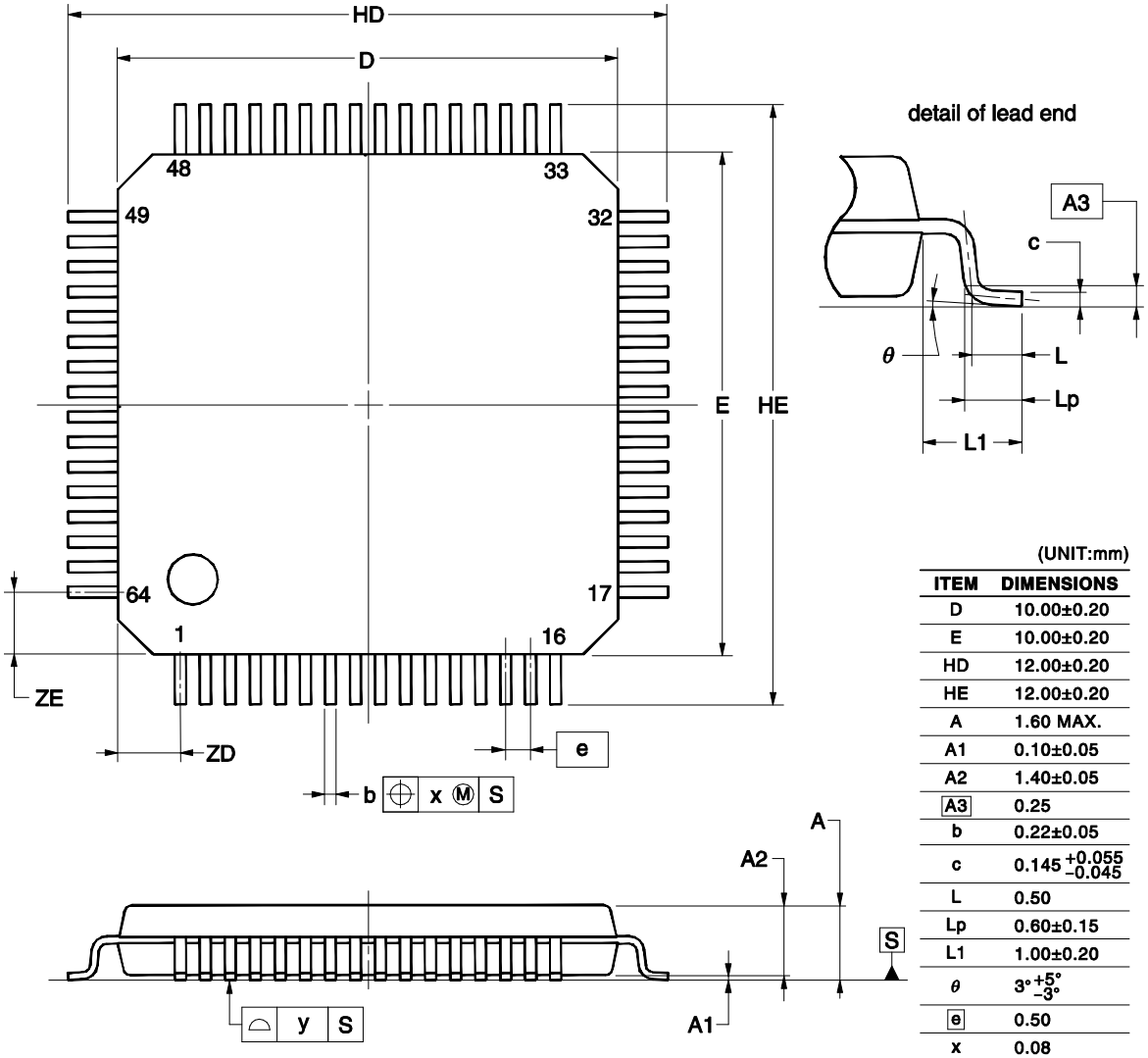

(UNIT:mm)

ITEM	DIMENSIONS
D	10.00±0.20
E	10.00±0.20
HD	12.00±0.20
HE	12.00±0.20
A	1.60 MAX.
A1	0.10±0.05
A2	1.40±0.05
A3	0.25
b	0.22±0.05
c	$0.145^{+0.055}_{-0.045}$
L	0.50
Lp	0.60±0.15
L1	1.00±0.20
θ	$3^{\circ}{}^{+5^{\circ}}_{-3^{\circ}}$
e	0.50
x	0.08
y	0.08
ZD	1.25
ZE	1.25

NOTE
Each lead centerline is located within 0.08 mm of its true position at maximum material condition.

©2012 Renesas Electronics Corporation. All rights reserved.

37.6 80-pin products

JEITA Package Code	RENESAS Code	Previous Code	MASS (TYP.) [g]
P-LFQFP80-12x12-0.50	PLQP0080KE-A	P80GK-50-8EU-2	0.53

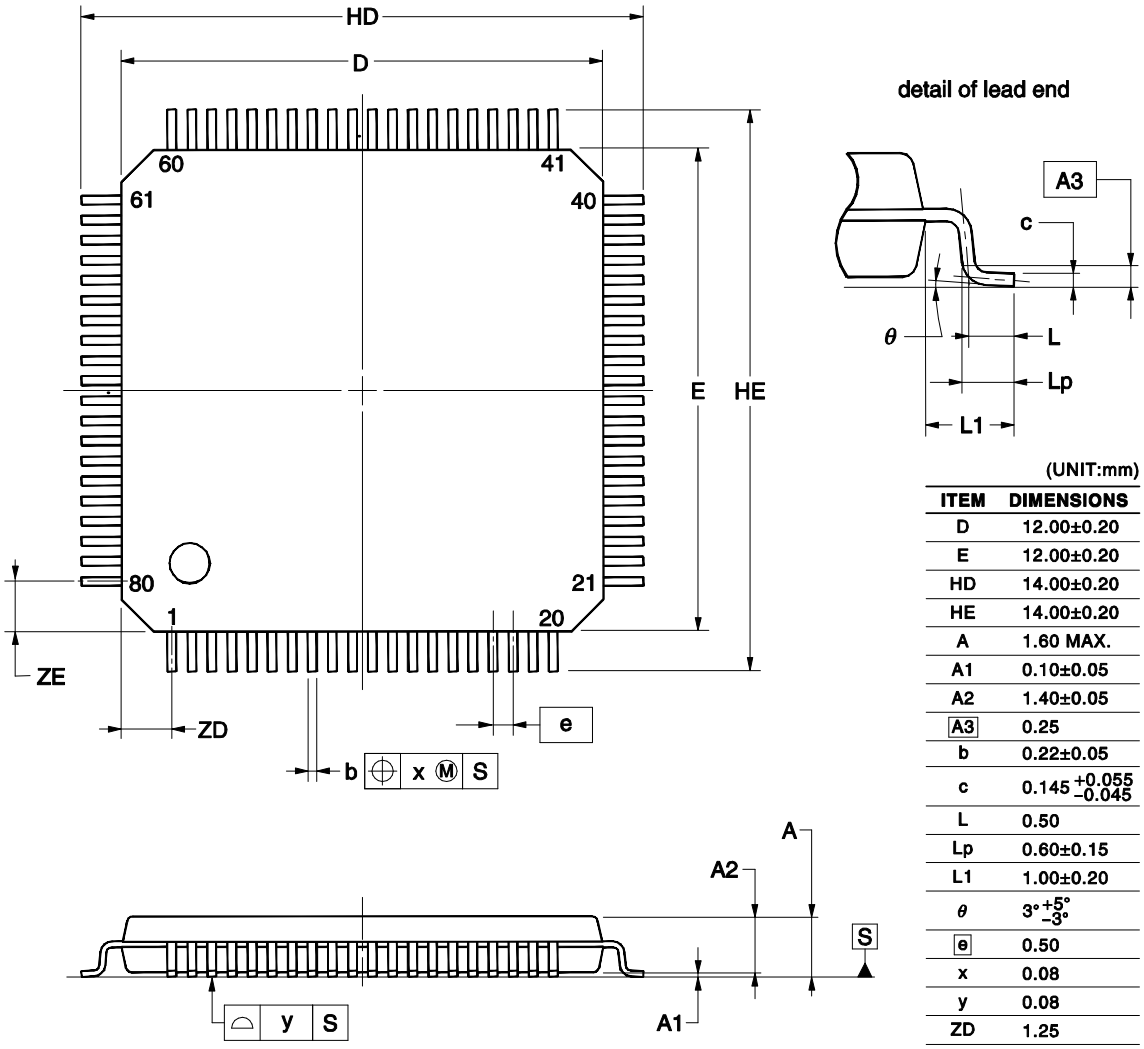

(UNIT:mm)

ITEM	DIMENSIONS
D	12.00±0.20
E	12.00±0.20
HD	14.00±0.20
HE	14.00±0.20
A	1.60 MAX.
A1	0.10±0.05
A2	1.40±0.05
A3	0.25
b	0.22±0.05
c	$0.145^{+0.055}_{-0.045}$
L	0.50
Lp	0.60±0.15
L1	1.00±0.20
θ	$3°^{+5°}_{-3°}$
e	0.50
x	0.08
y	0.08
ZD	1.25
ZE	1.25

NOTE
Each lead centerline is located within 0.08 mm of its true position at maximum material condition.

©2012 Renesas Electronics Corporation. All rights reserved.

37.7 100-pin products

JEITA Package Code	RENESAS Code	Previous Code	MASS (TYP.) [g]
P-LFQFP100-14x14-0.50	PLQP0100KE-A	P100GC-50-GBR-1	0.69

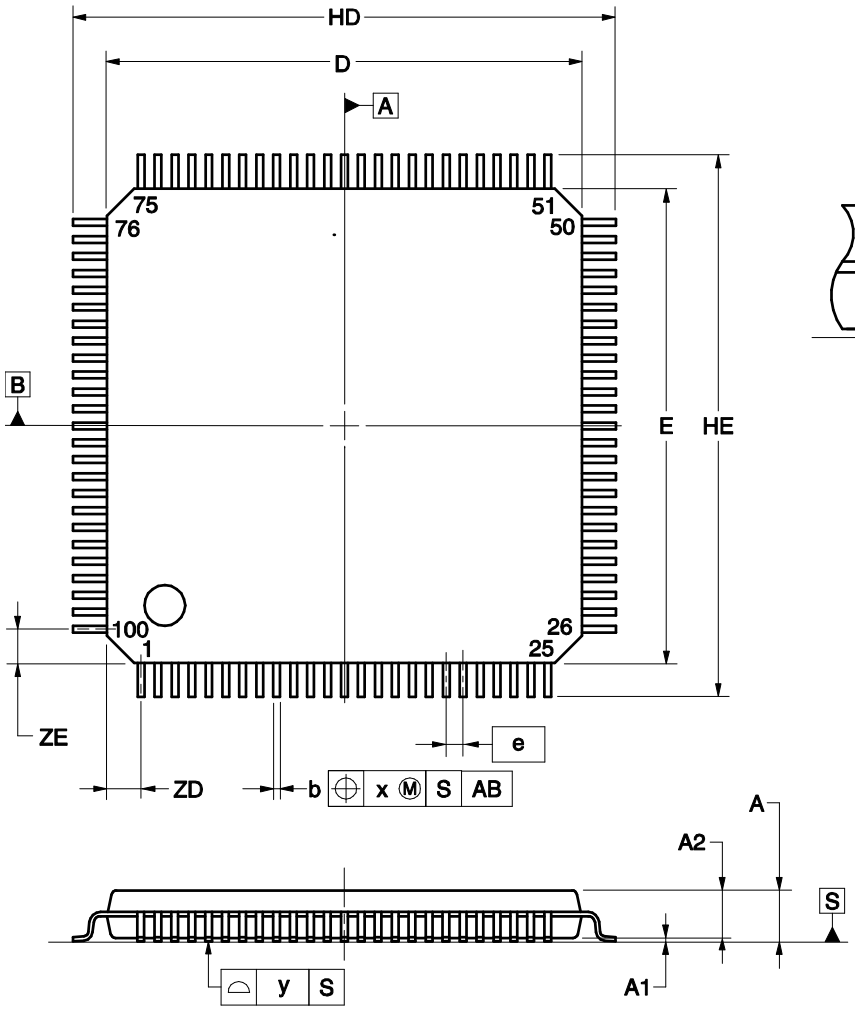

detail of lead end

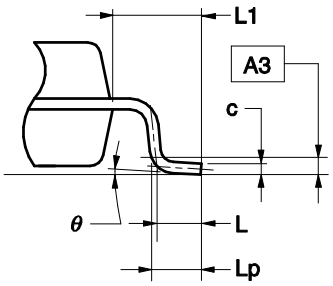

(UNIT:mm)

ITEM	DIMENSIONS
D	14.00±0.20
E	14.00±0.20
HD	16.00±0.20
HE	16.00±0.20
A	1.60 MAX.
A1	0.10±0.05
A2	1.40±0.05
A3	0.25
b	0.22±0.05
c	$0.145^{+0.055}_{-0.045}$
L	0.50
Lp	0.60±0.15
L1	1.00±0.20
θ	$3°^{+5°}_{-3°}$
e	0.50
x	0.08
y	0.08
ZD	1.00
ZE	1.00

©2012 Renesas Electronics Corporation. All rights reserved.

APPENDIX A REVISION HISTORY

Major Revisions in This Edition

(1/11)

Page	Description	Classification
CHAPTER 1 OVERVIEW		
p.1	1.1 Features, corrected description of DTC and Safety functions	(a)
p.10	Table 1-6 RL78/F13 (LIN incorporated) Functions List (2/2), corrected Note 5	(a)
p.15	Figure 1-5 Block Diagram, added of ELC and CAN, corrected of PORT12 and TAU1	(a)
p.16	Figure 1-6 Block Diagram, added of ELC, corrected of TAU1	(a)
p.18	Figure 1-8 Block Diagram, corrected of TAU1 and PORT4, 10-bit ADC	(a)
p.19	Figure 1-9 Block Diagram, deleted PORT9	(a)
p.20	Figure 1-10 Block Diagram, corrected of TAU1	(a)
p.23	Figure 1-13 Block Diagram, corrected of TAU1 and PORT4, 10-bit ADC	(a)
p.25	Figure 1-15 Block Diagram, corrected of TAU1 and External INT(12ch)	(a)
p.30	Figure 1-20 Block Diagram, deleted STOPST	(a)
p.31	Figure 1-21 Block Diagram, deleted STOPST	(a)
p.32	Figure 1-22 Block Diagram, added of TRJ, corrected of PLL	(a)
CHAPTER 2 PIN FUNCTIONS		
p.66	Table 2-4 List of RL78/F13 (LIN incorporated) Pins Other than Port Pins (1/4), corrected Conditions on TI11 and TI13 Function	(a)
p.68	Table 2-4 List of RL78/F13 (LIN incorporated) Pins Other than Port Pins (3/4), corrected Conditions on SSI10 48-pin	(a)
p.74	2.2.4 P40 to P47 (Port 4) and Table 2-5 Relationships Between P40/TOOL0 and Operation Mode After Reset Release, corrected Caution, added description	(a)
p.75	2.2.5 P50 to P57 (Port 5), added description of (g) TI11, TI13, TI15, TI17, corrected description of (h) TO11, TO13, TO15, TO17	(a)
p.78	2.2.7 P70 to P77 (Port 7), corrected description of (2) Control mode (m) TO15, TO17	(a)
p.79	2.2.10 P100 to P107 (Port 10), corrected description of (2) Control mode (b) LTXD1, (c) LRXD1	(a)
p.84	Table 2-6 Connection of Unused Pins (100-Pin Products of RL78/F14) (1/3), corrected Conditions on 40/TOOL0	(a)
p.87	Table 2-7 Connection of Unused Pins (80-Pin Products of RL78/F13 (CAN and LIN incorporated)) (1/3), corrected Conditions on P40/TOOL0	(a)

Remark: "Classification" in the above table classifies revisions as follows.
(a): Error correction, (b): Addition/change of specifications, (c): Addition/change of description or note,
(d): Addition/change of package, part number, or management division, (e): Addition/change of related documents

(2/11)

Page	Description	Classification
CHAPTER 3 CPU ARCHITECTURE		
p.91 to 94, 96, 97, 99 to 104, 106, 107, 109 to 111	Figure 3-1 to 3-17 Memory Map, corrected Note 4	(a)
p.103	Figure 3-11 Memory Map (R5F10AmF (m = G, L, M), R5F10BmF (m = A, B, G, L, M)), corrected of Reserved address and Code flash memory address	(a)
p.147	Figure 3-41 Configuration of ES and CS Registers, corrected of CS bit 2 to 0	(a)
p.152	Table 3-5. SFR List (4/4), corrected Table header.	(a)
p.162, 163	Table 3-6 Extended SFR (2nd SFR) List (9/32), corrected description of Special Function Register (2nd SFR) Name at F02A1H address and After reset at F02C7H address, added of Note 3	(a)
p.185	Table 3-6 Extended SFR (2nd SFR) List (31/32), corrected description of Special Function Register (2nd SFR) Name at F06C9H address	(a)
CHAPTER 4 PORT FUNCTIONS		
p.208	4.2.1 Port 0, corrected description of example	(a)
p.215	Figure 4-5 Block Diagram of P10, added a line between POM10 and NAND circuit	(a)
p.216	Figure 4-6 Block Diagram of P11, added a line between POM11 and NAND circuit	(a)
p.217	Figure 4-7 Block Diagram of P12, added a line between POM12 and NAND circuit	(a)
p.218	Figure 4-8 Block Diagram of P13, added a line between POM13 and NAND circuit	(a)
p.219	Figure 4-9 Block Diagram of P14, added a line between POM14 and NAND circuit	(a)
p.220	Figure 4-10 Block Diagram of P15, added a line between POM15 and NAND circuit	(a)
p.221	Figure 4-11 Block Diagram of P16, added a line between POM16 and NAND circuit	(a)
p.222	Figure 4-12 Block Diagram of P17, added a line between POM17 and NAND circuit	(a)
p.251	Figure 4-33 Block Diagram of P60, added a line between POM60 and NAND circuit	(a)
p.252	Figure 4-34 Block Diagram of P61, added a line between POM61 and NAND circuit	(a)
p.253	Figure 4-35 Block Diagram of P62, added a line between POM62 and NAND circuit	(a)
p.254	Figure 4-36 Block Diagram of P63, added a line between POM63 and NAND circuit	(a)
p.260	Table 4-11 Settings of Registers When Using Port 7 (1/2), corrected Conditions on P74	(a)
p.262	Table 4-12 Setting Functions of P70/ANI26 to P74/ANI30 Pins, corrected Table header	(a)
p.263	Figure 4-41 Block Diagram of P70, corrected description of Alternate function, added lines and corrected of Delay/postpone of PMC7	(a)
p.265	Figure 4-42 Block Diagram of P71, added lines and corrected of Delay/postpone of PMC7	(a)
p.267	Figure 4-43 Block Diagram of P72, corrected description of Alternate function, added lines and corrected of Delay/postpone of PMC7	(a)
p.268	Figure 4-44 Block Diagram of P73, added of a line and corrected of Delay/postpone of PMC7	(a)
p.269	Figure 4-45 Block Diagram of P74, corrected description of Alternate function, added of a line and corrected of Delay/postpone of PMC7	(a)
p.274	Table 4-14 Setting Functions of P80/ANI2/ANO0 Pin, corrected Conditions on Functions of ANO0/ANI2/P80 Pin at ADPC Register Digital I/O	(a)
p.228, 275 to 282, 285, 288	Figure 4-16, 4-49 to 4-56, 4-57, 4-58 Block Diagram, corrected NAND to Schmitt NAND circuit	(a)
p.280	Figure 4-54 Block Diagram of P85, corrected of Reference voltage input for comparator	(a)
p.286	4.2.10 Port 10, corrected description of Reset signal	(a)
p.293	Figure 4-61 Block Diagram of P120, added lines and corrected of Delay/postpone of PMC12	(a)

Remark: “Classification” in the above table classifies revisions as follows.

(a): Error correction, (b): Addition/change of specifications, (c): Addition/change of description or note,

(d): Addition/change of package, part number, or management division, (e): Addition/change of related documents

(3/11)

Page	Description	Classification
p.296	Figure 4-64 Block Diagram of P125, added of a line and corrected of Delay/postpone of PMC12	(a)
p.300	Figure 4-67 Block Diagram of P137, added NOT and deleted AND circuit	(a)
p.330	4.3.7 A/D port configuration register (ADPC), corrected Caution 2	(a)
p.337	4.3.13 Peripheral I/O redirection register 4 (PIOR4), added description of bit 7	(c)
p.343	Figure 4-91 Format of Port Output Slew Rate Register (PSRSEL), corrected Caution PSR12 and PSR10	(a)
p.350	4.4 Connecting to external device with different potential (3 V), corrected description of Connecting to external device with different potential (3 V)	(a)
p.352	Table 4-29 Settings of Port Mode Register and Output Latch When Using Alternate Function (1/8), corrected Conditions on P00 INTP9	(a)
p.352 to 359, 361, 362	Table 4-29 Settings of Port Mode Register and Output Latch When Using Alternate Function, added Remark 1 , deleted Remark 3 description	(c)
p.354	Table 4-29 Settings of Port Mode Register and Output Latch When Using Alternate Function (3/8), corrected Conditions on P32 INTP16	(a)
p.355	Table 4-29 Settings of Port Mode Register and Output Latch When Using Alternate Function (3/8), corrected Conditions on P54 SSI10	(a)
p.364	4.6.2 Notes on specifying the pin settings, added Caution 1, 2	(c)
CHAPTER 5 CLOCK GENERATOR		
p.367	(4) Low-speed on-chip oscillator (Low-speed OCO), corrected description of (4) Low-speed on-chip oscillator (Low-speed OCO), corrected Remark	(a)
p.369	Figure 5-1 Block Diagram of Clock Generator, corrected description of System clock control register and Clock monitor	(a)
p.373	Figure 5-3 Format of Clock Operation Mode Control Register (CMC), corrected Conditions on CKSEL and CMC register	(a)
p.377	5.3.3 Clock Operation Status Control Register (CSC), corrected Caution 6	(c)
p.388	Figure 5-14 Format of Operation Speed Mode Control Register (OSMC), corrected Note	(a)
p.390	5.3.9 High-Speed On-Chip Oscillator Trimming Register (HIOTRM), added Remark	(c)
p.393	Figure 5-19 Format of Clock Select Register (CKSEL), corrected description of TRD_CKSEL, corrected Note 1	(a)
p.395	Figure 5-20 Format of PLL Control Register (PLLCTL), added Caution 14	(c)
p.397	Figure 5-22 Format of fMP Clock Division Register (MDIV), added of fMP clock division control	(a)
p.398	5.4.1 X1 Oscillator, 5.4.2 XT1 Oscillator, corrected description of X1 Oscillator and XT1 Oscillator	(a)
p.408	5.6.3 Example of Setting XT1 Oscillator, corrected description of order 1	(a)
p.412	Figure 5-27 CPU Clock Status Transition Diagram, corrected Conditions on VDD	(a)
p.416, 417	Table 5-3 Changing CPU Clock (1/7), Table 5-3. Changing CPU Clock (2/7), added description of Processing after Change	(c)
p.425	5.6.9 Conditions Before Clock Oscillation Is Stopped, added description of Conditions Before Clock Oscillation Is Stopped	(c)

Remark: “Classification” in the above table classifies revisions as follows.

(a): Error correction, (b): Addition/change of specifications, (c): Addition/change of description or note,

(d): Addition/change of package, part number, or management division, (e): Addition/change of related documents

(4/11)

Page	Description	Classification
CHAPTER 6 TIMER ARRAY UNIT		
p.429	6.1.1 Independent channel operation function, corrected description of (4)Divider function and Figure Timer input and Timer output	(a)
p.441	6.2.2 Timer data register mn (TDRmn), corrected description of Timer data register mn (TDRmn)	(a)
p.448	Figure 6-13 Format of Timer Mode Register mn (TMRmn) (1/4), corrected Conditions on CCSmn bit	(a)
p.451	Figure 6-13 Format of Timer Mode Register mn (TMRmn) (4/4), corrected description of One-count mode (1, 0, 0)	(a)
p.453	6.3.4 Timer status register mn (TSRmn), corrected description of Timer status register mn (TSRmn)	(a)
p.454	6.3.5 Timer channel enable status register m (TEm), corrected description of Timer channel enables status register m (TEm)	(a)
p.456	Figure 6-17 Format of Timer Channel Stop Register m (TTm), corrected Conditions on TTHm3 and TTHm1 and TTHmn bit	(a)
p.463	Figure 6-24 Format of Timer Output Mode Register m (TOMm), corrected Conditions on TOMmn bit	(a)
p.465, 466	Figure 6-25 Format of Noise Filter Enable Register 1, 2 (NFEN1, NFEN2) (1/2), Figure 6-25. Format of Noise Filter Enable Register 1, 2 (NFEN1, NFEN2) (2/2), corrected description of Noise Filter Enable Register	(a)
p.471	6.4.1 Basic rules of simultaneous channel operation function, corrected description of Basic rules of simultaneous channel operation function (13), added of (14)	(a)
p.477 to 481	6.5.3 Operation of counter, corrected description of operation in each mode	(a)
p.477, 478, 480, 481	Figure 6-29, 6-30, 6-32, 6-33, corrected of Figure title	(a)
p.479	Figure 6-31 Operation Timing (In Capture Mode: Input Pulse Interval Measurement), corrected timing of When MDmn0=1 setting	(a)
p.481	Figure 6-33 Operation Timing (In Capture & One-count Mode: High-level Width Measurement), corrected description of TCRmn register	(a)
p.482	6.6.1 TOmn pin output circuit configuration, corrected description of TOmn pin output circuit configuration	(a)
p.486	6.6.3 Cautions on Channel Output Operation, (2) Default level of TOmn pin and output level after timer operation start, (b) When operation starts with slave channel output mode (TOMmp = 1) setting (PWM output)), corrected description of Figure 6-37, corrected Remark 1, 2	(a)
p.489	Figure 6-40 Example of TO0n Bit Collective Manipulation, corrected description of Data to be written and TOE0 register	(a)
p.490	6.6.5 Timer Interrupt and TOmn Pin Output at Operation Start, corrected description of Figure number	(a)
p.493	Figure 6-45 Example of Set Contents of Registers During Operation as Interval Timer/Square Wave Output (1/2), corrected description of Setting of SPLITmn bit (channels 1, 3)	(a)
p.497	Figure 6-47 Block Diagram of Operation as External Event Counter, corrected description of TNFENmn register	(a)
p.501	Figure 6-50 Operation Procedure When External Event Counter Function Is Used, corrected description of Channel default setting and During operation	(a)
p.502	6.7.3 Operation as frequency divider, corrected description of Operation as frequency divider	(a)
p.502	Figure 6-51 Block Diagram of Operation as Frequency Divider, corrected of Operation as Frequency Divider	(a)
p.503	Figure 6-52 Example of Basic Timing of Operation as Frequency Divider (MDmn0 = 1), corrected description of register name, corrected Remark	(a)
p.504	Figure 6-53 Example of Set Contents of Registers During Operation as Frequency Divider, corrected description of register and bit name	(a)
p.505	Figure 6-54 Operation Procedure When Frequency Divider Function Is Used, corrected description of Software Operation and Hardware Status	(a)

Remark: "Classification" in the above table classifies revisions as follows.

(a): Error correction, (b): Addition/change of specifications, (c): Addition/change of description or note,

(d): Addition/change of package, part number, or management division, (e): Addition/change of related documents

(5/11)

Page	Description	Classification
p.506	Figure 6-55 Block Diagram of Operation as Input Pulse Interval Measurement, corrected description of TNFENmn register	(a)
p.510	Figure 6-58 Operation Procedure When Input Pulse Interval Measurement Function Is Used, corrected description of Channel default setting and During operation	(a)
p.512	Figure 6-59 Block Diagram of Operation as Input Signal High-/Low-Level Width Measurement, corrected description of TNFENmn register	(a)
p.515	Figure 6-62 Operation Procedure When Input Signal High-/Low-Level Width Measurement Function Is Used, corrected description of Channel default setting and During operation	(a)
p.516	Figure 6-63 Block Diagram of Operation as Delay Counter, corrected description of TNFENmn register	(a)
p.518	Figure 6-65 Example of Set Contents of Registers to Delay Counter (1/2), (a) Timer mode register mn (TMRmn), corrected description of Setting of SPLITmn bit (channels 1, 3)	(a)
p.520	Figure 6-66 Operation Procedure When Delay Counter Function Is Used, corrected description of Channel default setting and During operation	(a)
p.522	Figure 6-67 Block Diagram of Operation as One-Shot Pulse Output Function, corrected description of TNFENmn register	(a)
p.527	Figure 6-71 Operation Procedure of One-Shot Pulse Output Function (1/2), corrected description of Channel default setting	(a)
p.528	Figure 6-71 Operation Procedure of One-Shot Pulse Output Function (2/2), corrected description of During operation	(a)
p.545	6.9.1 Cautions When Using Timer output, corrected description of Cautions When Using Timer output (1)	(a)
CHAPTER 7 TIMER RJ		
p.548	Table 7-3 Timer RJ Register Configuration, corrected Access Size of Timer RJ Mode Register 0 and Timer RJ Event Pin Select Register 0	(a)
p.550	Figure 7-3 Format of Operation Speed Mode Control Register (OSMC), corrected description of WUTMMCK0 bit	(a)
p.552	7.3.5 Timer RJ Control Register 0 (TRJCR0), added description of TRJCR0 register	(c)
p.554	7.3.6 Timer RJ I/O Control Register 0 (TRJIOC0), added description of TRJIOC0 register	(c)
p.556	7.3.7 Timer RJ Mode Register 0 (TRJMR0), added description of TRJMR0 register	(c)
p.558	7.3.8 Timer RJ Event Pin Select Register 0 (TRJISR0), added description of TRJISR0 register	(c)
p.561	Figure 7-12 Operation Example in Timer Mode, corrected description of TRJIF0	(a)
p.562	Figure 7-13 Operation Example in Pulse Output Mode, corrected description of TRJIF0	(a)
p.563	Figure 7-14 Operation Example 1 in Event Counter Mode, corrected description of TRJIF0	(a)
p.565	Figure 7-16 Operation Example in Pulse Width Measurement Mode, corrected description of TRJIF0	(a)
p.566	Figure 7-17 Operation Example in Pulse Period Measurement Mode, corrected description of TRJIF0	(a)
p.567	Table 7-7 TRJIO0 Pin Setting, corrected description of Port Mode Register 4 and TRJIOC0 Register, deleted description of Note	(a)
CHAPTER 8 TIMER RD		
p.574	Figure 8-2 Format of Peripheral Enable Register 1 (PER1), corrected description of Caution 3	(a)
p.575	Figure 8-3 Format of Clock Select Register (CKSEL), corrected description of Note 1	(a)
p.592	Figure 8-19 Format of Timer RD Control Register i (TRDCRi) (i = 0, 1) [Complementary PWM Mode], corrected description of TRDCR0 register	(a)
p.602	Figure 8-27 Format of Timer RD Interrupt Enable Register i (TRDIERi) (i = 0 or 1), corrected description of OVIE, IMIED, IMIEC, IMIEB and IMIEA bit	(a)
p.604	Figure 8-30 Format of Timer RD Counter 0 (TRD0) [Reset Synchronous PWM Mode and PWM3 Mode], corrected description of TRD0 register	(a)

Remark: "Classification" in the above table classifies revisions as follows.

(a): Error correction, (b): Addition/change of specifications, (c): Addition/change of description or note,

(d): Addition/change of package, part number, or management division, (e): Addition/change of related documents

(6/11)

Page	Description	Classification
p.605	Figure 8-31 Format of Timer RD Counter 0 (TRD0) [Complementary PWM Mode (TRD0)], Figure 8-32 Format of Timer RD Counter 1 (TRD1) [Complementary PWM Mode (TRD1)], corrected description of TRD0 and TRD1 register	(a)
p.619	Figure 8-40 Count Source Block Diagram, corrected description of Note 1 and Remark	(a)
p.629	Table 8-14 Input Capture Function Specifications, corrected description of Count sources	(a)
p.654	8.5.4 Input Capture Function, corrected description of TSTARTi bit	(a)
CHAPTER 9 REAL-TIME CLOCK		
p.663	Figure 9-2 Format of Peripheral Enable Register 0 (PER0), added description of Caution 2	(a)
p.667	Figure 9-6 Format of RTC clock select register (RTCCL), corrected description of bits 5 to 2, deleted description of Caution 2	(a)
p.668	Figure 9-7 Format of Real-time Clock Control Register 0 (RTCC0), corrected description of Caution	(a)
p.670	Figure 9-8 Real-time Clock Control Register 1 (RTCC1), Description of RWAIT bit	(a)
p.674	Table 9-2 Displayed Time Digits, corrected description of 12-Hour Display	(a)
p.684	Figure 9-23. Procedure for Reading Real-time Clock, added description of Caution 1	(a)
p.686	Figure 9-24. Procedure for Writing Real-time Clock, added description of Caution 1	(a)
p.688	Figure 9-25 Alarm Setting Procedure, corrected description of Remark 1	(a)
p.691	(2) Correction example, corrected description of Figure Number	(a)
p.692	Figure 9-27 Operation when (DEV, F12, F11, F10, F9, F8, F7, F6, F5, F4, F3, F2, F1, F0) = (1, 1, 1, 1, 1, 1, 1, 1, 1, 0, 1, 1, 1, 0), corrected description of 16bit-counter	(a)
CHAPTER 10 CLOCK OUTPUT/BUZZER OUTPUT CONTROLLER		
p.694	Figure 10-1 Block Diagram of Clock Output/Buzzer Output Controller, corrected description of Output latch	(a)
p.697	Figure 10-2 Format of Clock Output Select Register 0 (CKS0), corrected description of Address	(a)
p.699	10.4.1 Operation as output pin, deleted description of procedures	(a)
CHAPTER 11 WATCHDOG TIMER		
p.701	Figure 11-1 Block Diagram of Watchdog Timer, corrected description of Interval time controller	(a)
p.703	11.4.1 Controlling operation of watchdog timer, corrected description of Caution 2	(a)
p.705	Table 11-4 Setting Window Open Period of Watchdog Timer, added description of Caution	(b)
p.706	11.4.4 Setting watchdog timer interval interrupt, corrected description of WDTINT bit	(a)
CHAPTER 12 A/D CONVERTER		
p.722	Figure 12-5 A/D Converter Sampling and A/D Conversion Timing (Example for Software Trigger Mode), corrected of timing chart	(a)
p.732	Figure 12-12, Figure 12-13 Format of Conversion Result Comparison Lower Limit Setting Register (ADLL), corrected of Caution 2	(c)
p.733	12.3.10 A/D test register (ADTES), corrected of ADTES register	(c)
p.748	Figure 12-27 Example of Hardware Trigger No-Wait Mode (Select Mode, One-Shot Conversion Mode) Operation Timing, corrected description of Hardware trigger	(a)
p.749	Figure 12-28 Example of Hardware Trigger No-Wait Mode (Scan Mode, Sequential Conversion Mode) Operation Timing, corrected description of Hardware trigger	(a)
p.750	Figure 12-29 Example of Hardware Trigger No-Wait Mode (Scan Mode, One-Shot Conversion Mode) Operation Timing, corrected description of Hardware trigger	(a)
p.752	Figure 12-31 Example of Hardware Trigger Wait Mode (Select Mode, One-Shot Conversion Mode) Operation Timing, corrected description of Hardware trigger	(a)
p.756	Figure 12-34 Setting up Software Trigger Mode, corrected description of ADRCK bit	(a)
p.757	Figure 12-35 Setting up Hardware Trigger No-Wait Mode, corrected description of ADRCK bit	(a)
p.758	Figure 12-36 Setting up Hardware Trigger Wait Mode, corrected description of ADRCK bit	(a)
p.759	Figure 12-37 Setup When Using Temperature Sensor, corrected description of ADRCK bit	(a)
p.760	Figure 12-38 Setting up Test Trigger Mode, corrected description of ADRCK bit	(a)

Remark: "Classification" in the above table classifies revisions as follows.

(a): Error correction, (b): Addition/change of specifications, (c): Addition/change of description or note,

(d): Addition/change of package, part number, or management division, (e): Addition/change of related documents

(7/11)

Page	Description	Classification
CHAPTER 13 D/A CONVERTER (RL78/F14 Only)		
p.774	Figure 13-4 Format of D/A Converter Mode Register (DAM), corrected description of Address and bit 6	(a)
p.775	Figure 13-4 Format of D/A Converter Mode Register (DAM), corrected description of bits 7 to 5 and bits 3 to 1	(a)
p.778	Figure 13-7 Format of Port Mode Register 8 (PM8), corrected description of Address	(a)
p.779	Table 13-1 Setting Functions of ANO0/ANI2/P80 Pin, corrected description of Functions of ANO0/ANI2/P80 Pin	(a)
p.781	13.4.2 Operation in Real-Time Output Mode, corrected description of D/A conversion and Caution 1	(a)
CHAPTER 14 COMPARATOR (RL78/F14 Only)		
p.785	Table 14-3 Registers to Control the Comparator, corrected description of table. Figure 14-2 Format of Peripheral Enable Register 1 (PER1), corrected description of PER1 Register	(a)
p.786	Figure 14-3 Format of Comparator Control Register (CMPCTL), corrected description of CMPCTL register	(a)
p.788	Figure 14-4 Format of Comparator I/O Select Register (CMPSEL), corrected description of Address	(a)
p.789	14.2.4 Comparator Output Monitor Register (CMPMON), corrected description of CMPMON register	(a)
p.791	Figure 14-7 Format of D/A Converter Mode Register 2 (DAM2), corrected of register name	(a)
p.792	14.2.7 Port mode register 4 (PM4), corrected description of PM4 register	(a)
p.793	14.2.8 Port mode register (PM8), corrected description of PM8 register	(a)
p.796	14.3.3 Comparator ELC Event Output, corrected description of ELC Event. 14.3.5 Stopping or Supplying Comparator Clock, corrected description of Comparator Clock	(a)
p.797	Figure 14-13 Comparator Operation Setting Flowchart (when Using the timer RD Operation Triggered by Internal Reference Voltage (D/A Converter Output), INTCMP0 Interrupt, or ELC Event), corrected description of Set interrupts and Set timer RD	(a)
CHAPTER 15 SERIAL ARRAY UNIT		
p.805	Figure 15-1 Block Diagram of Serial Array Unit 0, corrected of Figure and Caution	(a)
p.806	Figure 15-2 Block Diagram of Serial Array Unit 1 corrected of Figure	(a)
p.815, 816	Figure 15-7 Format of Serial Communication Operation Setting Register mn (SCRmn), corrected description of Address	(a)
p.819	Figure 15-9 Format of Serial Flag Clear Trigger Register mn (SIRmn), corrected description of FECTmn bit	(a)
p.824	15.3.10 Serial channel enable status register m (SEm), corrected description of lower 8 bits	(a)
p.826	Figure 15-15 Format of Serial Output Register m (SOm), corrected description of Caution	(a)
p.828	15.3.14 Serial slave select enable register m (SSEm), added description of SSEm register	(a)
p.834	Figure 15-22 Format of Port Mode Registers 1, 3 to 7, 12 (PM1, PM3 to PM7, PM12), corrected Port Mode Register	(a)
p.839	15.5 Operation of 3-Wire Serial I/O (CSI00, CSI01, CSI10, CSI11) Communication, corrected description of slave select input function	(a)
p.903	15.6 Clock Synchronous Serial Communication with SPI Function, corrected description of SPI function performs	(a)
p.941	Figure 15-102 Timing Chart of Slave Transmission (in Single-Transmission Mode) (Type 1: DAPmn = 0, CKPmn = 0), corrected description of Shift register mn	(a)
p.945	15.6.5 Slave reception, corrected description of Target channel	(a)
p.947	Figure 15-106 Example of Contents of Registers for Slave Reception of SPI Function (CSI00, CSI01, CSI10, CSI11) (2/2), corrected description of SSEm register	(a)
p.950	Figure 15-110 Timing Chart of Slave Reception (in Single-Reception Mode) (Type 1: DAPmn = 0, CKPmn = 0), corrected description of Shift register mn	(a)
p.954	Figure 15-112 Example of Contents of Registers for Slave Transmission/Reception of SPI Function (CSI00, CSI01, CSI10, CSI11) (2/2), corrected description of SSm register	(a)

Remark: "Classification" in the above table classifies revisions as follows.

(a): Error correction, (b): Addition/change of specifications, (c): Addition/change of description or note,

(d): Addition/change of package, part number, or management division, (e): Addition/change of related documents

(8/11)

Page	Description	Classification
p.958	Figure 15-116 Timing Chart of Slave Transmission/Reception (in Single-Transmission/Reception Mode) (Type 1: DAPmn = 0, CKPmn = 0), corrected description of Shift register mn	(a)
p.967	15.7.1 UART transmission, corrected description of Target channel and Remark 2	(a)
p.968	Figure 15-121 Example of Contents of Registers for UART Transmission of UART (UART0, UART1) (1/2), corrected description of SCRmn register	(a)
p.978	Figure 15-129 Example of Contents of Registers for UART Reception of UART (UART0, UART1) (1/2), corrected description of SCRmn register	(a)
p.991	Figure 15-139 Flowchart for LIN Transmission, corrected description of Operation of the hardware (reference)	(a)
p.993	Figure 15-140 Reception Operation of LIN, corrected description of Figure	(a)
p.1019	15.9.5 Calculating transfer rate, corrected description of I^2C	(a)
CHAPTER 16 SERIAL INTERFACE IICA		
p.1029	16.3 Registers Controlling Serial Interface IICA, corrected description of corrected description of number of registers	(a)
p.1067	Figure 16-29 Master Operation in Single-Master System, corrected description of Setting the PER0 register	(a)
p.1068	Figure 16-30 Master Operation in Multi-Master System (1/3), corrected description of Setting the PER0 register	(a)
p.1095	(1) Start condition ~ address ~ data, corrected image	(a)
p.1108	Figure 16-33 Example of Slave to Master Communication (When 8-Clock and 9-Clock Wait Is Selected for Master, 9-Clock Wait Is Selected for Slave) (3/3), corrected description of stop condition 8	(a)
CHAPTER 17 LIN/UART MODULE (RLIN3)		
p.1143	(24) LIN/UART Data Buffer m Register (LDBnm) (m = 1 to 8), corrected description of error detected	(a)
p.1171	(23) LIN/UART Data Buffer m Register (LDBnm) (m = 1 to 8), corrected description of error detected	(a)
p.1199	(24) UART Transmission Data Register (LUTDRn), corrected description of data set	(a)
p.1230	Figure 17-21 Target Time Area for LIN Error Detection (LIN Slave Mode), added description of response transmission start timing	(a)
p.1240	(5) SNOOZE Mode Function, added caution 5	(c)
p.1251	17.6 LIN Self-Test Mode, added description of LPRS bit	(b)
p.1253	17.6.2 Transmission in LIN Master Self-Test Mode, corrected description of LWBRn register, deleted LWBRn register of Note 1	(b)
p.1254	17.6.3 Reception in LIN Master Self-Test Mode, corrected description of LWBRn register, deleted LWBRn register of Note 1	(b)
p.1255	17.6.4 Transmission in LIN Slave Self-Test Mode, corrected description of LWBRn register, deleted LWBRn register of Note 1	(b)
p.1256	17.6.5 Reception in LIN Slave Self-Test Mode, corrected description of LWBRn register, deleted LWBRn r egister of Note 1	(b)
CHAPTER 18 CAN INTERFACE (RS-CAN LITE)		
p.1349	18.3.47 CANi Transmit/Receive FIFO Status Register k (CFSTSk) (i = 0) (k = 0), added description of Note	(c)
p.1380	18.3.75 CANi Transmit History Buffer Status Register (THLSTSi) (i = 0), added description of Note	(c)
p.1388	18.3.82 CAN RAM Test Register r (RPGACCr) (r = 0 to 127), corrected address of RPGACC42L register	(a)
p.1414	Figure 18-18 CAN Clock Control Block Diagram, corrected description of Note 2 and Remark	(a)
p.1434	18.14 Notes on the CAN Module, corrected description of TMCp register	(a)
p.1435	18.14 Notes on the CAN Module, added flowchart and Note	(c)

Remark: "Classification" in the above table classifies revisions as follows.

(a): Error correction, (b): Addition/change of specifications, (c): Addition/change of description or note,

(d): Addition/change of package, part number, or management division, (e): Addition/change of related documents

(9/11)

Page	Description	Classification
CHAPTER 19 DTC		
p.1440	Figure 19-2 Memory Map Example when DTCBAR Register is Set to FBH, added description of boundary addresses	(a)
p.1444	Table 19-5 DTC Activation Sources and DTC Vector Addresses (1/2), corrected description of Remark Group E	(a)
p.1445	Table 19-5 DTC Activation Sources and DTC Vector Addresses (2/2), corrected description of Remark Group E	(a)
p.1449	Table 19-6 Correspondences between Interrupt Sources and Bits DTCENi0 to DTCENi7, corrected description of DTCEN20 bit	(a)
p.1454	19.2.13 High-speed DTC Channel Select Register 0 (SELHS0), corrected description of SELHS0 register	(a)
p.1454	Figure 19-13 Format of High-speed DTC Channel Select Register 0 (SELHS0), corrected description of SELHS00 bit	(a)
p.1455	Figure 19-14 Format of High-speed DTC Channel Select Register 1 (SELHS1), corrected description of SELHS10 bit	(a)
p.1462	(1) Example 1 of using normal mode: Consecutively capturing A/D conversion results, corrected description of 2-byte data and DTCC12 register value	(a)
p.1466	(2) Example 2 of using repeat mode: Outputting a sine wave using the 8-bit D/A converter, corrected description of D/A conversion value	(a)
CHAPTER 20 EVENT LINK CONTROLLER (ELC) (RL78/F14 Only)		
p.1480	Table 20-3 Correspondence Between Values Set to ELSELRn (n = 00 to 25) Registers and Operation of Link Destination Peripheral Functions at Reception, corrected description of Remark	(a)
CHAPTER 21 INTERRUPT FUNCTIONS		
p.1486	Table 21-1 Interrupt Source List (2/4), corrected Interrupt Source Name and Note number	(a)
p.1487	Table 21-1 Interrupt Source List (2/4), deleted Note 6	(a)
p.1488	Table 21-1 Interrupt Source List (3/4), corrected description of Interrupt Source Trigger	(a)
p.1490	Table 21-1 Interrupt Source List (4/4), added Interrupt Source INTP12	(a)
p.1495	Table 21-2 Flags Corresponding to Interrupt Request Sources (2/4), corrected Interrupt Request Flag and Interrupt Mask Flag and Priority Specification Flag	(a)
p.1496	Table 21-2 Flags Corresponding to Interrupt Request Sources (3/4), corrected Interrupt Source and Priority Specification Flag	(a)
p.1497	Table 21-2 Flags Corresponding to Interrupt Request Sources (3/4), corrected Caution 3 and 4.	(a)
p.1498	Table 21-2 Flags Corresponding to Interrupt Request Sources (4/4), corrected Interrupt Mask Flag and Priority Specification Flag	(a)
p.1513	21.3.7 Input switch control register (ISC), corrected description of memory manipulation instruction	(a)
CHAPTER 22 KEY INTERRUPT FUNCTION		
p.1525	Table 22-1 Assignment of Key Interrupt Detection Pins, corrected Caution and Remark	(a)
CHAPTER 23 STANDBY FUNCTION		
p.1538	(2) HALT mode release, corrected description of interrupt acknowledgement	(a)
p.1539	(3) When subsystem clock or low-speed on-chip oscillator clock is used as CPU clock, added Reset signal and description	(a)
p.1541	Table 23-2 Operating Statuses in STOP Mode, corrected description of Data flash memory	(a)
p.1543	(2) STOP mode release, corrected description of interrupt acknowledgement	(a)
p.1546	23.3.3 SNOOZE mode, corrected description of user option byte address	(a)
CHAPTER 24 RESET FUNCTION		
p.1553	Figure 24-3 Timing of Reset by Watchdog Timer Overflow, Execution of Illegal Instruction, Clock Monitor, or Illegal-Memory Access, corrected Notes and Remark	(a)
p.1560	Table 24-2 States of Hardware After Acceptance of a Reset (4/4), corrected description of user option byte address	(a)

Remark: "Classification" in the above table classifies revisions as follows.

(a): Error correction, (b): Addition/change of specifications, (c): Addition/change of description or note,

(d): Addition/change of package, part number, or management division, (e): Addition/change of related documents

(10/11)

Page	Description	Classification
CHAPTER 25 POWER-ON-RESET CIRCUIT		
p.1565	25.1 Functions of Power-on-reset Circuit, corrected description of Caution and Remark	(a)
p.1567	Figure 25-2 Timing of Generation of Internal Reset Signal by Power-on-reset Circuit and Voltage Detector (1/2), corrected description of Note 3 and 4	(a)
p.1570	Figure 25-3 Example of Software Processing After Reset Release (1/2), corrected description of Setting timer array unit	(a)
CHAPTER 26 VOLTAGE DETECTOR		
p.1572	26.1 Functions of Voltage Detector, corrected description of detection level	(a)
p.1573	Figure 26-1 Block Diagram of Voltage Detector, corrected arrow to Controller	(a)
p.1576	Table 26-1 LVD Operation Mode and Detection Voltage Settings for User Option Byte (000C1H/020C1H), corrected Detection voltage	(a)
CHAPTER 27 SAFETY FUNCTIONS		
p.1602	Figure 27-8 Format of Error Address Store Register (ERADR), corrected reset value and Caution 1	(a)
p.1604	Figure 27-13 Format of Write Data Inversion Register (ECCDWRVR), corrected register name	(a)
p.1605	Figure 27-13 Format of Write Data Inversion Register (ECCDWRVR), corrected Caution 1	(a)
p.1611	27.3.5 Clock monitor, added description of (3) Cautions for use	(c)
p.1614	Figure 27-21 Invalid access detection area, corrected Caution 2 and 3	(b)
CHAPTER 29 OPTION BYTE		
p.1628	Figure 29-1 Format of User Option Byte (000C0H/020C0H), corrected Watchdog timer overflow time	(a)
p.1629	Figure 29-2 Format of User Option Byte (000C1H/020C1H) (1/2) LVD setting (interrupt & reset mode), corrected Detection voltage	(a)
p.1632	Figure 29-4 Format of On-chip Debug Option Byte (000C3H/020C3H), corrected Remark	(a)
CHAPTER 30 FLASH MEMORY		
p.1642	30.3.1 P40/TOOL0 pin, corrected Remark 1	(a)
p.1645	Figure 30-7 Setting of Flash Memory Programming Mode, corrected Remark	(a)
p.1647	Table 30-8 Signature Data List, corrected Description	(a)
p.1649	30.6 Self-Programming, corrected Remark 1	(a)
p.1654	30.7 Security Settings, corrected description of Disabling write	(a)
P.1658	30.8.3 Procedure for accessing data flash memory, added Caution 4	(b)
CHAPTER 33 INSTRUCTION SET		
p.1672 to 1682, 1684 to 1689	Table 33-5 Operation List 1 to 11 and 13 to 18, corrected description of the table	(a)
p.1682	Table 33-5 Operation List (11/18), deleted description of Multiply	(a)
CHAPTER 34 ELECTRICAL SPECIFICATIONS (GRADE L)		
p.1697	34.3.1 Pin Characteristics, corrected description of Total of all pins	(a)
p.1704	34.3.2 Supply Current Characteristics, corrected Conditions on Table, deleted description of Note 4	(a)
p.1707	34.3.2 Supply Current Characteristics, corrected description of Note 2	(a)
p.1709	34.4.1 Basic Operation, added of External System Clock Timing	(c)
p.1735	(4) When AVREF (+) = internal reference voltage (ADREFP1 = 1, ADREFP0 = 0), AVREF (-) = AVREFM/ANI1 (ADREFM = 1), target ANI pin: ANI0, ANI2 to ANI23, ANI24 to ANI30, corrected description of target ANI pin	(a)
p.1737	34.6.5 POR Circuit Characteristics, corrected description of Minimum pulse width, added of Note 2 and Figure	(c)
p.1739	34.8 RAM Data Retention Characteristics, corrected of Headline and Figure, added description of Note	(a)
p.1740	34.9 Flash Memory Programming Characteristics, corrected description of Table and Note 1	(a)

Remark: “Classification” in the above table classifies revisions as follows.

(a): Error correction, (b): Addition/change of specifications, (c): Addition/change of description or note,

(d): Addition/change of package, part number, or management division, (e): Addition/change of related documents

(11/11)

Page	Description	Classification
CHAPTER 35 ELECTRICAL SPECIFICATIONS (GRADE K)		
p.1748	35.3.1 Pin Characteristics, corrected description of Caution	(a)
p.1755	35.3.2 Supply Current Characteristics, corrected Conditions on Table, deleted description of Note 4	(a)
p.1758	35.3.2 Supply Current Characteristics, corrected description of Note 2	(a)
p.1760	35.4.1 Basic Operation, added of External System Clock Timing	(c)
p.1786	(4) When AVREF (+) = internal reference voltage (ADREFP1 = 1, ADREFP0 = 0), AVREF (-) = AVREFM/ANI1 (ADREFM = 1), target ANI pin: ANI0, ANI2 to ANI23, ANI24 to ANI30, corrected description of target ANI pin	(a)
p.1788	35.6.5 POR Circuit Characteristics, corrected description of Minimum pulse width, added of Note 2 and Figure	(c)
p.1789	(2) LVD detection voltage of interrupt & reset mode, corrected description of V_{LVD2}	(a)
p.1780	35.8 RAM Data Retention Characteristics, corrected of Headline and Figure, added description of Note	(a)
p.1791	35.9 Flash Memory Programming Characteristics, corrected description of Table and Note 1	(a)
CHAPTER 36 ELECTRICAL SPECIFICATIONS (GRADE Y)		
p.1799	36.3.1 Pin Characteristics, corrected description of Caution	(a)
p.1806	36.3.2 Supply Current Characteristics, corrected Conditions on Table, deleted description of Note 4	(a)
p.1809	36.3.2 Supply Current Characteristics, corrected description of Note 2	(a)
p.1810	36.4.1 Basic Operation, corrected description of Interrupt input high-level width, low-level width	(a)
p.1811	36.4.1 Basic Operation, added of External System Clock Timing	(c)
p.1832	36.5.4 LIN/UART Module (RLIN3) UART Mode, corrected description of SNOOZE mode	(a)
p.1838	36.6.5 POR Circuit Characteristics, corrected description of Minimum pulse width, added of Note 2 and Figure	(c)
p.1839	(1) LVD detection voltage of interrupt mode or reset mode, (2) LVD detection voltage of interrupt & reset mode, corrected description of Table	(b)
p.1840	36.8 RAM Data Retention Characteristics, corrected of Headline and Figure, added description of Note	(a)
p.1841	36.9 Flash Memory Programming Characteristics, corrected description of Table and Note 1	(a)

Remark: “Classification” in the above table classifies revisions as follows.

(a): Error correction, (b): Addition/change of specifications, (c): Addition/change of description or note,

(d): Addition/change of package, part number, or management division, (e): Addition/change of related documents

RL78/F13, F14 User's Manual: Hardware

Publication Date: Rev.2.20 Sep 1, 2023

Published by: Renesas Electronics Corporation

RL78/F13, F14

Renesas Electronics Corporation

R01UH0368EJ0210