STM32F103xC, STM32F103xD, STM32F103xE

High-density performance line Arm®-based 32-bit MCU with 256 to 512KB Flash, USB, CAN, 11 timers, 3 ADCs, 13 communication interfaces

Datasheet –production data

Features

- Core: Arm® 32-bit Cortex®-M3 CPU
  - 72 MHz maximum frequency, 1.25 DMIPS/MHz (Dhrystone 2.1) performance at 0 wait state memory access
  - Single-cycle multiplication and hardware division
- Memories
  - 256 to 512 Kbytes of Flash memory
  - up to 64 Kbytes of SRAM
  - Flexible static memory controller with 4 Chip Select. Supports Compact Flash, SRAM, PSRAM, NOR and NAND memories
  - LCD parallel interface, 8080/6800 modes
- Clock, reset and supply management
  - 2.0 to 3.6 V application supply and I/Os
  - POR, PDR, and programmable voltage detector (PVD)
  - 4-to-16 MHz crystal oscillator
  - Internal 8 MHz factory-trimmed RC
  - Internal 40 kHz RC with calibration
  - 32 kHz oscillator for RTC with calibration
- Low power
  - Sleep, Stop and Standby modes
  - V_{BAT} supply for RTC and backup registers
- 3 × 12-bit, 1 µs A/D converters (up to 21 channels)
  - Conversion range: 0 to 3.6 V
  - Triple-sample and hold capability
  - Temperature sensor
- 2 × 12-bit D/A converters
- DMA: 12-channel DMA controller
  - Supported peripherals: timers, ADCs, DAC, SDIO, I^2Ss, SPIs, I^2Cs and USARTs
- Debug mode
  - Serial wire debug (SWD) & JTAG interfaces
  - Cortex®-M3 Embedded Trace Macrocell™
- Up to 112 fast I/O ports
  - 51/80/112 I/Os, all mappable on 16 external interrupt vectors and almost all 5 V-tolerant

LQFP64 10 × 10 mm,
LQFP100 14 × 14 mm,
LQFP144 20 × 20 mm

WLCSP64

LFBGA100 10 × 10 mm
LFBGA144 10 × 10 mm

- Up to 11 timers
  - Up to four 16-bit timers, each with up to 4 IC/OC/PWM or pulse counter and quadrature (incremental) encoder input
  - 2 × 16-bit motor control PWM timers with dead-time generation and emergency stop
  - 2 × watchdog timers (Independent and Window)
  - SysTick timer: a 24-bit downcounter
  - 2 × 16-bit basic timers to drive the DAC
- Up to 13 communication interfaces
  - Up to 2 × I^2C interfaces (SMBus/PMBus)
  - Up to 5 USARTs (ISO 7816 interface, LIN, IrDA capability, modem control)
  - Up to 3 SPIs (18 Mbit/s), 2 with I^2S interface multiplexed
  - CAN interface (2.0B Active)
  - USB 2.0 full speed interface
  - SDIO interface
- CRC calculation unit, 96-bit unique ID
- ECOPACK® packages

Table 1.Device summary

Reference	Part number
STM32F103xC	STM32F103RC STM32F103VC STM32F103ZC
STM32F103xD	STM32F103RD STM32F103VD STM32F103ZD
STM32F103xE	STM32F103RE STM32F103ZE STM32F103VE

Contents

1 Introduction 9

2 Description 10

2.1 Device overview 11

2.2 Full compatibility throughout the family 14

2.3 Overview 15

2.3.1 Arm® Cortex®-M3 core with embedded Flash and SRAM 15

2.3.2 Embedded Flash memory 15

2.3.3 CRC (cyclic redundancy check) calculation unit 15

2.3.4 Embedded SRAM 15

2.3.5 FSMC (flexible static memory controller) 15

2.3.6 LCD parallel interface 16

2.3.7 Nested vectored interrupt controller (NVIC) 16

2.3.8 External interrupt/event controller (EXTI) 16

2.3.9 Clocks and startup 16

2.3.10 Boot modes 17

2.3.11 Power supply schemes 17

2.3.12 Power supply supervisor 17

2.3.13 Voltage regulator 17

2.3.14 Low-power modes 18

2.3.15 DMA 18

2.3.16 RTC (real-time clock) and backup registers 18

2.3.17 Timers and watchdogs 19

2.3.18 I²C bus 21

2.3.19 Universal synchronous/asynchronous receiver transmitters (USARTs) 21

2.3.20 Serial peripheral interface (SPI) 21

2.3.21 Inter-integrated sound (I^2S) 21

2.3.22 SDIO 22

2.3.23 Controller area network (CAN) 22

2.3.24 Universal serial bus (USB) 22

2.3.25 GPIOs (general-purpose inputs/outputs) 22

2.3.26 ADC (analog to digital converter) 22

2.3.27 DAC (digital-to-analog converter) 23

2.3.28 Temperature sensor 24

2.3.29 Serial wire JTAG debug port (SWJ-DP) 24
2.3.30 Embedded Trace Macrocell™ 24

3 Pinouts and pin descriptions 25

4 Memory mapping 40

5 Electrical characteristics 41

5.1 Parameter conditions 41
5.1.1 Minimum and maximum values 41
5.1.2 Typical values 41
5.1.3 Typical curves 41
5.1.4 Loading capacitor 41
5.1.5 Pin input voltage 41
5.1.6 Power supply scheme 42
5.1.7 Current consumption measurement 42
5.2 Absolute maximum ratings 43
5.3 Operating conditions 44
5.3.1 General operating conditions 44
5.3.2 Operating conditions at power-up / power-down 45
5.3.3 Embedded reset and power control block characteristics 45
5.3.4 Embedded reference voltage 46
5.3.5 Supply current characteristics 46
5.3.6 External clock source characteristics 58
5.3.7 Internal clock source characteristics 62
5.3.8 PLL characteristics 64
5.3.9 Memory characteristics 64
5.3.10 FSMC characteristics 66
5.3.11 EMC characteristics 86
5.3.12 Absolute maximum ratings (electrical sensitivity) 87
5.3.13 I/O current injection characteristics 88
5.3.14 I/O port characteristics 89
5.3.15 NRST pin characteristics 94
5.3.16 TIM timer characteristics 95
5.3.17 Communications interfaces 96
5.3.18 CAN (controller area network) interface 106
5.3.19 12-bit ADC characteristics 106

5.3.20 DAC electrical specifications 111
5.3.21 Temperature sensor characteristics 113

6 Package information 114
6.1 LFBGA144 package information 114
6.2 LFBGA100 package information 117
6.3 WLCSP64 package information 120
6.4 LQFP144 package information 122
6.5 LQFP100 package information 126
6.6 LQFP64 package information 129
6.7 Thermal characteristics 132
6.7.1 Reference document 132
6.7.2 Selecting the product temperature range 133

7 Ordering information 135

8 Revision history 136

List of tables

Table 1. Device summary . . . 1
Table 2. STM32F103xC, STM32F103xD and STM32F103xE features and peripheral counts . . . 11
Table 3. STM32F103xx family . . . 14
Table 4. High-density timer feature comparison . . . 19
Table 5. High-density STM32F103xC/D/E pin definitions . . . 31
Table 6. FSMC pin definition . . . 38
Table 7. Voltage characteristics . . . 43
Table 8. Current characteristics . . . 43
Table 9. Thermal characteristics . . . 44
Table 10. General operating conditions . . . 44
Table 11. Operating conditions at power-up / power-down . . . 45
Table 12. Embedded reset and power control block characteristics . . . 45
Table 13. Embedded internal reference voltage . . . 46
Table 14. Maximum current consumption in Run mode, code with data processing running from Flash . . . 47
Table 15. Maximum current consumption in Run mode, code with data processing running from RAM . . . 47
Table 16. Maximum current consumption in Sleep mode, code running from Flash or RAM . . . 49
Table 17. Typical and maximum current consumptions in Stop and Standby modes . . . 50
Table 18. Typical current consumption in Run mode, code with data processing running from Flash . . . 53
Table 19. Typical current consumption in Sleep mode, code running from Flash or RAM . . . 54
Table 20. Peripheral current consumption . . . 55
Table 21. High-speed external user clock characteristics . . . 58
Table 22. Low-speed external user clock characteristics . . . 58
Table 23. HSE 4-16 MHz oscillator characteristics . . . 60
Table 24. LSE oscillator characteristics (f_{LSE} = 32.768 kHz) . . . 61
Table 25. HSI oscillator characteristics . . . 62
Table 26. LSI oscillator characteristics . . . 63
Table 27. Low-power mode wakeup timings . . . 63
Table 28. PLL characteristics . . . 64
Table 29. Flash memory characteristics . . . 64
Table 30. Flash memory endurance and data retention . . . 65
Table 31. Asynchronous non-multiplexed SRAM/PSRAM/NOR read timings . . . 67
Table 32. Asynchronous non-multiplexed SRAM/PSRAM/NOR write timings . . . 68
Table 33. Asynchronous multiplexed PSRAM/NOR read timings . . . 69
Table 34. Asynchronous multiplexed PSRAM/NOR write timings . . . 70
Table 35. Synchronous multiplexed NOR/PSRAM read timings . . . 72
Table 36. Synchronous multiplexed PSRAM write timings . . . 74
Table 37. Synchronous non-multiplexed NOR/PSRAM read timings . . . 75
Table 38. Synchronous non-multiplexed PSRAM write timings . . . 76
Table 39. Switching characteristics for PC Card/CF read and write cycles . . . 81
Table 40. Switching characteristics for NAND Flash read and write cycles . . . 85
Table 41. EMS characteristics . . . 86
Table 42. EMI characteristics . . . 87
Table 43. ESD absolute maximum ratings . . . 87

Table 44. Electrical sensitivities . . . 88
Table 45. I/O current injection susceptibility . . . 88
Table 46. I/O static characteristics . . . 89
Table 47. Output voltage characteristics . . . 91
Table 48. I/O AC characteristics . . . 93
Table 49. NRST pin characteristics . . . 94
Table 50. TIMx characteristics . . . 95
Table 51. I^2C characteristics . . . 96
Table 52. SCL frequency (f_{PCLK1}= 36 MHz.,V_{DD_I2C} = 3.3 V) . . . 97
Table 53. SPI characteristics . . . 98
Table 54. I^2S characteristics . . . 101
Table 55. SD / MMC characteristics . . . 103
Table 56. USB startup time . . . 104
Table 57. USB DC electrical characteristics . . . 105
Table 58. USB: full-speed electrical characteristics . . . 105
Table 59. ADC characteristics . . . 106
Table 60. R_{AIN} max for f_{ADC} = 14 MHz . . . 107
Table 61. ADC accuracy - limited test conditions . . . 107
Table 62. ADC accuracy . . . 108
Table 63. DAC characteristics . . . 111
Table 64. TS characteristics . . . 113
Table 65. LFBGA144 – 144-ball low profile fine pitch ball grid array, 10 x 10 mm, 0.8 mm pitch, package mechanical data . . . 114
Table 66. LFBGA144 recommended PCB design rules (0.8 mm pitch BGA) . . . 115
Table 67. LFBGA100 - 10 x 10 mm low profile fine pitch ball grid array package mechanical data . . . 117
Table 68. LFBGA100 recommended PCB design rules (0.8 mm pitch BGA) . . . 118
Table 69. WLCSP, 64-ball 4.466 × 4.395 mm, 0.500 mm pitch, wafer-level chip-scale package mechanical data . . . 120
Table 70. WLCSP64 recommended PCB design rules (0.5 mm pitch) . . . 121
Table 71. LQFP144 - 144-pin, 20 x 20 mm low-profile quad flat package mechanical data . . . 123
Table 72. LQPF100 – 14 x 14 mm 100-pin low-profile quad flat package mechanical data . . . 126
Table 73. LQFP64 – 10 x 10 mm 64 pin low-profile quad flat package mechanical data . . . 129
Table 74. Package thermal characteristics . . . 132
Table 75. Ordering information scheme . . . 135

List of figures

Figure 1. STM32F103xC, STM32F103xD and STM32F103xE performance line block diagram . . . 12
Figure 2. Clock tree . . . 13
Figure 3. STM32F103xC/D/E BGA144 ballout . . . 25
Figure 4. STM32F103xC/D/E performance line BGA100 ballout . . . 26
Figure 5. STM32F103xC/D/E performance line LQFP144 pinout . . . 27
Figure 6. STM32F103xC/D/E performance line LQFP100 pinout . . . 28
Figure 7. STM32F103xC/D/E performance line LQFP64 pinout . . . 29
Figure 8. STM32F103xC/D/E performance line WLCSP64 ballout, ball side . . . 30
Figure 9. Memory map . . . 40
Figure 10. Pin loading conditions . . . 41
Figure 11. Pin input voltage . . . 41
Figure 12. Power supply scheme . . . 42
Figure 13. Current consumption measurement scheme . . . 42
Figure 14. Typical current consumption in Run mode versus frequency (at 3.6 V) - code with data processing running from RAM, peripherals enabled . . . 48
Figure 15. Typical current consumption in Run mode versus frequency (at 3.6 V)- code with data processing running from RAM, peripherals disabled . . . 48
Figure 16. Typical current consumption on V_{BAT} with RTC on vs. temperature at different V_{BAT} values . . . 51
Figure 17. Typical current consumption in Stop mode with regulator in run mode versus temperature at different V_{DD} values . . . 51
Figure 18. Typical current consumption in Stop mode with regulator in low-power mode versus temperature at different V_{DD} values . . . 52
Figure 19. Typical current consumption in Standby mode versus temperature at different V_{DD} values . . . 52
Figure 20. High-speed external clock source AC timing diagram . . . 59
Figure 21. Low-speed external clock source AC timing diagram . . . 59
Figure 22. Typical application with an 8 MHz crystal . . . 60
Figure 23. Typical application with a 32.768 kHz crystal . . . 62
Figure 24. Asynchronous non-multiplexed SRAM/PSRAM/NOR read waveforms . . . 66
Figure 25. Asynchronous non-multiplexed SRAM/PSRAM/NOR write waveforms . . . 67
Figure 26. Asynchronous multiplexed PSRAM/NOR read waveforms . . . 68
Figure 27. Asynchronous multiplexed PSRAM/NOR write waveforms . . . 70
Figure 28. Synchronous multiplexed NOR/PSRAM read timings . . . 71
Figure 29. Synchronous multiplexed PSRAM write timings . . . 73
Figure 30. Synchronous non-multiplexed NOR/PSRAM read timings . . . 75
Figure 31. Synchronous non-multiplexed PSRAM write timings . . . 76
Figure 32. PC Card/CompactFlash controller waveforms for common memory read access . . . 77
Figure 33. PC Card/CompactFlash controller waveforms for common memory write access . . . 78
Figure 34. PC Card/CompactFlash controller waveforms for attribute memory read access . . . 79
Figure 35. PC Card/CompactFlash controller waveforms for attribute memory write access . . . 80
Figure 36. PC Card/CompactFlash controller waveforms for I/O space read access . . . 80
Figure 37. PC Card/CompactFlash controller waveforms for I/O space write access . . . 81
Figure 38. NAND controller waveforms for read access . . . 83
Figure 39. NAND controller waveforms for write access . . . 84

Figure 40. NAND controller waveforms for common memory read access 84
Figure 41. NAND controller waveforms for common memory write access 85
Figure 42. Standard I/O input characteristics - CMOS port 90
Figure 43. Standard I/O input characteristics - TTL port 90
Figure 44. 5 V tolerant I/O input characteristics - CMOS port 90
Figure 45. 5 V tolerant I/O input characteristics - TTL port 91
Figure 46. I/O AC characteristics definition 94
Figure 47. Recommended NRST pin protection 95
Figure 48. I^2C bus AC waveforms and measurement circuit 97
Figure 49. SPI timing diagram - slave mode and CPHA = 0 99
Figure 50. SPI timing diagram - slave mode and CPHA = 1(1) 99
Figure 51. SPI timing diagram - master mode(1) 100
Figure 52. I^2S slave timing diagram (Philips protocol)(1) 102
Figure 53. I^2S master timing diagram (Philips protocol)(1) 102
Figure 54. SDIO high-speed mode 103
Figure 55. SD default mode 103
Figure 56. USB timings: definition of data signal rise and fall time 105
Figure 57. ADC accuracy characteristics 108
Figure 58. Typical connection diagram using the ADC 109
Figure 59. Power supply and reference decoupling (V_{REF+} not connected to V_{DDA}) 109
Figure 60. Power supply and reference decoupling (V_{REF+} connected to V_{DDA}) 110
Figure 61. 12-bit buffered /non-buffered DAC 112
Figure 62. LFBGA144 – 144-ball low profile fine pitch ball grid array, 10 x 10 mm, 0.8 mm pitch, package outline 114
Figure 63. LFBGA144 – 144-ball low profile fine pitch ball grid array, 10 x 10 mm, 0.8 mm pitch, package recommended footprint 115
Figure 64. LFBGA144 marking example (package top view) 116
Figure 65. LFBGA100 - 10 x 10 mm low profile fine pitch ball grid array package outline 117
Figure 66. LFBGA100 – 100-ball low profile fine pitch ball grid array, 10 x 10 mm, 0.8 mm pitch, package recommended footprintoutline 118
Figure 67. LFBGA100 marking example (package top view) 119
Figure 68. WLCSP, 64-ball 4.466 × 4.395 mm, 0.500 mm pitch, wafer-level chip-scale package outline 120
Figure 69. WLCSP64 - 64-ball, 4.4757 x 4.4049 mm, 0.5 mm pitch wafer level chip scale package recommended footprint 121
Figure 70. LQFP144 - 144-pin, 20 x 20 mm low-profile quad flat package outline 122
Figure 71. LQFP144 - 144-pin,20 x 20 mm low-profile quad flat package recommended footprint 124
Figure 72. LQFP144 marking example (package top view) 125
Figure 73. LQFP100 – 14 x 14 mm 100 pin low-profile quad flat package outline 126
Figure 74. LQFP100 recommended footprint 127
Figure 75. LQFP100 marking example (package top view) 128
Figure 76. LQFP64 – 10 x 10 mm 64 pin low-profile quad flat package outline 129
Figure 77. LQFP64 - 64-pin, 10 x 10 mm low-profile quad flat recommended footprint 130
Figure 78. LQFP64 marking example (package top view) 131
Figure 79. LQFP100 P_D max vs. T_A 134

1 Introduction

This datasheet provides the ordering information and mechanical device characteristics of the STM32F103xC, STM32F103xD and STM32F103xE high-density performance line microcontrollers. For more details on the whole STMicroelectronics STM32F103xC/D/E family, please refer to *Section 2.2: Full compatibility throughout the family*.

The high-density STM32F103xC/D/E datasheet should be read in conjunction with the STM32F10xxx reference manual.
For information on programming, erasing and protection of the internal Flash memory please refer to the *STM32F10xxx Flash programming manual.*
The reference and Flash programming manuals are both available from the STMicroelectronics website *www.st.com*.

For information on the Arm®[a] Cortex®-M3 core please refer to the Cortex®-M3 Technical Reference Manual, available from the *www.arm.com* website at the following address: *http://infocenter.arm.com*.

a. Arm is a registered trademark of Arm Limited (or its subsidiaries) in the US and/or elsewhere.

2 Description

The STM32F103xC, STM32F103xD and STM32F103xE performance line family incorporates the high-performance Arm® Cortex®-M3 32-bit RISC core operating at a 72 MHz frequency, high-speed embedded memories (Flash memory up to 512 Kbytes and SRAM up to 64 Kbytes), and an extensive range of enhanced I/Os and peripherals connected to two APB buses. All devices offer three 12-bit ADCs, four general-purpose 16-bit timers plus two PWM timers, as well as standard and advanced communication interfaces: up to two I^2Cs, three SPIs, two I^2Ss, one SDIO, five USARTs, an USB and a CAN.

The STM32F103xC/D/E high-density performance line family operates in the –40 to +105 °C temperature range, from a 2.0 to 3.6 V power supply. A comprehensive set of power-saving mode allows the design of low-power applications.

These features make the STM32F103xC/D/E high-density performance line microcontroller family suitable for a wide range of applications such as motor drives, application control, medical and handheld equipment, PC and gaming peripherals, GPS platforms, industrial applications, PLCs, inverters, printers, scanners, alarm systems video intercom, and HVAC.

2.1 Device overview

The STM32F103xC/D/E high-density performance line family offers devices in six different package types: from 64 pins to 144 pins. Depending on the device chosen, different sets of peripherals are included, the description below gives an overview of the complete range of peripherals proposed in this family.

Figure 1 shows the general block diagram of the device family.

Table 2. STM32F103xC, STM32F103xD and STM32F103xE features and peripheral counts

Peripherals		STM32F103Rx			STM32F103Vx			STM32F103Zx		
Flash memory in Kbytes		256	384	512	256	384	512	256	384	512
SRAM in Kbytes		48	64		48	64		48	64	
FSMC		No			Yes(1)			Yes		
Timers	General-purpose	4								
	Advanced-control	2								
	Basic	2								
Comm	SPI(I^2S)(2)	3(2)								
	I^2C	2								
	USART	5								
	USB	1								
	CAN	1								
	SDIO	1								
GPIOs		51			80			112		
12-bit ADC Number of channels		3 16			3 16			3 21		
12-bit DAC Number of channels		2 2								
CPU frequency		72 MHz								
Operating voltage		2.0 to 3.6 V								
Operating temperatures		Ambient temperatures: –40 to +85 °C /–40 to +105 °C (see *Table 10*) Junction temperature: –40 to + 125 °C (see *Table 10*)								
Package		LQFP64, WLCSP64			LQFP100, BGA100			LQFP144, BGA144		

1. For the LQFP100 and BGA100 packages, only FSMC Bank1 and Bank2 are available. Bank1 can only support a multiplexed NOR/PSRAM memory using the NE1 Chip Select. Bank2 can only support a 16- or 8-bit NAND Flash memory using the NCE2 Chip Select. The interrupt line cannot be used since Port G is not available in this package.
2. The SPI2 and SPI3 interfaces give the flexibility to work in an exclusive way in either the SPI mode or the I^2S audio mode.

Figure 1. STM32F103xC, STM32F103xD and STM32F103xE performance line block diagram

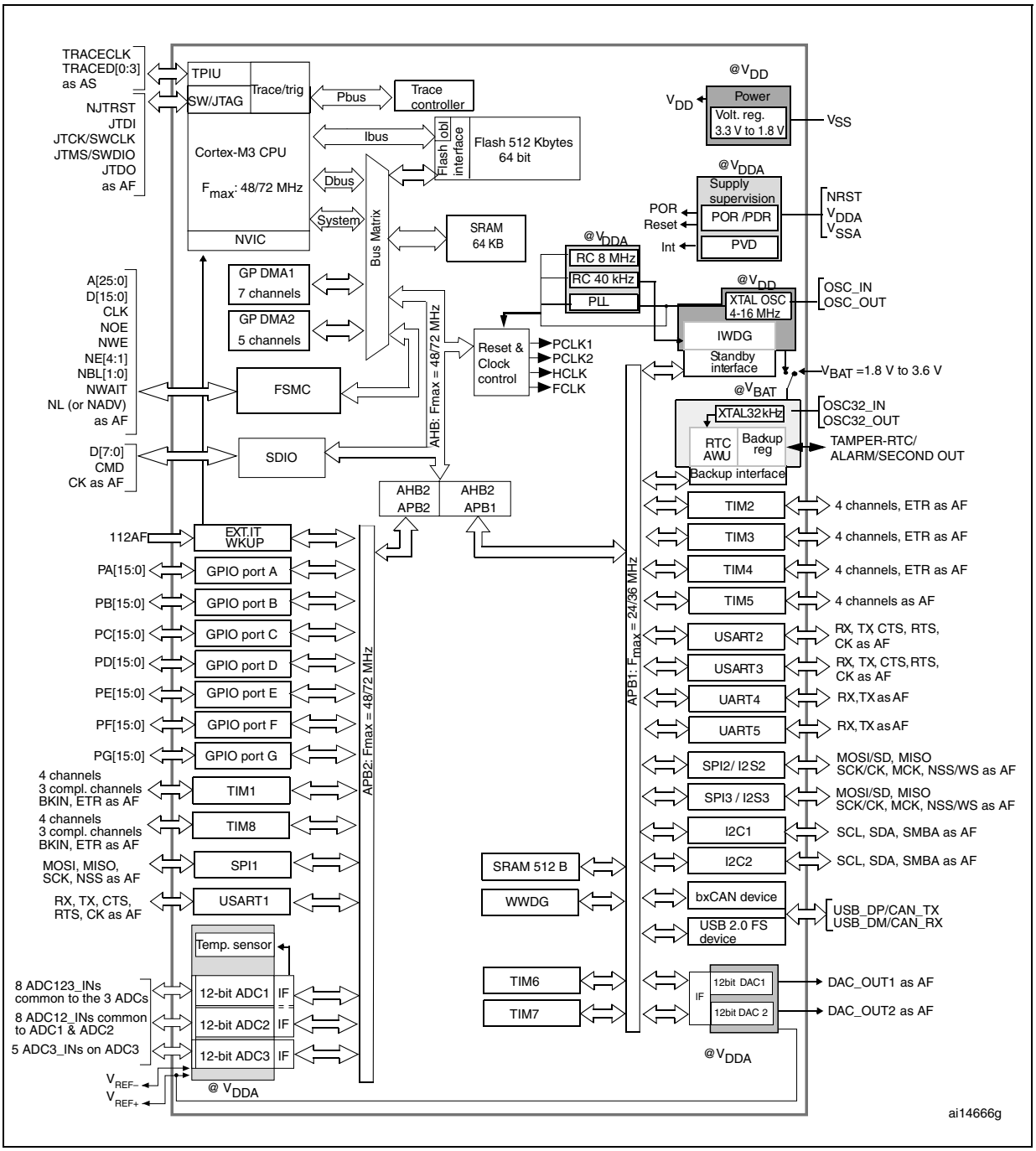

1. T_A = –40 °C to +85 °C (suffix 6, see *Table 75*) or –40 °C to +105 °C (suffix 7, see *Table 75*), junction temperature up to 105 °C or 125 °C, respectively.
2. AF = alternate function on I/O port pin.9

Figure 2. Clock tree

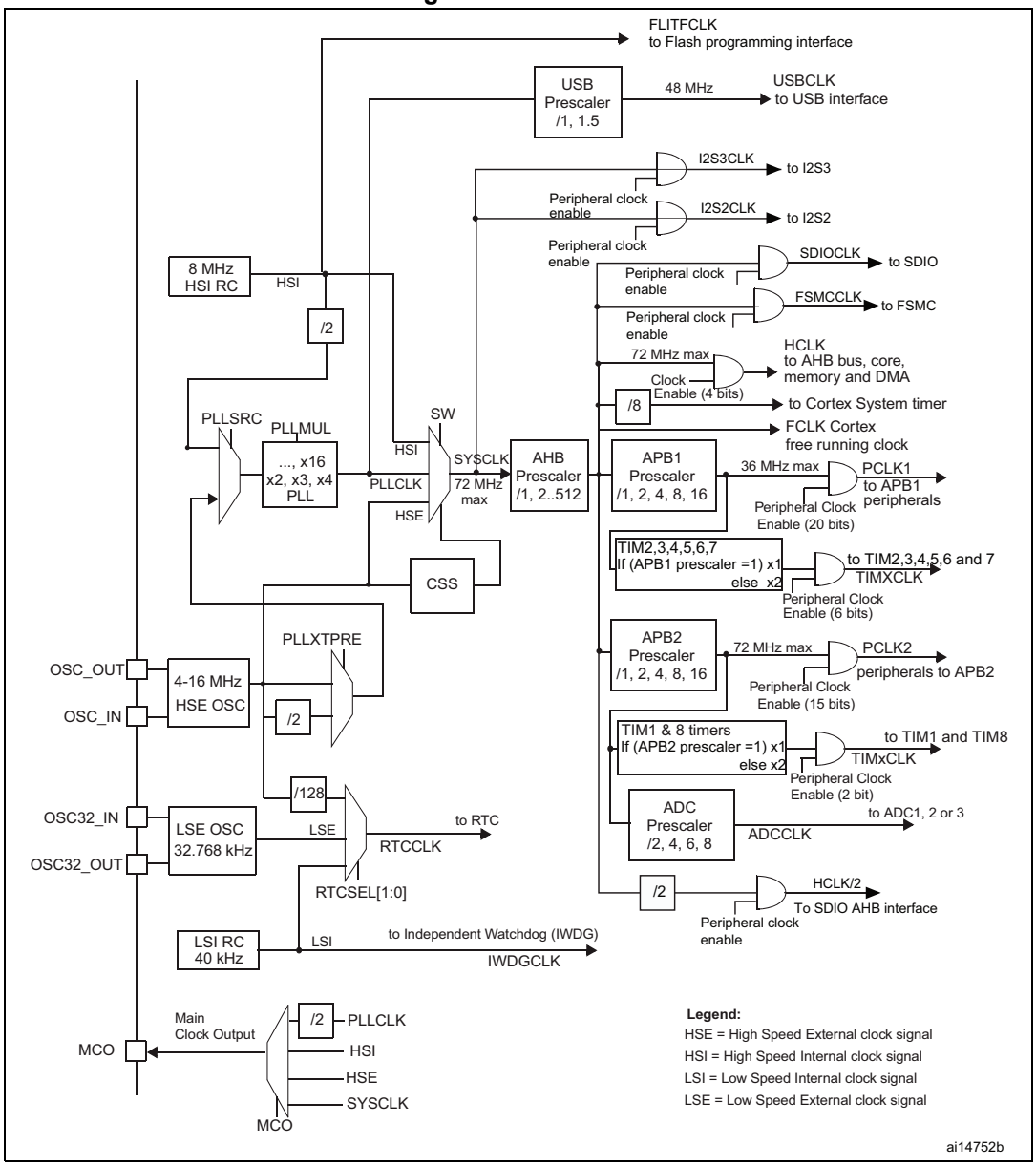

1. When the HSI is used as a PLL clock input, the maximum system clock frequency that can be achieved is 64 MHz.
2. For the USB function to be available, both HSE and PLL must be enabled, with the USBCLK at 48 MHz.
3. To have an ADC conversion time of 1 µs, APB2 must be at 14 MHz, 28 MHz or 56 MHz.

2.2 Full compatibility throughout the family

The STM32F103xC/D/E is a complete family whose members are fully pin-to-pin, software and feature compatible. In the reference manual, the STM32F103x4 and STM32F103x6 are identified as low-density devices, the STM32F103x8 and STM32F103xB are referred to as medium-density devices and the STM32F103xC, STM32F103xD and STM32F103xE are referred to as high-density devices.

Low-density and high-density devices are an extension of the STM32F103x8/B medium-density devices, they are specified in the STM32F103x4/6 and STM32F103xC/D/E datasheets, respectively. Low-density devices feature lower Flash memory and RAM capacities, less timers and peripherals. High-density devices have higher Flash memory and RAM capacities, and additional peripherals like SDIO, FSMC, I^2S and DAC while remaining fully compatible with the other members of the family.

The STM32F103x4, STM32F103x6, STM32F103xC, STM32F103xD and STM32F103xE are a drop-in replacement for the STM32F103x8/B devices, allowing the user to try different memory densities and providing a greater degree of freedom during the development cycle.

Moreover, the STM32F103xx performance line family is fully compatible with all existing STM32F101xx access line and STM32F102xx USB access line devices.

Table 3. STM32F103xx family

<table>
<tr><th rowspan="3">Pinout</th><th colspan="2">Low-density devices</th><th colspan="2">Medium-density devices</th><th colspan="3">High-density devices</th></tr>
<tr><th>16 KB Flash</th><th>32 KB Flash(1)</th><th>64 KB Flash</th><th>128 KB Flash</th><th>256 KB Flash</th><th>384 KB Flash</th><th>512 KB Flash</th></tr>
<tr><th>6 KB RAM</th><th>10 KB RAM</th><th>20 KB RAM</th><th>20 KB RAM</th><th>48 RAM</th><th>64 KB RAM</th><th>64 KB RAM</th></tr>
<tr><td>144</td><td colspan="4" rowspan="2"></td><td colspan="3" rowspan="4">5 × USARTs
4 × 16-bit timers, 2 × basic timers
3 × SPIs, 2 × I^2Ss, 2 × I2Cs
USB, CAN, 2 × PWM timers
3 × ADCs, 2 × DACs, 1 × SDIO
FSMC (100- and 144-pin packages(2))</td></tr>
<tr><td>100</td><td colspan="2" rowspan="3">3 × USARTs
3 × 16-bit timers
2 × SPIs, 2 × I^2Cs, USB, CAN, 1 × PWM timer
2 × ADCs</td></tr>
<tr><td>64</td><td colspan="2" rowspan="4">2 × USARTs
2 × 16-bit timers
1 × SPI, 1 × I^2C, USB, CAN,
1 × PWM timer
2 × ADCs</td></tr>
<tr><td>48</td><td colspan="3"></td></tr>
<tr><td>36</td><td colspan="5"></td></tr>
</table>

1. For orderable part numbers that do not show the A internal code after the temperature range code (6 or 7), the reference datasheet for electrical characteristics is that of the STM32F103x8/B medium-density devices.
2. Ports F and G are not available in devices delivered in 100-pin packages.

2.3 Overview

2.3.1 Arm® Cortex®-M3 core with embedded Flash and SRAM

The Arm Cortex®-M3 processor is the latest generation of Arm processors for embedded systems. It has been developed to provide a low-cost platform that meets the needs of MCU implementation, with a reduced pin count and low-power consumption, while delivering outstanding computational performance and an advanced system response to interrupts.

The Arm Cortex®-M3 32-bit RISC processor features exceptional code-efficiency, delivering the high-performance expected from an Arm core in the memory size usually associated with 8- and 16-bit devices.

With its embedded Arm core, STM32F103xC, STM32F103xD and STM32F103xE performance line family is compatible with all Arm tools and software.

Figure 1 shows the general block diagram of the device family.

2.3.2 Embedded Flash memory

Up to 512 Kbytes of embedded Flash is available for storing programs and data.

2.3.3 CRC (cyclic redundancy check) calculation unit

The CRC (cyclic redundancy check) calculation unit is used to get a CRC code from a 32-bit data word and a fixed generator polynomial.

Among other applications, CRC-based techniques are used to verify data transmission or storage integrity. In the scope of the EN/IEC 60335-1 standard, they offer a means of verifying the Flash memory integrity. The CRC calculation unit helps compute a signature of the software during runtime, to be compared with a reference signature generated at link-time and stored at a given memory location.

2.3.4 Embedded SRAM

Up to 64 Kbytes of embedded SRAM accessed (read/write) at CPU clock speed with 0 wait states.

2.3.5 FSMC (flexible static memory controller)

The FSMC is embedded in the STM32F103xC, STM32F103xD and STM32F103xE performance line family. It has four Chip Select outputs supporting the following modes: PC Card/Compact Flash, SRAM, PSRAM, NOR and NAND.

Functionality overview:

- The three FSMC interrupt lines are ORed in order to be connected to the NVIC
- Write FIFO
- Code execution from external memory except for NAND Flash and PC Card
- The targeted frequency, f_{CLK}, is HCLK/2, so external access is at 36 MHz when HCLK is at 72 MHz and external access is at 24 MHz when HCLK is at 48 MHz

2.3.6 LCD parallel interface

The FSMC can be configured to interface seamlessly with most graphic LCD controllers. It supports the Intel 8080 and Motorola 6800 modes, and is flexible enough to adapt to specific LCD interfaces. This LCD parallel interface capability makes it easy to build cost-effective graphic applications using LCD modules with embedded controllers or high-performance solutions using external controllers with dedicated acceleration.

2.3.7 Nested vectored interrupt controller (NVIC)

The STM32F103xC, STM32F103xD and STM32F103xE performance line embeds a nested vectored interrupt controller able to handle up to 60 maskable interrupt channels (not including the 16 interrupt lines of Cortex®-M3) and 16 priority levels.

- Closely coupled NVIC gives low latency interrupt processing
- Interrupt entry vector table address passed directly to the core
- Closely coupled NVIC core interface
- Allows early processing of interrupts
- Processing of *late arriving* higher priority interrupts
- Support for tail-chaining
- Processor state automatically saved
- Interrupt entry restored on interrupt exit with no instruction overhead

This hardware block provides flexible interrupt management features with minimal interrupt latency.

2.3.8 External interrupt/event controller (EXTI)

The external interrupt/event controller consists of 19 edge detector lines used to generate interrupt/event requests. Each line can be independently configured to select the trigger event (rising edge, falling edge, both) and can be masked independently. A pending register maintains the status of the interrupt requests. The EXTI can detect an external line with a pulse width shorter than the Internal APB2 clock period. Up to 112 GPIOs can be connected to the 16 external interrupt lines.

2.3.9 Clocks and startup

System clock selection is performed on startup, however the internal RC 8 MHz oscillator is selected as default CPU clock on reset. An external 4-16 MHz clock can be selected, in which case it is monitored for failure. If failure is detected, the system automatically switches back to the internal RC oscillator. A software interrupt is generated if enabled. Similarly, full interrupt management of the PLL clock entry is available when necessary (for example with failure of an indirectly used external oscillator).

Several prescalers allow the configuration of the AHB frequency, the high speed APB (APB2) and the low speed APB (APB1) domains. The maximum frequency of the AHB and the high speed APB domains is 72 MHz. The maximum allowed frequency of the low speed APB domain is 36 MHz. See *Figure 2* for details on the clock tree.

2.3.10 Boot modes

At startup, boot pins are used to select one of three boot options:

- Boot from user Flash: you have an option to boot from any of two memory banks. By default, boot from Flash memory bank 1 is selected. You can choose to boot from Flash memory bank 2 by setting a bit in the option bytes.
- Boot from system memory
- Boot from embedded SRAM

The boot loader is located in system memory. It is used to reprogram the Flash memory by using USART1.

2.3.11 Power supply schemes

- V_{DD} = 2.0 to 3.6 V: external power supply for I/Os and the internal regulator. Provided externally through V_{DD} pins.
- V_{SSA}, V_{DDA} = 2.0 to 3.6 V: external analog power supplies for ADC, DAC, Reset blocks, RCs and PLL (minimum voltage to be applied to VDDA is 2.4 V when the ADC or DAC is used). V_{DDA} and V_{SSA} must be connected to V_{DD} and V_{SS}, respectively.
- V_{BAT} = 1.8 to 3.6 V: power supply for RTC, external clock 32 kHz oscillator and backup registers (through power switch) when V_{DD} is not present.

For more details on how to connect power pins, refer to *Figure 12: Power supply scheme*.

2.3.12 Power supply supervisor

The device has an integrated power-on reset (POR)/power-down reset (PDR) circuitry. It is always active, and ensures proper operation starting from/down to 2 V. The device remains in reset mode when V_{DD} is below a specified threshold, $V_{POR/PDR}$, without the need for an external reset circuit.

The device features an embedded programmable voltage detector (PVD) that monitors the V_{DD}/V_{DDA} power supply and compares it to the V_{PVD} threshold. An interrupt can be generated when V_{DD}/V_{DDA} drops below the V_{PVD} threshold and/or when V_{DD}/V_{DDA} is higher than the V_{PVD} threshold. The interrupt service routine can then generate a warning message and/or put the MCU into a safe state. The PVD is enabled by software. Refer to *Table 12: Embedded reset and power control block characteristics* for the values of $V_{POR/PDR}$ and V_{PVD}.

2.3.13 Voltage regulator

The regulator has three operation modes: main (MR), low-power (LPR) and power down.

- MR is used in the nominal regulation mode (Run)
- LPR is used in the Stop modes.
- Power down is used in Standby mode: the regulator output is in high impedance: the kernel circuitry is powered down, inducing zero consumption (but the contents of the registers and SRAM are lost)

This regulator is always enabled after reset. It is disabled in Standby mode.

2.3.14 Low-power modes

The STM32F103xC, STM32F103xD and STM32F103xE performance line supports three low-power modes to achieve the best compromise between low-power consumption, short startup time and available wakeup sources:

- **Sleep** mode

  In Sleep mode, only the CPU is stopped. All peripherals continue to operate and can wake up the CPU when an interrupt/event occurs.

- **Stop** mode

  Stop mode achieves the lowest power consumption while retaining the content of SRAM and registers. All clocks in the 1.8 V domain are stopped, the PLL, the HSI RC and the HSE crystal oscillators are disabled. The voltage regulator can also be put either in normal or in low-power mode.
  The device can be woken up from Stop mode by any of the EXTI line. The EXTI line source can be one of the 16 external lines, the PVD output, the RTC alarm or the USB wakeup.

- **Standby** mode

  The Standby mode is used to achieve the lowest power consumption. The internal voltage regulator is switched off so that the entire 1.8 V domain is powered off. The PLL, the HSI RC and the HSE crystal oscillators are also switched off. After entering Standby mode, SRAM and register contents are lost except for registers in the Backup domain and Standby circuitry.

  The device exits Standby mode when an external reset (NRST pin), an IWDG reset, a rising edge on the WKUP pin, or an RTC alarm occurs.

Note: The RTC, the IWDG, and the corresponding clock sources are not stopped by entering Stop or Standby mode.

2.3.15 DMA

The flexible 12-channel general-purpose DMAs (7 channels for DMA1 and 5 channels for DMA2) are able to manage memory-to-memory, peripheral-to-memory and memory-to-peripheral transfers. The two DMA controllers support circular buffer management, removing the need for user code intervention when the controller reaches the end of the buffer.

Each channel is connected to dedicated hardware DMA requests, with support for software trigger on each channel. Configuration is made by software and transfer sizes between source and destination are independent.

The DMA can be used with the main peripherals: SPI, I^2C, USART, general-purpose, basic and advanced-control timers TIMx, DAC, I^2S, SDIO and ADC.

2.3.16 RTC (real-time clock) and backup registers

The RTC and the backup registers are supplied through a switch that takes power either on V_{DD} supply when present or through the V_{BAT} pin. The backup registers are forty-two 16-bit registers used to store 84 bytes of user application data when V_{DD} power is not present. They are not reset by a system or power reset, and they are not reset when the device wakes up from the Standby mode.

The real-time clock provides a set of continuously running counters which can be used with suitable software to provide a clock calendar function, and provides an alarm interrupt and a

periodic interrupt. It is clocked by a 32.768 kHz external crystal, resonator or oscillator, the internal low-power RC oscillator or the high-speed external clock divided by 128. The internal low-speed RC has a typical frequency of 40 kHz. The RTC can be calibrated using an external 512 Hz output to compensate for any natural quartz deviation. The RTC features a 32-bit programmable counter for long term measurement using the Compare register to generate an alarm. A 20-bit prescaler is used for the time base clock and is by default configured to generate a time base of 1 second from a clock at 32.768 kHz.

2.3.17 Timers and watchdogs

The high-density STM32F103xC/D/E performance line devices include up to two advanced-control timers, up to four general-purpose timers, two basic timers, two watchdog timers and a SysTick timer.

Table 4 compares the features of the advanced-control, general-purpose and basic timers.

Table 4. High-density timer feature comparison

Timer	Counter resolution	Counter type	Prescaler factor	DMA request generation	Capture/compare channels	Complementary outputs
TIM1, TIM8	16-bit	Up, down, up/down	Any integer between 1 and 65536	Yes	4	Yes
TIM2, TIM3, TIM4, TIM5	16-bit	Up, down, up/down	Any integer between 1 and 65536	Yes	4	No
TIM6, TIM7	16-bit	Up	Any integer between 1 and 65536	Yes	0	No

Advanced-control timers (TIM1 and TIM8)

The two advanced-control timers (TIM1 and TIM8) can each be seen as a three-phase PWM multiplexed on 6 channels. They have complementary PWM outputs with programmable inserted dead-times. They can also be seen as a complete general-purpose timer. The 4 independent channels can be used for:

- Input capture
- Output compare
- PWM generation (edge or center-aligned modes)
- One-pulse mode output

If configured as a standard 16-bit timer, it has the same features as the TIMx timer. If configured as the 16-bit PWM generator, it has full modulation capability (0-100%).

In debug mode, the advanced-control timer counter can be frozen and the PWM outputs disabled to turn off any power switch driven by these outputs.

Many features are shared with those of the general-purpose TIM timers which have the same architecture. The advanced-control timer can therefore work together with the TIM timers via the Timer Link feature for synchronization or event chaining.

General-purpose timers (TIMx)

There are up to 4 synchronizable general-purpose timers (TIM2, TIM3, TIM4 and TIM5) embedded in the STM32F103xC, STM32F103xD and STM32F103xE performance line devices. These timers are based on a 16-bit auto-reload up/down counter, a 16-bit prescaler and feature 4 independent channels each for input capture/output compare, PWM or one-pulse mode output. This gives up to 16 input captures / output compares / PWMs on the largest packages.
The general-purpose timers can work together with the advanced-control timer via the Timer Link feature for synchronization or event chaining. Their counter can be frozen in debug mode. Any of the general-purpose timers can be used to generate PWM outputs. They all have independent DMA request generation.

These timers are capable of handling quadrature (incremental) encoder signals and the digital outputs from 1 to 3 hall-effect sensors.

Basic timers TIM6 and TIM7

These timers are mainly used for DAC trigger generation. They can also be used as a generic 16-bit time base.

Independent watchdog

The independent watchdog is based on a 12-bit downcounter and 8-bit prescaler. It is clocked from an independent 40 kHz internal RC and as it operates independently from the main clock, it can operate in Stop and Standby modes. It can be used either as a watchdog to reset the device when a problem occurs, or as a free running timer for application timeout management. It is hardware or software configurable through the option bytes. The counter can be frozen in debug mode.

Window watchdog

The window watchdog is based on a 7-bit downcounter that can be set as free running. It can be used as a watchdog to reset the device when a problem occurs. It is clocked from

the main clock. It has an early warning interrupt capability and the counter can be frozen in debug mode.

SysTick timer

This timer is dedicated to real-time operating systems, but could also be used as a standard down counter. It features:

- A 24-bit down counter
- Autoreload capability
- Maskable system interrupt generation when the counter reaches 0.
- Programmable clock source

2.3.18 I²C bus

Up to two I²C bus interfaces can operate in multimaster and slave modes. They can support standard and fast modes.

They support 7/10-bit addressing mode and 7-bit dual addressing mode (as slave). A hardware CRC generation/verification is embedded.

They can be served by DMA and they support SMBus 2.0/PMBus.

2.3.19 Universal synchronous/asynchronous receiver transmitters (USARTs)

The STM32F103xC, STM32F103xD and STM32F103xE performance line embeds three universal synchronous/asynchronous receiver transmitters (USART1, USART2 and USART3) and two universal asynchronous receiver transmitters (UART4 and UART5).

These five interfaces provide asynchronous communication, IrDA SIR ENDEC support, multiprocessor communication mode, single-wire half-duplex communication mode and have LIN Master/Slave capability.

The USART1 interface is able to communicate at speeds of up to 4.5 Mbit/s. The other available interfaces communicate at up to 2.25 Mbit/s.

USART1, USART2 and USART3 also provide hardware management of the CTS and RTS signals, Smart Card mode (ISO 7816 compliant) and SPI-like communication capability. All interfaces can be served by the DMA controller except for UART5.

2.3.20 Serial peripheral interface (SPI)

Up to three SPIs are able to communicate up to 18 Mbits/s in slave and master modes in full-duplex and simplex communication modes. The 3-bit prescaler gives 8 master mode frequencies and the frame is configurable to 8 bits or 16 bits. The hardware CRC generation/verification supports basic SD Card/MMC modes.

All SPIs can be served by the DMA controller.

2.3.21 Inter-integrated sound (I^2S)

Two standard I^2S interfaces (multiplexed with SPI2 and SPI3) are available, that can be operated in master or slave mode. These interfaces can be configured to operate with 16/32 bit resolution, as input or output channels. Audio sampling frequencies from 8 kHz up to 48 kHz are supported. When either or both of the I^2S interfaces is/are configured in master

mode, the master clock can be output to the external DAC/CODEC at 256 times the sampling frequency.

2.3.22 SDIO

An SD/SDIO/MMC host interface is available, that supports MultiMediaCard System Specification Version 4.2 in three different databus modes: 1-bit (default), 4-bit and 8-bit. The interface allows data transfer at up to 48 MHz in 8-bit mode, and is compliant with SD Memory Card Specifications Version 2.0.
The SDIO Card Specification Version 2.0 is also supported with two different databus modes: 1-bit (default) and 4-bit.

The current version supports only one SD/SDIO/MMC4.2 card at any one time and a stack of MMC4.1 or previous.

In addition to SD/SDIO/MMC, this interface is also fully compliant with the CE-ATA digital protocol Rev1.1.

2.3.23 Controller area network (CAN)

The CAN is compliant with specifications 2.0A and B (active) with a bit rate up to 1 Mbit/s. It can receive and transmit standard frames with 11-bit identifiers as well as extended frames with 29-bit identifiers. It has three transmit mailboxes, two receive FIFOs with 3 stages and 14 scalable filter banks.

2.3.24 Universal serial bus (USB)

The STM32F103xC, STM32F103xD and STM32F103xE performance line embed a USB device peripheral compatible with the USB full-speed 12 Mbs. The USB interface implements a full-speed (12 Mbit/s) function interface. It has software-configurable endpoint setting and suspend/resume support. The dedicated 48 MHz clock is generated from the internal main PLL (the clock source must use a HSE crystal oscillator).

2.3.25 GPIOs (general-purpose inputs/outputs)

Each of the GPIO pins can be configured by software as output (push-pull or open-drain), as input (with or without pull-up or pull-down) or as peripheral alternate function. Most of the GPIO pins are shared with digital or analog alternate functions. All GPIOs are high current-capable.

The I/Os alternate function configuration can be locked if needed following a specific sequence in order to avoid spurious writing to the I/Os registers.

2.3.26 ADC (analog to digital converter)

Three 12-bit analog-to-digital converters are embedded into STM32F103xC, STM32F103xD and STM32F103xE performance line devices and each ADC shares up to 21 external channels, performing conversions in single-shot or scan modes. In scan mode, automatic conversion is performed on a selected group of analog inputs.

Additional logic functions embedded in the ADC interface allow:

- Simultaneous sample and hold
- Interleaved sample and hold
- Single shunt

The ADC can be served by the DMA controller.

An analog watchdog feature allows very precise monitoring of the converted voltage of one, some or all selected channels. An interrupt is generated when the converted voltage is outside the programmed thresholds.

The events generated by the general-purpose timers (TIMx) and the advanced-control timers (TIM1 and TIM8) can be internally connected to the ADC start trigger and injection trigger, respectively, to allow the application to synchronize A/D conversion and timers.

2.3.27 DAC (digital-to-analog converter)

The two 12-bit buffered DAC channels can be used to convert two digital signals into two analog voltage signal outputs. The chosen design structure is composed of integrated resistor strings and an amplifier in inverting configuration.

This dual digital Interface supports the following features:

- two DAC converters: one for each output channel
- 8-bit or 12-bit monotonic output
- left or right data alignment in 12-bit mode
- synchronized update capability
- noise-wave generation
- triangular-wave generation
- dual DAC channel independent or simultaneous conversions
- DMA capability for each channel
- external triggers for conversion
- input voltage reference V_{REF+}

Eight DAC trigger inputs are used in the STM32F103xC, STM32F103xD and STM32F103xE performance line family. The DAC channels are triggered through the timer update outputs that are also connected to different DMA channels.

2.3.28 Temperature sensor

The temperature sensor has to generate a voltage that varies linearly with temperature. The conversion range is between 2 V < V_{DDA} < 3.6 V. The temperature sensor is internally connected to the ADC1_IN16 input channel which is used to convert the sensor output voltage into a digital value.

2.3.29 Serial wire JTAG debug port (SWJ-DP)

The Arm SWJ-DP Interface is embedded, and is a combined JTAG and serial wire debug port that enables either a serial wire debug or a JTAG probe to be connected to the target. The JTAG TMS and TCK pins are shared respectively with SWDIO and SWCLK and a specific sequence on the TMS pin is used to switch between JTAG-DP and SW-DP.

2.3.30 Embedded Trace Macrocell™

The Arm® Embedded Trace Macrocell provides a greater visibility of the instruction and data flow inside the CPU core by streaming compressed data at a very high rate from the STM32F10xxx through a small number of ETM pins to an external hardware trace port analyzer (TPA) device. The TPA is connected to a host computer using USB, Ethernet, or any other high-speed channel. Real-time instruction and data flow activity can be recorded and then formatted for display on the host computer running debugger software. TPA hardware is commercially available from common development tool vendors. It operates with third party debugger software tools.

3 Pinouts and pin descriptions

Figure 3. STM32F103xC/D/E BGA144 ballout

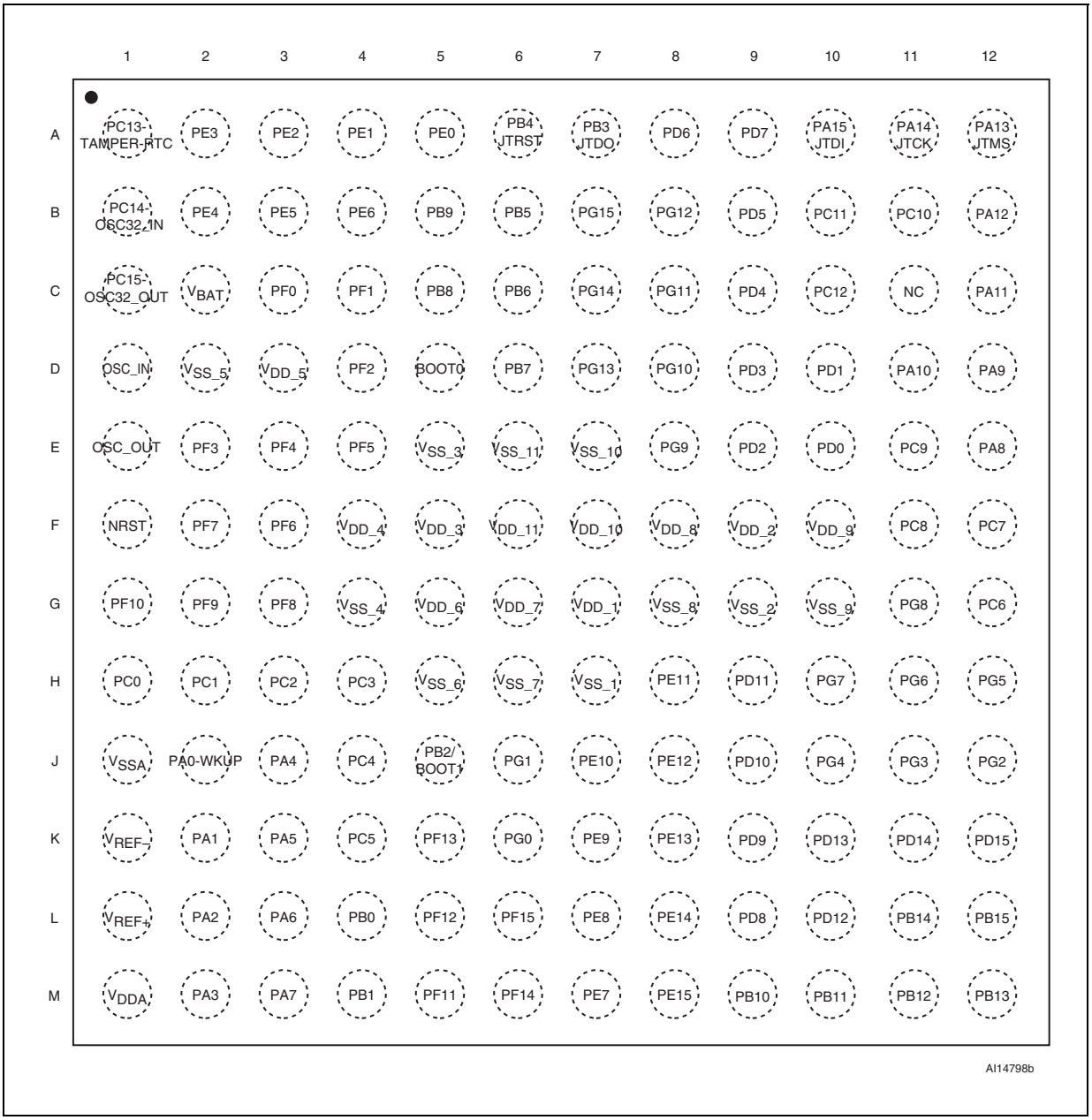

1. The above figure shows the package top view.

Figure 4. STM32F103xC/D/E performance line BGA100 ballout

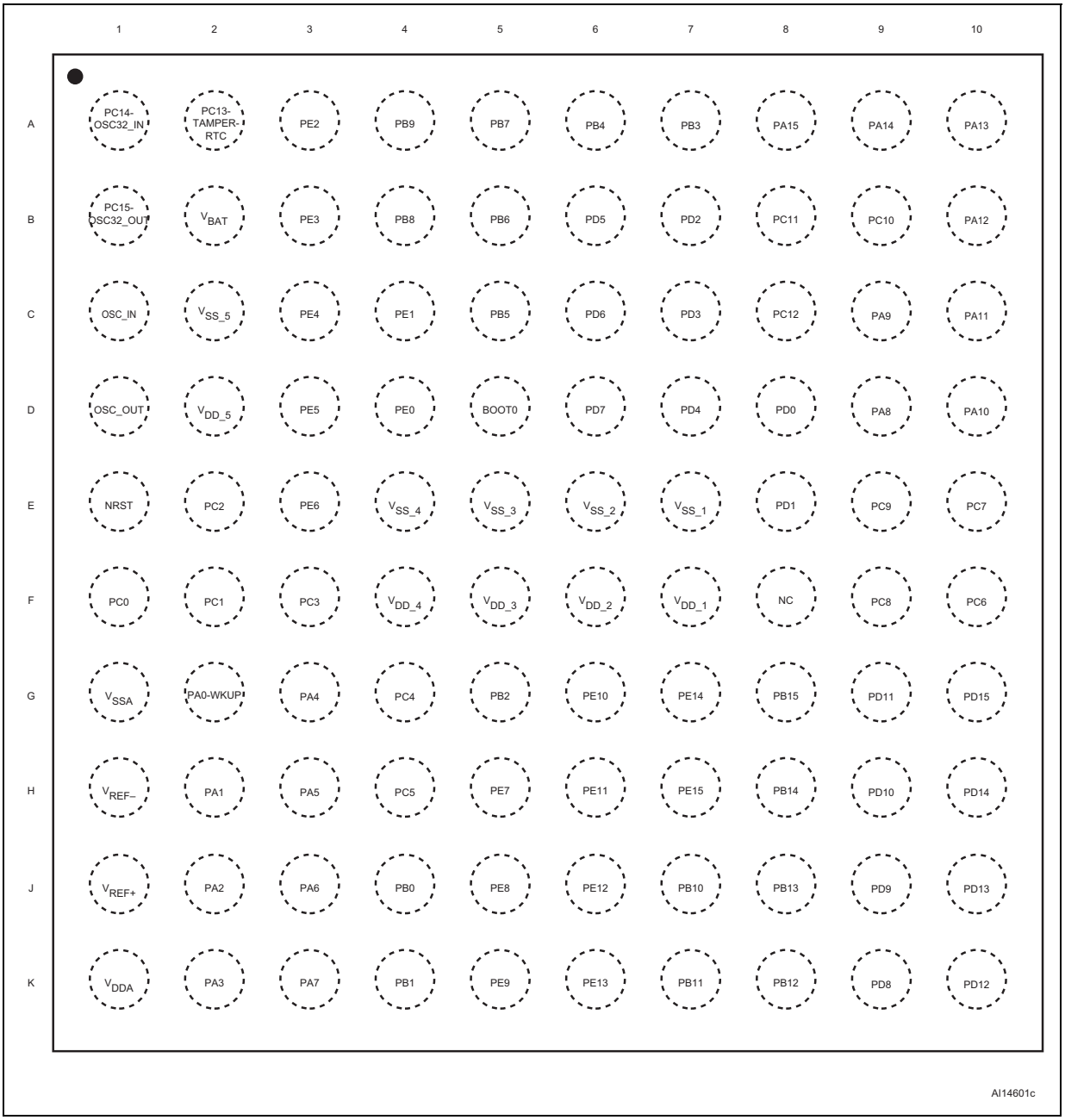

1. The above figure shows the package top view.

Figure 5. STM32F103xC/D/E performance line LQFP144 pinout

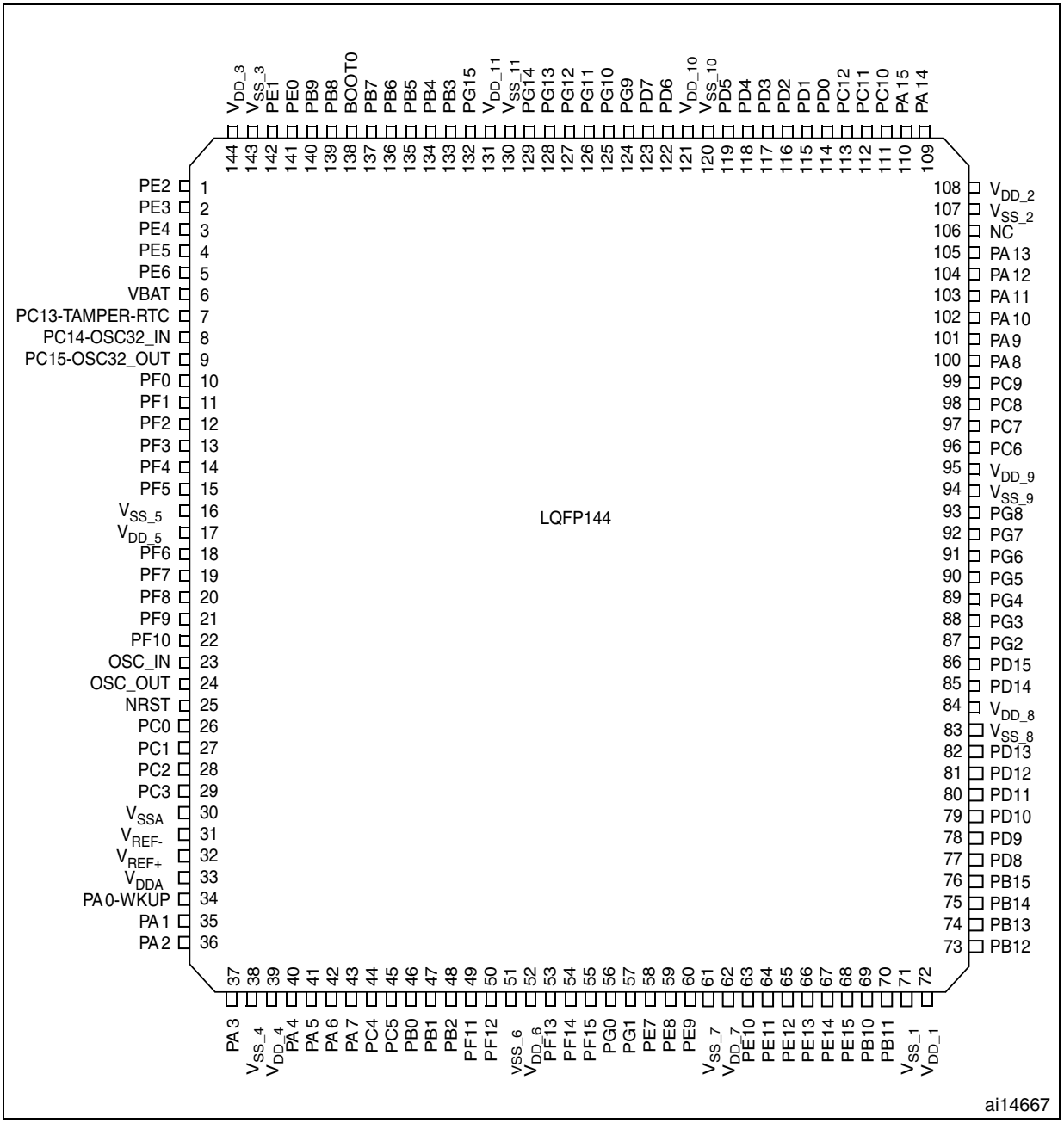

1. The above figure shows the package top view.

Figure 6. STM32F103xC/D/E performance line LQFP100 pinout

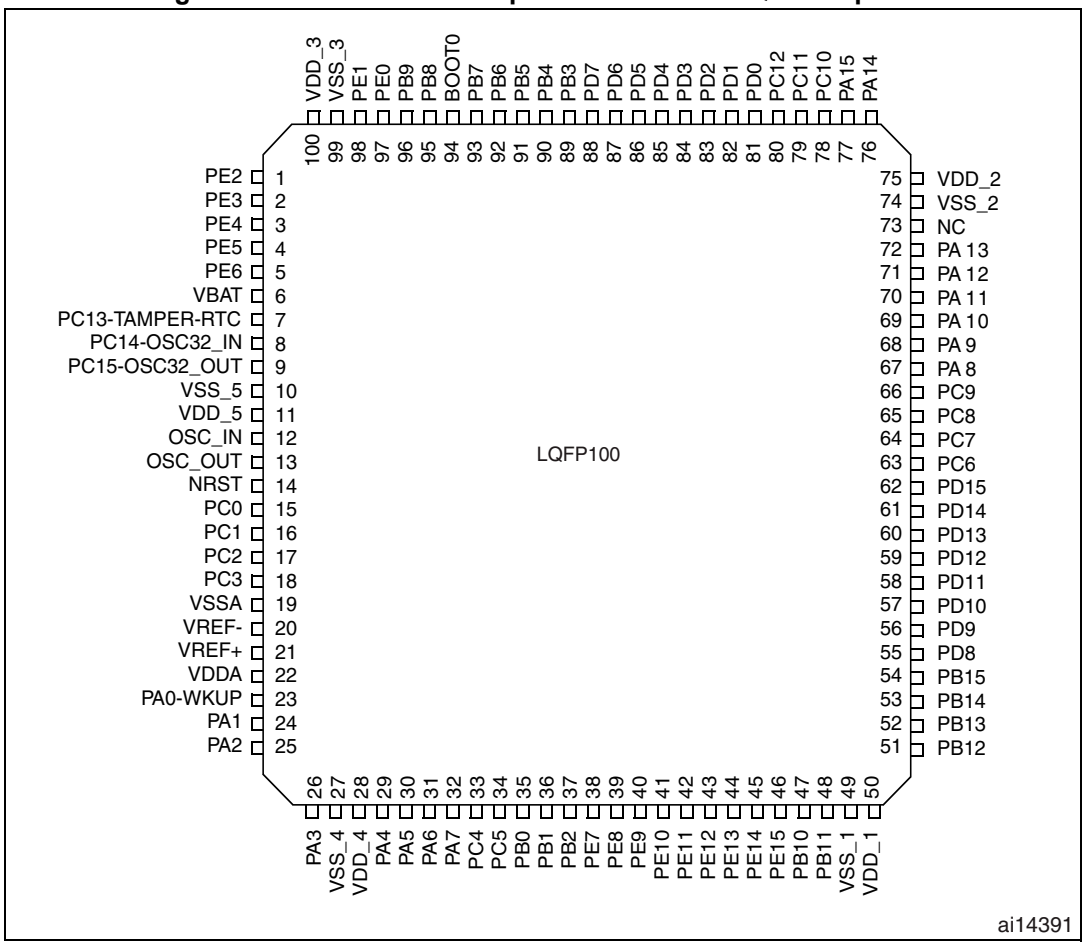

1. The above figure shows the package top view.

Figure 7. STM32F103xC/D/E performance line LQFP64 pinout

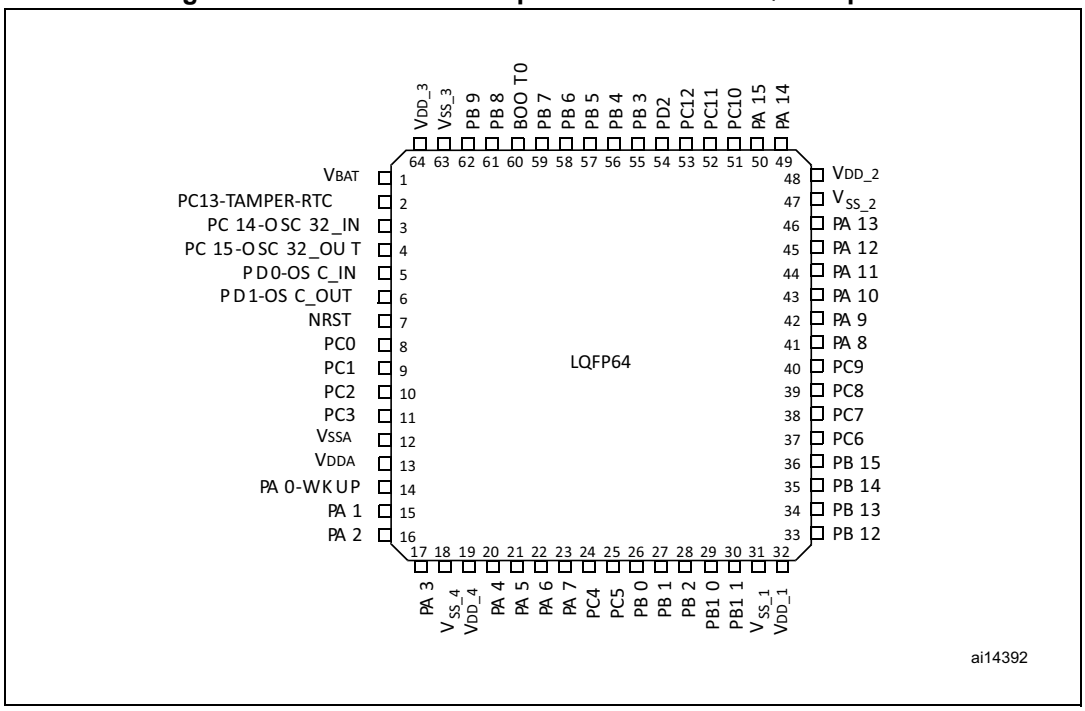

1. The above figure shows the package top view.

Figure 8. STM32F103xC/D/E performance line WLCSP64 ballout, ball side

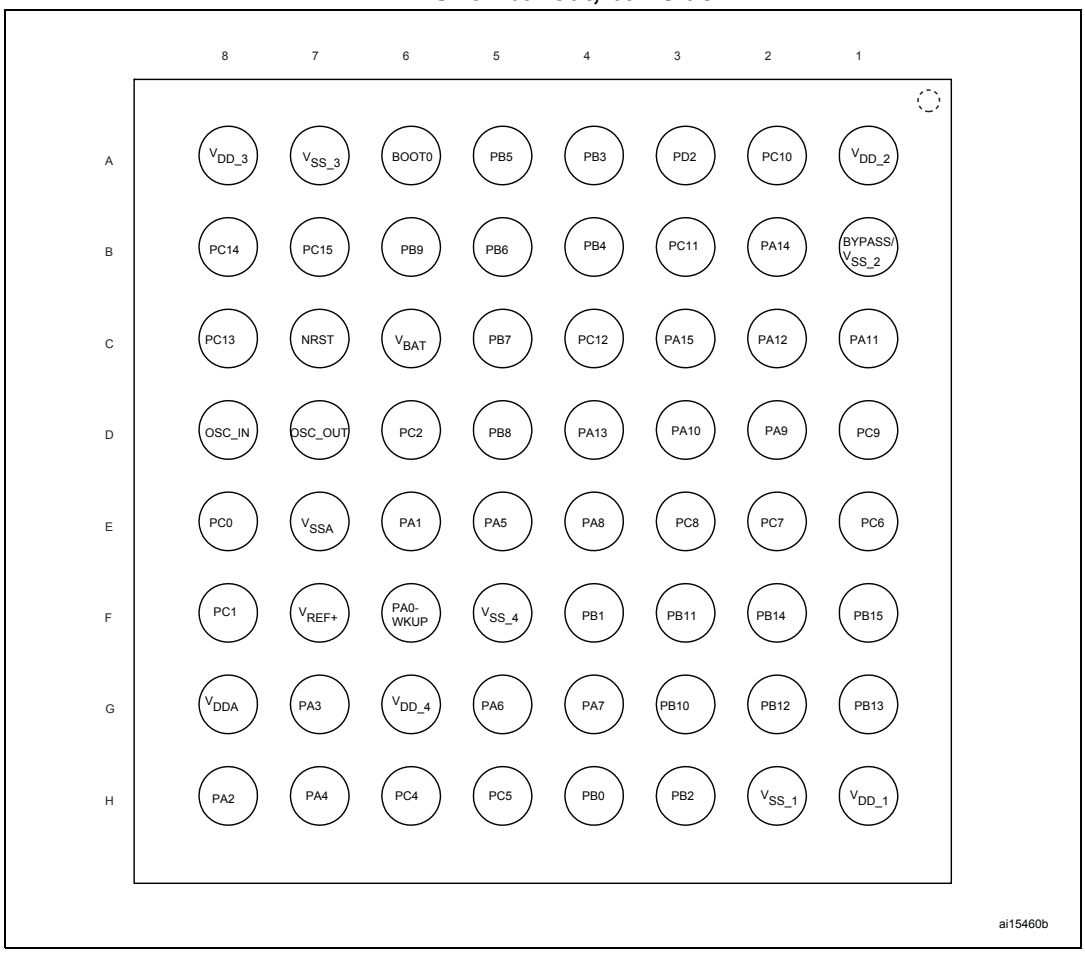

Table 5. High-density STM32F103xC/D/E pin definitions

Pins						Pin name	Type(1)	I / O Level(2)	Main function(3) (after reset)	Alternate functions(4)	
LFBGA144	LFBGA100	WLCSP64	LQFP64	LQFP100	LQFP144					Default	Remap
A3	A3	-	-	1	1	PE2	I/O	FT	PE2	TRACECK/ FSMC_A23	-
A2	B3	-	-	2	2	PE3	I/O	FT	PE3	TRACED0/FSMC_A19	-
B2	C3	-	-	3	3	PE4	I/O	FT	PE4	TRACED1/FSMC_A20	-
B3	D3	-	-	4	4	PE5	I/O	FT	PE5	TRACED2/FSMC_A21	-
B4	E3	-	-	5	5	PE6	I/O	FT	PE6	TRACED3/FSMC_A22	-
C2	B2	C6	1	6	6	V_{BAT}	S	-	V_{BAT}	-	-
A1	A2	C8	2	7	7	PC13-TAMPER-RTC(5)	I/O	-	PC13(6)	TAMPER-RTC	-
B1	A1	B8	3	8	8	PC14-OSC32_IN(5)	I/O	-	PC14(6)	OSC32_IN	-
C1	B1	B7	4	9	9	PC15-OSC32_OUT(5)	I/O	-	PC15(6)	OSC32_OUT	-
C3	-	-	-	-	10	PF0	I/O	FT	PF0	FSMC_A0	-
C4	-	-	-	-	11	PF1	I/O	FT	PF1	FSMC_A1	-
D4	-	-	-	-	12	PF2	I/O	FT	PF2	FSMC_A2	-
E2	-	-	-	-	13	PF3	I/O	FT	PF3	FSMC_A3	-
E3	-	-	-	-	14	PF4	I/O	FT	PF4	FSMC_A4	-
E4	-	-	-	-	15	PF5	I/O	FT	PF5	FSMC_A5	-
D2	C2	-	-	10	16	V_{SS_5}	S	-	V_{SS_5}	-	-
D3	D2	-	-	11	17	V_{DD_5}	S	-	V_{DD_5}	-	-
F3	-	-	-	-	18	PF6	I/O	-	PF6	ADC3_IN4/FSMC_NIORD	-
F2	-	-	-	-	19	PF7	I/O	-	PF7	ADC3_IN5/FSMC_NREG	-
G3	-	-	-	-	20	PF8	I/O	-	PF8	ADC3_IN6/FSMC_NIOWR	-
G2	-	-	-	-	21	PF9	I/O	-	PF9	ADC3_IN7/FSMC_CD	-
G1	-	-	-	-	22	PF10	I/O	-	PF10	ADC3_IN8/FSMC_INTR	-
D1	C1	D8	5	12	23	OSC_IN	I	-	OSC_IN	-	-
E1	D1	D7	6	13	24	OSC_OUT	O	-	OSC_OUT	-	-
F1	E1	C7	7	14	25	NRST	I/O	-	NRST	-	-
H1	F1	E8	8	15	26	PC0	I/O	-	PC0	ADC123_IN10	-
H2	F2	F8	9	16	27	PC1	I/O	-	PC1	ADC123_IN11	-
H3	E2	D6	10	17	28	PC2	I/O	-	PC2	ADC123_IN12	-

Table 5. High-density STM32F103xC/D/E pin definitions (continued)

Pins						Pin name	Type(1)	I / O Level(2)	Main function(3) (after reset)	Alternate functions(4)	
LFBGA144	LFBGA100	WLCSP64	LQFP64	LQFP100	LQFP144					Default	Remap
H4	F3	-	11	18	29	PC3(7)	I/O	-	PC3	ADC123_IN13	-
J1	G1	E7	12	19	30	V_{SSA}	S	-	V_{SSA}	-	-
K1	H1	-	-	20	31	V_{REF-}	S	-	V_{REF-}	-	-
L1	J1	F7 (8)	-	21	32	V_{REF+}	S	-	V_{REF+}	-	-
M1	K1	G8	13	22	33	V_{DDA}	S	-	V_{DDA}	-	-
J2	G2	F6	14	23	34	PA0-WKUP	I/O	-	PA0	WKUP/USART2_CTS(9) ADC123_IN0 TIM2_CH1_ETR TIM5_CH1/TIM8_ETR	-
K2	H2	E6	15	24	35	PA1	I/O	-	PA1	USART2_RTS(9) ADC123_IN1/ TIM5_CH2/TIM2_CH2(9)	-
L2	J2	H8	16	25	36	PA2	I/O	-	PA2	USART2_TX(9)/TIM5_CH3 ADC123_IN2/ TIM2_CH3 (9)	-
M2	K2	G7	17	26	37	PA3	I/O	-	PA3	USART2_RX(9)/TIM5_CH4 ADC123_IN3/TIM2_CH4(9)	-
G4	E4	F5	18	27	38	V_{SS_4}	S	-	V_{SS_4}	-	-
F4	F4	G6	19	28	39	V_{DD_4}	S	-	V_{DD_4}	-	-
J3	G3	H7	20	29	40	PA4	I/O	-	PA4	SPI1_NSS(9)/ USART2_CK(9) DAC_OUT1/ADC12_IN4	-
K3	H3	E5	21	30	41	PA5	I/O	-	PA5	SPI1_SCK(9) DAC_OUT2 ADC12_IN5	-
L3	J3	G5	22	31	42	PA6	I/O	-	PA6	SPI1_MISO(9) TIM8_BKIN/ADC12_IN6 TIM3_CH1(9)	TIM1_BKIN
M3	K3	G4	23	32	43	PA7	I/O	-	PA7	SPI1_MOSI(9)/ TIM8_CH1N/ADC12_IN7 TIM3_CH2(9)	TIM1_CH1N
J4	G4	H6	24	33	44	PC4	I/O	-	PC4	ADC12_IN14	-
K4	H4	H5	25	34	45	PC5	I/O	-	PC5	ADC12_IN15	-
L4	J4	H4	26	35	46	PB0	I/O	-	PB0	ADC12_IN8/TIM3_CH3 TIM8_CH2N	TIM1_CH2N
M4	K4	F4	27	36	47	PB1	I/O	-	PB1	ADC12_IN9/TIM3_CH4(9) TIM8_CH3N	TIM1_CH3N

Table 5. High-density STM32F103xC/D/E pin definitions (continued)

Pins						Pin name	Type(1)	I / O Level(2)	Main function(3) (after reset)	Alternate functions(4)	
LFBGA144	LFBGA100	WLCSP64	LQFP64	LQFP100	LQFP144					Default	Remap
J5	G5	H3	28	37	48	PB2	I/O	FT	PB2/BOOT1	-	-
M5	-	-	-	-	49	PF11	I/O	FT	PF11	FSMC_NIOS16	-
L5	-	-	-	-	50	PF12	I/O	FT	PF12	FSMC_A6	-
H5	-	-	-	-	51	V_{SS_6}	S	-	V_{SS_6}	-	-
G5	-	-	-	-	52	V_{DD_6}	S	-	V_{DD_6}	-	-
K5	-	-	-	-	53	PF13	I/O	FT	PF13	FSMC_A7	-
M6	-	-	-	-	54	PF14	I/O	FT	PF14	FSMC_A8	-
L6	-	-	-	-	55	PF15	I/O	FT	PF15	FSMC_A9	-
K6	-	-	-	-	56	PG0	I/O	FT	PG0	FSMC_A10	-
J6	-	-	-	-	57	PG1	I/O	FT	PG1	FSMC_A11	-
M7	H5	-	-	38	58	PE7	I/O	FT	PE7	FSMC_D4	TIM1_ETR
L7	J5	-	-	39	59	PE8	I/O	FT	PE8	FSMC_D5	TIM1_CH1N
K7	K5	-	-	40	60	PE9	I/O	FT	PE9	FSMC_D6	TIM1_CH1
H6	-	-	-	-	61	V_{SS_7}	S	-	V_{SS_7}	-	-
G6	-	-	-	-	62	V_{DD_7}	S	-	V_{DD_7}	-	-
J7	G6	-	-	41	63	PE10	I/O	FT	PE10	FSMC_D7	TIM1_CH2N
H8	H6	-	-	42	64	PE11	I/O	FT	PE11	FSMC_D8	TIM1_CH2
J8	J6	-	-	43	65	PE12	I/O	FT	PE12	FSMC_D9	TIM1_CH3N
K8	K6	-	-	44	66	PE13	I/O	FT	PE13	FSMC_D10	TIM1_CH3
L8	G7	-	-	45	67	PE14	I/O	FT	PE14	FSMC_D11	TIM1_CH4
M8	H7	-	-	46	68	PE15	I/O	FT	PE15	FSMC_D12	TIM1_BKIN
M9	J7	G3	29	47	69	PB10	I/O	FT	PB10	I2C2_SCL/USART3_TX(9)	TIM2_CH3
M10	K7	F3	30	48	70	PB11	I/O	FT	PB11	I2C2_SDA/USART3_RX(9)	TIM2_CH4
H7	E7	H2	31	49	71	V_{SS_1}	S	-	V_{SS_1}	-	-
G7	F7	H1	32	50	72	V_{DD_1}	S	-	V_{DD_1}	-	-
M11	K8	G2	33	51	73	PB12	I/O	FT	PB12	SPI2_NSS/I2S2_WS/ I2C2_SMBA/ USART3_CK(9)/ TIM1_BKIN(9)	-
M12	J8	G1	34	52	74	PB13	I/O	FT	PB13	SPI2_SCK/I2S2_CK USART3_CTS(9)/ TIM1_CH1N	-

Table 5. High-density STM32F103xC/D/E pin definitions (continued)

Pins						Pin name	Type(1)	I / O Level(2)	Main function(3) (after reset)	Alternate functions(4)	
LFBGA144	LFBGA100	WLCSP64	LQFP64	LQFP100	LQFP144					Default	Remap
L11	H8	F2	35	53	75	PB14	I/O	FT	PB14	SPI2_MISO/TIM1_CH2N USART3_RTS(9)/	-
L12	G8	F1	36	54	76	PB15	I/O	FT	PB15	SPI2_MOSI/I2S2_SD TIM1_CH3N(9)/	-
L9	K9	-	-	55	77	PD8	I/O	FT	PD8	FSMC_D13	USART3_TX
K9	J9	-	-	56	78	PD9	I/O	FT	PD9	FSMC_D14	USART3_RX
J9	H9	-	-	57	79	PD10	I/O	FT	PD10	FSMC_D15	USART3_CK
H9	G9	-	-	58	80	PD11	I/O	FT	PD11	FSMC_A16	USART3_CTS
L10	K10	-	-	59	81	PD12	I/O	FT	PD12	FSMC_A17	TIM4_CH1 / USART3_RTS
K10	J10	-	-	60	82	PD13	I/O	FT	PD13	FSMC_A18	TIM4_CH2
G8	-	-	-	-	83	V_{SS_8}	S	-	V_{SS_8}	-	-
F8	-	-	-	-	84	V_{DD_8}	S	-	V_{DD_8}	-	-
K11	H10	-	-	61	85	PD14	I/O	FT	PD14	FSMC_D0	TIM4_CH3
K12	G10	-	-	62	86	PD15	I/O	FT	PD15	FSMC_D1	TIM4_CH4
J12	-	-	-	-	87	PG2	I/O	FT	PG2	FSMC_A12	-
J11	-	-	-	-	88	PG3	I/O	FT	PG3	FSMC_A13	-
J10	-	-	-	-	89	PG4	I/O	FT	PG4	FSMC_A14	-
H12	-	-	-	-	90	PG5	I/O	FT	PG5	FSMC_A15	-
H11	-	-	-	-	91	PG6	I/O	FT	PG6	FSMC_INT2	-
H10	-	-	-	-	92	PG7	I/O	FT	PG7	FSMC_INT3	-
G11	-	-	-	-	93	PG8	I/O	FT	PG8	-	-
G10	-	-	-	-	94	V_{SS_9}	S	-	V_{SS_9}	-	-
F10	-	-	-	-	95	V_{DD_9}	S	-	V_{DD_9}	-	-
G12	F10	E1	37	63	96	PC6	I/O	FT	PC6	I2S2_MCK/ TIM8_CH1/SDIO_D6	TIM3_CH1
F12	E10	E2	38	64	97	PC7	I/O	FT	PC7	I2S3_MCK/ TIM8_CH2/SDIO_D7	TIM3_CH2
F11	F9	E3	39	65	98	PC8	I/O	FT	PC8	TIM8_CH3/SDIO_D0	TIM3_CH3
E11	E9	D1	40	66	99	PC9	I/O	FT	PC9	TIM8_CH4/SDIO_D1	TIM3_CH4
E12	D9	E4	41	67	100	PA8	I/O	FT	PA8	USART1_CK/ TIM1_CH1(9)/MCO	-

Table 5. High-density STM32F103xC/D/E pin definitions (continued)

Pins						Pin name	Type(1)	I / O Level(2)	Main function(3) (after reset)	Alternate functions(4)	
LFBGA144	LFBGA100	WLCSP64	LQFP64	LQFP100	LQFP144					Default	Remap
D12	C9	D2	42	68	101	PA9	I/O	FT	PA9	USART1_TX(9)/ TIM1_CH2(9)	-
D11	D10	D3	43	69	102	PA10	I/O	FT	PA10	USART1_RX(9)/ TIM1_CH3(9)	-
C12	C10	C1	44	70	103	PA11	I/O	FT	PA11	USART1_CTS/USBDM CAN_RX(9)/TIM1_CH4(9)	-
B12	B10	C2	45	71	104	PA12	I/O	FT	PA12	USART1_RTS/USBDP/ CAN_TX(9)/TIM1_ETR(9)	-
A12	A10	D4	46	72	105	PA13	I/O	FT	JTMS-SWDIO	-	PA13
C11	F8	-	-	73	106	Not connected					-
G9	E6	B1	47	74	107	V_{SS_2}	S	-	V_{SS_2}	-	-
F9	F6	A1	48	75	108	V_{DD_2}	S	-	V_{DD_2}	-	-
A11	A9	B2	49	76	109	PA14	I/O	FT	JTCK-SWCLK	-	PA14
A10	A8	C3	50	77	110	PA15	I/O	FT	JTDI	SPI3_NSS/ I2S3_WS	TIM2_CH1_ETR PA15 / SPI1_NSS
B11	B9	A2	51	78	111	PC10	I/O	FT	PC10	UART4_TX/SDIO_D2	USART3_TX
B10	B8	B3	52	79	112	PC11	I/O	FT	PC11	UART4_RX/SDIO_D3	USART3_RX
C10	C8	C4	53	80	113	PC12	I/O	FT	PC12	UART5_TX/SDIO_CK	USART3_CK
E10	D8	D8	5	81	114	PD0	I/O	FT	OSC_IN(10)	FSMC_D2(11)	CAN_RX
D10	E8	D7	6	82	115	PD1	I/O	FT	OSC_OUT(10)	FSMC_D3(11)	CAN_TX
E9	B7	A3	54	83	116	PD2	I/O	FT	PD2	TIM3_ETR/UART5_RX SDIO_CMD	-
D9	C7	-	-	84	117	PD3	I/O	FT	PD3	FSMC_CLK	USART2_CTS
C9	D7	-	-	85	118	PD4	I/O	FT	PD4	FSMC_NOE	USART2_RTS
B9	B6	-	-	86	119	PD5	I/O	FT	PD5	FSMC_NWE	USART2_TX
E7	-	-	-	-	120	V_{SS_10}	S	-	V_{SS_10}	-	-
F7	-	-	-	-	121	V_{DD_10}	S	-	V_{DD_10}	-	-
A8	C6	-	-	87	122	PD6	I/O	FT	PD6	FSMC_NWAIT	USART2_RX
A9	D6	-	-	88	123	PD7	I/O	FT	PD7	FSMC_NE1/FSMC_NCE2	USART2_CK
E8	-	-	-	-	124	PG9	I/O	FT	PG9	FSMC_NE2/FSMC_NCE3	-
D8	-	-	-	-	125	PG10	I/O	FT	PG10	FSMC_NCE4_1/ FSMC_NE3	-

Table 5. High-density STM32F103xC/D/E pin definitions (continued)

Pins						Pin name	Type(1)	I / O Level(2)	Main function(3) (after reset)	Alternate functions(4)	
LFBGA144	LFBGA100	WLCSP64	LQFP64	LQFP100	LQFP144					Default	Remap
C8	-	-	-	-	126	PG11	I/O	FT	PG11	FSMC_NCE4_2	-
B8	-	-	-	-	127	PG12	I/O	FT	PG12	FSMC_NE4	-
D7	-	-	-	-	128	PG13	I/O	FT	PG13	FSMC_A24	-
C7	-	-	-	-	129	PG14	I/O	FT	PG14	FSMC_A25	-
E6	-	-	-	-	130	V_{SS_11}	S	-	V_{SS_11}	-	-
F6	-	-	-	-	131	V_{DD_11}	S	-	V_{DD_11}	-	-
B7	-	-	-	-	132	PG15	I/O	FT	PG15	-	-
A7	A7	A4	55	89	133	PB3	I/O	FT	JTDO	SPI3_SCK / I2S3_CK/	PB3/TRACESWO TIM2_CH2 / SPI1_SCK
A6	A6	B4	56	90	134	PB4	I/O	FT	NJTRST	SPI3_MISO	PB4 / TIM3_CH1 SPI1_MISO
B6	C5	A5	57	91	135	PB5	I/O	-	PB5	I2C1_SMBA/ SPI3_MOSI I2S3_SD	TIM3_CH2 / SPI1_MOSI
C6	B5	B5	58	92	136	PB6	I/O	FT	PB6	I2C1_SCL(9)/ TIM4_CH1(9)	USART1_TX
D6	A5	C5	59	93	137	PB7	I/O	FT	PB7	I2C1_SDA(9) / FSMC_NADV / TIM4_CH2(9)	USART1_RX
D5	D5	A6	60	94	138	BOOT0	I	-	BOOT0	-	-
C5	B4	D5	61	95	139	PB8	I/O	FT	PB8	TIM4_CH3(9)/SDIO_D4	I2C1_SCL/ CAN_RX
B5	A4	B6	62	96	140	PB9	I/O	FT	PB9	TIM4_CH4(9)/SDIO_D5	I2C1_SDA / CAN_TX
A5	D4	-	-	97	141	PE0	I/O	FT	PE0	TIM4_ETR / FSMC_NBL0	-
A4	C4	-	-	98	142	PE1	I/O	FT	PE1	FSMC_NBL1	-
E5	E5	A7	63	99	143	V_{SS_3}	S	-	V_{SS_3}	-	-
F5	F5	A8	64	100	144	V_{DD_3}	S	-	V_{DD_3}	-	-

1. I = input, O = output, S = supply.
2. FT = 5 V tolerant.
3. Function availability depends on the chosen device.
4. If several peripherals share the same I/O pin, to avoid conflict between these alternate functions only one peripheral should be enabled at a time through the peripheral clock enable bit (in the corresponding RCC peripheral clock enable register).

5. PC13, PC14 and PC15 are supplied through the power switch. Since the switch only sinks a limited amount of current (3 mA), the use of GPIOs PC13 to PC15 in output mode is limited: the speed should not exceed 2 MHz with a maximum load of 30 pF and these IOs must not be used as a current source (e.g. to drive an LED).
6. Main function after the first backup domain power-up. Later on, it depends on the contents of the Backup registers even after reset (because these registers are not reset by the main reset). For details on how to manage these IOs, refer to the Battery backup domain and BKP register description sections in the STM32F10xxx reference manual, available from the STMicroelectronics website: www.st.com.
7. In the WCLSP64 package, the PC3 I/O pin is not bonded and it must be configured by software to output mode (Push-pull) and writing 0 to the data register in order to avoid an extra consumption during low-power modes.
8. Unlike in the LQFP64 package, there is no PC3 in the WLCSP package. The V_{REF+} functionality is provided instead.
9. This alternate function can be remapped by software to some other port pins (if available on the used package). For more details, refer to the Alternate function I/O and debug configuration section in the STM32F10xxx reference manual, available from the STMicroelectronics website: www.st.com.
10. For the WCLSP64/LQFP64 package, the pins number 5 and 6 are configured as OSC_IN/OSC_OUT after reset, however the functionality of PD0 and PD1 can be remapped by software on these pins. For the LQFP100/BGA100 and LQFP144/BGA144 packages, PD0 and PD1 are available by default, so there is no need for remapping. For more details, refer to Alternate function I/O and debug configuration section in the STM32F10xxx reference manual.
11. For devices delivered in LQFP64 packages, the FSMC function is not available.

Table 6. FSMC pin definition

Pins	FSMC					LQFP100 BGA100[1]
	CF	CF/IDE	NOR/PSRAM/ SRAM	NOR/PSRAM Mux	NAND 16 bit	
PE2	-	-	A23	A23	-	Yes
PE3	-	-	A19	A19	-	Yes
PE4	-	-	A20	A20	-	Yes
PE5	-	-	A21	A21	-	Yes
PE6	-	-	A22	A22	-	Yes
PF0	A0	A0	A0	-	-	-
PF1	A1	A1	A1	-	-	-
PF2	A2	A2	A2	-	-	-
PF3	A3	-	A3	-	-	-
PF4	A4	-	A4	-	-	-
PF5	A5	-	A5	-	-	-
PF6	NIORD	NIORD	-	-	-	-
PF7	NREG	NREG	-	-	-	-
PF8	NIOWR	NIOWR	-	-	-	-
PF9	CD	CD	-	-	-	-
PF10	INTR	INTR	-	-	-	-
PF11	NIOS16	NIOS16	-	-	-	-
PF12	A6	-	A6	-	-	-
PF13	A7	-	A7	-	-	-
PF14	A8	-	A8	-	-	-
PF15	A9	-	A9	-	-	-
PG0	A10	-	A10	-	-	-
PG1	-	-	A11	-	-	-
PE7	D4	D4	D4	DA4	D4	Yes
PE8	D5	D5	D5	DA5	D5	Yes
PE9	D6	D6	D6	DA6	D6	Yes
PE10	D7	D7	D7	DA7	D7	Yes
PE11	D8	D8	D8	DA8	D8	Yes
PE12	D9	D9	D9	DA9	D9	Yes
PE13	D10	D10	D10	DA10	D10	Yes
PE14	D11	D11	D11	DA11	D11	Yes
PE15	D12	D12	D12	DA12	D12	Yes
PD8	D13	D13	D13	DA13	D13	Yes

Table 6. FSMC pin definition (continued)

Pins	FSMC					LQFP100 BGA100[1]
	CF	CF/IDE	NOR/PSRAM/ SRAM	NOR/PSRAM Mux	NAND 16 bit	
PD9	D14	D14	D14	DA14	D14	Yes
PD10	D15	D15	D15	DA15	D15	Yes
PD11	-	-	A16	A16	CLE	Yes
PD12	-	-	A17	A17	ALE	Yes
PD13	-	-	A18	A18	-	Yes
PD14	D0	D0	D0	DA0	D0	Yes
PD15	D1	D1	D1	DA1	D1	Yes
PG2	-	-	A12	-	-	-
PG3	-	-	A13	-	-	-
PG4	-	-	A14	-	-	-
PG5	-	-	A15	-	-	-
PG6	-	-	-	-	INT2	-
PG7	-	-	-	-	INT3	-
PD0	D2	D2	D2	DA2	D2	Yes
PD1	D3	D3	D3	DA3	D3	Yes
PD3	-	-	CLK	CLK	-	Yes
PD4	NOE	NOE	NOE	NOE	NOE	Yes
PD5	NWE	NWE	NWE	NWE	NWE	Yes
PD6	NWAIT	NWAIT	NWAIT	NWAIT	NWAIT	Yes
PD7	-	-	NE1	NE1	NCE2	Yes
PG9	-	-	NE2	NE2	NCE3	-
PG10	NCE4_1	NCE4_1	NE3	NE3	-	-
PG11	NCE4_2	NCE4_2	-	-	-	-
PG12	-	-	NE4	NE4	-	-
PG13	-	-	A24	A24	-	-
PG14	-	-	A25	A25	-	-
PB7	-	-	NADV	NADV	-	Yes
PE0	-	-	NBL0	NBL0	-	Yes
PE1	-	-	NBL1	NBL1	-	Yes

1. Ports F and G are not available in devices delivered in 100-pin packages.

4 Memory mapping

The memory map is shown in *Figure 9*.

Figure 9. Memory map

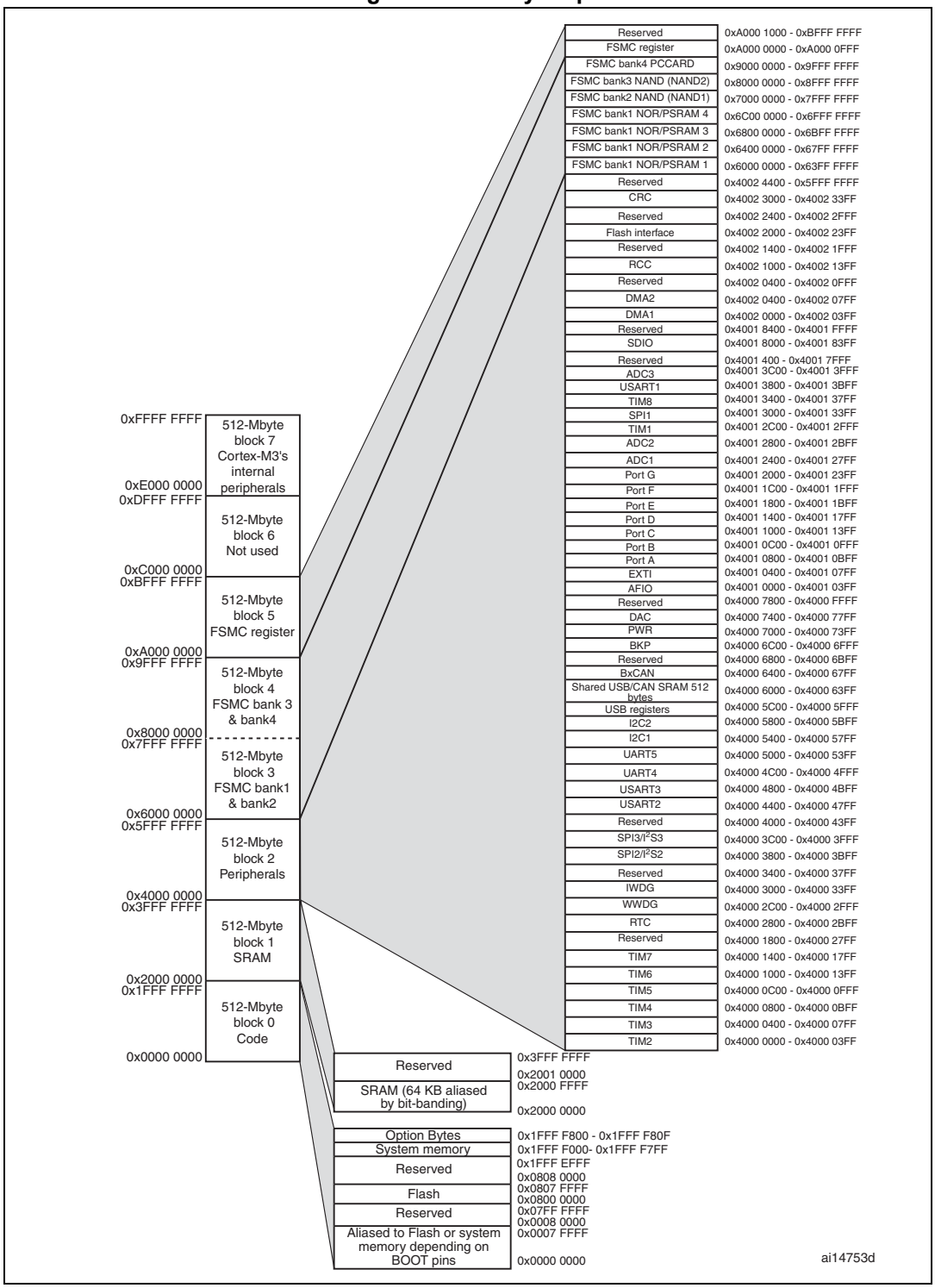

5 Electrical characteristics

5.1 Parameter conditions

Unless otherwise specified, all voltages are referenced to V_{SS}.

5.1.1 Minimum and maximum values

Unless otherwise specified the minimum and maximum values are guaranteed in the worst conditions of ambient temperature, supply voltage and frequencies by tests in production on 100% of the devices with an ambient temperature at T_A = 25 °C and T_A = $T_A$max (given by the selected temperature range).

Data based on characterization results, design simulation and/or technology characteristics are indicated in the table footnotes and are not tested in production. Based on characterization, the minimum and maximum values refer to sample tests and represent the mean value plus or minus three times the standard deviation (mean±3Σ).

5.1.2 Typical values

Unless otherwise specified, typical data are based on T_A = 25 °C, V_{DD} = 3.3 V (for the 2 V ≤ V_{DD} ≤ 3.6 V voltage range). They are given only as design guidelines and are not tested.

Typical ADC accuracy values are determined by characterization of a batch of samples from a standard diffusion lot over the full temperature range, where 95% of the devices have an error less than or equal to the value indicated (mean±2Σ).

5.1.3 Typical curves

Unless otherwise specified, all typical curves are given only as design guidelines and are not tested.

5.1.4 Loading capacitor

The loading conditions used for pin parameter measurement are shown in *Figure 10*.

5.1.5 Pin input voltage

The input voltage measurement on a pin of the device is described in *Figure 11*.

Figure 10. Pin loading conditions

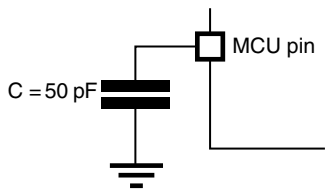

Figure 11. Pin input voltage

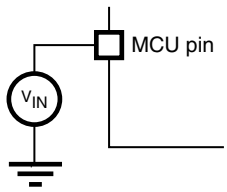

5.1.6 Power supply scheme

Figure 12. Power supply scheme

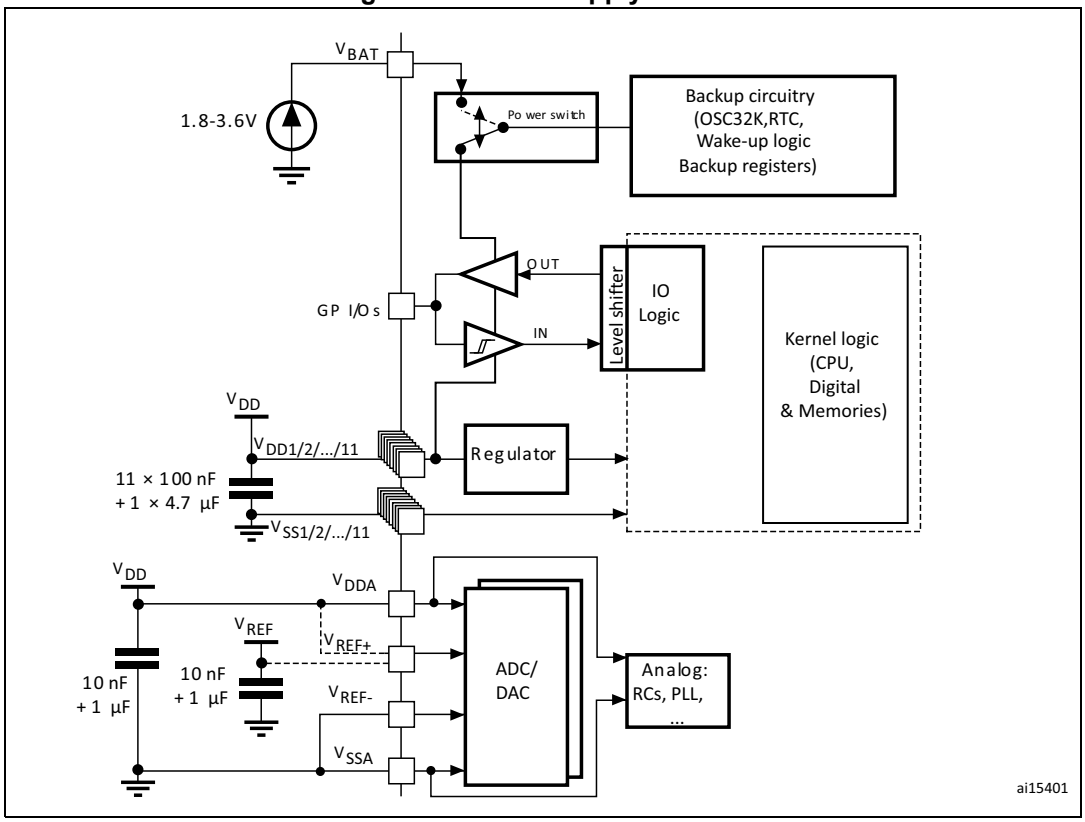

Caution: In *Figure 12*, the 4.7 µF capacitor must be connected to V_{DD3}.

5.1.7 Current consumption measurement

Figure 13. Current consumption measurement scheme

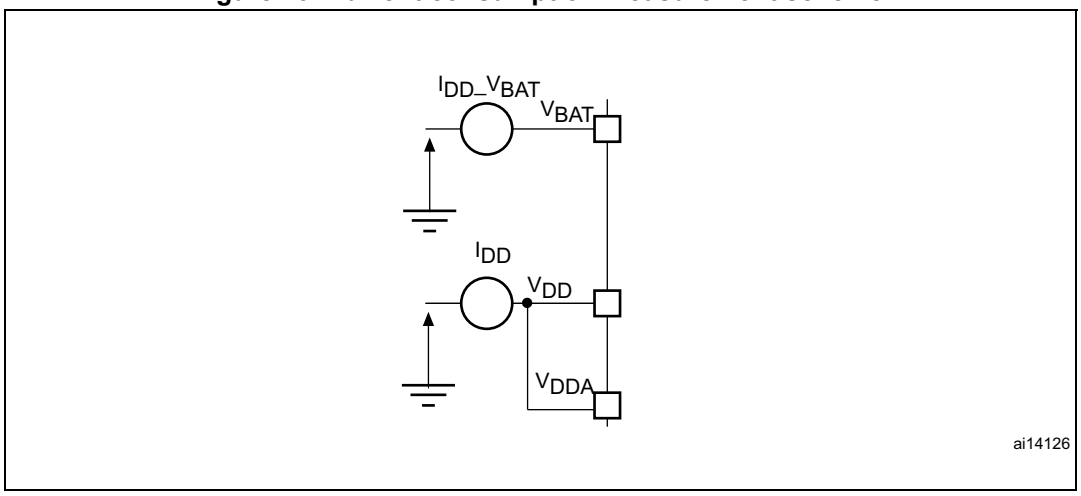

5.2 Absolute maximum ratings

Stresses above the absolute maximum ratings listed in *Table 7: Voltage characteristics*, *Table 8: Current characteristics*, and *Table 9: Thermal characteristics* may cause permanent damage to the device. These are stress ratings only and functional operation of the device at these conditions is not implied. Exposure to maximum rating conditions for extended periods may affect device reliability.

Table 7. Voltage characteristics

Symbol	Ratings	Min	Max	Unit
$V_{DD}–V_{SS}$	External main supply voltage (including V_{DDA} and V_{DD})(1)	–0.3	4.0	V
V_{IN}(2)	Input voltage on five volt tolerant pin	V_{SS} –0.3	V_{DD} + 4.0	
	Input voltage on any other pin	V_{SS} –0.3	4.0	
$\|\Delta V_{DDx}\|$	Variations between different V_{DD} power pins	-	50	mV
$\|V_{SSX} - V_{SS}\|$	Variations between all the different ground pins(3)	-	50	
$V_{ESD(HBM)}$	Electrostatic discharge voltage (human body model)	see *Section 5.3.12: Absolute maximum ratings (electrical sensitivity)*		-

1. All main power (V_{DD}, V_{DDA}) and ground (V_{SS}, V_{SSA}) pins must always be connected to the external power supply, in the permitted range.
2. V_{IN} maximum must always be respected. Refer to *Table 8: Current characteristics* for the maximum allowed injected current values.
3. Include V_{REF-} pin.

Table 8. Current characteristics

Symbol	Ratings	Max.	Unit
I_{VDD}	Total current into V_{DD}/V_{DDA} power lines (source)(1)	150	mA
I_{VSS}	Total current out of V_{SS} ground lines (sink)(1)	150	
I_{IO}	Output current sunk by any I/O and control pin	25	
	Output current source by any I/Os and control pin	–25	
$I_{INJ(PIN)}$(2)	Injected current on five volt tolerant pins(3)	-5/+0	
	Injected current on any other pin(4)	± 5	
$\Sigma I_{INJ(PIN)}$	Total injected current (sum of all I/O and control pins)(5)	± 25	

1. All main power (V_{DD}, V_{DDA}) and ground (V_{SS}, V_{SSA}) pins must always be connected to the external power supply, in the permitted range.
2. Negative injection disturbs the analog performance of the device. See note 3 below *Table 62 on page 108*.
3. Positive injection is not possible on these I/Os. A negative injection is induced by $V_{IN}<V_{SS}$. $I_{INJ(PIN)}$ must never be exceeded. Refer to *Table 7: Voltage characteristics* for the maximum allowed input voltage values.
4. A positive injection is induced by $V_{IN}>V_{DD}$ while a negative injection is induced by $V_{IN}<V_{SS}$. $I_{INJ(PIN)}$ must never be exceeded. Refer to *Table 7: Voltage characteristics* for the maximum allowed input voltage values.
5. When several inputs are submitted to a current injection, the maximum $\Sigma I_{INJ(PIN)}$ is the absolute sum of the positive and negative injected currents (instantaneous values).

Table 9. Thermal characteristics

Symbol	Ratings	Value	Unit
T_{STG}	Storage temperature range	–65 to +150	°C
T_J	Maximum junction temperature	150	°C

5.3 Operating conditions

5.3.1 General operating conditions

Table 10. General operating conditions

Symbol	Parameter	Conditions	Min	Max	Unit
f_{HCLK}	Internal AHB clock frequency	-	0	72	MHz
f_{PCLK1}	Internal APB1 clock frequency	-	0	36	
f_{PCLK2}	Internal APB2 clock frequency	-	0	72	
V_{DD}	Standard operating voltage	-	2	3.6	V
V_{DDA}(1)	Analog operating voltage (ADC not used)	Must be the same potential as V_{DD}(2)	2	3.6	V
	Analog operating voltage (ADC used)		2.4	3.6	
V_{BAT}	Backup operating voltage	-	1.8	3.6	V
P_D	Power dissipation at T_A = 85 °C for suffix 6 or T_A = 105 °C for suffix 7(3)	LQFP144	-	666	mW
		LQFP100	-	434	
		LQFP64	-	444	
		LFBGA100	-	500	
		LFBGA144	-	500	
		WLCSP64	-	400	
T_A	Ambient temperature for 6 suffix version	Maximum power dissipation	-40	85	°C
		Low-power dissipation(4)	-40	105	
	Ambient temperature for 7 suffix version	Maximum power dissipation	-40	105	°C
		Low-power dissipation(4)	-40	125	
T_J	Junction temperature range	6 suffix version	-40	105	°C
		7 suffix version	-40	125	

1. When the ADC is used, refer to *Table 59: ADC characteristics*.
2. It is recommended to power V_{DD} and V_{DDA} from the same source. A maximum difference of 300 mV between V_{DD} and V_{DDA} can be tolerated during power-up and operation.
3. If T_A is lower, higher P_D values are allowed as long as T_J does not exceed $T_J$max (see *Table 6.7: Thermal characteristics on page 132*).
4. In low-power dissipation state, T_A can be extended to this range as long as T_J does not exceed $T_J$max (see *Table 6.7: Thermal characteristics on page 132*).

5.3.2 Operating conditions at power-up / power-down

The parameters given in *Table 11* are derived from tests performed under the ambient temperature condition summarized in *Table 10*.

Table 11. Operating conditions at power-up / power-down

Symbol	Parameter	Conditions	Min	Max	Unit
t_{VDD}	V_{DD} rise time rate	-	0	∞	µs/V
	V_{DD} fall time rate		20	∞	

5.3.3 Embedded reset and power control block characteristics

The parameters given in *Table 12* are derived from tests performed under ambient temperature and V_{DD} supply voltage conditions summarized in *Table 10*.

Table 12. Embedded reset and power control block characteristics

Symbol	Parameter	Conditions	Min	Typ	Max	Unit
V_{PVD}	Programmable voltage detector level selection	PLS[2:0]=000 (rising edge)	2.1	2.18	2.26	V
		PLS[2:0]=000 (falling edge)	2	2.08	2.16	
		PLS[2:0]=001 (rising edge)	2.19	2.28	2.37	
		PLS[2:0]=001 (falling edge)	2.09	2.18	2.27	
		PLS[2:0]=010 (rising edge)	2.28	2.38	2.48	
		PLS[2:0]=010 (falling edge)	2.18	2.28	2.38	
		PLS[2:0]=011 (rising edge)	2.38	2.48	2.58	
		PLS[2:0]=011 (falling edge)	2.28	2.38	2.48	
		PLS[2:0]=100 (rising edge)	2.47	2.58	2.69	
		PLS[2:0]=100 (falling edge)	2.37	2.48	2.59	
		PLS[2:0]=101 (rising edge)	2.57	2.68	2.79	
		PLS[2:0]=101 (falling edge)	2.47	2.58	2.69	
		PLS[2:0]=110 (rising edge)	2.66	2.78	2.9	
		PLS[2:0]=110 (falling edge)	2.56	2.68	2.8	
		PLS[2:0]=111 (rising edge)	2.76	2.88	3	
		PLS[2:0]=111 (falling edge)	2.66	2.78	2.9	
$V_{PVDhyst}$(2)	PVD hysteresis	-	-	100	-	mV
$V_{POR/PDR}$	Power on/power down reset threshold	Falling edge	1.8(1)	1.88	1.96	V
		Rising edge	1.84	1.92	2.0	
$V_{PDRhyst}$(2)	PDR hysteresis	-	-	40	-	mV
$T_{RSTTEMPO}$(2)	Reset temporization	-	1	2.5	4.5	ms

1. The product behavior is guaranteed by design down to the minimum $V_{POR/PDR}$ value.
2. Guaranteed by design.

5.3.4 Embedded reference voltage

The parameters given in *Table 13* are derived from tests performed under ambient temperature and V_{DD} supply voltage conditions summarized in *Table 10*.

Table 13. Embedded internal reference voltage

Symbol	Parameter	Conditions	Min	Typ	Max	Unit
V_{REFINT}	Internal reference voltage	–40 °C < T_A < +105 °C	1.16	1.20	1.26	V
		–40 °C < T_A < +85 °C	1.16	1.20	1.24	
$T_{S_vrefint}$(1)	ADC sampling time when reading the internal reference voltage	-	-	5.1	17.1(2)	µs
V_{RERINT}(2)	Internal reference voltage spread over the temperature range	V_{DD} = 3 V ±10 mV	-	-	10	mV
T_{Coeff}(2)	Temperature coefficient	-	-	-	100	ppm/°C

1. Shortest sampling time can be determined in the application by multiple iterations.
2. Guaranteed by design.

5.3.5 Supply current characteristics

The current consumption is a function of several parameters and factors such as the operating voltage, ambient temperature, I/O pin loading, device software configuration, operating frequencies, I/O pin switching rate, program location in memory and executed binary code.
The current consumption is measured as described in *Figure 13: Current consumption measurement scheme*.
All Run-mode current consumption measurements given in this section are performed with a reduced code that gives a consumption equivalent to Dhrystone 2.1 code.

Maximum current consumption

The MCU is placed under the following conditions:

- All I/O pins are in input mode with a static value at V_{DD} or V_{SS} (no load)
- All peripherals are disabled except when explicitly mentioned
- The Flash memory access time is adjusted to the f_{HCLK} frequency (0 wait state from 0 to 24 MHz, 1 wait state from 24 to 48 MHz and 2 wait states above)
- Prefetch in ON (reminder: this bit must be set before clock setting and bus prescaling)
- When the peripherals are enabled $f_{PCLK1} = f_{HCLK}/2$, $f_{PCLK2} = f_{HCLK}$

The parameters given in *Table 14*, *Table 15* and *Table 16* are derived from tests performed under ambient temperature and V_{DD} supply voltage conditions summarized in *Table 10*.

Table 14. Maximum current consumption in Run mode, code with data processing running from Flash

Symbol	Parameter	Conditions	f_{HCLK}	Max(1)		Unit
				T_A = 85 °C	T_A = 105 °C	
I_{DD}	Supply current in Run mode	External clock(2), all peripherals enabled	72 MHz	69	70	mA
			48 MHz	50	50.5	
			36 MHz	39	39.5	
			24 MHz	27	28	
			16 MHz	20	20.5	
			8 MHz	11	11.5	
		External clock(2), all peripherals disabled	72 MHz	37	37.5	
			48 MHz	28	28.5	
			36 MHz	22	22.5	
			24 MHz	16.5	17	
			16 MHz	12.5	13	
			8 MHz	8	8	

1. Guaranteed by characterization results.
2. External clock is 8 MHz and PLL is on when f_{HCLK} > 8 MHz.

Table 15. Maximum current consumption in Run mode, code with data processing running from RAM

Symbol	Parameter	Conditions	f_{HCLK}	Max(1)		Unit
				T_A = 85 °C	T_A = 105 °C	
I_{DD}	Supply current in Run mode	External clock(2), all peripherals enabled	72 MHz	66	67	mA
			48 MHz	43.5	45.5	
			36 MHz	33	35	
			24 MHz	23	24.5	
			16 MHz	16	18	
			8 MHz	9	10.5	
		External clock(2), all peripherals disabled	72 MHz	33	33.5	
			48 MHz	23	23.5	
			36 MHz	18	18.5	
			24 MHz	13	13.5	
			16 MHz	10	10.5	
			8 MHz	6	6.5	

1. Guaranteed by characterization results at V_{DD} max, f_{HCLK} max.
2. External clock is 8 MHz and PLL is on when f_{HCLK} > 8 MHz.

Figure 14. Typical current consumption in Run mode versus frequency (at 3.6 V) - code with data processing running from RAM, peripherals enabled

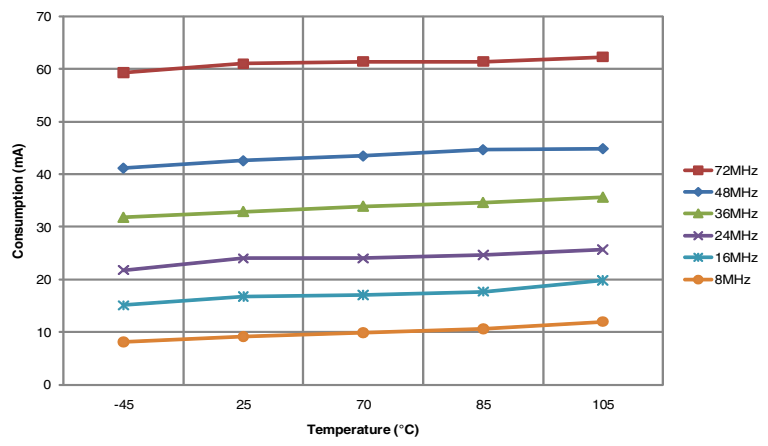

Figure 15. Typical current consumption in Run mode versus frequency (at 3.6 V)- code with data processing running from RAM, peripherals disabled

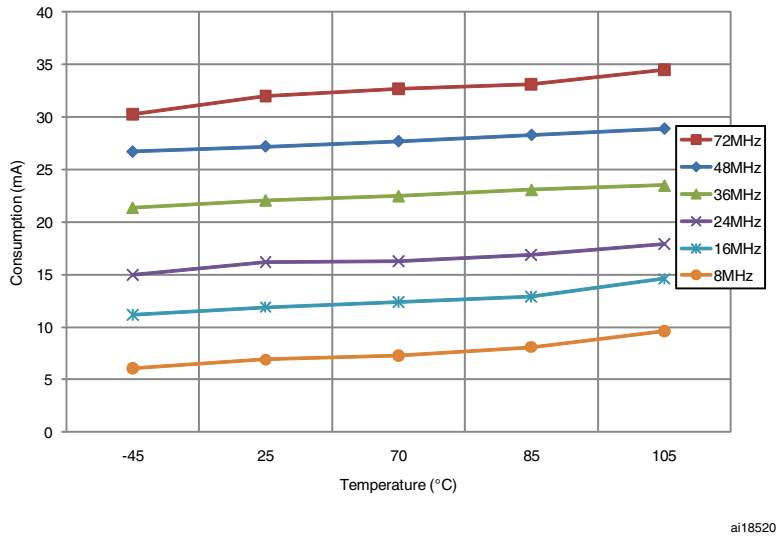

Table 16. Maximum current consumption in Sleep mode, code running from Flash or RAM

Symbol	Parameter	Conditions	f_{HCLK}	Max(1)		Unit
				T_A = 85 °C	T_A = 105 °C	
I_{DD}	Supply current in Sleep mode	External clock(2), all peripherals enabled	72 MHz	45	46	mA
			48 MHz	31	32	
			36 MHz	24	25	
			24 MHz	17	17.5	
			16 MHz	12.5	13	
			8 MHz	8	8	
		External clock(2), all peripherals disabled	72 MHz	8.5	9	
			48 MHz	7	7.5	
			36 MHz	6	6.5	
			24 MHz	5	5.5	
			16 MHz	4.5	5	
			8 MHz	4	4	

1. Guaranteed by characterization results at V_{DD} max, f_{HCLK} max with peripherals enabled.
2. External clock is 8 MHz and PLL is on when f_{HCLK} > 8 MHz.

Table 17. Typical and maximum current consumptions in Stop and Standby modes

Symbol	Parameter	Conditions	Typ(1)			Max		Unit
			V_{DD}/V_{BAT} = 2.0 V	V_{DD}/V_{BAT} = 2.4 V	V_{DD}/V_{BAT} = 3.3 V	T_A = 85 °C	T_A = 105 °C	
I_{DD}	Supply current in Stop mode	Regulator in run mode, low-speed and high-speed internal RC oscillators and high-speed oscillator OFF (no independent watchdog)	-	34.5	35	379	1130	µA
		Regulator in low-power mode, low-speed and high-speed internal RC oscillators and high-speed oscillator OFF (no independent watchdog)	-	24.5	25	365	1110	
	Supply current in Standby mode	Low-speed internal RC oscillator and independent watchdog ON	-	3	3.8	-	-	
		Low-speed internal RC oscillator ON, independent watchdog OFF	-	2.8	3.6	-	-	
		Low-speed internal RC oscillator and independent watchdog OFF, low-speed oscillator and RTC OFF	-	1.9	2.1	5(2)	6.5(2)	
I_{DD_VBAT}	Backup domain supply current	Low-speed oscillator and RTC ON	1.05	1.1	1.4	2(2)	2.3(2)	

1. Typical values are measured at T_A = 25 °C.
2. Guaranteed by characterization results.

Figure 16. Typical current consumption on V_{BAT} with RTC on vs. temperature at different V_{BAT} values

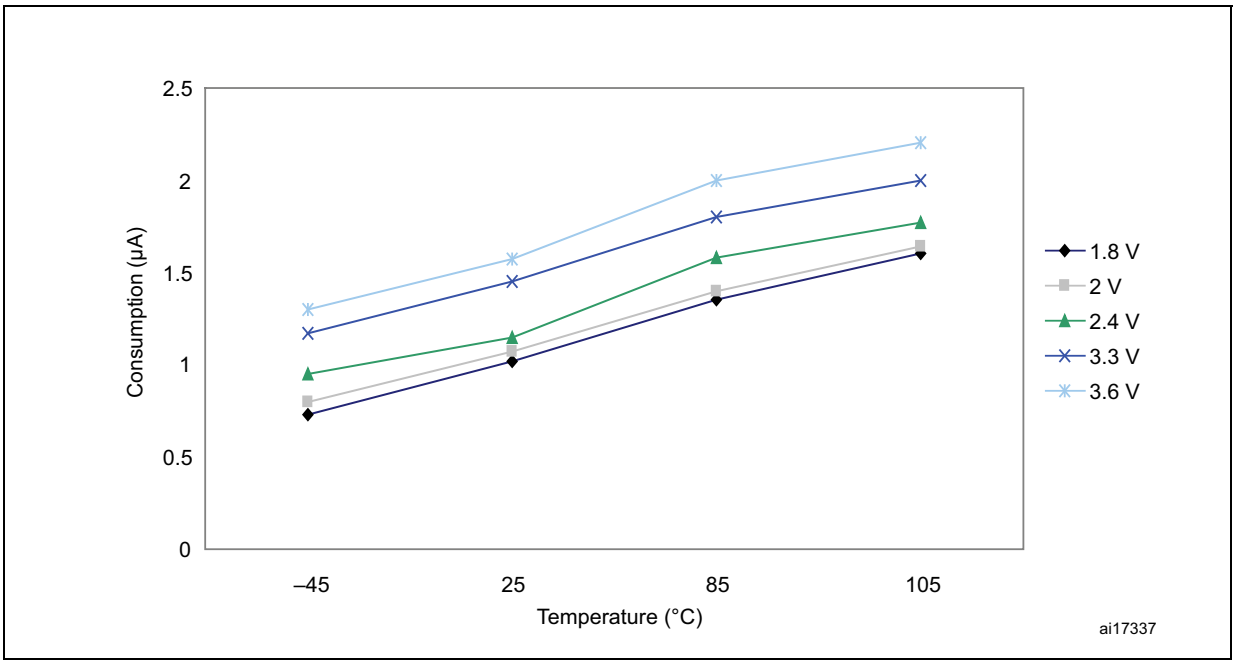

Figure 17. Typical current consumption in Stop mode with regulator in run mode versus temperature at different V_{DD} values

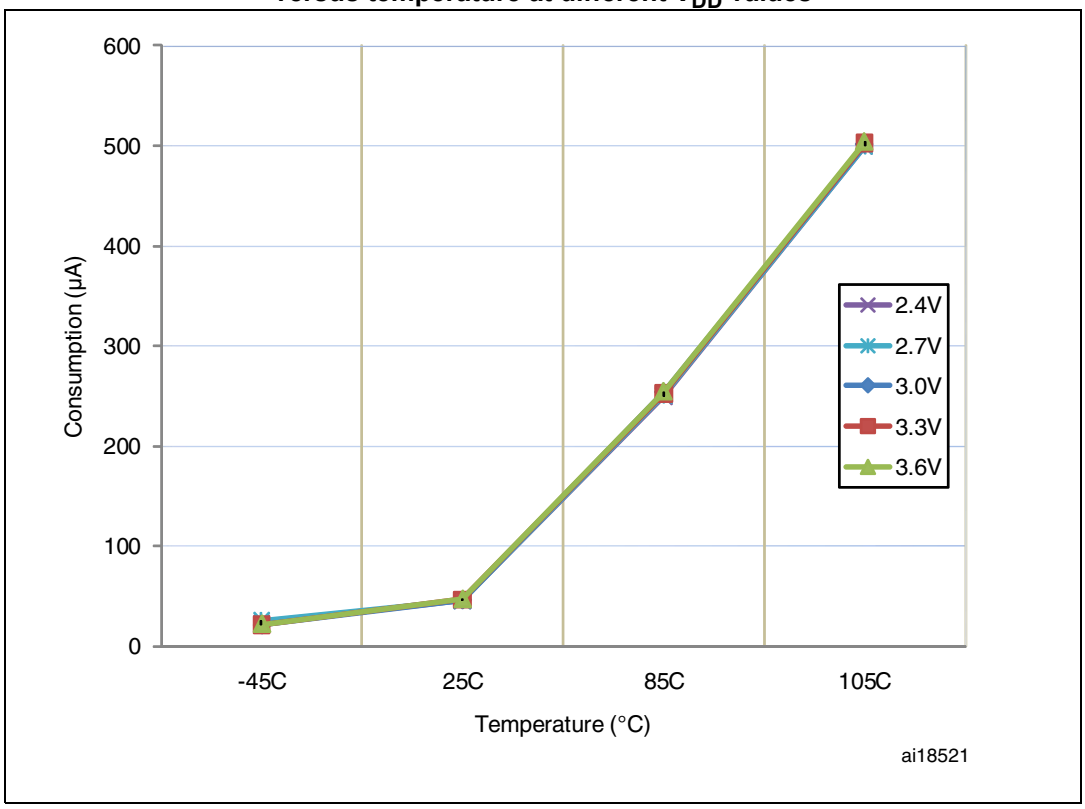

Figure 18. Typical current consumption in Stop mode with regulator in low-power mode versus temperature at different V_{DD} values

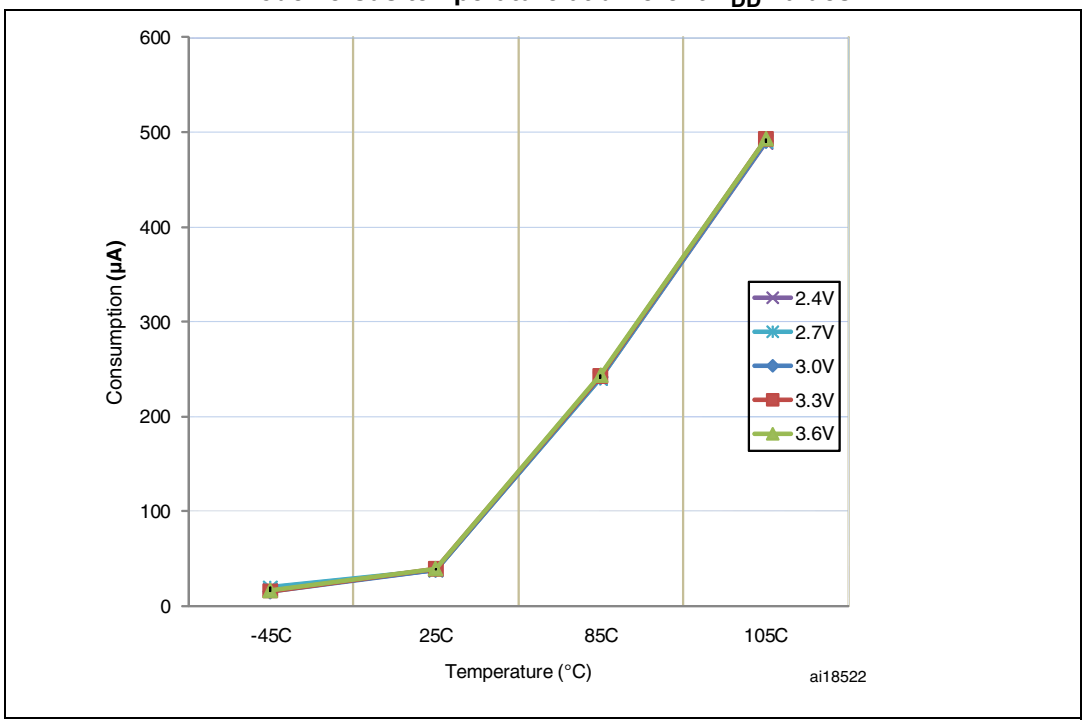

Figure 19. Typical current consumption in Standby mode versus temperature at different V_{DD} values

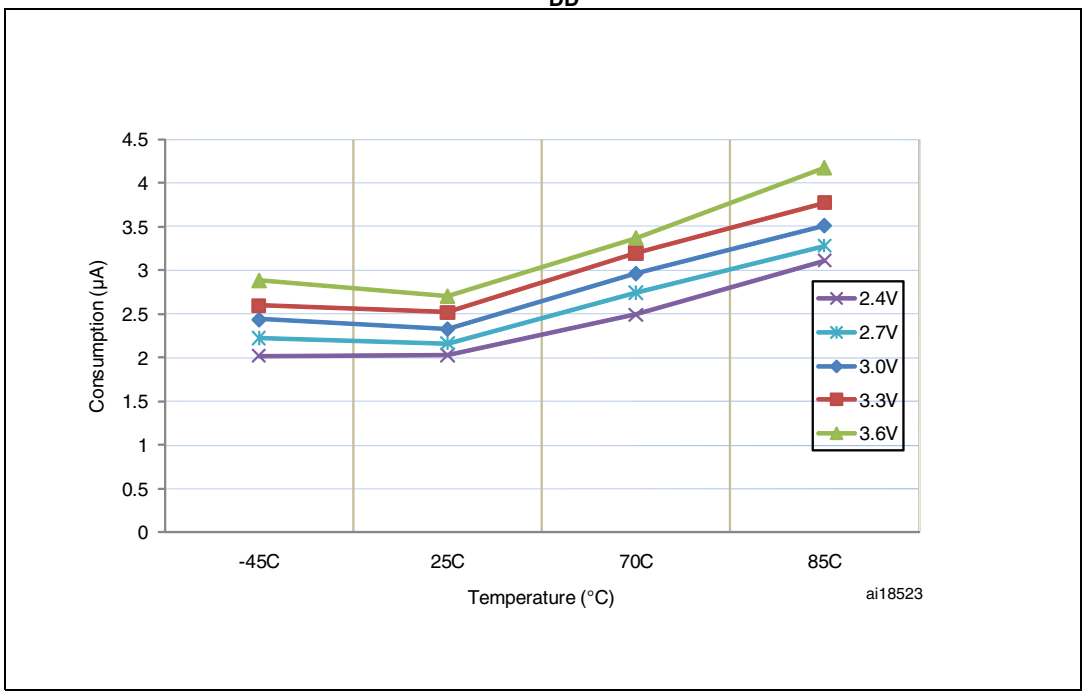

Typical current consumption

The MCU is placed under the following conditions:

- All I/O pins are in input mode with a static value at V_{DD} or V_{SS} (no load).
- All peripherals are disabled except if it is explicitly mentioned.
- The Flash access time is adjusted to f_{HCLK} frequency (0 wait state from 0 to 24 MHz, 1 wait state from 24 to 48 MHZ and 2 wait states above).
- Ambient temperature and V_{DD} supply voltage conditions summarized in *Table 10*.
- Prefetch is ON (Reminder: this bit must be set before clock setting and bus prescaling)

When the peripherals are enabled $f_{PCLK1} = f_{HCLK}/4$, $f_{PCLK}2 = f_{HCLK}/2$, $f_{ADCCLK} = f_{PCLK2}/4$

Table 18. Typical current consumption in Run mode, code with data processing running from Flash

Symbol	Parameter	Conditions	f_{HCLK}	Typ(1)		Unit
				All peripherals enabled(2)	All peripherals disabled	
I_{DD}	Supply current in Run mode	External clock(3)	72 MHz	51	30.5	mA
			48 MHz	34.6	20.7	
			36 MHz	26.6	16.2	
			24 MHz	18.5	11.4	
			16 MHz	12.8	8.2	
			8 MHz	7.2	5	
			4 MHz	4.2	3.1	
			2 MHz	2.7	2.1	
			1 MHz	2	1.7	
			500 kHz	1.6	1.4	
			125 kHz	1.3	1.2	
		Running on high speed internal RC (HSI), AHB prescaler used to reduce the frequency	64 MHz	45	27	mA
			48 MHz	34	20.1	
			36 MHz	26	15.6	
			24 MHz	17.9	10.8	
			16 MHz	12.2	7.6	
			8 MHz	6.6	4.4	
			4 MHz	3.6	2.5	
			2 MHz	2.1	1.5	
			1 MHz	1.4	1.1	
			500 kHz	1	0.8	
			125 kHz	0.7	0.6	

1. Typical values are measures at T_A = 25 °C, V_{DD} = 3.3 V.

2. Add an additional power consumption of 0.8 mA per ADC for the analog part. In applications, this consumption occurs only while the ADC is on (ADON bit is set in the ADC_CR2 register).
3. External clock is 8 MHz and PLL is on when f_{HCLK} > 8 MHz.

Table 19. Typical current consumption in Sleep mode, code running from Flash or RAM

Symbol	Parameter	Conditions	f_{HCLK}	Typ(1)		Unit
				All peripherals enabled(2)	All peripherals disabled	
I_{DD}	Supply current in Sleep mode	External clock(3)	72 MHz	29.5	6.4	mA
			48 MHz	20	4.6	
			36 MHz	15.1	3.6	
			24 MHz	10.4	2.6	
			16 MHz	7.2	2	
			8 MHz	3.9	1.3	
			4 MHz	2.6	1.2	
			2 MHz	1.85	1.15	
			1 MHz	1.5	1.1	
			500 kHz	1.3	1.05	
			125 kHz	1.2	1.05	
		Running on high speed internal RC (HSI), AHB prescaler used to reduce the frequency	64 MHz	25.6	5.1	
			48 MHz	19.4	4	
			36 MHz	14.5	3	
			24 MHz	9.8	2	
			16 MHz	6.6	1.4	
			8 MHz	3.3	0.7	
			4 MHz	2	0.6	
			2 MHz	1.25	0.55	
			1 MHz	0.9	0.5	
			500 kHz	0.7	0.45	
			125 kHz	0.6	0.45	

1. Typical values are measures at T_A = 25 °C, V_{DD} = 3.3 V.
2. Add an additional power consumption of 0.8 mA per ADC for the analog part. In applications, this consumption occurs only while the ADC is on (ADON bit is set in the ADC_CR2 register).
3. External clock is 8 MHz and PLL is on when f_{HCLK} > 8 MHz.

On-chip peripheral current consumption

The current consumption of the on-chip peripherals is given in *Table 20*. The MCU is placed under the following conditions:

- all I/O pins are in input mode with a static value at V_{DD} or V_{SS} (no load)
- all peripherals are disabled unless otherwise mentioned
- the given value is calculated by measuring the current consumption
  - with all peripherals clocked off
  - with only one peripheral clocked on
- ambient operating temperature and V_{DD} supply voltage conditions summarized in *Table 7*

Table 20. Peripheral current consumption

Peripheral		Current consumption	Unit
AHB (up to 72 MHz)	DMA1	20,42	µA/MHz
	DMA2	19,03	
	FSMC	52,36	
	CRC	2,36	
	SDIO	33,33	
	BusMatrix(1)	9,72	

Table 20. Peripheral current consumption (continued)

Peripheral		Current consumption	Unit
APB1 (up to 36 MHz)	APB1-Bridge	7,78	µA/MHz
	TIM2	33,06	
	TIM3	31,94	
	TIM4	31,67	
	TIM5	31,94	
	TIM6	8,06	
	TIM7	8,06	
	SPI2/I2S2(2)	8,33	
	SPI3/I2S3(2)	8,33	
	USART2	12,22	
	USART3	12,22	
	UART4	12,22	
	UART5	12,22	
	I2C1	10,28	
	I2C2	10,00	
	USB	18,06	
	CAN1	18,33	
	DAC(3)	8,06	
	WWDG	3,89	
	PWR	1,11	
	BKP	1,11	
	IWDG	5,28	

Table 20. Peripheral current consumption (continued)

Peripheral		Current consumption	Unit
APB2 (up to 72 MHz)	APB2-Bridge	4,17	µA/MHz
	GPIOA	8,47	
	GPIOB	8,47	
	GPIOC	6,53	
	GPIOD	8,47	
	GPIOE	6,53	
	GPIOF	6,53	
	GPIOG	6,11	
	SPI1	4,72	
	USART1	12,50	
	TIM1	22,92	
	TIM8	22,92	
	ADC1(4)	17,32	
	ADC2(4)	15,18	
	ADC3(4)	14,82	

1. The BusMatrix is automatically active when at least one master is ON. (CPU, DMA1 or DMA2).
2. When the I2S is enabled, a current consumption equal to 0.02 mA must be added.
3. When DAC_OU1 or DAC_OUT2 is enabled, a current consumption equal to 0.36 mA must be added.
4. Specific conditions for measuring ADC current consumption: f_{HCLK} = 56 MHz, $f_{APB1} = f_{HCLK}/2$, $f_{APB2} = f_{HCLK}$, $f_{ADCCLK} = f_{APB2}/4$. When ADON bit in the ADCx_CR2 register is set to 1, a current consumption of analog part equal to 0.54 mA must be added for each ADC.

5.3.6 External clock source characteristics

High-speed external user clock generated from an external source

The characteristics given in *Table 21* result from tests performed using an high-speed external clock source, and under ambient temperature and supply voltage conditions summarized in *Table 10*.

Table 21. High-speed external user clock characteristics

Symbol	Parameter	Conditions	Min	Typ	Max	Unit
f_{HSE_ext}	User external clock source frequency(1)	-	1	8	25	MHz
V_{HSEH}	OSC_IN input pin high level voltage		$0.7V_{DD}$	-	V_{DD}	V
V_{HSEL}	OSC_IN input pin low level voltage		V_{SS}	-	$0.3V_{DD}$	
$t_{w(HSE)}$ $t_{w(HSE)}$	OSC_IN high or low time(1)		5	-	-	ns
$t_{r(HSE)}$ $t_{f(HSE)}$	OSC_IN rise or fall time(1)		-	-	20	
$C_{in(HSE)}$	OSC_IN input capacitance(1)	-	-	5	-	pF
$DuCy_{(HSE)}$	Duty cycle	-	45	-	55	%
I_L	OSC_IN Input leakage current	$V_{SS} \leq V_{IN} \leq V_{DD}$	-	-	±1	µA

1. Guaranteed by design.

Low-speed external user clock generated from an external source

The characteristics given in *Table 22* result from tests performed using an low-speed external clock source, and under ambient temperature and supply voltage conditions summarized in *Table 10*.

Table 22. Low-speed external user clock characteristics

Symbol	Parameter	Conditions	Min	Typ	Max	Unit
f_{LSE_ext}	User External clock source frequency(1)	-	-	32.768	1000	kHz
V_{LSEH}	OSC32_IN input pin high level voltage		$0.7V_{DD}$	-	V_{DD}	V
V_{LSEL}	OSC32_IN input pin low level voltage		V_{SS}	-	$0.3V_{DD}$	
$t_{w(LSE)}$ $t_{w(LSE)}$	OSC32_IN high or low time(1)		450	-	-	ns
$t_{r(LSE)}$ $t_{f(LSE)}$	OSC32_IN rise or fall time(1)		-	-	50	
$C_{in(LSE)}$	OSC32_IN input capacitance(1)	-	-	5	-	pF
$DuCy_{(LSE)}$	Duty cycle	-	30	-	70	%
I_L	OSC32_IN Input leakage current	$V_{SS} \leq V_{IN} \leq V_{DD}$	-	-	±1	µA

1. Guaranteed by design.

Figure 20. High-speed external clock source AC timing diagram

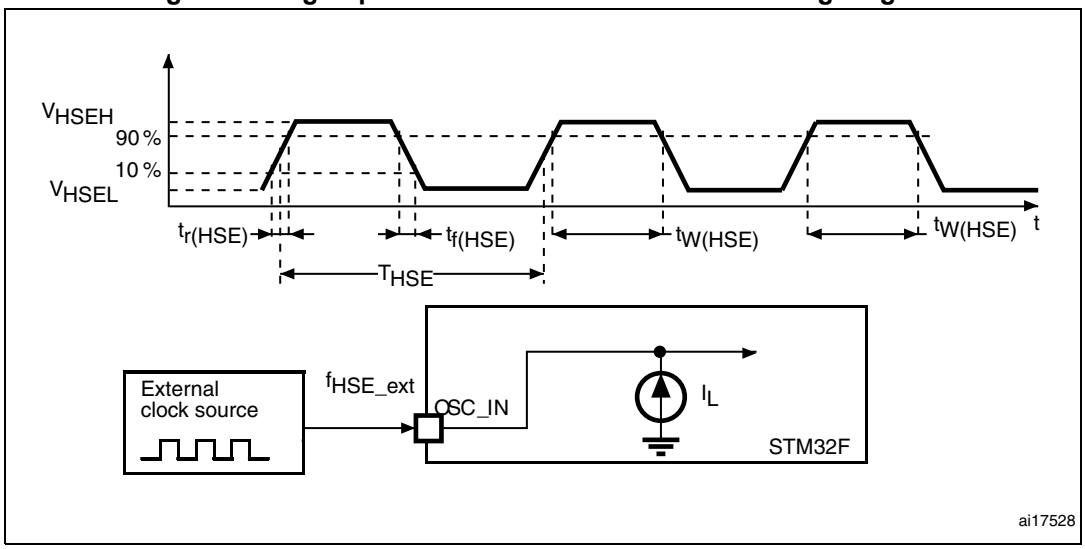

Figure 21. Low-speed external clock source AC timing diagram

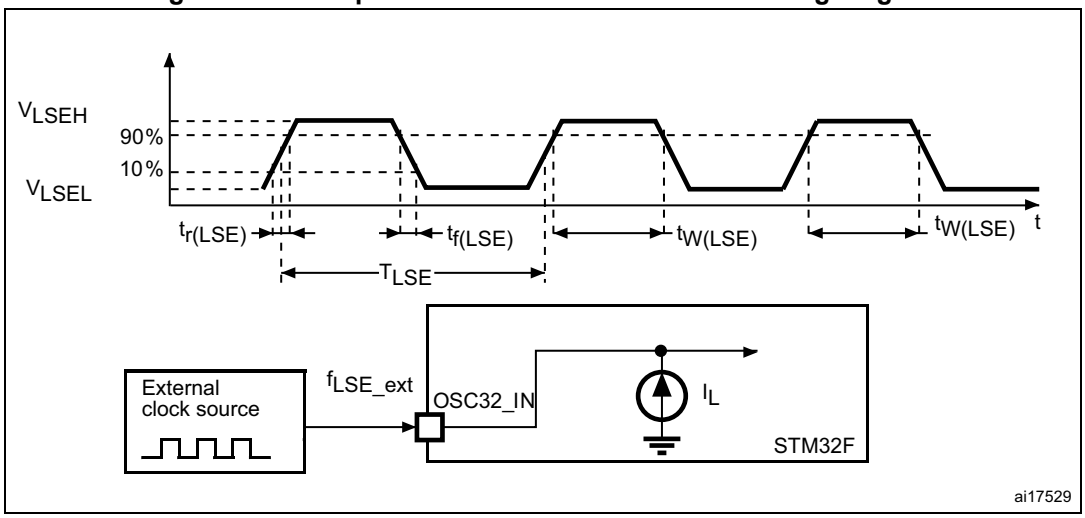

High-speed external clock generated from a crystal/ceramic resonator

The high-speed external (HSE) clock can be supplied with a 4 to 16 MHz crystal/ceramic resonator oscillator. All the information given in this paragraph are based on characterization results obtained with typical external components specified in *Table 23*. In the application, the resonator and the load capacitors have to be placed as close as possible to the oscillator pins in order to minimize output distortion and startup stabilization time. Refer to the crystal resonator manufacturer for more details on the resonator characteristics (frequency, package, accuracy).

Table 23. HSE 4-16 MHz oscillator characteristics(1)(2)

Symbol	Parameter	Conditions	Min	Typ	Max	Unit
f_{OSC_IN}	Oscillator frequency	-	4	8	16	MHz
R_F	Feedback resistor	-	-	200	-	kΩ
C	Recommended load capacitance versus equivalent serial resistance of the crystal (R_S)(3)	R_S = 30 Ω	-	30	-	pF
i_2	HSE driving current	V_{DD}= 3.3 V, V_{IN} = V_{SS} with 30 pF load	-	-	1	mA
g_m	Oscillator transconductance	Startup	25	-	-	mA/V
$t_{SU(HSE)}$(4)	Startup time	V_{DD} is stabilized	-	2	-	ms

1. Resonator characteristics given by the crystal/ceramic resonator manufacturer.
2. Guaranteed by characterization results.
3. The relatively low value of the RF resistor offers a good protection against issues resulting from use in a humid environment, due to the induced leakage and the bias condition change. However, it is recommended to take this point into account if the MCU is used in tough humidity conditions.
4. $t_{SU(HSE)}$ is the startup time measured from the moment it is enabled (by software) to a stabilized 8 MHz oscillation is reached. This value is measured for a standard crystal resonator and it can vary significantly with the crystal manufacturer

For C_{L1} and C_{L2}, it is recommended to use high-quality external ceramic capacitors in the 5 pF to 25 pF range (typ.), designed for high-frequency applications, and selected to match the requirements of the crystal or resonator (see *Figure 22*). C_{L1} and C_{L2} are usually the same size. The crystal manufacturer typically specifies a load capacitance which is the series combination of C_{L1} and C_{L2}. PCB and MCU pin capacitance must be included (10 pF can be used as a rough estimate of the combined pin and board capacitance) when sizing C_{L1} and C_{L2}. Refer to the application note AN2867 “Oscillator design guide for ST microcontrollers” available from the ST website *www.st.com*.

Figure 22. Typical application with an 8 MHz crystal

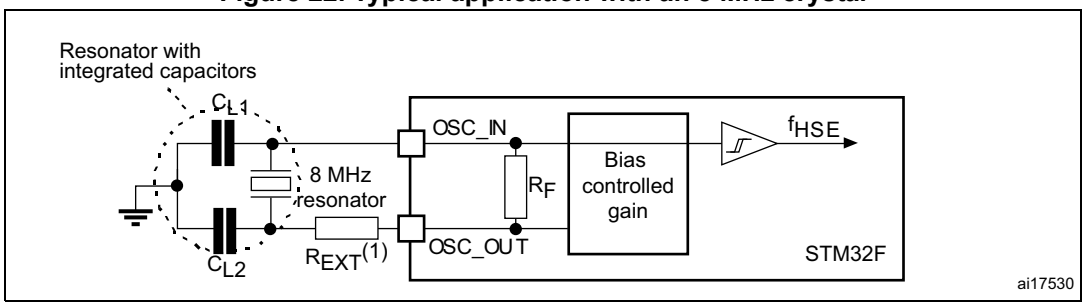

1. R_{EXT} value depends on the crystal characteristics.

Low-speed external clock generated from a crystal/ceramic resonator

The low-speed external (LSE) clock can be supplied with a 32.768 kHz crystal/ceramic resonator oscillator. All the information given in this paragraph are based on characterization results obtained with typical external components specified in *Table 24*. In the application, the resonator and the load capacitors have to be placed as close as possible to the oscillator pins in order to minimize output distortion and startup stabilization time. Refer to the crystal resonator manufacturer for more details on the resonator characteristics (frequency, package, accuracy).

Table 24. LSE oscillator characteristics (f_{LSE} = 32.768 kHz)(1)(2)

Symbol	Parameter	Conditions		Min	Typ	Max	Unit
R_F	Feedback resistor	-		-	5	-	MΩ
C(2)	Recommended load capacitance versus equivalent serial resistance of the crystal (R_S)	R_S = 30 kΩ		-	-	15	pF
I_2	LSE driving current	V_{DD} = 3.3 V, V_{IN} = V_{SS}		-	-	1.4	µA
g_m	Oscillator transconductance	-		5	-	-	µA/V
$t_{SU(LSE)}$(3)	Startup time	V_{DD} is stabilized	T_A = 50 °C	-	1.5	-	s
			T_A = 25 °C	-	2.5	-	
			T_A = 10 °C	-	4	-	
			T_A = 0 °C	-	6	-	
			T_A = -10 °C	-	10	-	
			T_A = -20 °C	-	17	-	
			T_A = -30 °C	-	32	-	
			T_A = -40 °C	-	60	-	

1. Guaranteed by characterization results.
2. Refer to the note and caution paragraphs below the table, and to the application note AN2867 “Oscillator design guide for ST microcontrollers”.
3. $t_{SU(LSE)}$ is the startup time measured from the moment it is enabled (by software) until a stabilized 32.768 kHz oscillation is reached. This value is measured for a standard crystal and it can vary significantly with the crystal manufacturer, PCB layout and humidity.

Note: *For C_{L1} and C_{L2}, it is recommended to use high-quality ceramic capacitors in the 5 pF to 15 pF range selected to match the requirements of the crystal or resonator (see Figure 23). C_{L1} and C_{L2}, are usually the same size. The crystal manufacturer typically specifies a load capacitance which is the series combination of C_{L1} and C_{L2}.*
Load capacitance C_L has the following formula: $C_L = C_{L1} \times C_{L2} / (C_{L1} + C_{L2}) + C_{stray}$ where C_{stray} is the pin capacitance and board or trace PCB-related capacitance. Typically, it is between 2 pF and 7 pF.

Caution: To avoid exceeding the maximum value of C_{L1} and C_{L2} (15 pF) it is strongly recommended to use a resonator with a load capacitance $C_L \leq 7$ pF. Never use a resonator with a load capacitance of 12.5 pF.
Example: if you choose a resonator with a load capacitance of C_L = 6 pF, and C_{stray} = 2 pF, then C_{L1} = C_{L2} = 8 pF.

Figure 23. Typical application with a 32.768 kHz crystal

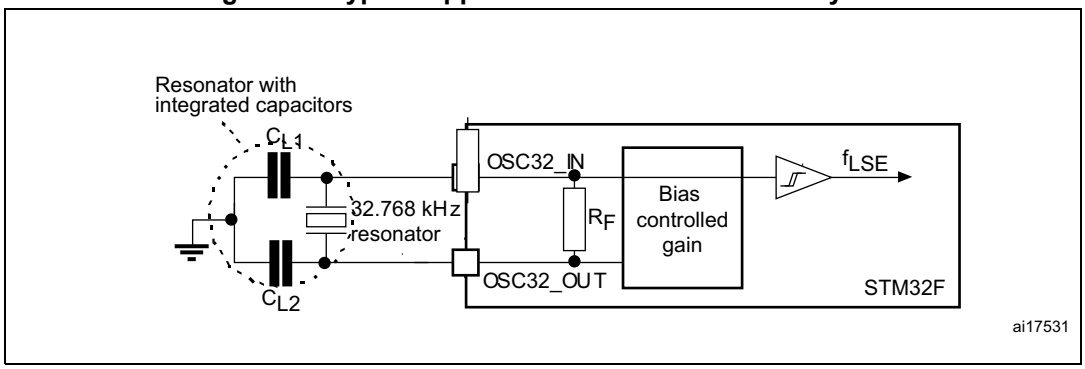

5.3.7 Internal clock source characteristics

The parameters given in *Table 25* are derived from tests performed under ambient temperature and V_{DD} supply voltage conditions summarized in *Table 10*.

High-speed internal (HSI) RC oscillator

Table 25. HSI oscillator characteristics(1)

Symbol	Parameter	Conditions		Min	Typ	Max	Unit
f_{HSI}	Frequency	-		-	8	-	MHz
$DuCy_{(HSI)}$	Duty cycle	-		45	-	55	%
ACC_{HSI}	Accuracy of the HSI oscillator	User-trimmed with the RCC_CR register(2)		-	-	1(3)	%
		Factory-calibrated(4)	T_A = –40 to 105 °C	–2	-	2.5	%
			T_A = –10 to 85 °C	–1.5	-	2.2	%
			T_A = 0 to 70 °C	–1.3	-	2	%
			T_A = 25 °C	–1.1	-	1.8	%
$t_{su(HSI)}$(4)	HSI oscillator startup time	-		1	-	2	µs
$I_{DD(HSI)}$(4)	HSI oscillator power consumption	-		-	80	100	µA

1. V_{DD} = 3.3 V, T_A = –40 to 105 °C unless otherwise specified.
2. Refer to application note AN2868 “STM32F10xxx internal RC oscillator (HSI) calibration” available from the ST website *www.st.com*.
3. Guaranteed by design.
4. Guaranteed by characterization results.

Low-speed internal (LSI) RC oscillator

Table 26. LSI oscillator characteristics (1)

Symbol	Parameter	Min	Typ	Max	Unit
f_{LSI}(2)	Frequency	30	40	60	kHz
$t_{su(LSI)}$(3)	LSI oscillator startup time	-	-	85	µs
$I_{DD(LSI)}$(3)	LSI oscillator power consumption	-	0.65	1.2	µA

1. V_{DD} = 3 V, T_A = –40 to 105 °C unless otherwise specified.
2. Guaranteed by characterization results.
3. Guaranteed by design.

Wakeup time from low-power mode

The wakeup times given in *Table 27* is measured on a wakeup phase with a 8-MHz HSI RC oscillator. The clock source used to wake up the device depends from the current operating mode:

- Stop or Standby mode: the clock source is the RC oscillator
- Sleep mode: the clock source is the clock that was set before entering Sleep mode.

All timings are derived from tests performed under ambient temperature and V_{DD} supply voltage conditions summarized in *Table 10*.

Table 27. Low-power mode wakeup timings

Symbol	Parameter	Typ	Unit
$t_{WUSLEEP}$(1)	Wakeup from Sleep mode	1.8	µs
t_{WUSTOP}(1)	Wakeup from Stop mode (regulator in run mode)	3.6	µs
	Wakeup from Stop mode (regulator in low-power mode)	5.4	
$t_{WUSTDBY}$(1)	Wakeup from Standby mode	50	µs

1. The wakeup times are measured from the wakeup event to the point in which the user application code reads the first instruction.

5.3.8 PLL characteristics

The parameters given in *Table 28* are derived from tests performed under ambient temperature and V_{DD} supply voltage conditions summarized in *Table 10*.

Table 28. PLL characteristics

Symbol	Parameter	Value			Unit
		Min	Typ	Max(1)	
f_{PLL_IN}	PLL input clock(2)	1	8.0	25	MHz
	PLL input clock duty cycle	40	-	60	%
f_{PLL_OUT}	PLL multiplier output clock	16	-	72	MHz
t_{LOCK}	PLL lock time	-	-	200	µs
Jitter	Cycle-to-cycle jitter	-	-	300	ps

1. Guaranteed by characterization results.
2. Take care of using the appropriate multiplier factors so as to have PLL input clock values compatible with the range defined by f_{PLL_OUT}.

5.3.9 Memory characteristics

Flash memory

The characteristics are given at T_A = –40 to 105 °C unless otherwise specified.

Table 29. Flash memory characteristics

Symbol	Parameter	Conditions	Min	Typ	Max(1)	Unit
t_{prog}	16-bit programming time	T_A = –40 to +105 °C	40	52.5	70	µs
t_{ERASE}	Page (2 KB) erase time	T_A = –40 to +105 °C	20	-	40	ms
t_{ME}	Mass erase time	T_A = –40 to +105 °C	20	-	40	ms
I_{DD}	Supply current	Read mode f_{HCLK} = 72 MHz with 2 wait states, V_{DD} = 3.3 V	-	-	28	mA
		Write mode f_{HCLK} = 72 MHz, V_{DD} = 3.3 V	-	-	7	mA
		Erase mode f_{HCLK} = 72 MHz, V_{DD} = 3.3 V	-	-	5	mA
		Power-down mode / Halt, V_{DD} = 3.0 to 3.6 V	-	-	50	µA
V_{prog}	Programming voltage	-	2	-	3.6	V

1. Guaranteed by design.

Table 30. Flash memory endurance and data retention

Symbol	Parameter	Conditions	Value	Unit
			Min(1)	
N_{END}	Endurance	T_A = -40 to +85 °C (6 suffix versions) T_A = -40 to +105 °C (7 suffix versions)	10	kcycles
t_{RET}	Data retention	1 kcycle(2) at T_A = 85 °C	30	Years
		1 kcycle(2) at T_A = 105 °C	10	
		10 kcycles(2) at T_A = 55 °C	20	

1. Guaranteed by characterization results.
2. Cycling performed over the whole temperature range.

5.3.10 FSMC characteristics

Asynchronous waveforms and timings

Figure 24 through *Figure 27* represent asynchronous waveforms and *Table 31* through *Table 34* provide the corresponding timings. The results shown in these tables are obtained with the following FSMC configuration:

- AddressSetupTime = 0
- AddressHoldTime = 1
- DataSetupTime = 1

Figure 24. Asynchronous non-multiplexed SRAM/PSRAM/NOR read waveforms

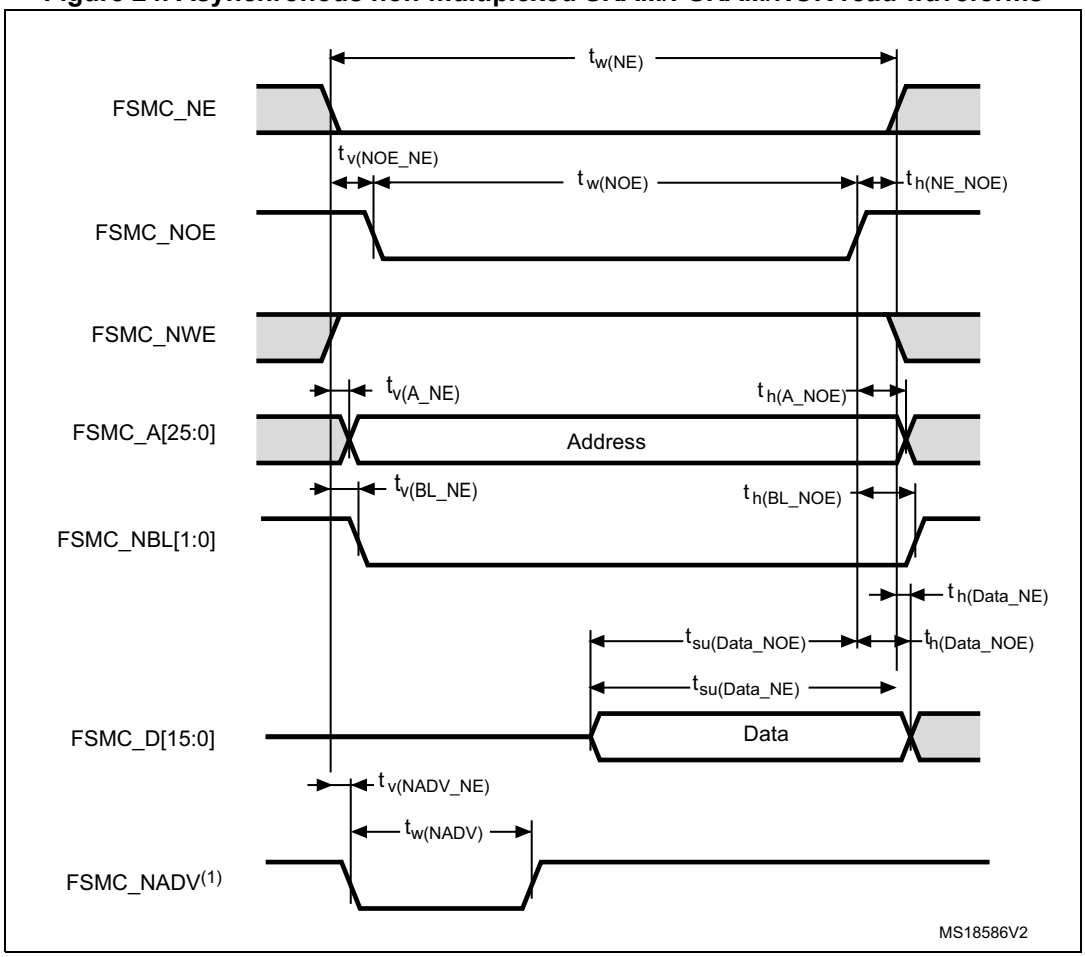

1. Mode 2/B, C and D only. In Mode 1, FSMC_NADV is not used.

Table 31. Asynchronous non-multiplexed SRAM/PSRAM/NOR read timings(1)

Symbol	Parameter	Min	Max	Unit
$t_{w(NE)}$	FSMC_NE low time	$5t_{HCLK} – 1.5$	$5t_{HCLK} + 2$	ns
$t_{v(NOE_NE)}$	FSMC_NEx low to FSMC_NOE low	0.5	1.5	ns
$t_{w(NOE)}$	FSMC_NOE low time	$5t_{HCLK} – 1.5$	$5t_{HCLK} + 1.5$	ns
$t_{h(NE_NOE)}$	FSMC_NOE high to FSMC_NE high hold time	–1.5	-	ns
$t_{v(A_NE)}$	FSMC_NEx low to FSMC_A valid	-	0	ns
$t_{h(A_NOE)}$	Address hold time after FSMC_NOE high	0.1	-	ns
$t_{v(BL_NE)}$	FSMC_NEx low to FSMC_BL valid	-	0	ns
$t_{h(BL_NOE)}$	FSMC_BL hold time after FSMC_NOE high	0	-	ns
$t_{su(Data_NE)}$	Data to FSMC_NEx high setup time	$2t_{HCLK} + 25$	-	ns
$t_{su(Data_NOE)}$	Data to FSMC_NOEx high setup time	$2t_{HCLK} + 25$	-	ns
$t_{h(Data_NOE)}$	Data hold time after FSMC_NOE high	0	-	ns
$t_{h(Data_NE)}$	Data hold time after FSMC_NEx high	0	-	ns
$t_{v(NADV_NE)}$	FSMC_NEx low to FSMC_NADV low	-	5	ns
$t_{w(NADV)}$	FSMC_NADV low time	-	$t_{HCLK} + 1.5$	ns

1. C_L = 15 pF.

Figure 25. Asynchronous non-multiplexed SRAM/PSRAM/NOR write waveforms

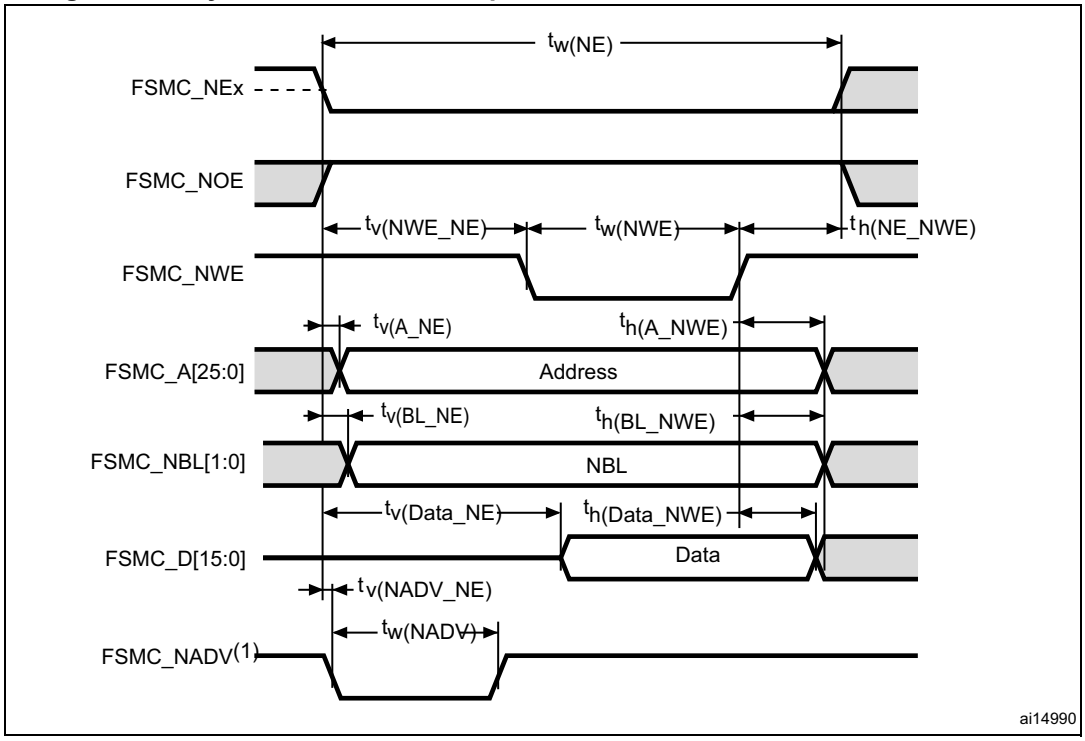

1. Mode 2/B, C and D only. In Mode 1, FSMC_NADV is not used.

Table 32. Asynchronous non-multiplexed SRAM/PSRAM/NOR write timings(1)(2)

Symbol	Parameter	Min	Max	Unit
$t_{w(NE)}$	FSMC_NE low time	$3t_{HCLK} - 1$	$3t_{HCLK} + 2$	ns
$t_{v(NWE_NE)}$	FSMC_NEx low to FSMC_NWE low	$t_{HCLK} - 0.5$	$t_{HCLK} + 1.5$	ns
$t_{w(NWE)}$	FSMC_NWE low time	$t_{HCLK} - 0.5$	$t_{HCLK} + 1.5$	ns
$t_{h(NE_NWE)}$	FSMC_NWE high to FSMC_NE high hold time	t_{HCLK}	-	ns
$t_{v(A_NE)}$	FSMC_NEx low to FSMC_A valid	-	7.5	ns
$t_{h(A_NWE)}$	Address hold time after FSMC_NWE high	t_{HCLK}	-	ns
$t_{v(BL_NE)}$	FSMC_NEx low to FSMC_BL valid	-	0	ns
$t_{h(BL_NWE)}$	FSMC_BL hold time after FSMC_NWE high	$t_{HCLK} - 0.5$	-	ns
$t_{v(Data_NE)}$	FSMC_NEx low to Data valid	-	$t_{HCLK} + 7$	ns
$t_{h(Data_NWE)}$	Data hold time after FSMC_NWE high	t_{HCLK}	-	ns
$t_{v(NADV_NE)}$	FSMC_NEx low to FSMC_NADV low	-	5.5	ns
$t_{w(NADV)}$	FSMC_NADV low time	-	$t_{HCLK} + 1.5$	ns

1. C_L = 15 pF.
2. Guaranteed by characterization results.

Figure 26. Asynchronous multiplexed PSRAM/NOR read waveforms

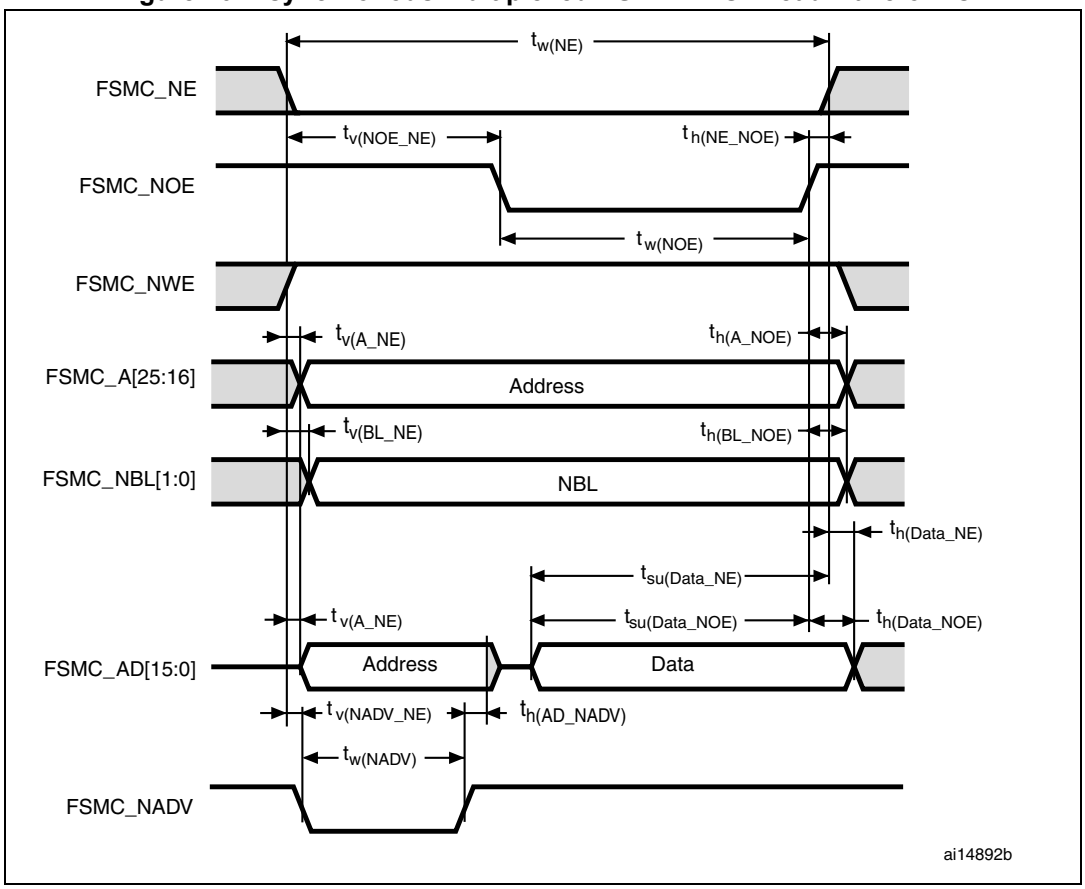

Table 33. Asynchronous multiplexed PSRAM/NOR read timings(1)(2)

Symbol	Parameter	Min	Max	Unit
$t_{w(NE)}$	FSMC_NE low time	$7t_{HCLK} – 2$	$7t_{HCLK} + 2$	ns
$t_{v(NOE_NE)}$	FSMC_NEx low to FSMC_NOE low	$3t_{HCLK} – 0.5$	$3t_{HCLK} + 1.5$	ns
$t_{w(NOE)}$	FSMC_NOE low time	$4t_{HCLK} – 1$	$4t_{HCLK} + 2$	ns
$t_{h(NE_NOE)}$	FSMC_NOE high to FSMC_NE high hold time	–1	-	ns
$t_{v(A_NE)}$	FSMC_NEx low to FSMC_A valid	-	0	ns
$t_{v(NADV_NE)}$	FSMC_NEx low to FSMC_NADV low	3	5	ns
$t_{w(NADV)}$	FSMC_NADV low time	t_{HCLK} –1.5	t_{HCLK} + 1.5	ns
$t_{h(AD_NADV)}$	FSMC_AD (address) valid hold time after FSMC_NADV high	t_{HCLK}	-	ns
$t_{h(A_NOE)}$	Address hold time after FSMC_NOE high	t_{HCLK} -2	-	ns
$t_{h(BL_NOE)}$	FSMC_BL hold time after FSMC_NOE high	0	-	ns
$t_{v(BL_NE)}$	FSMC_NEx low to FSMC_BL valid	-	0	ns
$t_{su(Data_NE)}$	Data to FSMC_NEx high setup time	$2t_{HCLK} + 24$	-	ns
$t_{su(Data_NOE)}$	Data to FSMC_NOE high setup time	$2t_{HCLK} + 25$	-	ns
$t_{h(Data_NE)}$	Data hold time after FSMC_NEx high	0	-	ns
$t_{h(Data_NOE)}$	Data hold time after FSMC_NOE high	0	-	ns

1. C_L = 15 pF.
2. Guaranteed by characterization results.

Figure 27. Asynchronous multiplexed PSRAM/NOR write waveforms

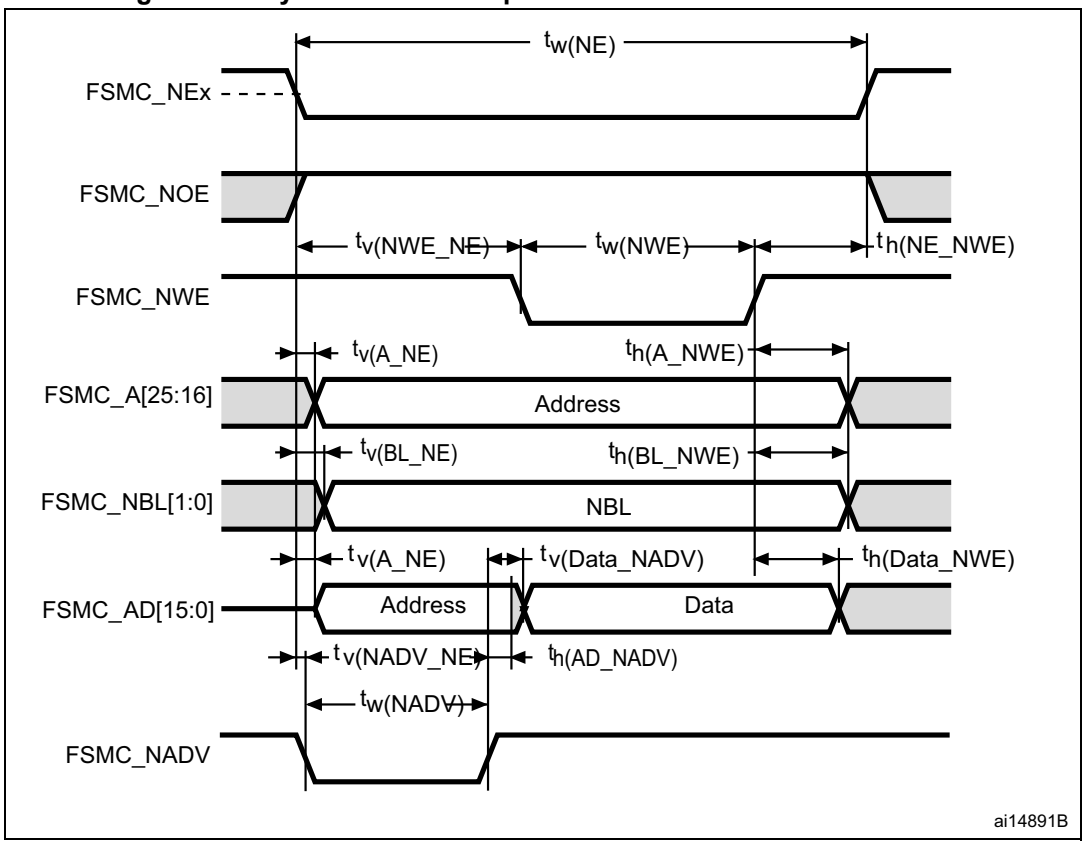

Table 34. Asynchronous multiplexed PSRAM/NOR write timings(1)(2)

Symbol	Parameter	Min	Max	Unit
$t_{w(NE)}$	FSMC_NE low time	$5t_{HCLK} - 1$	$5t_{HCLK} + 2$	ns
$t_{v(NWE_NE)}$	FSMC_NEx low to FSMC_NWE low	$2t_{HCLK}$	$2t_{HCLK} + 1$	ns
$t_{w(NWE)}$	FSMC_NWE low time	$2t_{HCLK} - 1$	$2t_{HCLK} + 2$	ns
$t_{h(NE_NWE)}$	FSMC_NWE high to FSMC_NE high hold time	$t_{HCLK} - 1$	-	ns
$t_{v(A_NE)}$	FSMC_NEx low to FSMC_A valid	-	7	ns
$t_{v(NADV_NE)}$	FSMC_NEx low to FSMC_NADV low	3	5	ns
$t_{w(NADV)}$	FSMC_NADV low time	$t_{HCLK} - 1$	$t_{HCLK} + 1$	ns
$t_{h(AD_NADV)}$	FSMC_AD (address) valid hold time after FSMC_NADV high	$t_{HCLK} - 3$	-	ns
$t_{h(A_NWE)}$	Address hold time after FSMC_NWE high	$4t_{HCLK}$	-	ns
$t_{v(BL_NE)}$	FSMC_NEx low to FSMC_BL valid	-	1.6	ns
$t_{h(BL_NWE)}$	FSMC_BL hold time after FSMC_NWE high	$t_{HCLK} - 1.5$	-	ns
$t_{v(Data_NADV)}$	FSMC_NADV high to Data valid	-	$t_{HCLK} + 1.5$	ns
$t_{h(Data_NWE)}$	Data hold time after FSMC_NWE high	$t_{HCLK} - 5$	-	ns

1. C_L = 15 pF.
2. BGuaranteed by characterization results.

Synchronous waveforms and timings

Figure 28 through *Figure 31* represent synchronous waveforms and *Table 36* through *Table 38* provide the corresponding timings. The results shown in these tables are obtained with the following FSMC configuration:

- BurstAccessMode = FSMC_BurstAccessMode_Enable;
- MemoryType = FSMC_MemoryType_CRAM;
- WriteBurst = FSMC_WriteBurst_Enable;
- CLKDivision = 1; (0 is not supported, see the STM32F10xxx reference manual)
- DataLatency = 1 for NOR Flash; DataLatency = 0 for PSRAM

Figure 28. Synchronous multiplexed NOR/PSRAM read timings

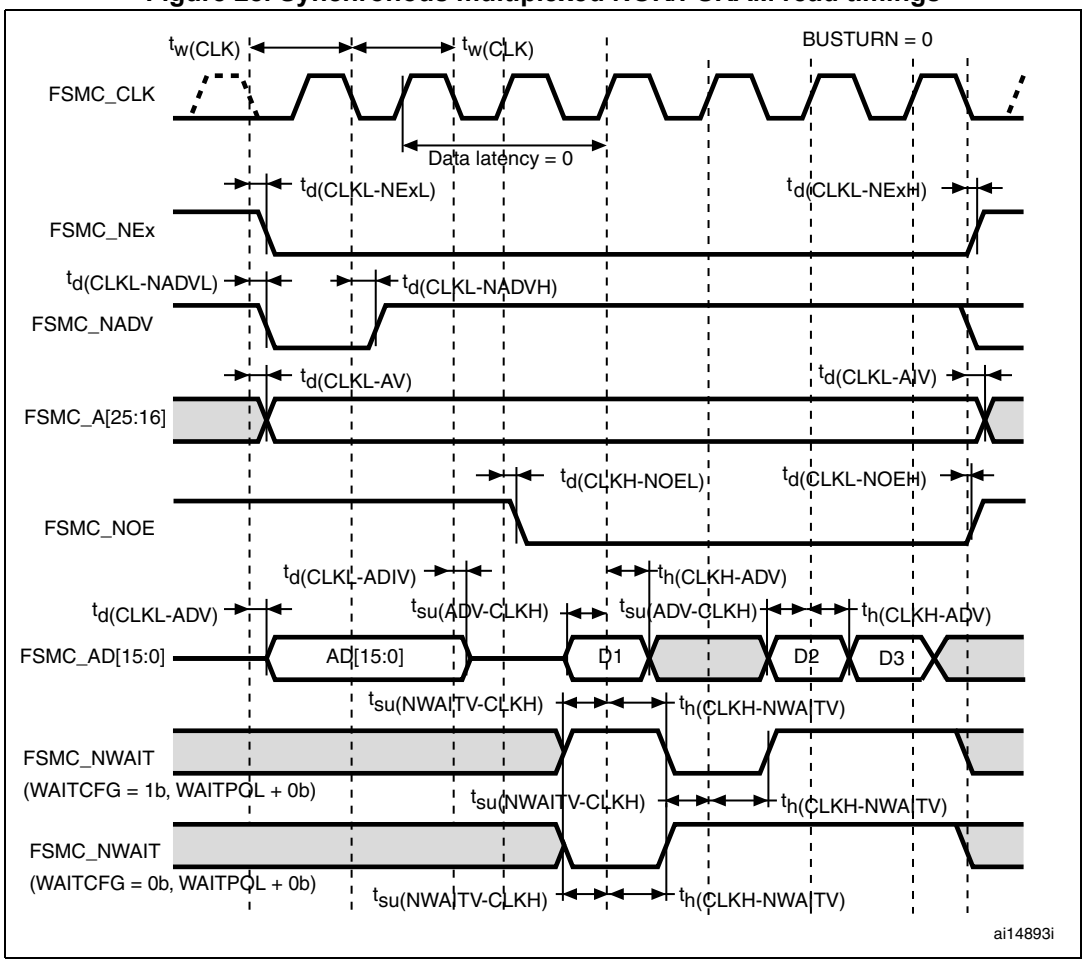

Table 35. Synchronous multiplexed NOR/PSRAM read timings(1)(2)

Symbol	Parameter	Min	Max	Unit
$t_{w(CLK)}$	FSMC_CLK period	27.7	-	ns
$t_{d(CLKL-NExL)}$	FSMC_CLK low to FSMC_NEx low (x = 0...2)	-	1.5	ns
$t_{d(CLKL-NExH)}$	FSMC_CLK low to FSMC_NEx high (x = 0...2)	2	-	ns
$t_{d(CLKL-NADVL)}$	FSMC_CLK low to FSMC_NADV low	-	4	ns
$t_{d(CLKL-NADVH)}$	FSMC_CLK low to FSMC_NADV high	5	-	ns
$t_{d(CLKL-AV)}$	FSMC_CLK low to FSMC_Ax valid (x = 16...25)	-	0	ns
$t_{d(CLKL-AIV)}$	FSMC_CLK low to FSMC_Ax invalid (x = 16...25)	2	-	ns
$t_{d(CLKL-NOEL)}$	FSMC_CLK low to FSMC_NOE low	-	1	ns
$t_{d(CLKL-NOEH)}$	FSMC_CLK low to FSMC_NOE high	1.5	-	ns
$t_{d(CLKL-ADV)}$	FSMC_CLK low to FSMC_AD[15:0] valid	-	12	ns
$t_{d(CLKL-ADIV)}$	FSMC_CLK low to FSMC_AD[15:0] invalid	0	-	ns
$t_{su(ADV-CLKH)}$	FSMC_A/D[15:0] valid data before FSMC_CLK high	6	-	ns
$t_{h(CLKH-ADV)}$	FSMC_A/D[15:0] valid data after FSMC_CLK high	0	-	ns
$t_{su(NWAITV-CLKH)}$	FSMC_NWAIT valid before FSMC_CLK high	8	-	ns
$t_{h(CLKH-NWAITV)}$	FSMC_NWAIT valid after FSMC_CLK high	2	-	ns

1. C_L = 15 pF.
2. Guaranteed by characterization results.

Figure 29. Synchronous multiplexed PSRAM write timings

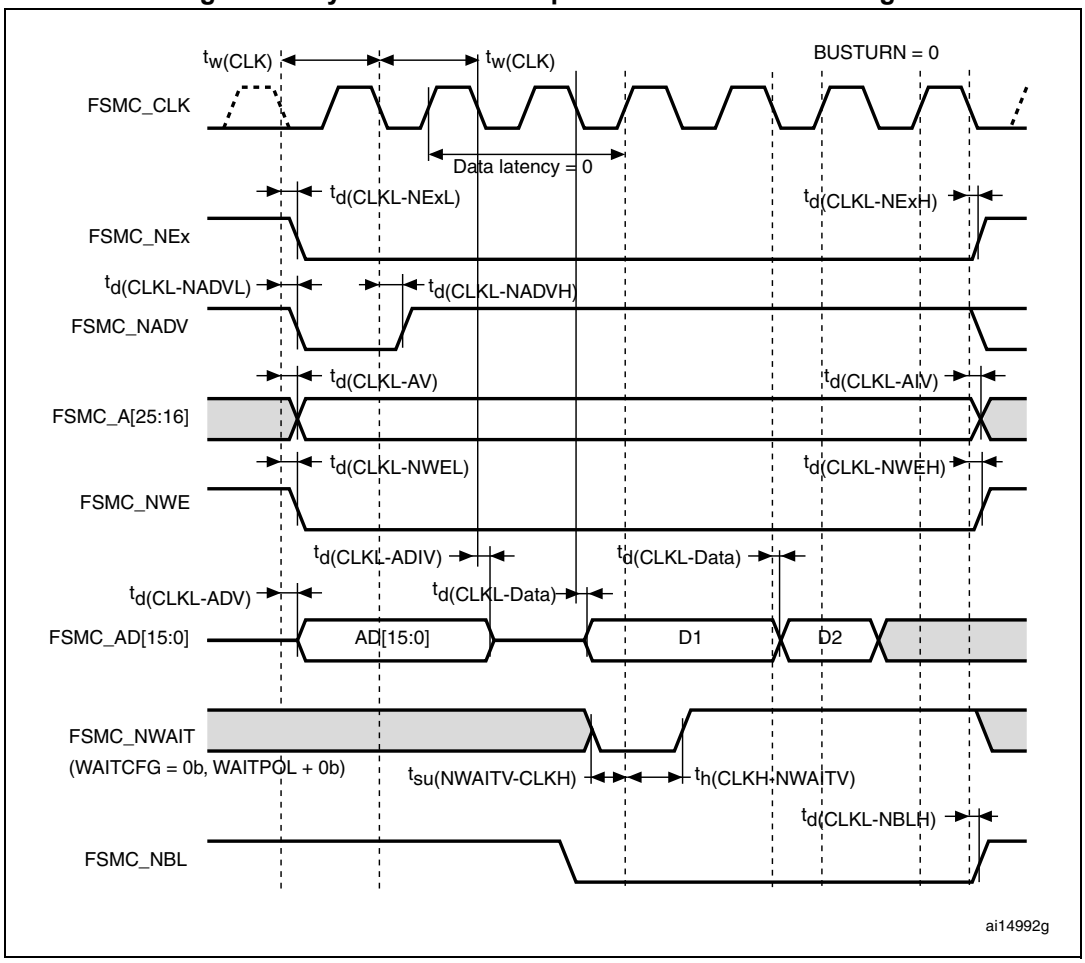

Table 36. Synchronous multiplexed PSRAM write timings(1)(2)

Symbol	Parameter	Min	Max	Unit
$t_{w(CLK)}$	FSMC_CLK period	27.7	-	ns
$t_{d(CLKL-NExL)}$	FSMC_CLK low to FSMC_Nex low (x = 0...2)	-	2	ns
$t_{d(CLKL-NExH)}$	FSMC_CLK low to FSMC_NEx high (x = 0...2)	2	-	ns
$t_{d(CLKL-NADVL)}$	FSMC_CLK low to FSMC_NADV low	-	4	ns
$t_{d(CLKL-NADVH)}$	FSMC_CLK low to FSMC_NADV high	5	-	ns
$t_{d(CLKL-AV)}$	FSMC_CLK low to FSMC_Ax valid (x = 16...25)	-	0	ns
$t_{d(CLKL-AIV)}$	FSMC_CLK low to FSMC_Ax invalid (x = 16...25)	2	-	ns
$t_{d(CLKL-NWEL)}$	FSMC_CLK low to FSMC_NWE low	-	1	ns
$t_{d(CLKL-NWEH)}$	FSMC_CLK low to FSMC_NWE high	1	-	ns
$t_{d(CLKL-ADV)}$	FSMC_CLK low to FSMC_AD[15:0] valid	-	12	ns
$t_{d(CLKL-ADIV)}$	FSMC_CLK low to FSMC_AD[15:0] invalid	3	-	ns
$t_{d(CLKL-Data)}$	FSMC_A/D[15:0] valid after FSMC_CLK low	-	6	ns
$t_{d(CLKL-NBLH)}$	FSMC_CLK low to FSMC_NBL high	1	-	ns
$t_{su(NWAITV-CLKH)}$	FSMC_NWAIT valid before FSMC_CLK high	7	-	ns
$t_{h(CLKH-NWAITV)}$	FSMC_NWAIT valid after FSMC_CLK high	2	-	ns

1. C_L = 15 pF.
2. Guaranteed by characterization results.

Figure 30. Synchronous non-multiplexed NOR/PSRAM read timings

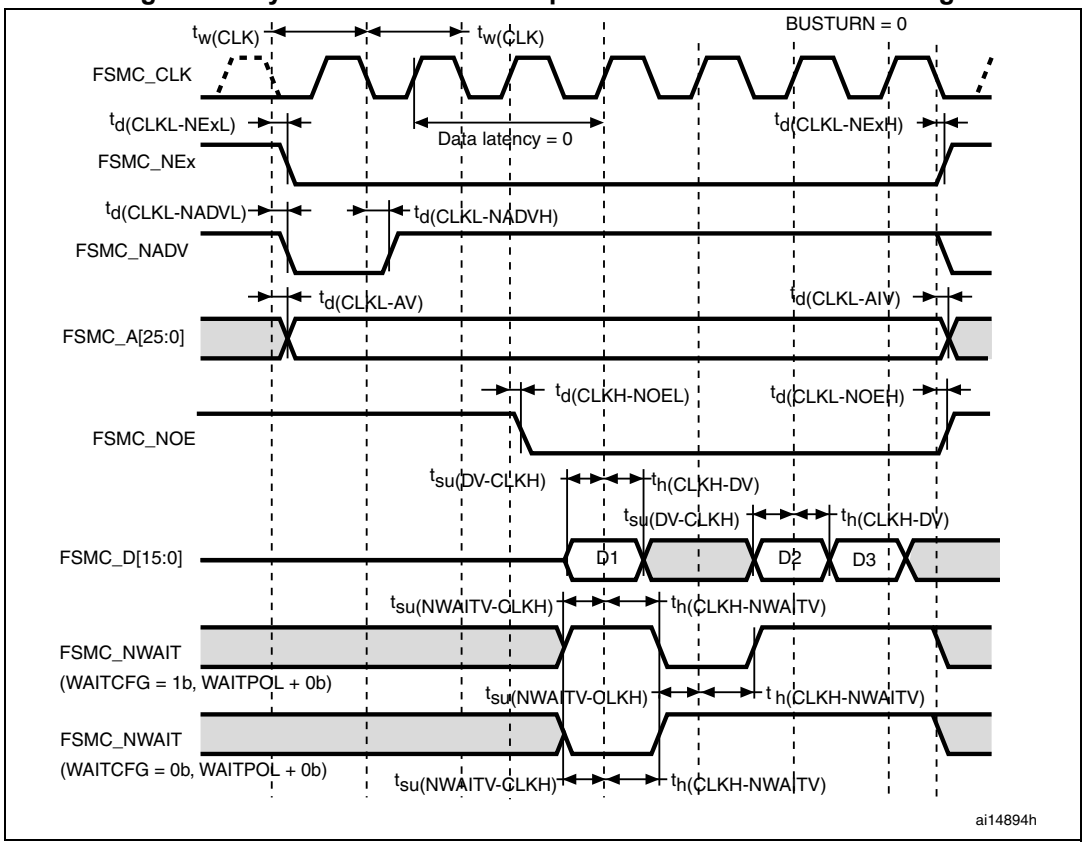

Table 37. Synchronous non-multiplexed NOR/PSRAM read timings(1)(2)

Symbol	Parameter	Min	Max	Unit
$t_{w(CLK)}$	FSMC_CLK period	27.7	-	ns
$t_{d(CLKL-NExL)}$	FSMC_CLK low to FSMC_NEx low (x = 0...2)	-	1.5	ns
$t_{d(CLKL-NExH)}$	FSMC_CLK low to FSMC_NEx high (x = 0...2)	2	-	ns
$t_{d(CLKL-NADVL)}$	FSMC_CLK low to FSMC_NADV low	-	4	ns
$t_{d(CLKL-NADVH)}$	FSMC_CLK low to FSMC_NADV high	5	-	ns
$t_{d(CLKL-AV)}$	FSMC_CLK low to FSMC_Ax valid (x = 0...25)	-	0	ns
$t_{d(CLKL-AIV)}$	FSMC_CLK low to FSMC_Ax invalid (x = 0...25)	4	-	ns
$t_{d(CLKL-NOEL)}$	FSMC_CLK low to FSMC_NOE low	-	1.5	ns
$t_{d(CLKL-NOEH)}$	FSMC_CLK low to FSMC_NOE high	1.5	-	ns
$t_{su(DV-CLKH)}$	FSMC_D[15:0] valid data before FSMC_CLK high	6.5	-	ns
$t_{h(CLKH-DV)}$	FSMC_D[15:0] valid data after FSMC_CLK high	7	-	ns
$t_{su(NWAITV-CLKH)}$	FSMC_NWAIT valid before FSMC_SMCLK high	7	-	ns
$t_{h(CLKH-NWAITV)}$	FSMC_NWAIT valid after FSMC_CLK high	2	-	ns

1. C_L = 15 pF.
2. Guaranteed by characterization results.

Figure 31. Synchronous non-multiplexed PSRAM write timings

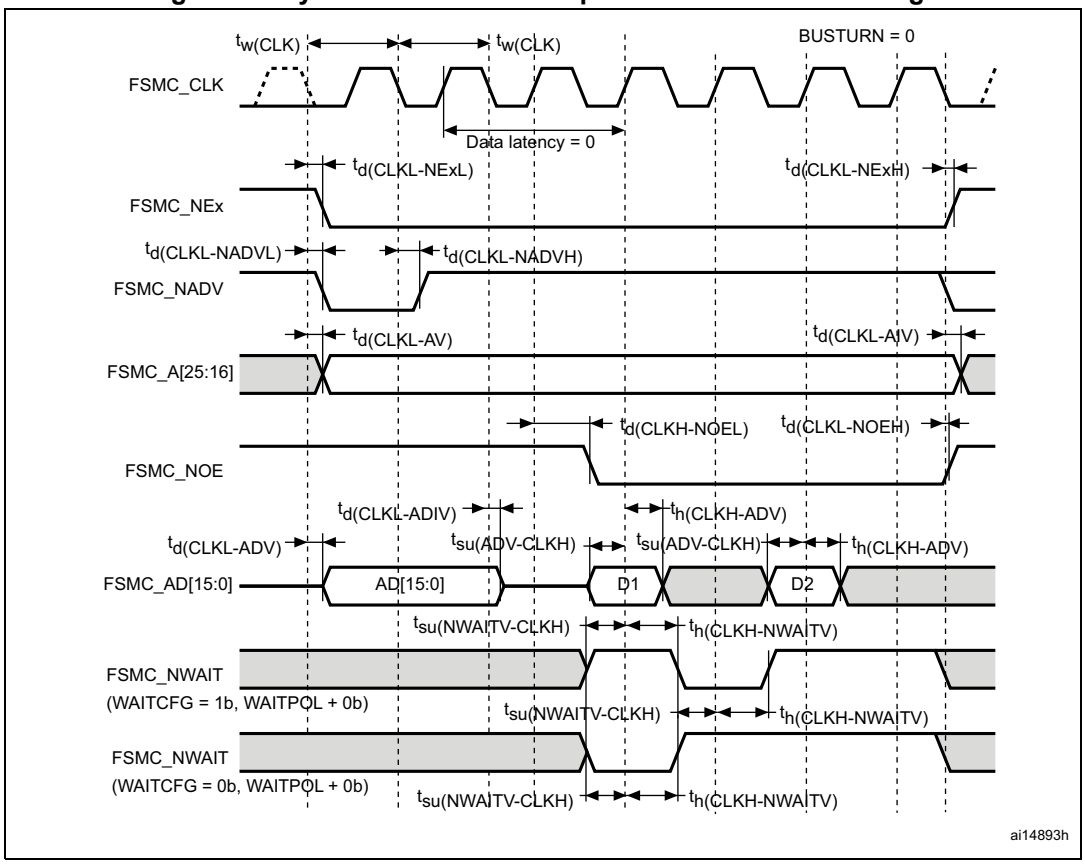

Table 38. Synchronous non-multiplexed PSRAM write timings(1)(2)

Symbol	Parameter	Min	Max	Unit
$t_{w(CLK)}$	FSMC_CLK period	27.7	-	ns
$t_{d(CLKL-NExL)}$	FSMC_CLK low to FSMC_NEx low (x = 0...2)	-	2	ns
$t_{d(CLKL-NExH)}$	FSMC_CLK low to FSMC_NEx high (x = 0...2)	2	-	ns
$t_{d(CLKL-NADVL)}$	FSMC_CLK low to FSMC_NADV low	-	4	ns
$t_{d(CLKL-NADVH)}$	FSMC_CLK low to FSMC_NADV high	5	-	ns
$t_{d(CLKL-AV)}$	FSMC_CLK low to FSMC_Ax valid (x = 16...25)	-	0	ns
$t_{d(CLKL-AIV)}$	FSMC_CLK low to FSMC_Ax invalid (x = 16...25)	2	-	ns
$t_{d(CLKL-NWEL)}$	FSMC_CLK low to FSMC_NWE low	-	1	ns
$t_{d(CLKL-NWEH)}$	FSMC_CLK low to FSMC_NWE high	1	-	ns
$t_{d(CLKL-Data)}$	FSMC_D[15:0] valid data after FSMC_CLK low	-	6	ns
$t_{d(CLKL-NBLH)}$	FSMC_CLK low to FSMC_NBL high	1	-	ns
$t_{su(NWAITV-CLKH)}$	FSMC_NWAIT valid before FSMC_CLK high	7	-	ns
$t_{h(CLKH-NWAITV)}$	FSMC_NWAIT valid after FSMC_CLK high	2	-	ns

1. C_L = 15 pF.
2. Guaranteed by characterization results.

PC Card/CompactFlash controller waveforms and timings

Figure 32 through *Figure 37* represent synchronous waveforms and *Table 39* provides the corresponding timings. The results shown in this table are obtained with the following FSMC configuration:

- COM.FSMC_SetupTime = 0x04;
- COM.FSMC_WaitSetupTime = 0x07;
- COM.FSMC_HoldSetupTime = 0x04;
- COM.FSMC_HiZSetupTime = 0x00;
- ATT.FSMC_SetupTime = 0x04;
- ATT.FSMC_WaitSetupTime = 0x07;
- ATT.FSMC_HoldSetupTime = 0x04;
- ATT.FSMC_HiZSetupTime = 0x00;
- IO.FSMC_SetupTime = 0x04;
- IO.FSMC_WaitSetupTime = 0x07;
- IO.FSMC_HoldSetupTime = 0x04;
- IO.FSMC_HiZSetupTime = 0x00;
- TCLRSetupTime = 0;
- TARSetupTime = 0;

Figure 32. PC Card/CompactFlash controller waveforms for common memory read access

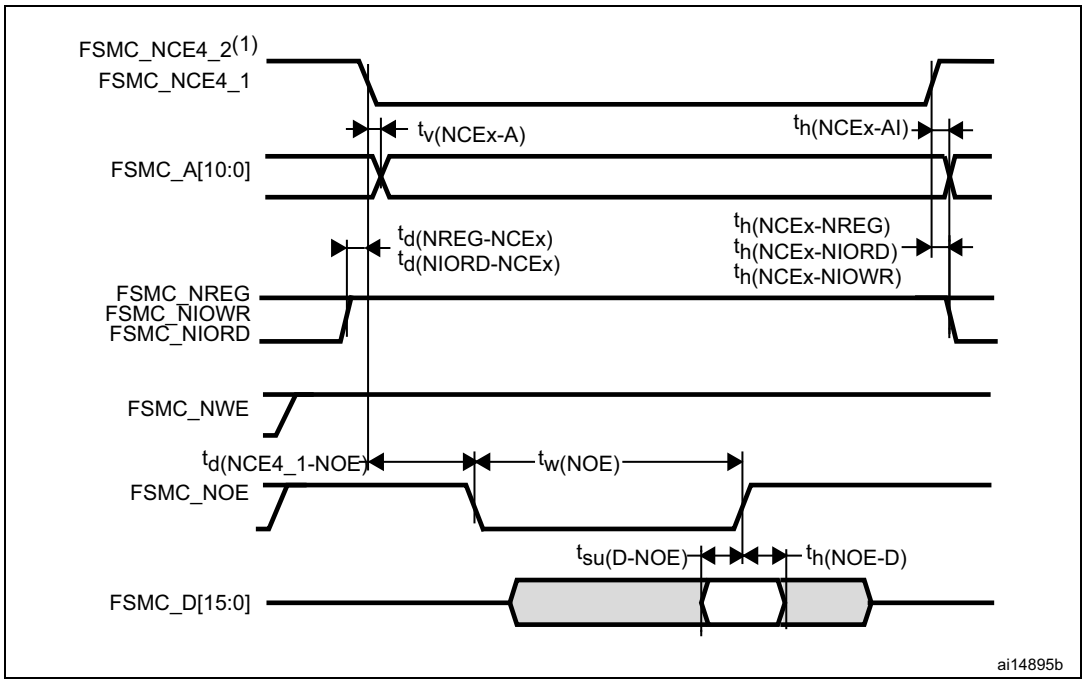

1. FSMC_NCE4_2 remains high (inactive during 8-bit access.

Figure 33. PC Card/CompactFlash controller waveforms for common memory write access

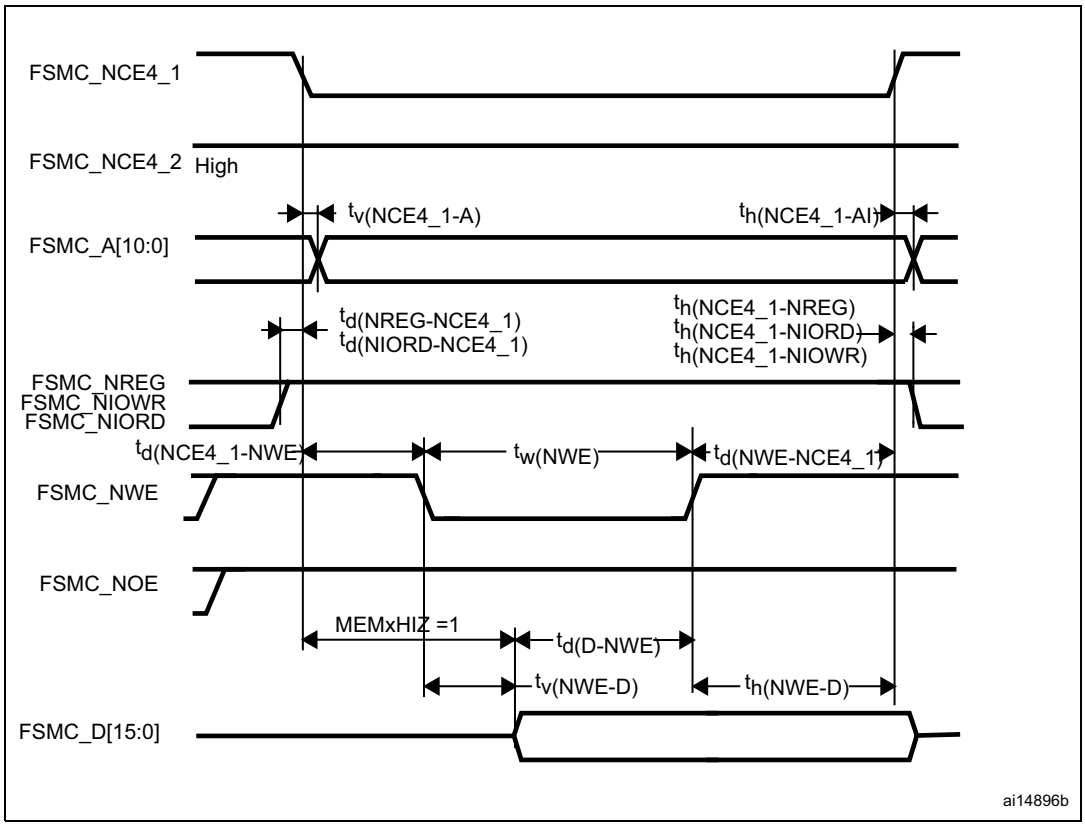

Figure 34. PC Card/CompactFlash controller waveforms for attribute memory read access

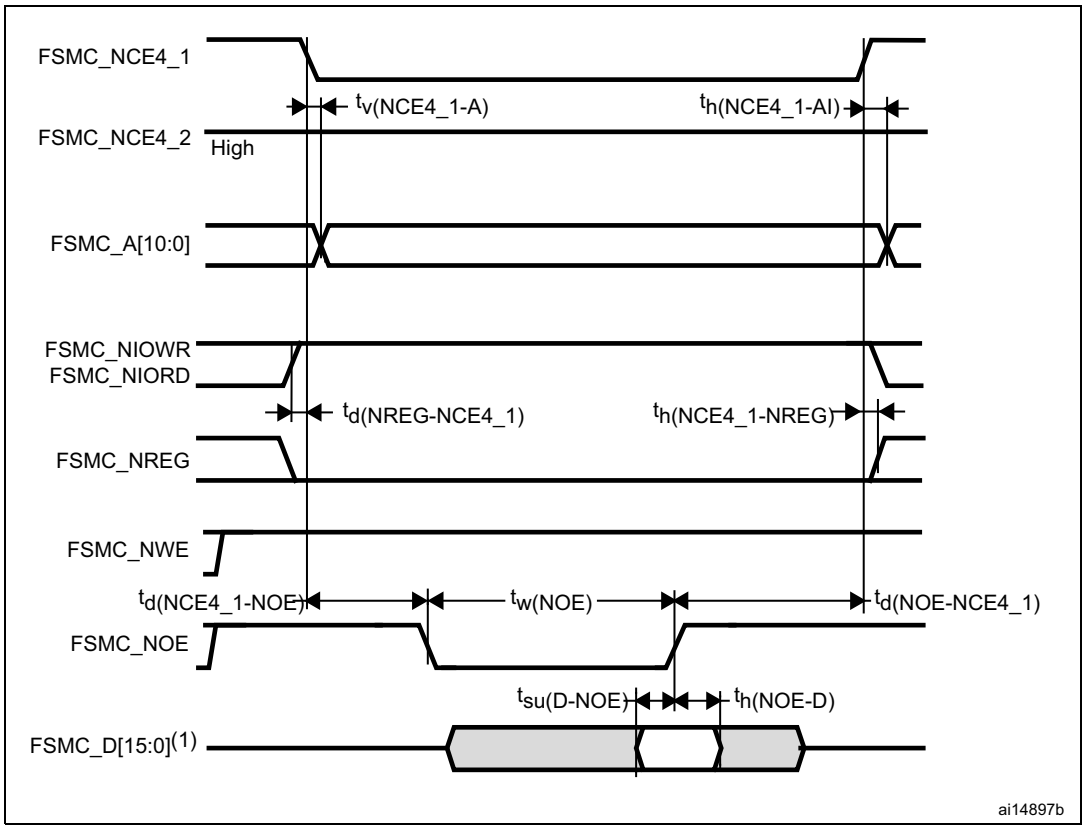

1. Only data bits 0...7 are read (bits 8...15 are disregarded).

Figure 35. PC Card/CompactFlash controller waveforms for attribute memory write access

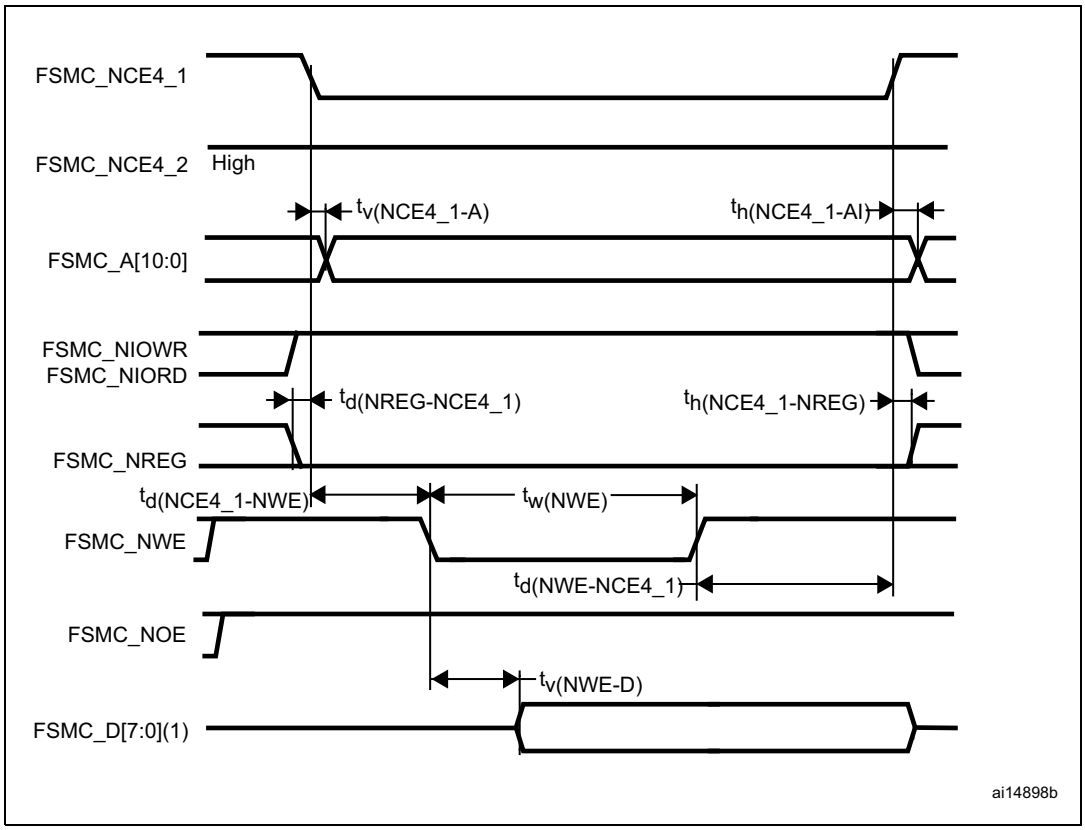

1. Only data bits 0...7 are driven (bits 8...15 remains HiZ).

Figure 36. PC Card/CompactFlash controller waveforms for I/O space read access

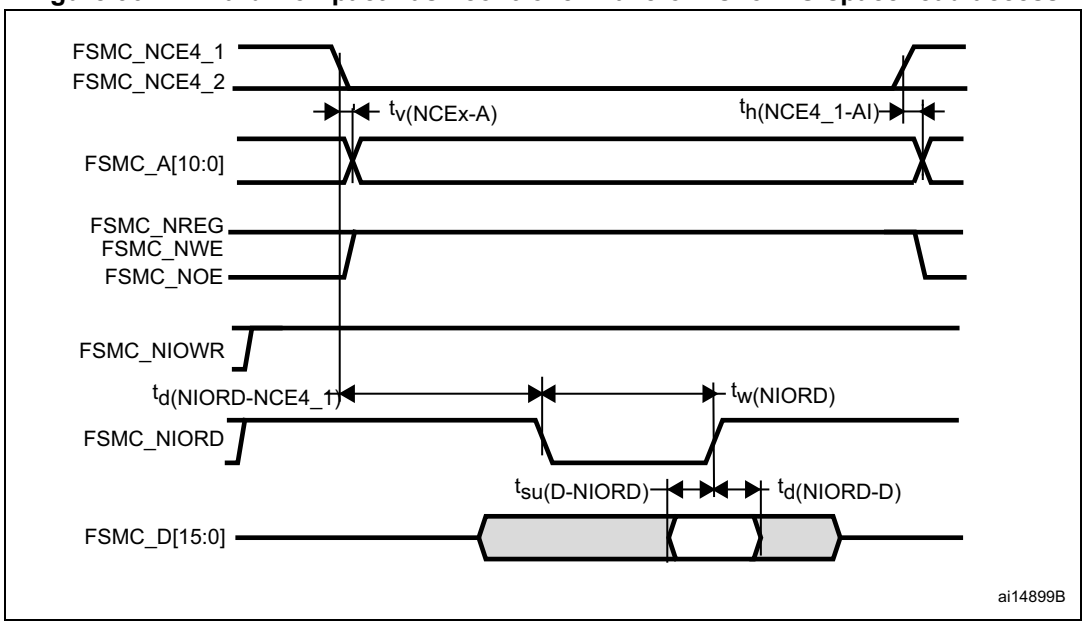

Figure 37. PC Card/CompactFlash controller waveforms for I/O space write access

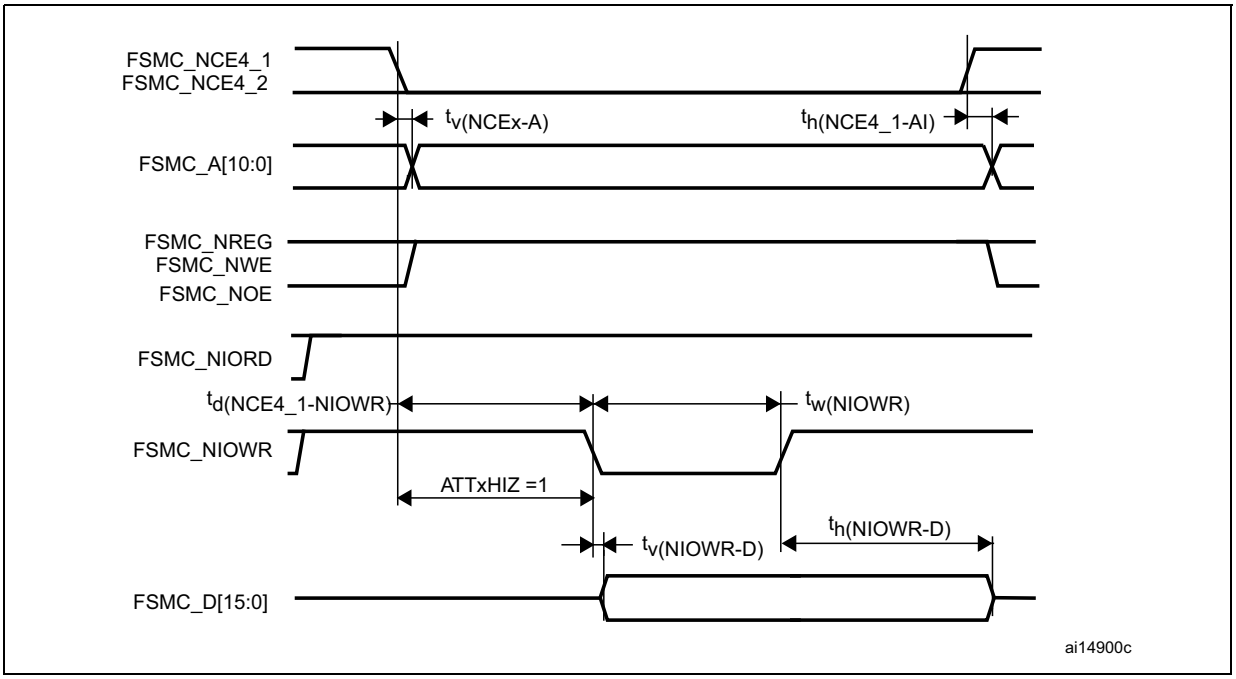

Table 39. Switching characteristics for PC Card/CF read and write cycles(1)(2)

Symbol	Parameter	Min	Max	Unit
$t_{v(NCEx-A)}$ $t_{v(NCE4_1-A)}$	FSMC_NCEx low (x = 4_1/4_2) to FSMC_Ay valid (y = 0...10) FSMC_NCE4_1 low (x = 4_1/4_2) to FSMC_Ay valid (y = 0...10)	-	0	ns
$t_{h(NCEx-AI)}$ $t_{h(NCE4_1-AI)}$	FSMC_NCEx high (x = 4_1/4_2) to FSMC_Ax invalid (x = 0...10) FSMC_NCE4_1 high (x = 4_1/4_2) to FSMC_Ax invalid (x = 0...10)	2.5	-	ns
$t_{d(NREG-NCEx)}$ $t_{d(NREG-NCE4_1)}$	FSMC_NCEx low to FSMC_NREG valid FSMC_NCE4_1 low to FSMC_NREG valid	-	5	ns
$t_{h(NCEx-NREG)}$ $t_{h(NCE4_1-NREG)}$	FSMC_NCEx high to FSMC_NREG invalid FSMC_NCE4_1 high to FSMC_NREG invalid	t_{HCLK} + 3	-	ns
$t_{d(NCE4_1-NOE)}$	FSMC_NCE4_1 low to FSMC_NOE low	-	$5t_{HCLK}$ + 2	ns
$t_{w(NOE)}$	FSMC_NOE low width	$8t_{HCLK}$ –1.5	$8t_{HCLK}$ + 1	ns
$t_{d(NOE-NCE4_1}$	FSMC_NOE high to FSMC_NCE4_1 high	$5t_{HCLK}$ + 2	-	ns
$t_{su(D-NOE)}$	FSMC_D[15:0] valid data before FSMC_NOE high	25	-	ns
$t_{h(NOE-D)}$	FSMC_D[15:0] valid data after FSMC_NOE high	15	-	ns
$t_{w(NWE)}$	FSMC_NWE low width	$8t_{HCLK}$ – 1	$8t_{HCLK}$ + 2	ns
$t_{d(NWE-NCE4_1)}$	FSMC_NWE high to FSMC_NCE4_1 high	$5t_{HCLK}$ + 2	-	ns
$t_{d(NCE4_1-NWE)}$	FSMC_NCE4_1 low to FSMC_NWE low	-	$5t_{HCLK}$ + 1.5	ns
$t_{v(NWE-D)}$	FSMC_NWE low to FSMC_D[15:0] valid	-	0	ns
$t_{h(NWE-D)}$	FSMC_NWE high to FSMC_D[15:0] invalid	$11t_{HCLK}$	-	ns
$t_{d(D-NWE)}$	FSMC_D[15:0] valid before FSMC_NWE high	$13t_{HCLK}$	-	ns

Table 39. Switching characteristics for PC Card/CF read and write cycles(1)(2) (continued)

Symbol	Parameter	Min	Max	Unit
$t_{w(NIOWR)}$	FSMC_NIOWR low width	$8t_{HCLK}$ + 3	-	ns
$t_{v(NIOWR-D)}$	FSMC_NIOWR low to FSMC_D[15:0] valid	-	$5t_{HCLK}$ +1	ns
$t_{h(NIOWR-D)}$	FSMC_NIOWR high to FSMC_D[15:0] invalid	$11t_{HCLK}$	-	ns
$t_{d(NCE4_1-NIOWR)}$	FSMC_NCE4_1 low to FSMC_NIOWR valid	-	$5t_{HCLK}$+3ns	ns
$t_{h(NCEx-NIOWR)}$ $t_{h(NCE4_1-NIOWR)}$	FSMC_NCEx high to FSMC_NIOWR invalid FSMC_NCE4_1 high to FSMC_NIOWR invalid	$5t_{HCLK}$ – 5	-	ns
$t_{d(NIORD-NCEx)}$ $t_{d(NIORD-NCE4_1)}$	FSMC_NCEx low to FSMC_NIORD valid FSMC_NCE4_1 low to FSMC_NIORD valid	-	$5t_{HCLK}$ + 2.5	ns
$t_{h(NCEx-NIORD)}$ $t_{h(NCE4_1-NIORD)}$	FSMC_NCEx high to FSMC_NIORD invalid FSMC_NCE4_1 high to FSMC_NIORD invalid	$5t_{HCLK}$ – 5	-	ns
$t_{su(D-NIORD)}$	FSMC_D[15:0] valid before FSMC_NIORD high	4.5	-	ns
$t_{d(NIORD-D)}$	FSMC_D[15:0] valid after FSMC_NIORD high	9	-	ns
$t_{w(NIORD)}$	FSMC_NIORD low width	$8t_{HCLK}$ + 2	-	ns

1. C_L = 15 pF.
2. Guaranteed by characterization results.

NAND controller waveforms and timings

Figure 38 through *Figure 41* represent synchronous waveforms and *Table 39* provides the corresponding timings. The results shown in this table are obtained with the following FSMC configuration:

- COM.FSMC_SetupTime = 0x01;
- COM.FSMC_WaitSetupTime = 0x03;
- COM.FSMC_HoldSetupTime = 0x02;
- COM.FSMC_HiZSetupTime = 0x01;
- ATT.FSMC_SetupTime = 0x01;
- ATT.FSMC_WaitSetupTime = 0x03;
- ATT.FSMC_HoldSetupTime = 0x02;
- ATT.FSMC_HiZSetupTime = 0x01;
- Bank = FSMC_Bank_NAND;
- MemoryDataWidth = FSMC_MemoryDataWidth_16b;
- ECC = FSMC_ECC_Enable;
- ECCPageSize = FSMC_ECCPageSize_512Bytes;
- TCLRSetupTime = 0;
- TARSetupTime = 0;

Figure 38. NAND controller waveforms for read access

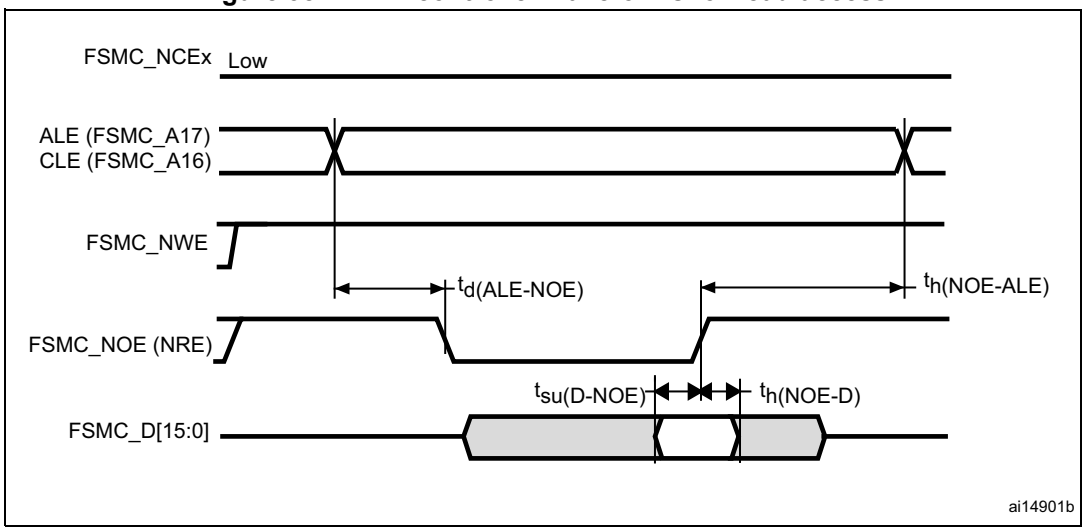

Figure 39. NAND controller waveforms for write access

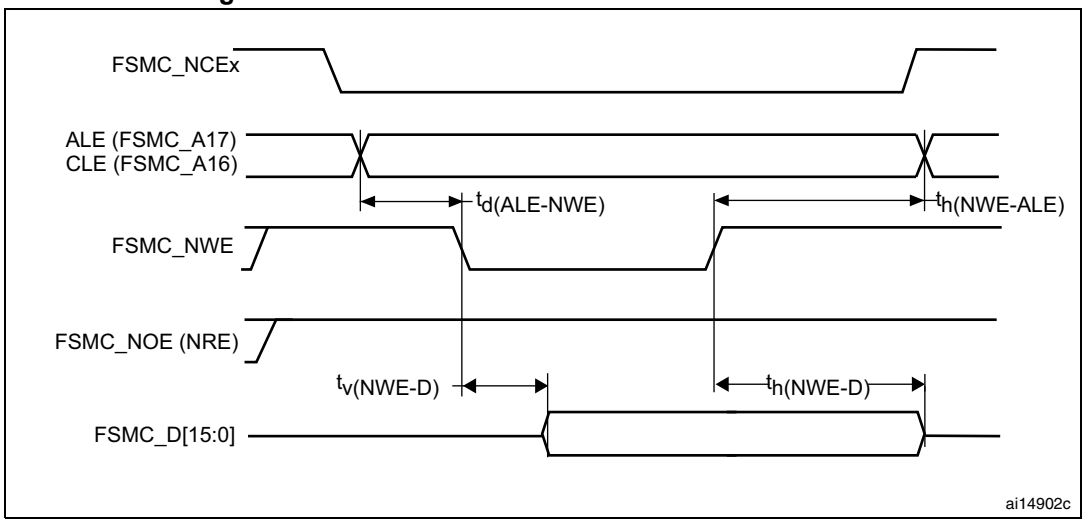

Figure 40. NAND controller waveforms for common memory read access

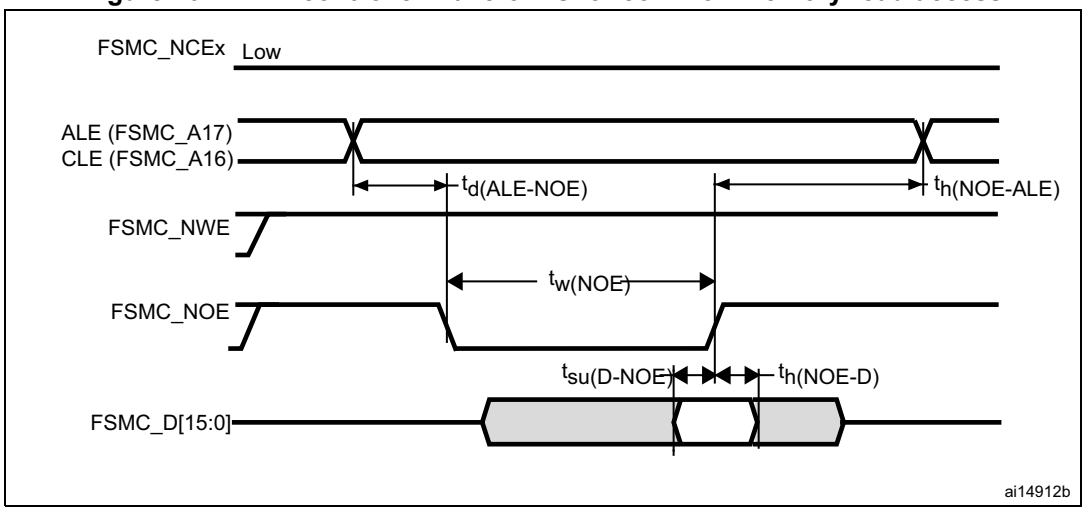

Figure 41. NAND controller waveforms for common memory write access

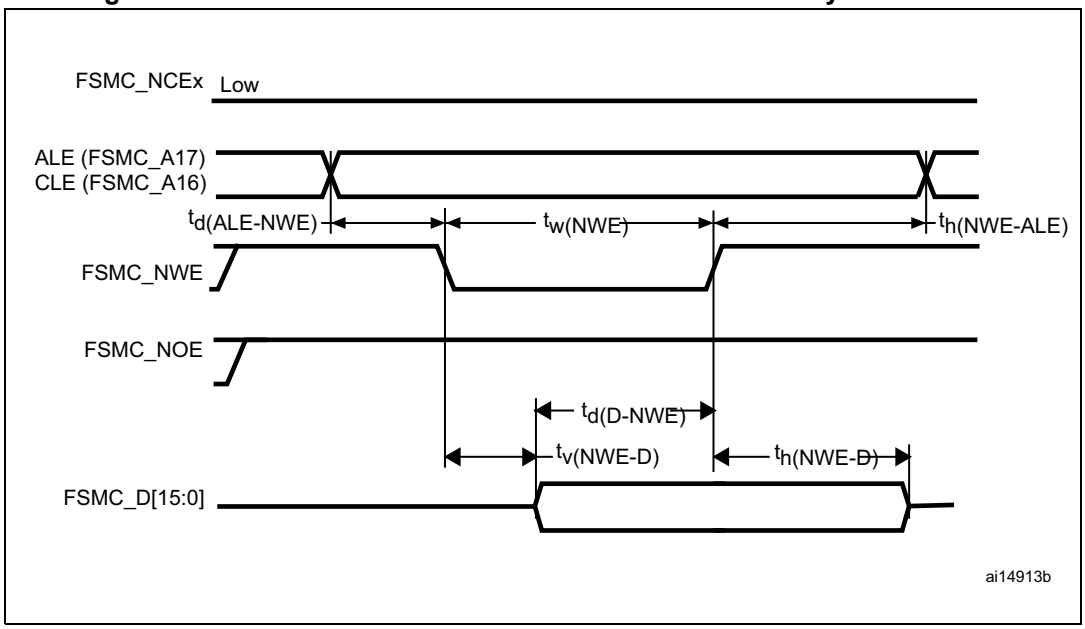

Table 40. Switching characteristics for NAND Flash read and write cycles(1)

Symbol	Parameter	Min	Max	Unit
$t_{d(D-NWE)}$(2)	FSMC_D[15:0] valid before FSMC_NWE high	$5t_{HCLK}$ + 12	-	ns
$t_{w(NOE)}$(2)	FSMC_NWE low width	$4t_{HCLK-1.5}$	$4t_{HCLK+1.5}$	ns
$t_{su(D-NOE)}$(2)	FSMC_D[15:0] valid data before FSMC_NOE high	25	-	ns
$t_{h(NOE-D)}$(2)	FSMC_D[15:0] valid data after FSMC_NOE high	7	-	-
$t_{w(NWE)}$(2)	FSMC_NWE low width	$4t_{HCLK-1}$	$4t_{HCLK+1}$	ns
$t_{v(NWE-D)}$(2)	FSMC_NWE low to FSMC_D[15:0] valid	-	0	ns
$t_{h(NWE-D)}$(2)	FSMC_NWE high to FSMC_D[15:0] invalid	$2t_{HCLK}$ + 4	-	ns
$t_{d(ALE-NWE)}$(3)	FSMC_ALE valid before FSMC_NWE low	-	$3t_{HCLK}$ + 1.5	ns
$t_{h(NWE-ALE)}$(3)	FSMC_NWE high to FSMC_ALE invalid	$3t_{HCLK}$ + 4.5	-	ns
$t_{d(ALE-NOE)}$(3)	FSMC_ALE valid before FSMC_NOE low	-	$3t_{HCLK}$+ 2	ns
$t_{h(NOE-ALE)}$(3)	FSMC_NWE high to FSMC_ALE invalid	$3t_{HCLK}$+ 4.5	-	ns

1. C_L = 15 pF.
2. Guaranteed by characterization results.
3. Guaranteed by design.

5.3.11 EMC characteristics

Susceptibility tests are performed on a sample basis during device characterization.

Functional EMS (electromagnetic susceptibility)

While a simple application is executed on the device (toggling 2 LEDs through I/O ports). the device is stressed by two electromagnetic events until a failure occurs. The failure is indicated by the LEDs:

- **Electrostatic discharge (ESD)** (positive and negative) is applied to all device pins until a functional disturbance occurs. This test is compliant with the IEC 61000-4-2 standard.
- **FTB**: A Burst of Fast Transient voltage (positive and negative) is applied to V_{DD} and V_{SS} through a 100 pF capacitor, until a functional disturbance occurs. This test is compliant with the IEC 61000-4-4 standard.

A device reset allows normal operations to be resumed.

The test results are given in *Table 41*. They are based on the EMS levels and classes defined in application note AN1709.

Table 41. EMS characteristics

Symbol	Parameter	Conditions	Level/ Class
V_{FESD}	Voltage limits to be applied on any I/O pin to induce a functional disturbance	V_{DD} = 3.3 V, LQFP144, T_A = +25 °C, f_{HCLK} = 72 MHz conforms to IEC 61000-4-2	2B
V_{EFTB}	Fast transient voltage burst limits to be applied through 100 pF on V_{DD} and V_{SS} pins to induce a functional disturbance	V_{DD} = 3.3 V, LQFP144, T_A = +25 °C, f_{HCLK} = 72 MHz conforms to IEC 61000-4-4	4A

Designing hardened software to avoid noise problems

EMC characterization and optimization are performed at component level with a typical application environment and simplified MCU software. It should be noted that good EMC performance is highly dependent on the user application and the software in particular.

Therefore it is recommended that the user applies EMC software optimization and prequalification tests in relation with the EMC level requested for his application.

Software recommendations

The software flowchart must include the management of runaway conditions such as:

- Corrupted program counter
- Unexpected reset
- Critical Data corruption (control registers...)

Prequalification trials

Most of the common failures (unexpected reset and program counter corruption) can be reproduced by manually forcing a low state on the NRST pin or the Oscillator pins for 1 second.

To complete these trials, ESD stress can be applied directly on the device, over the range of specification values. When unexpected behavior is detected, the software can be hardened to prevent unrecoverable errors occurring (see application note AN1015).

Electromagnetic Interference (EMI)

The electromagnetic field emitted by the device are monitored while a simple application is executed (toggling 2 LEDs through the I/O ports). This emission test is compliant with IEC 61967-2 standard which specifies the test board and the pin loading.

Table 42. EMI characteristics

Symbol	Parameter	Conditions	Monitored frequency band	Max vs. [f_{HSE}/f_{HCLK}]		Unit
				8/48 MHz	8/72 MHz	
S_{EMI}	Peak level	V_{DD} = 3.3 V, T_A = 25 °C, LQFP144 package compliant with IEC 61967-2	0.1 to 30 MHz	8	12	dBµV
			30 to 130 MHz	31	21	
			130 MHz to 1GHz	28	33	
			SAE EMI Level	4	4	-

5.3.12 Absolute maximum ratings (electrical sensitivity)

Based on three different tests (ESD, LU) using specific measurement methods, the device is stressed in order to determine its performance in terms of electrical sensitivity.

Electrostatic discharge (ESD)

Electrostatic discharges (a positive then a negative pulse separated by 1 second) are applied to the pins of each sample according to each pin combination. The sample size depends on the number of supply pins in the device (3 parts × (n+1) supply pins). This test conforms to the JESD22-A114/C101 standard.

Table 43. ESD absolute maximum ratings

Symbol	Ratings	Conditions	Class	Maximum value(1)	Unit
$V_{ESD(HBM)}$	Electrostatic discharge voltage (human body model)	T_A = +25 °C, conforming to JESD22-A114	2	2000	V
$V_{ESD(CDM)}$	Electrostatic discharge voltage (charge device model)	T_A = +25 °C, conforming to JESD22-C101	III	500	

1. Guaranteed by characterization results.

Static latch-up

Two complementary static tests are required on six parts to assess the latch-up performance:

- A supply overvoltage is applied to each power supply pin
- A current injection is applied to each input, output and configurable I/O pin

These tests are compliant with EIA/JESD 78A IC latch-up standard.

Table 44. Electrical sensitivities

Symbol	Parameter	Conditions	Class
LU	Static latch-up class	T_A = +105 °C conforming to JESD78A	II level A

5.3.13 I/O current injection characteristics

As a general rule, current injection to the I/O pins, due to external voltage below V_{SS} or above V_{DD} (for standard, 3 V-capable I/O pins) should be avoided during normal product operation. However, in order to give an indication of the robustness of the microcontroller in cases when abnormal injection accidentally happens, susceptibility tests are performed on a sample basis during device characterization.

Functional susceptibilty to I/O current injection

While a simple application is executed on the device, the device is stressed by injecting current into the I/O pins programmed in floating input mode. While current is injected into the I/O pin, one at a time, the device is checked for functional failures.

The failure is indicated by an out of range parameter: ADC error above a certain limit (>5 LSB TUE), out of spec current injection on adjacent pins or other functional failure (for example reset, oscillator frequency deviation).

The test results are given in *Table 45*

Table 45. I/O current injection susceptibility

Symbol	Description	Functional susceptibility		Unit
		Negative injection	Positive injection	
I_{INJ}	Injected current on OSC_IN32, OSC_OUT32, PA4, PA5, PC13	-0	+0	mA
	Injected current on all FT pins	-5	+0	
	Injected current on any other pin	-5	+5	

5.3.14 I/O port characteristics

General input/output characteristics

Unless otherwise specified, the parameters given in *Table 46* are derived from tests performed under the conditions summarized in *Table 10*. All I/Os are CMOS and TTL compliant.

Table 46. I/O static characteristics

Symbol	Parameter	Conditions	Min	Typ	Max	Unit
V_{IL}	Standard IO input low level voltage	-	–0.3	-	0.28*(V_{DD}-2 V)+0.8 V	V
	IO FT(1) input low level voltage		–0.3	-	0.32*(V_{DD}-2 V)+0.75 V	V
V_{IH}	Standard IO input high level voltage	-	0.41*(V_{DD}-2 V)+1.3 V	-	V_{DD}+0.3	V
	IO FT(1) input high level voltage	V_{DD} > 2 V	0.42*(V_{DD}-2 V)+1 V	-	5.5	V
		V_{DD} ≤2 V			5.2	
V_{hys}	Standard IO Schmitt trigger voltage hysteresis(2)	-	200	-	-	mV
	IO FT Schmitt trigger voltage hysteresis(2)		5% V_{DD}(3)	-	-	mV
I_{lkg}	Input leakage current (4)	V_{SS} ≤V_{IN} ≤V_{DD} Standard I/Os	-	-	±1	µA
		V_{IN}= 5 V, I/O FT	-	-	3	
R_{PU}	Weak pull-up equivalent resistor(5)	V_{IN} = V_{SS}	30	40	50	kΩ
R_{PD}	Weak pull-down equivalent resistor(5)	V_{IN} = V_{DD}	30	40	50	kΩ
C_{IO}	I/O pin capacitance	-	-	5	-	pF

1. FT = Five-volt tolerant. In order to sustain a voltage higher than V_{DD}+0.3 the internal pull-up/pull-down resistors must be disabled.
2. Hysteresis voltage between Schmitt trigger switching levels. Guaranteed by characterization results.
3. With a minimum of 100 mV.
4. Leakage could be higher than max. if negative current is injected on adjacent pins.
5. Pull-up and pull-down resistors are designed with a true resistance in series with a switchable PMOS/NMOS. This MOS/NMOS contribution to the series resistance is minimum (~10% order).

All I/Os are CMOS and TTL compliant (no software configuration required). Their characteristics cover more than the strict CMOS-technology or TTL parameters. The coverage of these requirements is shown in *Figure 42* and *Figure 43* for standard I/Os, and in *Figure 44* and *Figure 45* for 5 V tolerant I/Os.

Figure 42. Standard I/O input characteristics - CMOS port

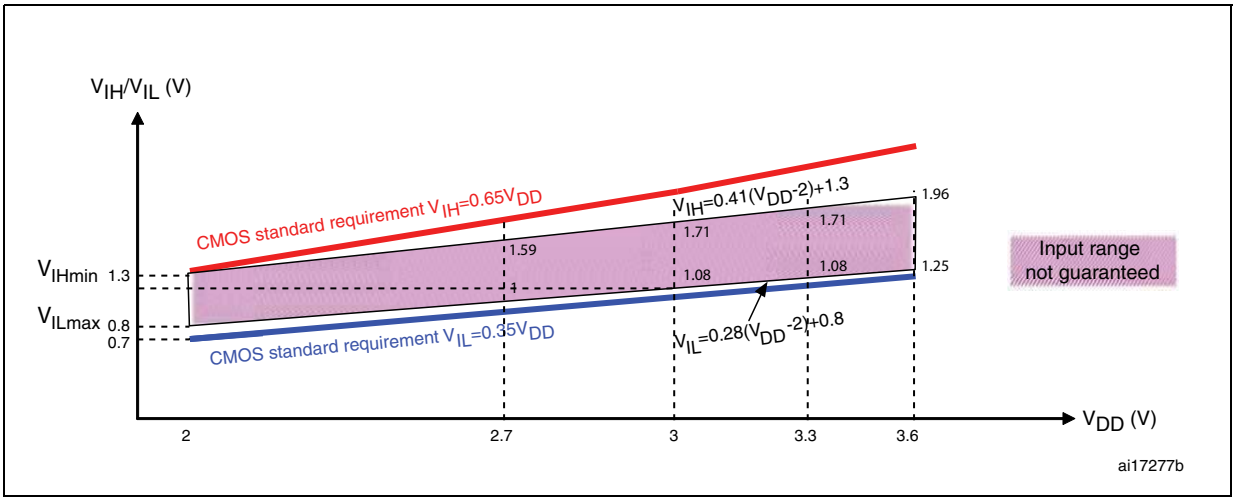

Figure 43. Standard I/O input characteristics - TTL port

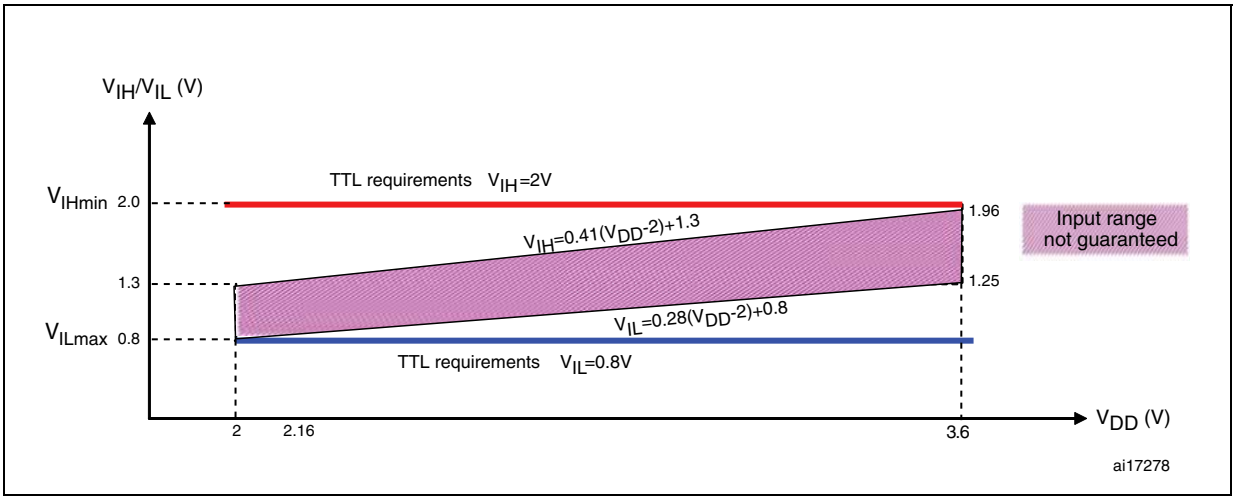

Figure 44. 5 V tolerant I/O input characteristics - CMOS port

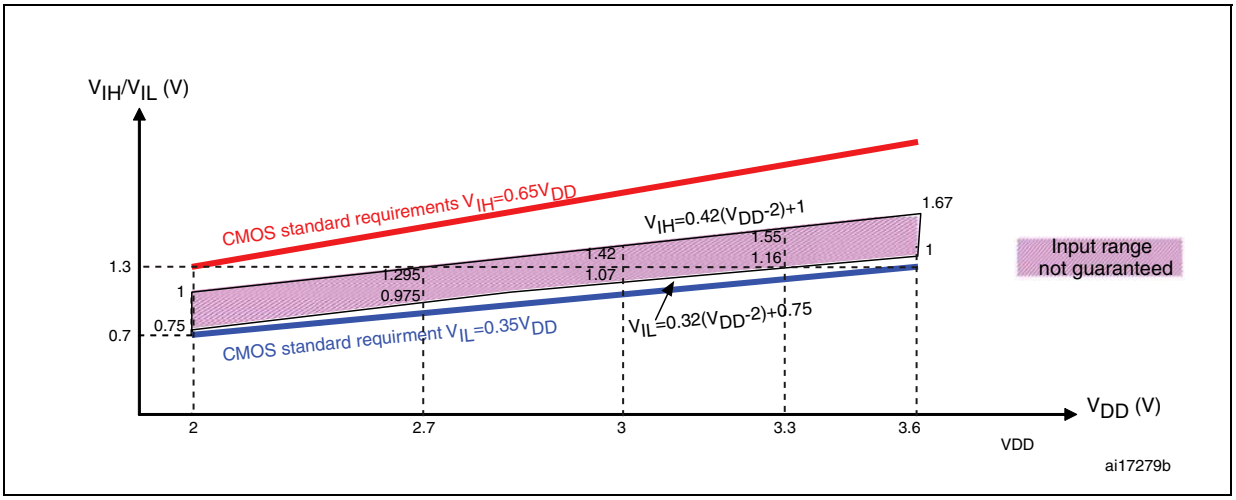

Figure 45. 5 V tolerant I/O input characteristics - TTL port

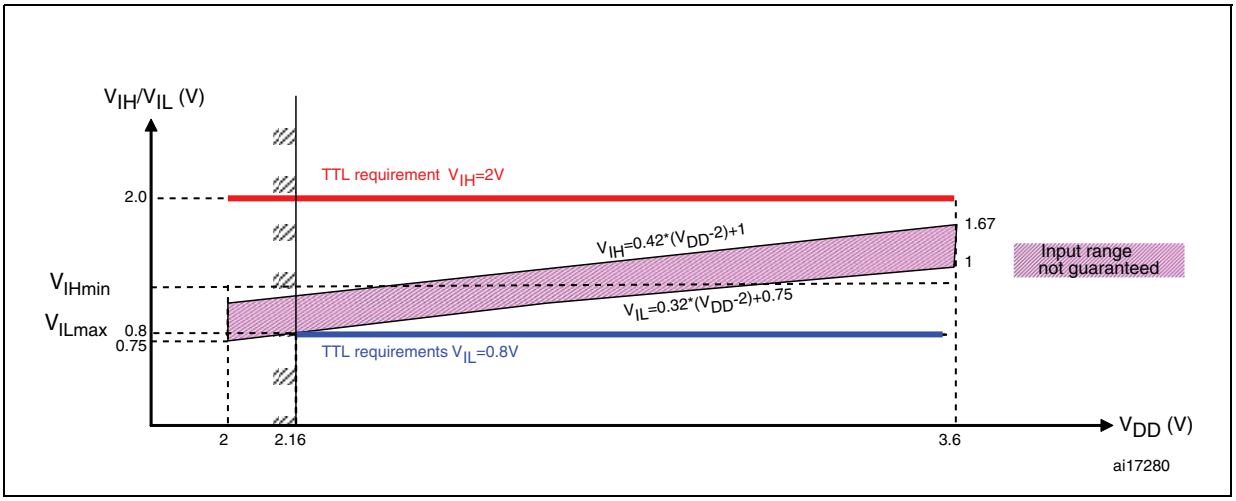

Output driving current

The GPIOs (general purpose input/outputs) can sink or source up to ±8 mA, and sink or source up to ± 20 mA (with a relaxed V_{OL}/V_{OH}) except PC13, PC14 and PC15 which can sink or source up to ±3 mA. When using the GPIOs PC13 to PC15 in output mode, the speed should not exceed 2 MHz with a maximum load of 30 pF.

In the user application, the number of I/O pins which can drive current must be limited to respect the absolute maximum rating specified in *Section 5.2*:

- The sum of the currents sourced by all the I/Os on $V_{DD,}$ plus the maximum Run consumption of the MCU sourced on $V_{DD,}$ cannot exceed the absolute maximum rating I_{VDD} (see *Table 8*).
- The sum of the currents sunk by all the I/Os on V_{SS} plus the maximum Run consumption of the MCU sunk on V_{SS} cannot exceed the absolute maximum rating I_{VSS} (see *Table 8*).

Output voltage levels

Unless otherwise specified, the parameters given in *Table 47* are derived from tests performed under ambient temperature and V_{DD} supply voltage conditions summarized in *Table 10*. All I/Os are CMOS and TTL compliant.

Table 47. Output voltage characteristics

Symbol	Parameter	Conditions	Min	Max	Unit
V_{OL} (1)	Output low level voltage for an I/O pin when 8 pins are sunk at same time	TTL port(3) I_{IO} = +8 mA 2.7 V < V_{DD} < 3.6 V	-	0.4	V
V_{OH} (2)	Output high level voltage for an I/O pin when 8 pins are sourced at same time		V_{DD}–0.4	-	
V_{OL} (1)	Output low level voltage for an I/O pin when 8 pins are sunk at same time	CMOS port(3) I_{IO} =+ 8mA 2.7 V < V_{DD} < 3.6 V	-	0.4	V
V_{OH} (2)	Output high level voltage for an I/O pin when 8 pins are sourced at same time		2.4	-	

Table 47. Output voltage characteristics (continued)

Symbol	Parameter	Conditions	Min	Max	Unit
V_{OL}(1)(4)	Output low level voltage for an I/O pin when 8 pins are sunk at same time	I_{IO} = +20 mA 2.7 V < V_{DD} < 3.6 V	-	1.3	V
V_{OH}(2)(4)	Output high level voltage for an I/O pin when 8 pins are sourced at same time		V_{DD}–1.3	-	
V_{OL}(1)(4)	Output low level voltage for an I/O pin when 8 pins are sunk at same time	I_{IO} = +6 mA 2 V < V_{DD} < 2.7 V	-	0.4	V
V_{OH}(2)(4)	Output high level voltage for an I/O pin when 8 pins are sourced at same time		V_{DD}–0.4	-	

1. The I_{IO} current sunk by the device must always respect the absolute maximum rating specified in *Table 8* and the sum of I_{IO} (I/O ports and control pins) must not exceed I_{VSS}.
2. The I_{IO} current sourced by the device must always respect the absolute maximum rating specified in *Table 8* and the sum of I_{IO} (I/O ports and control pins) must not exceed I_{VDD}.
3. TTL and CMOS outputs are compatible with JEDEC standards JESD36 and JESD52.
4. Guaranteed by characterization results.

Input/output AC characteristics

The definition and values of input/output AC characteristics are given in *Figure 46* and *Table 48*, respectively.

Unless otherwise specified, the parameters given in *Table 48* are derived from tests performed under ambient temperature and V_{DD} supply voltage conditions summarized in *Table 10*.

Table 48. I/O AC characteristics(1)

MODEx[1:0] bit value(1)	Symbol	Parameter	Conditions	Min	Max	Unit
10	$f_{max(IO)out}$	Maximum frequency(2)	C_L = 50 pF, V_{DD} = 2 V to 3.6 V	-	2	MHz
	$t_{f(IO)out}$	Output high to low level fall time	C_L = 50 pF, V_{DD} = 2 V to 3.6 V	-	125(3)	ns
	$t_{r(IO)out}$	Output low to high level rise time		-	125(3)	
01	$f_{max(IO)out}$	Maximum frequency(2)	C_L = 50 pF, V_{DD} = 2 V to 3.6 V	-	10	MHz
	$t_{f(IO)out}$	Output high to low level fall time	C_L = 50 pF, V_{DD} = 2 V to 3.6 V	-	25(3)	ns
	$t_{r(IO)out}$	Output low to high level rise time		-	25(3)	
11	$F_{max(IO)out}$	Maximum frequency(2)	C_L = 30 pF, V_{DD} = 2.7 V to 3.6 V	-	50	MHz
			C_L = 50 pF, V_{DD} = 2.7 V to 3.6 V	-	30	MHz
			C_L = 50 pF, V_{DD} = 2 V to 2.7 V	-	20	MHz
	$t_{f(IO)out}$	Output high to low level fall time	C_L = 30 pF, V_{DD} = 2.7 V to 3.6 V	-	5(3)	ns
			C_L = 50 pF, V_{DD} = 2.7 V to 3.6 V	-	8(3)	
			C_L = 50 pF, V_{DD} = 2 V to 2.7 V	-	12(3)	
	$t_{r(IO)out}$	Output low to high level rise time	C_L = 30 pF, V_{DD} = 2.7 V to 3.6 V	-	5(3)	
			C_L = 50 pF, V_{DD} = 2.7 V to 3.6 V	-	8(3)	
			C_L = 50 pF, V_{DD} = 2 V to 2.7 V	-	12(3)	
-	t_{EXTIpw}	Pulse width of external signals detected by the EXTI controller	-	10	-	ns

1. The I/O speed is configured using the MODEx[1:0] bits. Refer to the STM32F10xxx reference manual for a description of GPIO Port configuration register.
2. The maximum frequency is defined in *Figure 46*.
3. Guaranteed by design.

Figure 46. I/O AC characteristics definition

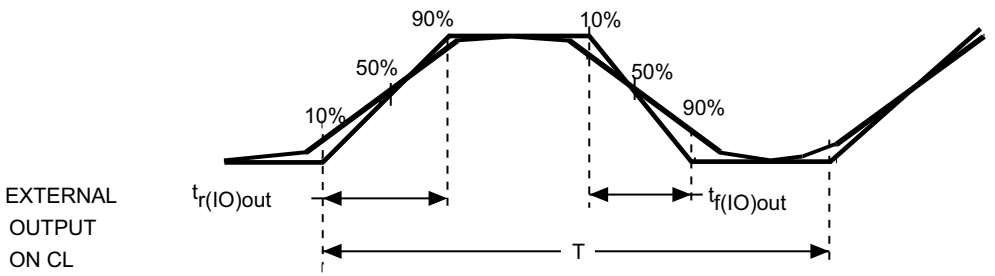

Maximum frequency is achieved if ($t_r + t_f$) ≤ (2/3)T and if the duty cycle is (45-55%) when loaded by CL specified in the table " *I/O AC characteristics*".

ai14131d

5.3.15 NRST pin characteristics

The NRST pin input driver uses CMOS technology. It is connected to a permanent pull-up resistor, R_{PU} (see *Table 46*).

Unless otherwise specified, the parameters given in *Table 49* are derived from tests performed under ambient temperature and V_{DD} supply voltage conditions summarized in *Table 10*.

Table 49. NRST pin characteristics

Symbol	Parameter	Conditions	Min	Typ	Max	Unit
$V_{IL(NRST)}$(1)	NRST Input low level voltage	-	–0.5	-	0.8	V
$V_{IH(NRST)}$(1)	NRST Input high level voltage	-	2	-	V_{DD}+0.5	
$V_{hys(NRST)}$	NRST Schmitt trigger voltage hysteresis	-	-	200	-	mV
R_{PU}	Weak pull-up equivalent resistor(2)	$V_{IN} = V_{SS}$	30	40	50	kΩ
$V_{F(NRST)}$(1)	NRST Input filtered pulse	-	-	-	100	ns
$V_{NF(NRST)}$(1)	NRST Input not filtered pulse	-	300	-	-	ns

1. Guaranteed by design.
2. The pull-up is designed with a true resistance in series with a switchable PMOS. This PMOS contribution to the series resistance must be minimum (~10% order).

Figure 47. Recommended NRST pin protection

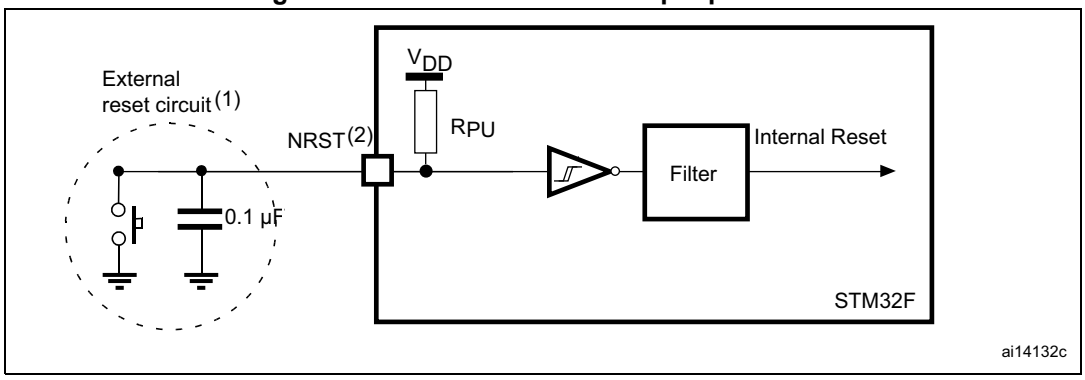

1. The reset network protects the device against parasitic resets.
2. The user must ensure that the level on the NRST pin can go below the $V_{IL(NRST)}$ max level specified in *Table 49*. Otherwise the reset will not be taken into account by the device.

5.3.16 TIM timer characteristics

The parameters given in *Table 50* are guaranteed by design.

Refer to *Section 5.3.14: I/O port characteristics* for details on the input/output alternate function characteristics (output compare, input capture, external clock, PWM output).

Table 50. TIMx(1) characteristics

Symbol	Parameter	Conditions	Min	Max	Unit
$t_{res(TIM)}$	Timer resolution time	-	1	-	$t_{TIMxCLK}$
		$f_{TIMxCLK}$ = 72 MHz	13.9	-	ns
f_{EXT}	Timer external clock frequency on CH1 to CH4	-	0	$f_{TIMxCLK}/2$	MHz
		$f_{TIMxCLK}$ = 72 MHz	0	36	MHz
Res_{TIM}	Timer resolution	-	-	16	bit
$t_{COUNTER}$	16-bit counter clock period when internal clock is selected	-	1	65536	$t_{TIMxCLK}$
		$f_{TIMxCLK}$ = 72 MHz	0.0139	910	µs
t_{MAX_COUNT}	Maximum possible count	-	-	65536 × 65536	$t_{TIMxCLK}$
		$f_{TIMxCLK}$ = 72 MHz	-	59.6	s

1. TIMx is used as a general term to refer to the TIM1, TIM2, TIM3 and TIM4 timers.

5.3.17 Communications interfaces

I²C interface characteristics

The STM32F103xC, STM32F103xD and STM32F103xESTM32F103xF and STM32F103xG performance line I²C interface meets the requirements of the standard I²C communication protocol with the following restrictions: the I/O pins SDA and SCL are mapped to are not “true” open-drain. When configured as open-drain, the PMOS connected between the I/O pin and V_{DD} is disabled, but is still present.

The I²C characteristics are described in *Table 51*. Refer also to *Section 5.3.14: I/O port characteristics* for more details on the input/output alternate function characteristics (SDA and SCL).

Table 51. I²C characteristics

Symbol	Parameter	Standard mode I²C(1)(2)		Fast mode I²C(1)(2)		Unit
		Min	Max	Min	Max	
$t_{w(SCLL)}$	SCL clock low time	4.7	-	1.3	-	µs
$t_{w(SCLH)}$	SCL clock high time	4.0	-	0.6	-	
$t_{su(SDA)}$	SDA setup time	250	-	100	-	ns
$t_{h(SDA)}$	SDA data hold time	-	3450(3)	-	900(3)	
$t_{r(SDA)}$ $t_{r(SCL)}$	SDA and SCL rise time	-	1000	-	300	
$t_{f(SDA)}$ $t_{f(SCL)}$	SDA and SCL fall time	-	300	-	300	
$t_{h(STA)}$	Start condition hold time	4.0	-	0.6	-	µs
$t_{su(STA)}$	Repeated Start condition setup time	4.7	-	0.6	-	
$t_{su(STO)}$	Stop condition setup time	4.0	-	0.6	-	µs
$t_{w(STO:STA)}$	Stop to Start condition time (bus free)	4.7	-	1.3	-	µs
C_b	Capacitive load for each bus line	-	400	-	400	pF
t_{SP}	Pulse width of the spikes that are suppressed by the analog filter for standard and fast mode	0	50(4)	0	50(4)	µs

1. Guaranteed by design.
2. f_{PCLK1} must be at least 2 MHz to achieve standard mode I²C frequencies. It must be at least 4 MHz to achieve the fast mode I²C frequencies and it must be a multiple of 10 MHz in order to reach the I2C fast mode maximum clock speed of 400 kHz.
3. The device must internally provide a hold time of at least 300ns for the SDA signal in order to bridge the undefined region on the falling edge of SCL.
4. The minimum width of the spikes filtered by the analog filter is above t_{SP}(max).

Figure 48. I²C bus AC waveforms and measurement circuit

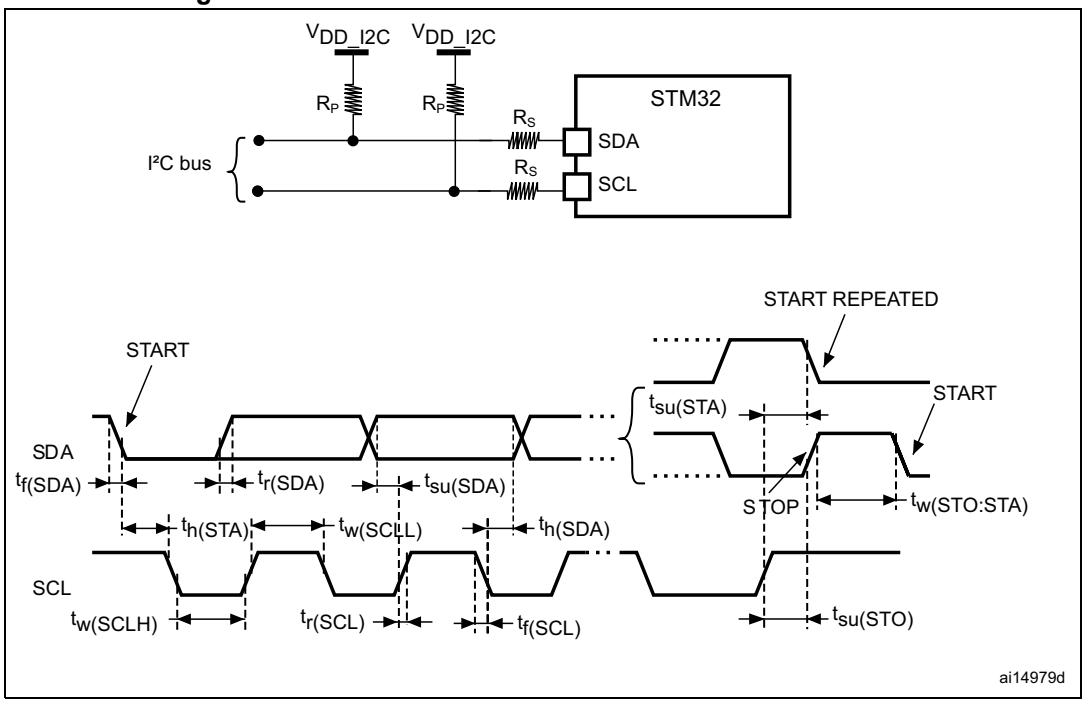

1. Measurement points are done at CMOS levels: $0.3V_{DD}$ and $0.7V_{DD}$.
2. Rs: Series protection resistors.
3. Rp: Pull-up resistors.
4. VDD_I2C : I2C bus supply

Table 52. SCL frequency (f_{PCLK1}= 36 MHz.,V_{DD_I2C} = 3.3 V)(1)(2)

f_{SCL} (kHz)	I2C_CCR value
	R_P = 4.7 kΩ
400	0x801E
300	0x8028
200	0x803C
100	0x00B4
50	0x0168
20	0x0384

1. R_P = External pull-up resistance, f_{SCL} = I²C speed.
2. For speeds around 200 kHz, the tolerance on the achieved speed is of ±5%. For other speed ranges, the tolerance on the achieved speed ±2%. These variations depend on the accuracy of the external components used to design the application.

I^2S - SPI characteristics

Unless otherwise specified, the parameters given in *Table 53* for SPI or in *Table 54* for I^2S are derived from tests performed under ambient temperature, f_{PCLKx} frequency and V_{DD} supply voltage conditions summarized in *Table 10*.

Refer to *Section 5.3.14: I/O port characteristics* for more details on the input/output alternate function characteristics (NSS, SCK, MOSI, MISO for SPI and WS, CK, SD for I^2S).

Table 53. SPI characteristics

Symbol	Parameter	Conditions	Min	Max	Unit
f_{SCK} $1/t_{c(SCK)}$	SPI clock frequency	Master mode	-	18	MHz
		Slave mode	-	18	
$t_{r(SCK)}$ $t_{f(SCK)}$	SPI clock rise and fall time	Capacitive load: C = 30 pF	-	8	ns
DuCy(SCK)	SPI slave input clock duty cycle	Slave mode	30	70	%
$t_{su(NSS)}$(1)	NSS setup time	Slave mode	$4t_{PCLK}$	-	ns
$t_{h(NSS)}$(1)	NSS hold time	Slave mode	$2t_{PCLK}$	-	
$t_{w(SCKH)}$(1) $t_{w(SCKL)}$(1)	SCK high and low time	Master mode, f_{PCLK} = 36 MHz, presc = 4	50	60	
$t_{su(MI)}$(1) $t_{su(SI)}$(1)	Data input setup time	Master mode	5	-	
		Slave mode	5	-	
$t_{h(MI)}$(1)	Data input hold time	Master mode	5	-	
$t_{h(SI)}$(1)		Slave mode	4	-	
$t_{a(SO)}$(1)(2)	Data output access time	Slave mode, f_{PCLK} = 20 MHz	0	$3t_{PCLK}$	
$t_{dis(SO)}$(1)(3)	Data output disable time	Slave mode	2	10	
$t_{v(SO)}$(1)	Data output valid time	Slave mode (after enable edge)	-	25	
$t_{v(MO)}$(1)	Data output valid time	Master mode (after enable edge)	-	5	
$t_{h(SO)}$(1)	Data output hold time	Slave mode (after enable edge)	15	-	
$t_{h(MO)}$(1)		Master mode (after enable edge)	2	-	

1. Guaranteed by characterization results.
2. Min time is for the minimum time to drive the output and the max time is for the maximum time to validate the data.
3. Min time is for the minimum time to invalidate the output and the max time is for the maximum time to put the data in Hi-Z

Figure 49. SPI timing diagram - slave mode and CPHA = 0

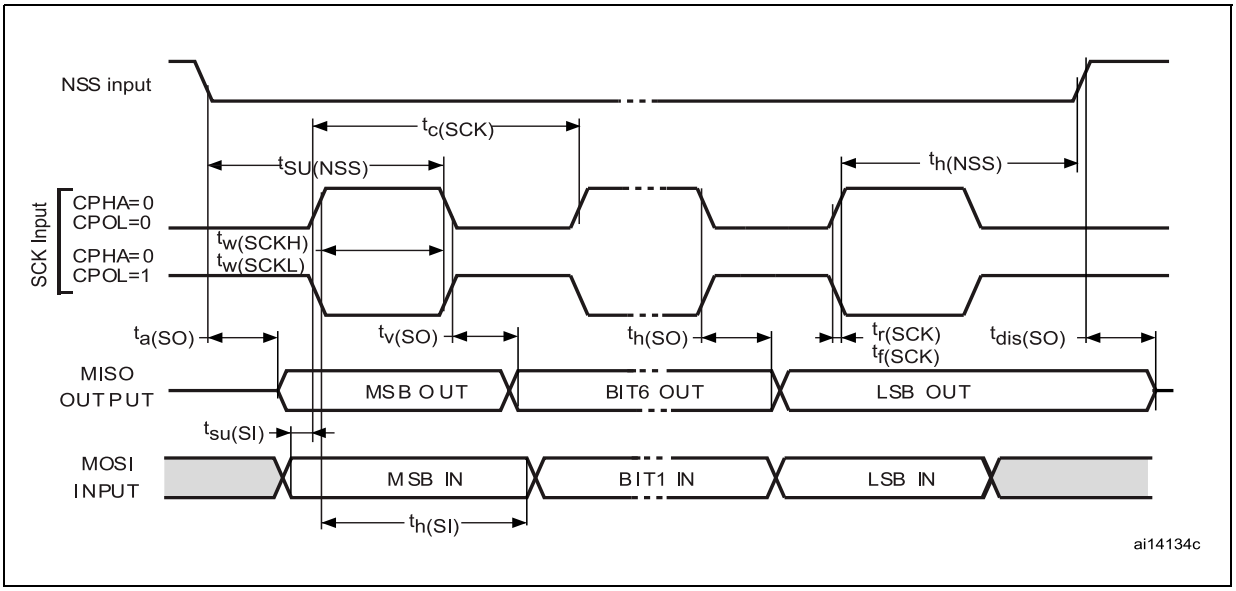

Figure 50. SPI timing diagram - slave mode and CPHA = 1(1)

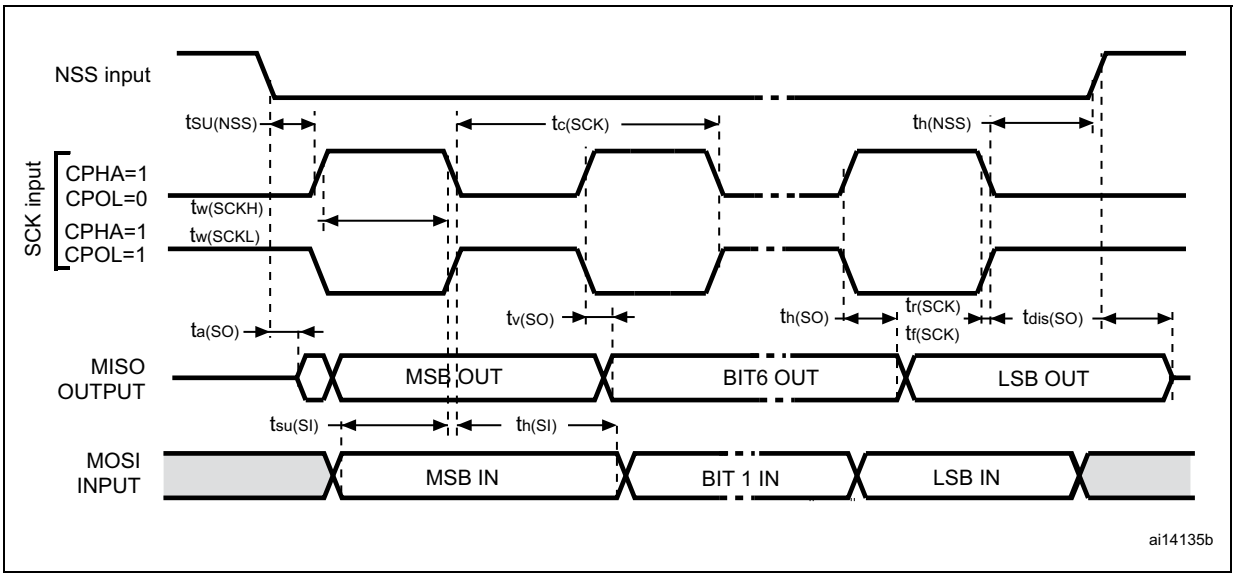

1. Measurement points are done at CMOS levels: $0.3V_{DD}$ and $0.7V_{DD}$.

Figure 51. SPI timing diagram - master mode(1)

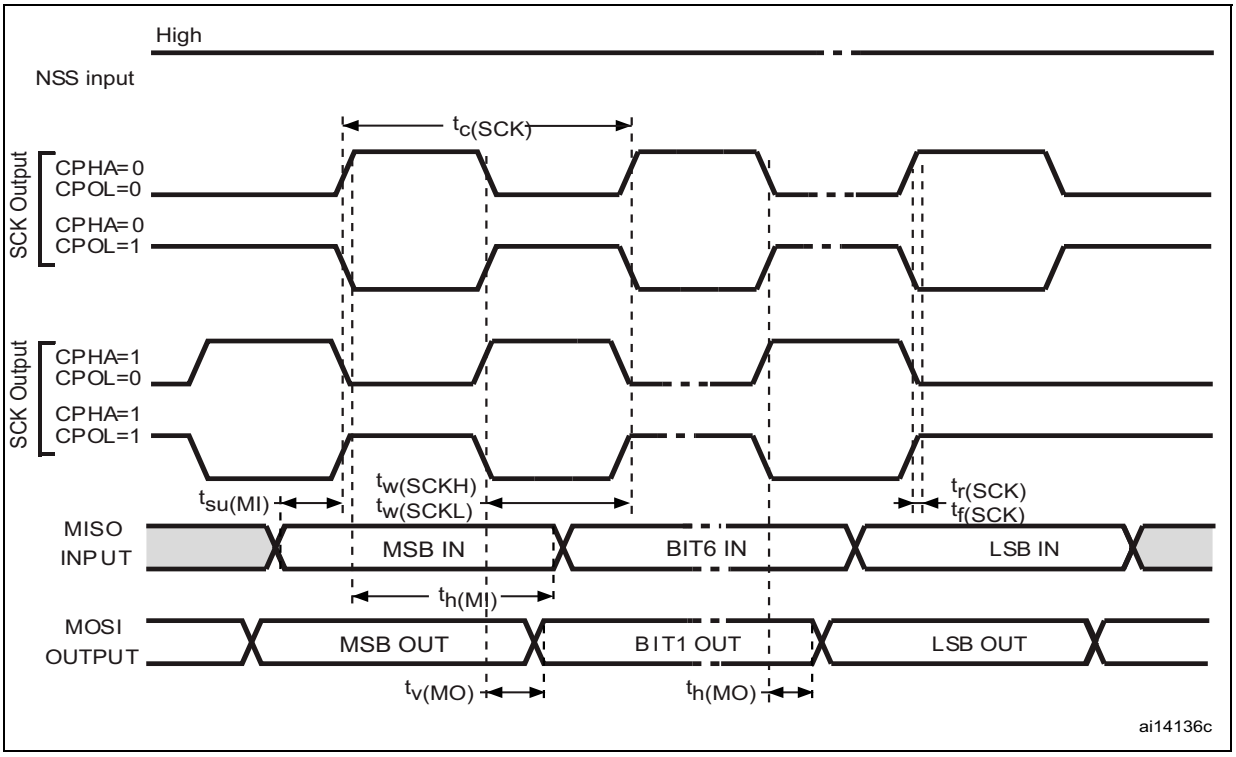

1. Measurement points are done at CMOS levels: $0.3V_{DD}$ and $0.7V_{DD}$.

Table 54. I^2S characteristics

Symbol	Parameter	Conditions		Min	Max	Unit
DuCy(SCK)	I2S slave input clock duty cycle	Slave mode		30	70	%
f_{CK} $1/t_{c(CK)}$	I^2S clock frequency	Master mode (data: 16 bits, Audio frequency = 48 kHz)		1.522	1.525	MHz
		Slave mode		0	6.5	
$t_{r(CK)}$ $t_{f(CK)}$	I^2S clock rise and fall time	Capacitive load C_L = 50 pF		-	8	ns
$t_{v(WS)}$ (1)	WS valid time	Master mode		3	-	
$t_{h(WS)}$ (1)	WS hold time	Master mode	I2S2	2	-	
			I2S3	0	-	
$t_{su(WS)}$ (1)	WS setup time	Slave mode		4	-	
$t_{h(WS)}$ (1)	WS hold time	Slave mode		0	-	
$t_{w(CKH)}$ (1)	CK high and low time	Master f_{PCLK}= 16 MHz, audio frequency = 48 kHz		312.5	-	
$t_{w(CKL)}$ (1)				345	-	
$t_{su(SD_MR)}$ (1)	Data input setup time	Master receiver	I2S2	2	-	
			I2S3	6.5	-	
$t_{su(SD_SR)}$ (1)	Data input setup time	Slave receiver		1.5	-	
$t_{h(SD_MR)}$ (1)(2)	Data input hold time	Master receiver		0	-	
$t_{h(SD_SR)}$ (1)(2)		Slave receiver		0.5	-	
$t_{v(SD_ST)}$ (1)(2)	Data output valid time	Slave transmitter (after enable edge)		-	18	
$t_{h(SD_ST)}$ (1)	Data output hold time	Slave transmitter (after enable edge)		11	-	
$t_{v(SD_MT)}$ (1)(2)	Data output valid time	Master transmitter (after enable edge)		-	3	
$t_{h(SD_MT)}$ (1)	Data output hold time	Master transmitter (after enable edge)		0	-	

1. Guaranteed by design and/or characterization results.
2. Depends on f_{PCLK}. For example, if f_{PCLK}=8 MHz, then T_{PCLK} = $1/f_{PLCLK}$ =125 ns.

Figure 52. I²S slave timing diagram (Philips protocol)(1)

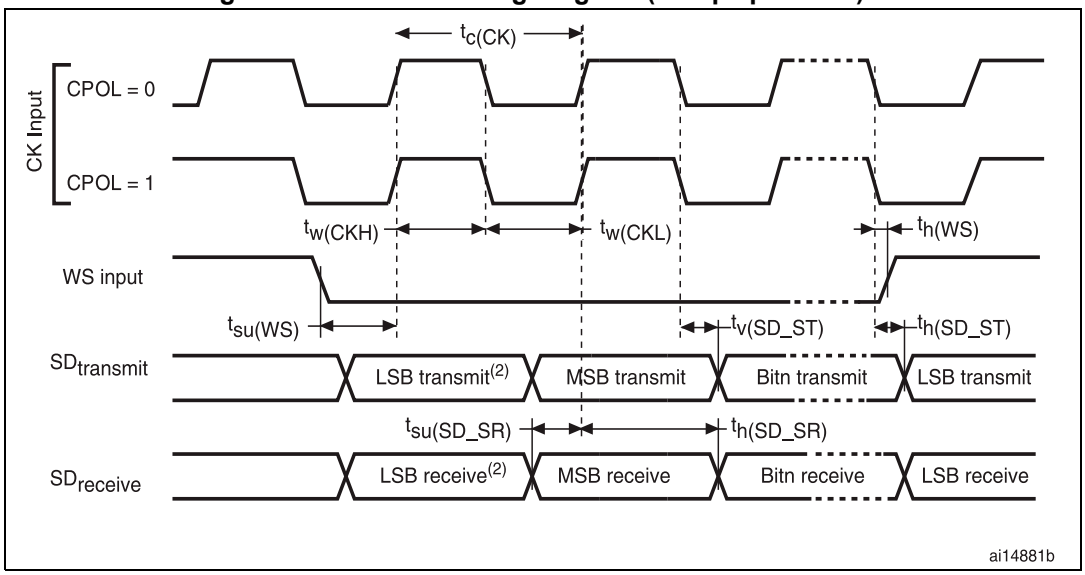

1. Measurement points are done at CMOS levels: $0.3 \times V_{DD}$ and $0.7 \times V_{DD}$.
2. LSB transmit/receive of the previously transmitted byte. No LSB transmit/receive is sent before the first byte.

Figure 53. I²S master timing diagram (Philips protocol)(1)

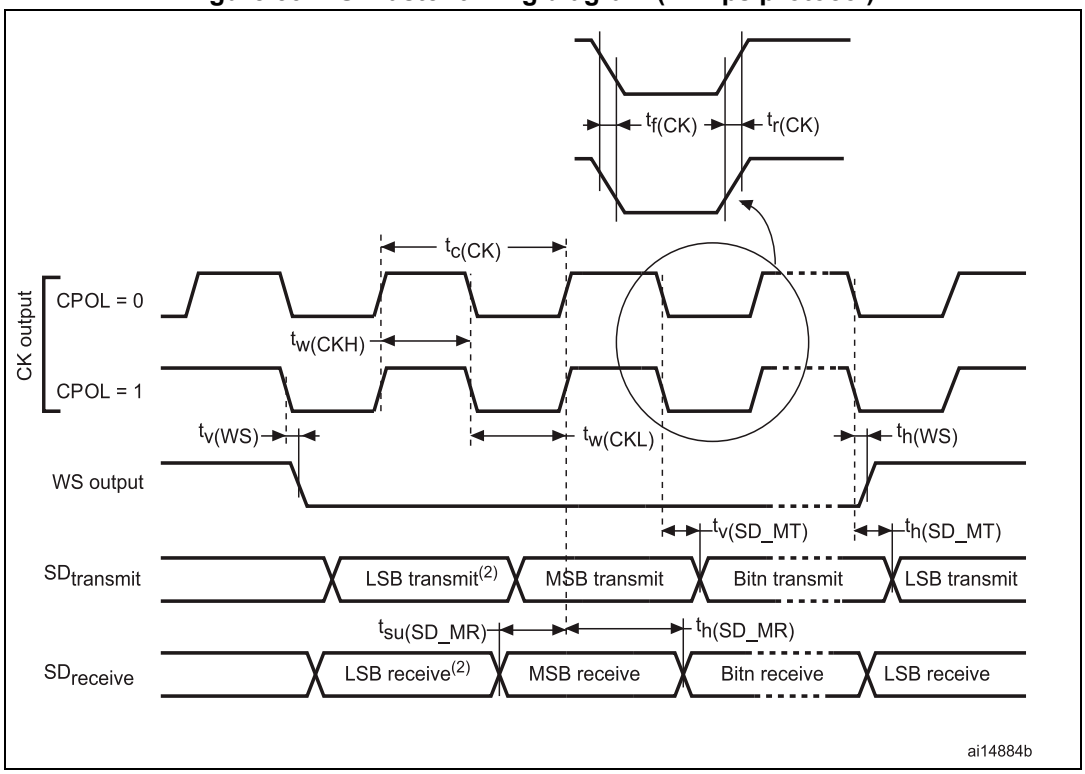

1. Guaranteed by characterization results.
2. LSB transmit/receive of the previously transmitted byte. No LSB transmit/receive is sent before the first byte.

SD/SDIO MMC card host interface (SDIO) characteristics

Unless otherwise specified, the parameters given in *Table 55* are derived from tests performed under ambient temperature, f_{PCLKx} frequency and V_{DD} supply voltage conditions summarized in *Table 10*.

Refer to *Section 5.3.14: I/O port characteristics* for more details on the input/output alternate function characteristics (D[7:0], CMD, CK).

Figure 54. SDIO high-speed mode

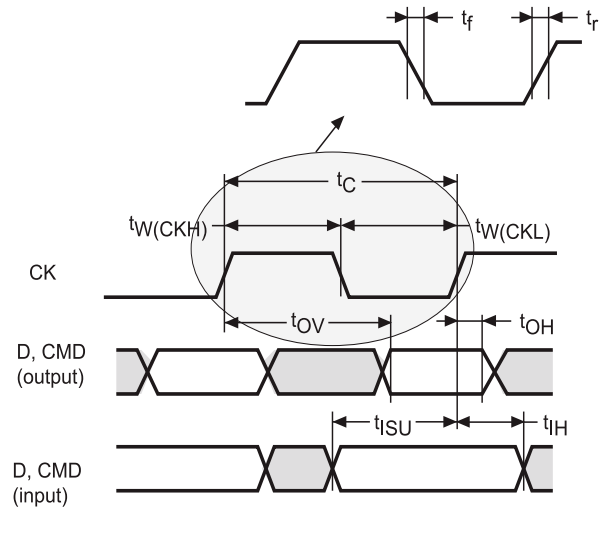

Figure 55. SD default mode

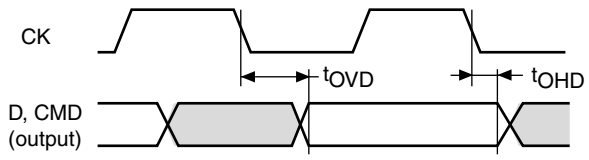

Table 55. SD / MMC characteristics

Symbol	Parameter	Conditions	Min	Max	Unit
f_{PP}	Clock frequency in data transfer mode	$C_L \leq 30$ pF	0	48	MHz
tW(CKL)	Clock low time, f_{PP} = 16 MHz	$C_L \leq 30$ pF	32	-	ns
tW(CKH)	Clock high time, f_{PP} = 16 MHz	$C_L \leq 30$ pF	30	-	
t_r	Clock rise time	$C_L \leq 30$ pF	-	4	
t_f	Clock fall time	$C_L \leq 30$ pF	-	5	

Table 55. SD / MMC characteristics

Symbol	Parameter	Conditions	Min	Max	Unit
CMD, D inputs (referenced to CK)					
t_{ISU}	Input setup time	$C_L \leq 30$ pF	2	-	ns
t_{IH}	Input hold time	$C_L \leq 30$ pF	0	-	
CMD, D outputs (referenced to CK) in MMC and SD HS mode					
t_{OV}	Output valid time	$C_L \leq 30$ pF	-	6	ns
t_{OH}	Output hold time	$C_L \leq 30$ pF	0	-	
CMD, D outputs (referenced to CK) in SD default mode(1)					
t_{OVD}	Output valid default time	$C_L \leq 30$ pF	-	7	ns
t_{OHD}	Output hold default time	$C_L \leq 30$ pF	0.5	-	

1. Refer to SDIO_CLKCR, the SDI clock control register to control the CK output.

USB characteristics

The USB interface is USB-IF certified (Full Speed).

Table 56. USB startup time

Symbol	Parameter	Max	Unit
$t_{STARTUP}$(1)	USB transceiver startup time	1	µs

1. Guaranteed by design.

Table 57. USB DC electrical characteristics

Symbol	Parameter	Conditions	Min.(1)	Max.(1)	Unit
Input levels					
V_{DD}	USB operating voltage(2)	-	3.0(3)	3.6	V
V_{DI}(4)	Differential input sensitivity	I(USB_DP, USB_DM)	0.2	-	V
V_{CM}(4)	Differential common mode range	Includes V_{DI} range	0.8	2.5	
V_{SE}(4)	Single ended receiver threshold	-	1.3	2.0	
Output levels					
V_{OL}	Static output level low	R_L of 1.5 kΩ to 3.6 V(5)	-	0.3	V
V_{OH}	Static output level high	R_L of 15 kΩ to V_{SS}(5)	2.8	3.6	

1. All the voltages are measured from the local ground potential.
2. To be compliant with the USB 2.0 full-speed electrical specification, the USB_DP (D+) pin should be pulled up with a 1.5 kΩ resistor to a 3.0-to-3.6 V voltage range.
3. The STM32F103xC/D/E USB functionality is ensured down to 2.7 V but not the full USB electrical characteristics which are degraded in the 2.7-to-3.0 V V_{DD} voltage range.
4. Guaranteed by characterization results.
5. R_L is the load connected on the USB drivers

Figure 56. USB timings: definition of data signal rise and fall time

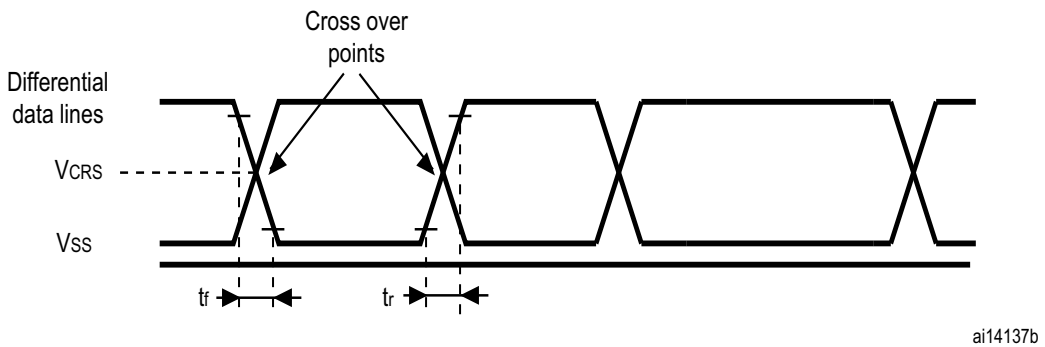

Table 58. USB: full-speed electrical characteristics

Driver characteristics(1)					
Symbol	**Parameter**	**Conditions**	**Min**	**Max**	**Unit**
t_r	Rise time(2)	C_L = 50 pF	4	20	ns
t_f	Fall Time(2)	C_L = 50 pF	4	20	ns
t_{rfm}	Rise/ fall time matching	t_r/t_f	90	110	%
V_{CRS}	Output signal crossover voltage	-	1.3	2.0	V

1. Guaranteed by design.
2. Measured from 10% to 90% of the data signal. For more detailed informations, please refer to USB Specification - Chapter 7 (version 2.0).

5.3.18 CAN (controller area network) interface

Refer to *Section 5.3.14: I/O port characteristics* for more details on the input/output alternate function characteristics (CAN_TX and CAN_RX).

5.3.19 12-bit ADC characteristics

Unless otherwise specified, the parameters given in *Table 59* are preliminary values derived from tests performed under ambient temperature, f_{PCLK2} frequency and V_{DDA} supply voltage conditions summarized in *Table 10*.

Note: It is recommended to perform a calibration after each power-up.

Table 59. ADC characteristics

Symbol	Parameter	Conditions	Min	Typ	Max	Unit
V_{DDA}	Power supply	-	2.4	-	3.6	V
V_{REF+}	Positive reference voltage	-	2.4	-	V_{DDA}	V
V_{REF-}	Negative reference voltage	-	0			V
I_{VREF}	Current on the V_{REF} input pin	-	-	160(1)	220	µA
f_{ADC}	ADC clock frequency	-	0.6	-	14	MHz
f_S(2)	Sampling rate	-	0.05	-	1	MHz
f_{TRIG}(2)	External trigger frequency	f_{ADC} = 14 MHz	-	-	823	kHz
		-	-	-	17	$1/f_{ADC}$
V_{AIN}	Conversion voltage range(3)	-	0 (V_{SSA} or V_{REF-} tied to ground)	-	V_{REF+}	V
R_{AIN}(2)	External input impedance	See *Equation 1* and *Table 60* for details	-	-	50	kΩ
R_{ADC}(2)	Sampling switch resistance	-	-	-	1	kΩ
C_{ADC}(2)	Internal sample and hold capacitor	-	-	-	8	pF
t_{CAL}(2)	Calibration time	f_{ADC} = 14 MHz	5.9			µs
		-	83			$1/f_{ADC}$
t_{lat}(2)	Injection trigger conversion latency	f_{ADC} = 14 MHz	-	-	0.214	µs
		-	-	-	3(4)	$1/f_{ADC}$
t_{latr}(2)	Regular trigger conversion latency	f_{ADC} = 14 MHz	-	-	0.143	µs
		-	-	-	2(4)	$1/f_{ADC}$
t_S(2)	Sampling time	f_{ADC} = 14 MHz	0.107	-	17.1	µs
		-	1.5	-	239.5	$1/f_{ADC}$
t_{STAB}(2)	Power-up time	-	0	0	1	µs
t_{CONV}(2)	Total conversion time (including sampling time)	f_{ADC} = 14 MHz	1	-	18	µs
		-	14 to 252 (t_S for sampling +12.5 for successive approximation)			$1/f_{ADC}$

1. Guaranteed by characterization results.
2. Guaranteed by design.
3. V_{REF+} can be internally connected to V_{DDA} and V_{REF-} can be internally connected to V_{SSA}, depending on the package. Refer to *Section 3: Pinouts and pin descriptions* for further details.
4. For external triggers, a delay of $1/f_{PCLK2}$ must be added to the latency specified in *Table 59*.

Equation 1: R_{AIN} max formula

$$R_{AIN} < \frac{T_S}{f_{ADC} \times C_{ADC} \times \ln(2^{N+2})} - R_{ADC}$$

The formula above (*Equation 1*) is used to determine the maximum external impedance allowed for an error below 1/4 of LSB. Here N = 12 (from 12-bit resolution).

Table 60. R_{AIN} max for f_{ADC} = 14 MHz(1)

T_s (cycles)	t_S (µs)	R_{AIN} max (kΩ)
1.5	0.11	0.4
7.5	0.54	5.9
13.5	0.96	11.4
28.5	2.04	25.2
41.5	2.96	37.2
55.5	3.96	50
71.5	5.11	NA
239.5	17.1	NA

1. Guaranteed by design.

Table 61. ADC accuracy - limited test conditions(1)(2)

Symbol	Parameter	Test conditions	Typ	Max(3)	Unit
ET	Total unadjusted error	f_{PCLK2} = 56 MHz, f_{ADC} = 14 MHz, R_{AIN} < 10 kΩ, V_{DDA} = 3 V to 3.6 V T_A = 25 °C Measurements made after ADC calibration $V_{REF+} = V_{DDA}$	±1.3	±2	LSB
EO	Offset error		±1	±1.5	
EG	Gain error		±0.5	±1.5	
ED	Differential linearity error		±0.7	±1	
EL	Integral linearity error		±0.8	±1.5	

1. ADC DC accuracy values are measured after internal calibration.
2. ADC Accuracy vs. Negative Injection Current: Injecting negative current on any analog input pins should be avoided as this significantly reduces the accuracy of the conversion being performed on another analog input. It is recommended to add a Schottky diode (pin to ground) to analog pins which may potentially inject negative current.
Any positive injection current within the limits specified for $I_{INJ(PIN)}$ and $\Sigma I_{INJ(PIN)}$ in *Section 5.3.14* does not affect the ADC accuracy.
3. Guaranteed by characterization results.

Table 62. ADC accuracy(1) (2)(3)

Symbol	Parameter	Test conditions	Typ	Max(4)	Unit
ET	Total unadjusted error	f_{PCLK2} = 56 MHz, f_{ADC} = 14 MHz, R_{AIN} < 10 kΩ, V_{DDA} = 2.4 V to 3.6 V Measurements made after ADC calibration	±2	±5	LSB
EO	Offset error		±1.5	±2.5	
EG	Gain error		±1.5	±3	
ED	Differential linearity error		±1	±2	
EL	Integral linearity error		±1.5	±3	

1. ADC DC accuracy values are measured after internal calibration.
2. Better performance could be achieved in restricted V_{DD}, frequency, V_{REF} and temperature ranges.
3. ADC Accuracy vs. Negative Injection Current: Injecting negative current on any analog input pins should be avoided as this significantly reduces the accuracy of the conversion being performed on another analog input. It is recommended to add a Schottky diode (pin to ground) to analog pins which may potentially inject negative current.
Any positive injection current within the limits specified for $I_{INJ(PIN)}$ and $\Sigma I_{INJ(PIN)}$ in *Section 5.3.14* does not affect the ADC accuracy.
4. Guaranteed by characterization results.

Figure 57. ADC accuracy characteristics

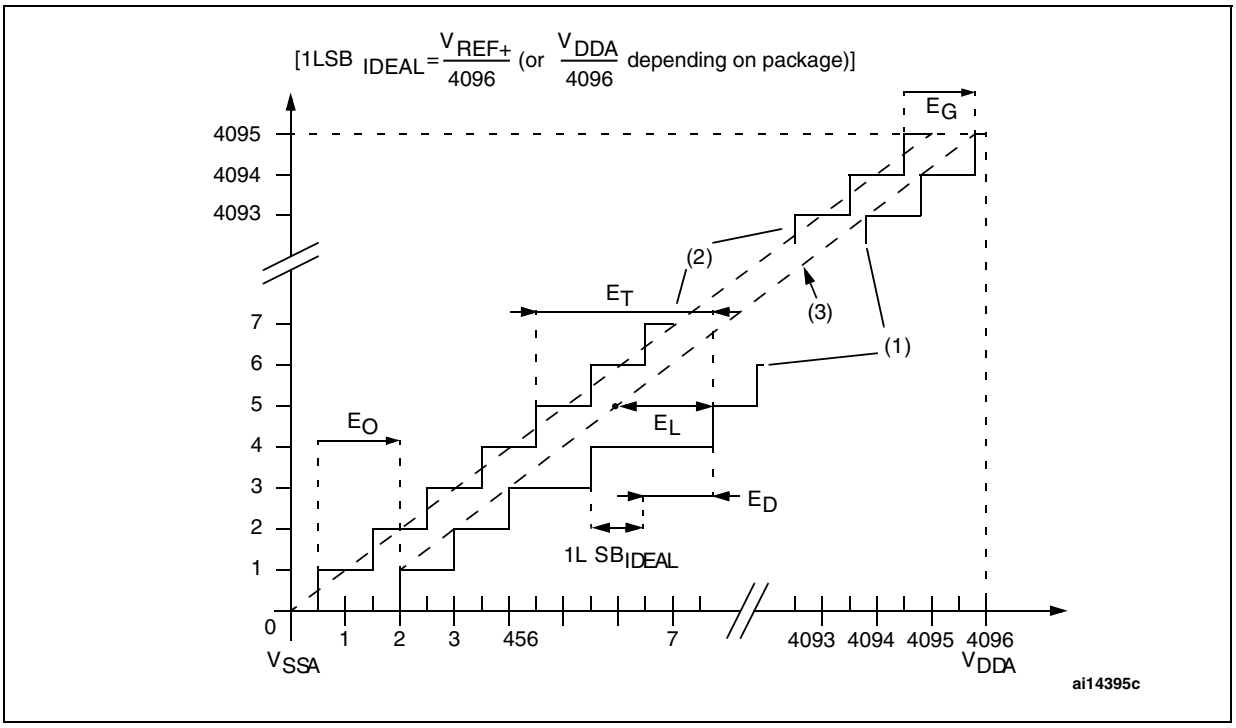

1. Example of an actual transfer curve.
2. Ideal transfer curve.
3. End point correlation line.
4. E_T = Total Unadjusted Error: maximum deviation between the actual and the ideal transfer curves.
EO = Offset Error: deviation between the first actual transition and the first ideal one.
EG = Gain Error: deviation between the last ideal transition and the last actual one.
ED = Differential Linearity Error: maximum deviation between actual steps and the ideal one.
EL = Integral Linearity Error: maximum deviation between any actual transition and the end point correlation line.

Figure 58. Typical connection diagram using the ADC

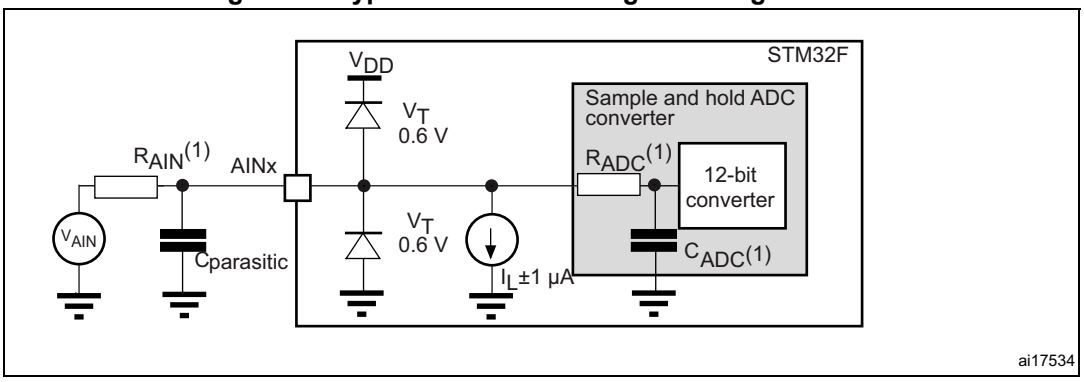

1. Refer to *Table 59* for the values of R_{AIN}, R_{ADC} and C_{ADC}.
2. $C_{parasitic}$ represents the capacitance of the PCB (dependent on soldering and PCB layout quality) plus the pad capacitance (roughly 7 pF). A high $C_{parasitic}$ value will downgrade conversion accuracy. To remedy this, f_{ADC} should be reduced.

General PCB design guidelines

Power supply decoupling should be performed as shown in *Figure 59* or *Figure 60*, depending on whether V_{REF+} is connected to V_{DDA} or not. The 10 nF capacitors should be ceramic (good quality). They should be placed them as close as possible to the chip.

Figure 59. Power supply and reference decoupling (V_{REF+} not connected to V_{DDA})

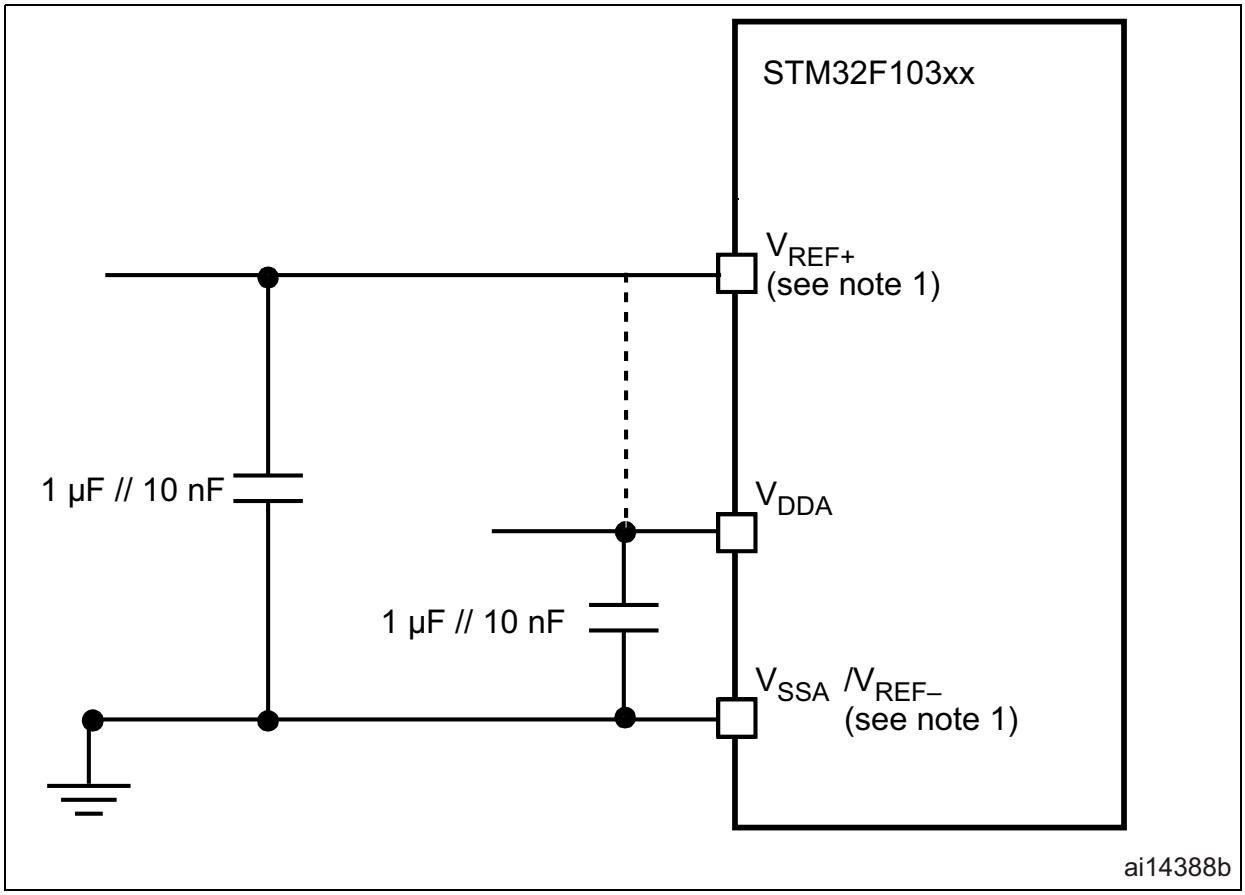

1. V_{REF+} and V_{REF-} inputs are available only on 100-pin packages.

Figure 60. Power supply and reference decoupling (V_{REF+} connected to V_{DDA})

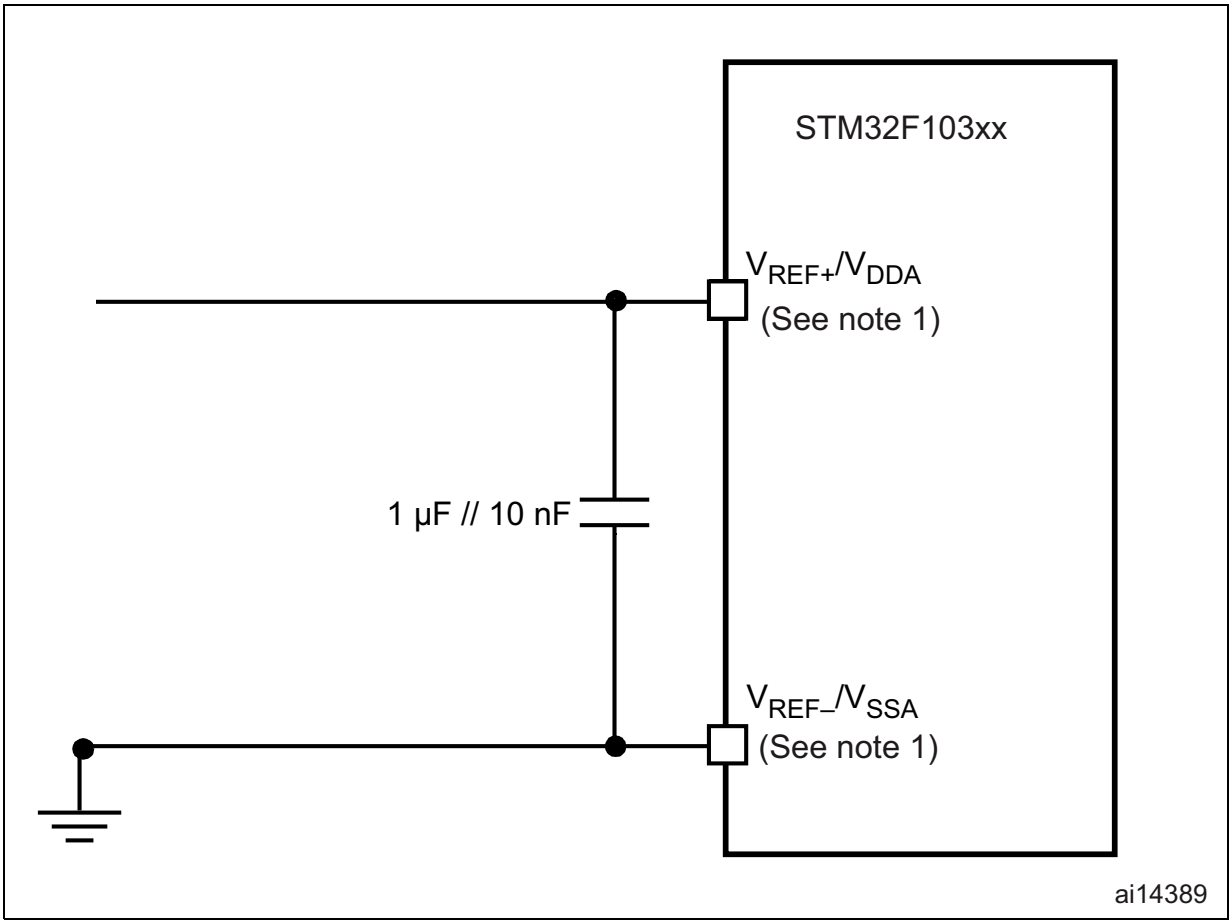

1. V_{REF+} and V_{REF-} inputs are available only on 100-pin packages.

5.3.20 DAC electrical specifications

Table 63. DAC characteristics

Symbol	Parameter	Min	Typ	Max	Unit	Comments
V_{DDA}	Analog supply voltage	2.4	-	3.6	V	-
V_{REF+}	Reference supply voltage	2.4	-	3.6	V	V_{REF+} must always be below V_{DDA}
V_{SSA}	Ground	0	-	0	V	-
R_{LOAD}(1)	Resistive load with buffer ON	5	-	-	kΩ	-
R_O(2)	Impedance output with buffer OFF	-	-	15	kΩ	When the buffer is OFF, the Minimum resistive load between DAC_OUT and V_{SS} to have a 1% accuracy is 1.5 MΩ
C_{LOAD}(1)	Capacitive load	-	-	50	pF	Maximum capacitive load at DAC_OUT pin (when the buffer is ON).
DAC_OUT min(1)	Lower DAC_OUT voltage with buffer ON	0.2	-	-	V	It gives the maximum output excursion of the DAC. It corresponds to 12-bit input code (0x0E0) to (0xF1C) at V_{REF+} = 3.6 V and (0x155) and (0xEAB) at V_{REF+} = 2.4 V
DAC_OUT max(1)	Higher DAC_OUT voltage with buffer ON	-	-	V_{DDA} – 0.2	V	
DAC_OUT min(1)	Lower DAC_OUT voltage with buffer OFF	-	0.5	-	mV	It gives the maximum output excursion of the DAC.
DAC_OUT max(1)	Higher DAC_OUT voltage with buffer OFF	-	-	V_{REF+} – 1LSB	V	
$I_{DDVREF+}$	DAC DC current consumption in quiescent mode (Standby mode)	-	-	220	µA	With no load, worst code (0xF1C) at V_{REF+} = 3.6 V in terms of DC consumption on the inputs
I_{DDA}	DAC DC current consumption in quiescent mode(3)	-	-	380	µA	With no load, middle code (0x800) on the inputs
		-	-	480	µA	With no load, worst code (0xF1C) at V_{REF+} = 3.6 V in terms of DC consumption on the inputs
DNL(4)	Differential non linearity Difference between two consecutive code-1LSB)	-	-	±0.5	LSB	Given for the DAC in 10-bit configuration
		-	-	±2	LSB	Given for the DAC in 12-bit configuration
INL(3)	Integral non linearity (difference between measured value at Code i and the value at Code i on a line drawn between Code 0 and last Code 1023)	-	-	±1	LSB	Given for the DAC in 10-bit configuration
		-	-	±4	LSB	Given for the DAC in 12-bit configuration

Table 63. DAC characteristics (continued)

Symbol	Parameter	Min	Typ	Max	Unit	Comments
Offset(3)	Offset error (difference between measured value at Code (0x800) and the ideal value = $V_{REF+}/2$)	-	-	±10	mV	-
		-	-	±3	LSB	Given for the DAC in 10-bit at V_{REF+} = 3.6 V
		-	-	±12	LSB	Given for the DAC in 12-bit at V_{REF+} = 3.6 V
Gain error(3)	Gain error	-	-	±0.5	%	Given for the DAC in 12bit configuration
$t_{SETTLING}$(3)	Settling time (full scale: for a 10-bit input code transition between the lowest and the highest input codes when DAC_OUT reaches final value ±1LSB	-	3	4	µs	$C_{LOAD} \leq 50$ pF, $R_{LOAD} \geq 5$ kΩ
Update rate(3)	Max frequency for a correct DAC_OUT change when small variation in the input code (from code i to i+1LSB)	-	-	1	MS/s	$C_{LOAD} \leq 50$ pF, $R_{LOAD} \geq 5$ kΩ
t_{WAKEUP}(3)	Wakeup time from off state (Setting the ENx bit in the DAC Control register)	-	6.5	10	µs	$C_{LOAD} \leq 50$ pF, $R_{LOAD} \geq 5$ kΩ input code between lowest and highest possible ones.
PSRR+ (1)	Power supply rejection ratio (to V_{DDA}) (static DC measurement	-	–67	–40	dB	No R_{LOAD}, C_{LOAD} = 50 pF

1. Guaranteed by design.
2. Guaranteed by characterization.
3. The quiescent mode corresponds to a state where the DAC maintains a stable output level to ensure that no dynamic consumption occurs.
4. Guaranteed by characterization results.

Figure 61. 12-bit buffered /non-buffered DAC

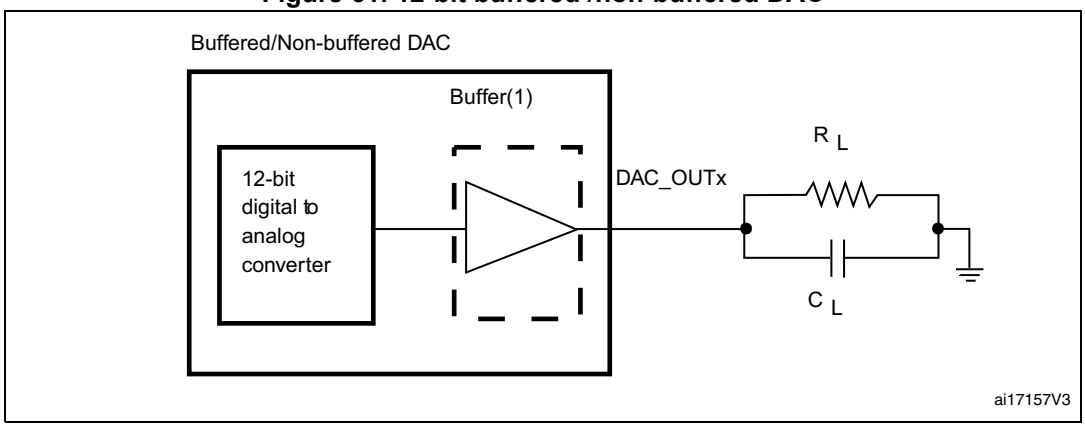

1. The DAC integrates an output buffer that can be used to reduce the output impedance and to drive external loads directly without the use of an external operational amplifier. The buffer can be bypassed by configuring the BOFFx bit in the DAC_CR register.

5.3.21 Temperature sensor characteristics

Table 64. TS characteristics

Symbol	Parameter	Min	Typ	Max	Unit
T_L	V_{SENSE} linearity with temperature	-	±1	±2	°C
Avg_Slope	Average slope	4.0	4.3	4.6	mV/°C
V_{25}	Voltage at 25 °C	1.34	1.43	1.52	V
t_{START}(1)	Startup time	4	-	10	µs
T_{S_temp}(2)(1)	ADC sampling time when reading the temperature	-	-	17.1	µs

1. Guaranteed by design.
2. Shortest sampling time can be determined in the application by multiple iterations.

6 Package information

In order to meet environmental requirements, ST offers these devices in different grades of ECOPACK® packages, depending on their level of environmental compliance. ECOPACK® specifications, grade definitions and product status are available at: *www.st.com*. ECOPACK® is an ST trademark.

6.1 LFBGA144 package information

Figure 62. LFBGA144 – 144-ball low profile fine pitch ball grid array, 10 x 10 mm, 0.8 mm pitch, package outline

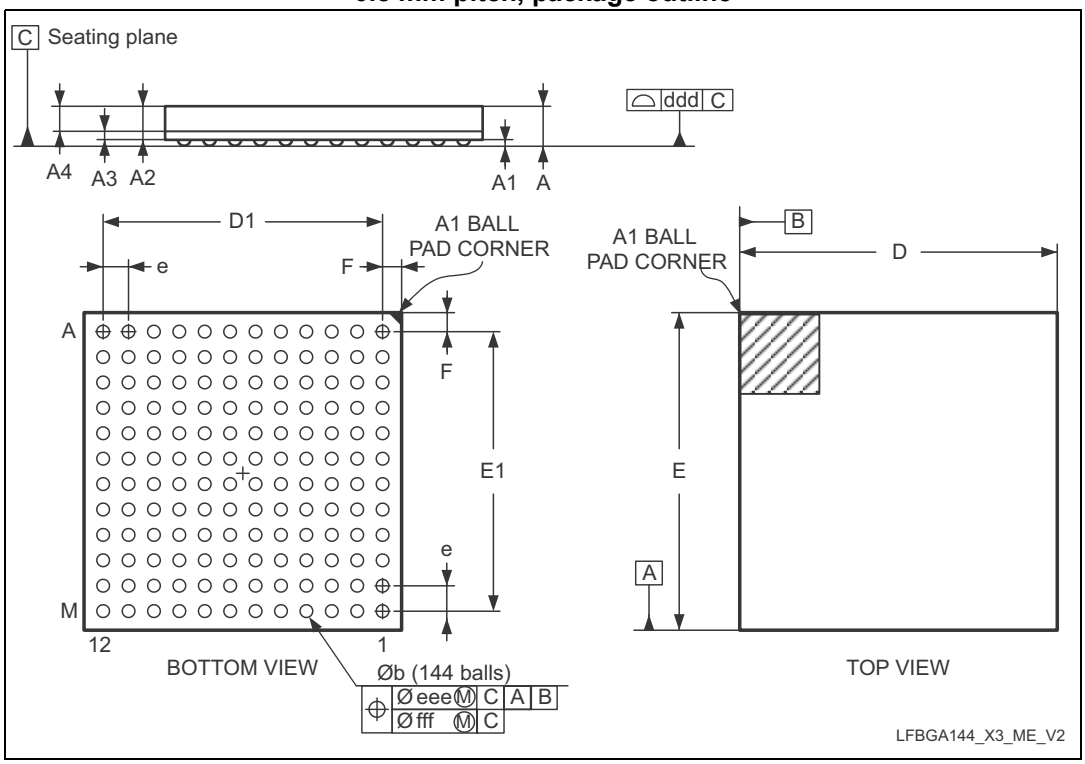

1. Drawing is not to scale.

Table 65. LFBGA144 – 144-ball low profile fine pitch ball grid array, 10 x 10 mm, 0.8 mm pitch, package mechanical data

Symbol	millimeters			inches(1)		
	Min	Typ	Max	Typ	Min	Max
A(2)	-	-	1.700	-	-	0.0669
A1	0.250	0.300	0.350	0.098	0.0118	0.0138
A2	0.810	0.910	1.010	0.0319	0.0358	0.0398
A3	0.225	0.26	0.295	0.0089	0.0102	0.0116
A4	0.585	0.650	0.715	0.0230	0.0256	0.0281

Table 65. LFBGA144 – 144-ball low profile fine pitch ball grid array, 10 x 10 mm, 0.8 mm pitch, package mechanical data (continued)

Symbol	millimeters			inches[1]		
	Min	Typ	Max	Typ	Min	Max
b	0.350	0.400	0.450	0.0138	0.0157	0.0177
D	9.900	10.000	10.100	0.3898	0.3937	0.3976
D1	-	8.800	-	-	0.3465	-
E	9.900	10.000	10.100	0.3898	0.3937	0.3976
E1	-	8.800	-	-	0.3465	-
e	-	0.800	-	-	0.0315	-
F	-	0.600	-	-	0.0236	-
ddd	-	-	0.100	-	-	0.0039
eee	-	-	0.150	-	-	0.0059
fff	-	-	0.080	-	-	0.0031

1. Values in inches are converted from mm and rounded to 4 decimal digits.
2. STATSChipPAC package dimensions.

Figure 63. LFBGA144 – 144-ball low profile fine pitch ball grid array, 10 x 10 mm, 0.8 mm pitch, package recommended footprint

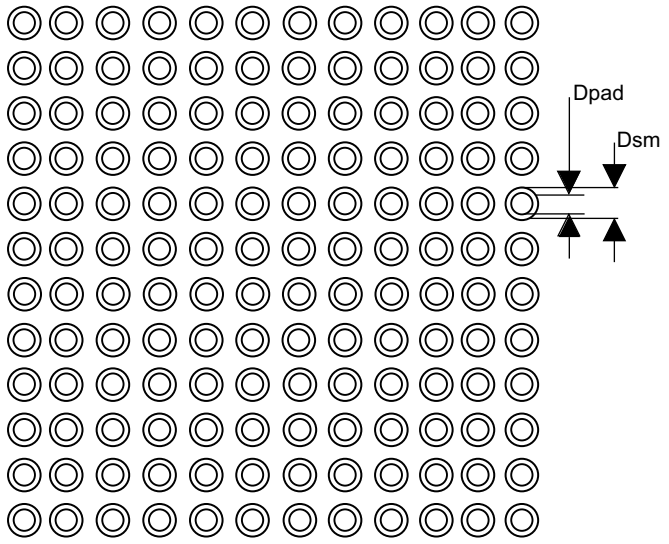

Table 66. LFBGA144 recommended PCB design rules (0.8 mm pitch BGA)

Dimension	Recommended values
Pitch	0.8 mm
Dpad	0.400 mm

Table 66. LFBGA144 recommended PCB design rules (0.8 mm pitch BGA) (continued)

Dimension	Recommended values
UBM	0.350 mm
Dsm	0.470 mm typ. (depends on the solder mask registration tolerance)
Stencil opening	0.400 mm
Stencil thickness	Between 0.100 mm to 0.125 mm
Pad trace width	0.120 mm
Ball Diameter	0.400 mm

Device marking for LFBGA144 package

The following figure gives an example of topside marking orientation versus ball A1 identifier location.

Figure 64. LFBGA144 marking example (package top view)

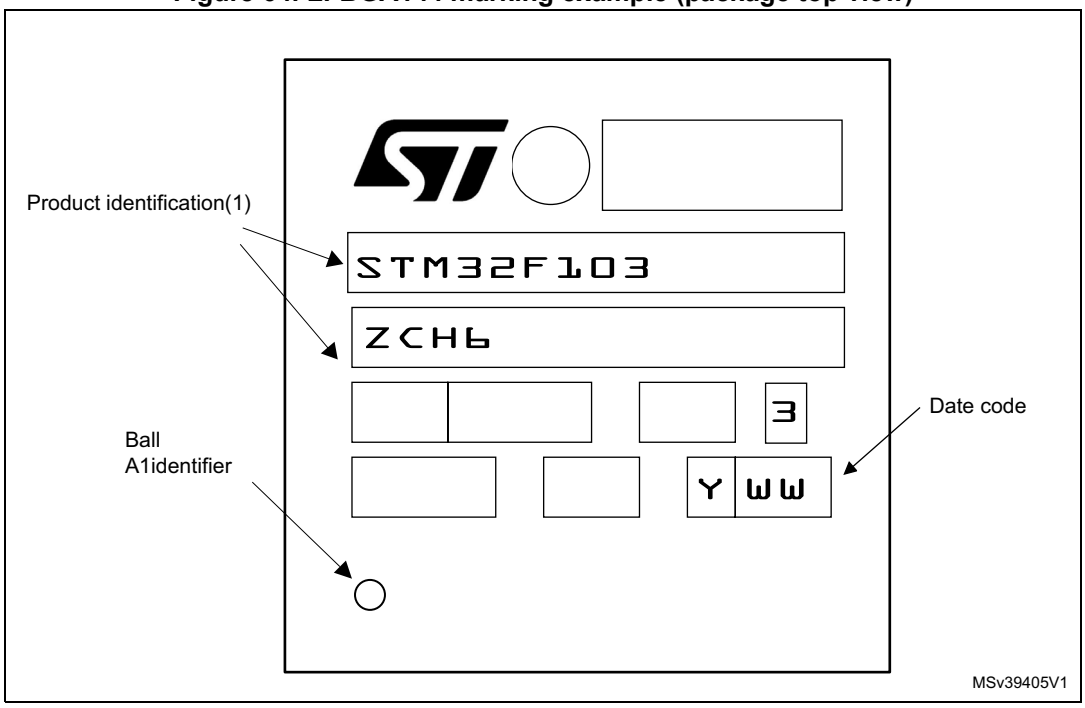

1. Parts marked as ES or E or accompanied by an Engineering Sample notification letter are not yet qualified and therefore not approved for use in production. ST is not responsible for any consequences resulting from such use. In no event will ST be liable for the customer using any of these engineering samples in production. ST's Quality department must be contacted prior to any decision to use these engineering samples to run a qualification activity

6.2 LFBGA100 package information

Figure 65. LFBGA100 - 10 x 10 mm low profile fine pitch ball grid array package outline

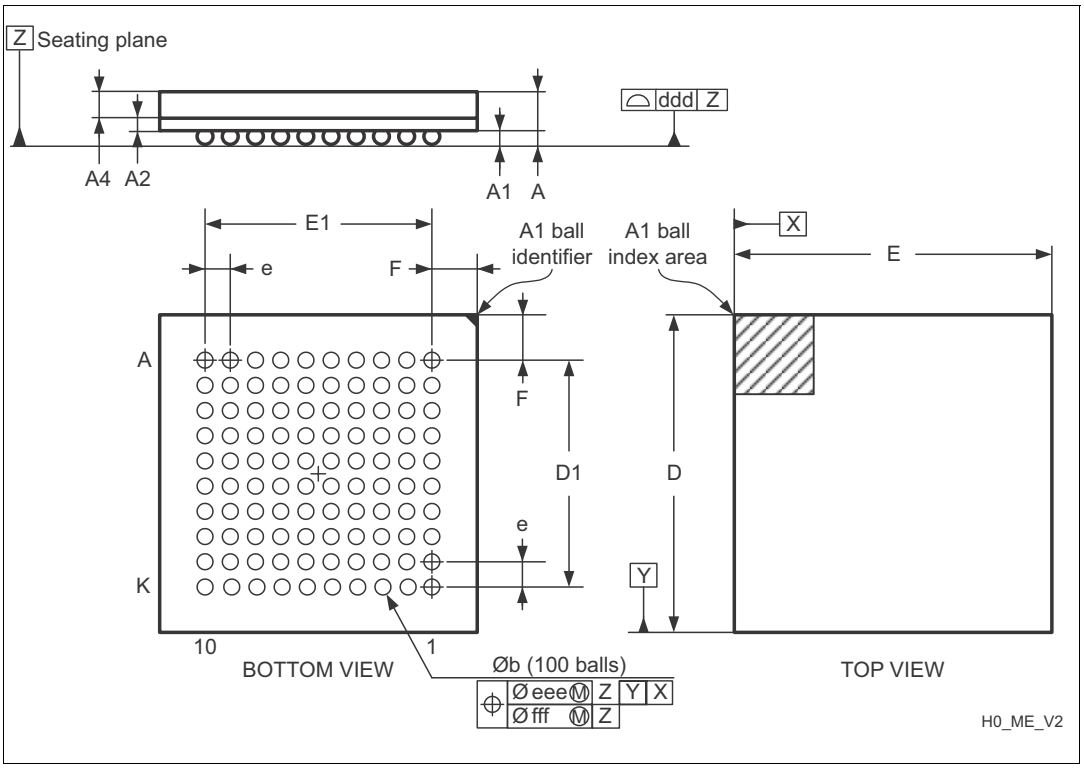

1. Drawing is not to scale.

Table 67. LFBGA100 - 10 x 10 mm low profile fine pitch ball grid array package mechanical data

Symbol	millimeters			inches(1)		
	Min	Typ	Max	Min	Typ	Max
A	-	-	1.700	-	-	0.0669
A1	0.270	-	-	0.0106	-	-
A2	-	0.300	-	-	0.0118	-
A4	-	-	0.800	-	-	0.0315
b	0.450	0.500	0.550	0.0177	0.0197	0.0217
D	9.850	10.000	10.150	0.3878	0.3937	0.3996
D1	-	7.200	-	-	0.2835	-
E	9.850	10.000	10.150	0.3878	0.3937	0.3996
E1	-	7.200	-	-	0.2835	-
e	-	0.800	-	-	0.0315	-
F	-	1.400	-	-	0.0551	-
ddd	-	-	0.120	-	-	0.0047

Table 67. LFBGA100 - 10 x 10 mm low profile fine pitch ball grid array package mechanical data

Symbol	millimeters			inches[1]		
	Min	Typ	Max	Min	Typ	Max
eee	-	-	0.150	-	-	0.0059
fff	-	-	0.080	-	-	0.0031

1. Values in inches are converted from mm and rounded to 4 decimal digits.

Figure 66. LFBGA100 – 100-ball low profile fine pitch ball grid array, 10 x 10 mm, 0.8 mm pitch, package recommended footprintoutline

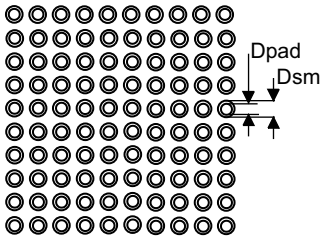

Table 68. LFBGA100 recommended PCB design rules (0.8 mm pitch BGA)

Dimension	Recommended values
Pitch	0.8
Dpad	0.500 mm
Dsm	0.570 mm typ. (depends on the soldermask registration tolerance)
Stencil opening	0.500 mm
Stencil thickness	Between 0.100 mm and 0.125 mm
Pad trace width	0.120 mm

Device marking for LFBGA100 package

The following figure gives an example of topside marking orientation versus ball A1 identifier location.

Figure 67. LFBGA100 marking example (package top view)

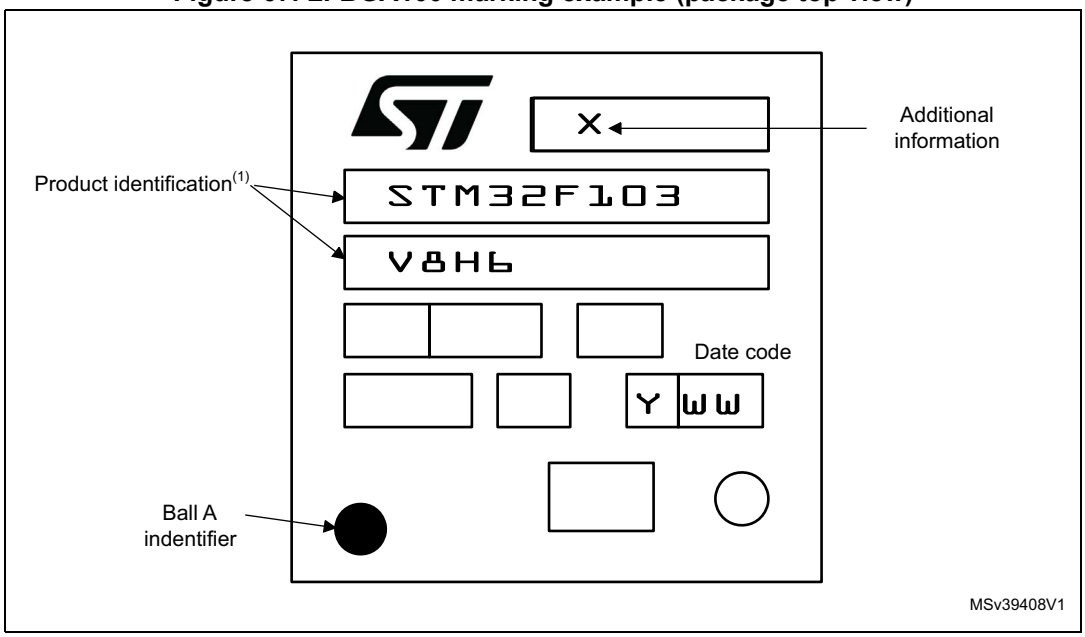

1. Parts marked as ES or E or accompanied by an Engineering Sample notification letter are not yet qualified and therefore not approved for use in production. ST is not responsible for any consequences resulting from such use. In no event will ST be liable for the customer using any of these engineering samples in production. ST's Quality department must be contacted prior to any decision to use these engineering samples to run a qualification activity

6.3 WLCSP64 package information

Figure 68. WLCSP, 64-ball 4.466 × 4.395 mm, 0.500 mm pitch, wafer-level chip-scale package outline

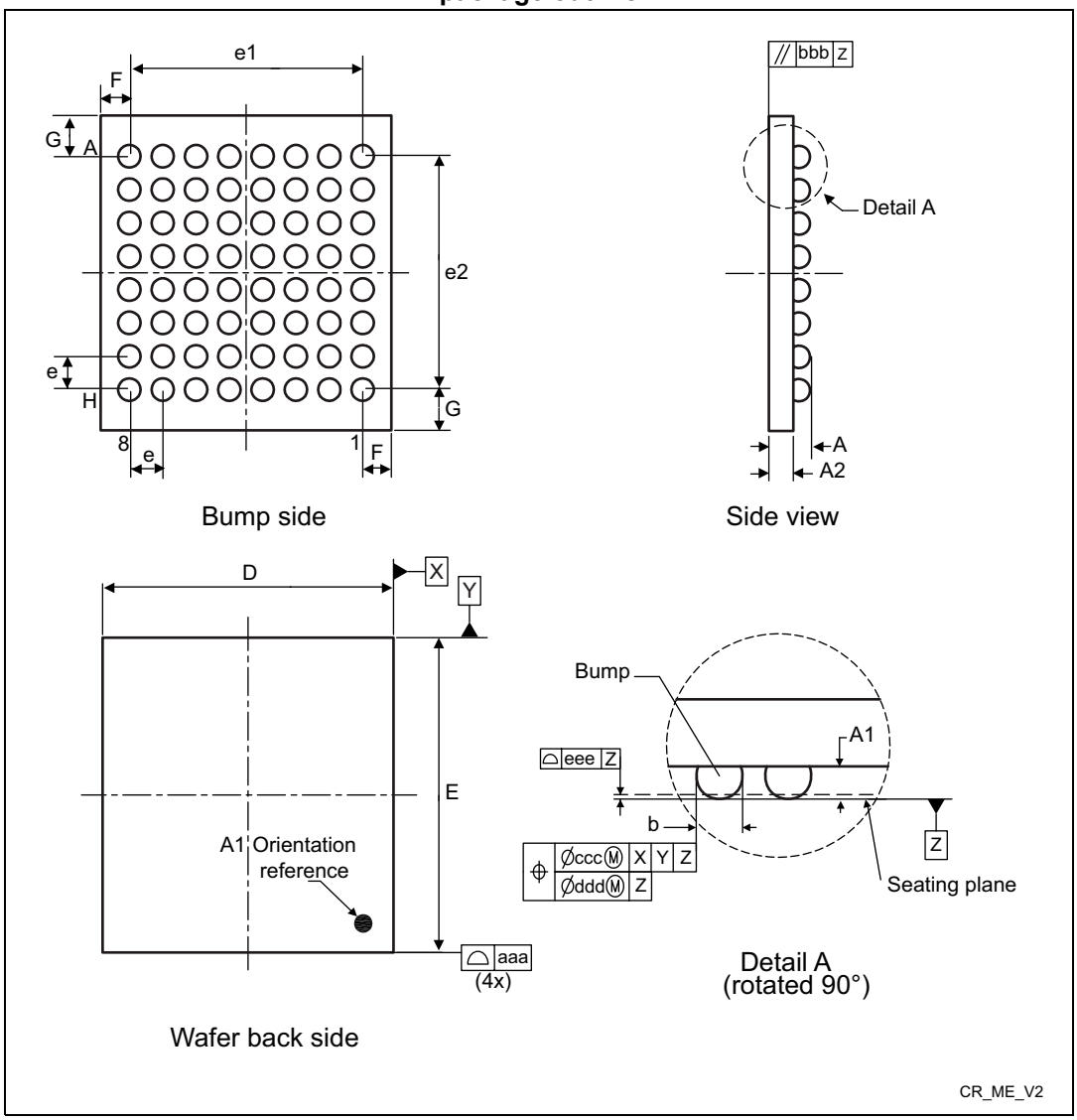

1. Drawing is not to scale.
2. Primary datum Z and seating plane are defined by the spherical crowns of the ball.

Table 69. WLCSP, 64-ball 4.466 × 4.395 mm, 0.500 mm pitch, wafer-level chip-scale package mechanical data

Symbol	millimeters			inches(1)		
	Min	Typ	Max	Min	Typ	Max
A	0.535	0.585	0.635	0.0211	0.0230	0.0250
A1	0.205	0.230	0.255	0.0081	0.0091	0.0100
A2	0.330	0.355	0.380	0.0130	0.0140	0.0150

Table 69. WLCSP, 64-ball 4.466 × 4.395 mm, 0.500 mm pitch, wafer-level chip-scale package mechanical data

Symbol	millimeters			inches[1]		
	Min	Typ	Max	Min	Typ	Max
b[2]	0.290	0.320	0.350	0.0114	0.0126	0.0138
e	-	0.500	-	-	0.0197	-
e1	-	3.500	-	-	0.1378	-
F	-	0.447	-	-	0.0176	-
G	-	0.483	-	-	0.0190	-
D	4.446	4.466	4.486	0.1750	0.1758	0.1766
E	4.375	4.395	4.415	0.1722	0.1730	0.1738
H	-	0.250	-	-	0.0098	-
L	-	0.200	-	-	0.0079	-
eee	-	0.05	-	-	0.0020	-
aaa	-	0.10	-	-	0.0039	-
Number of balls	64					

1. Values in inches are converted from mm and rounded to 4 decimal digits.
2. Dimension is measured at the maximum ball diameter parallel to primary datum Z.

Figure 69. WLCSP64 - 64-ball, 4.4757 x 4.4049 mm, 0.5 mm pitch wafer level chip scale package recommended footprint

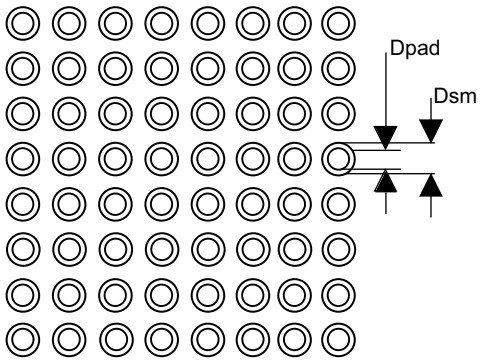

Table 70. WLCSP64 recommended PCB design rules (0.5 mm pitch)

Dimension	Recommended values
Pitch	0.5
Dpad	250 µm
Dsm	300 µm
Stencil Opening	320 µm

Table 70. WLCSP64 recommended PCB design rules (0.5 mm pitch) (continued)

Dimension	Recommended values
Stencil Thickness	Between 100 µm to 125 µm
Pad trace width	100 µm
Ball Diameter	320 µm

6.4 LQFP144 package information

Figure 70. LQFP144 - 144-pin, 20 x 20 mm low-profile quad flat package outline

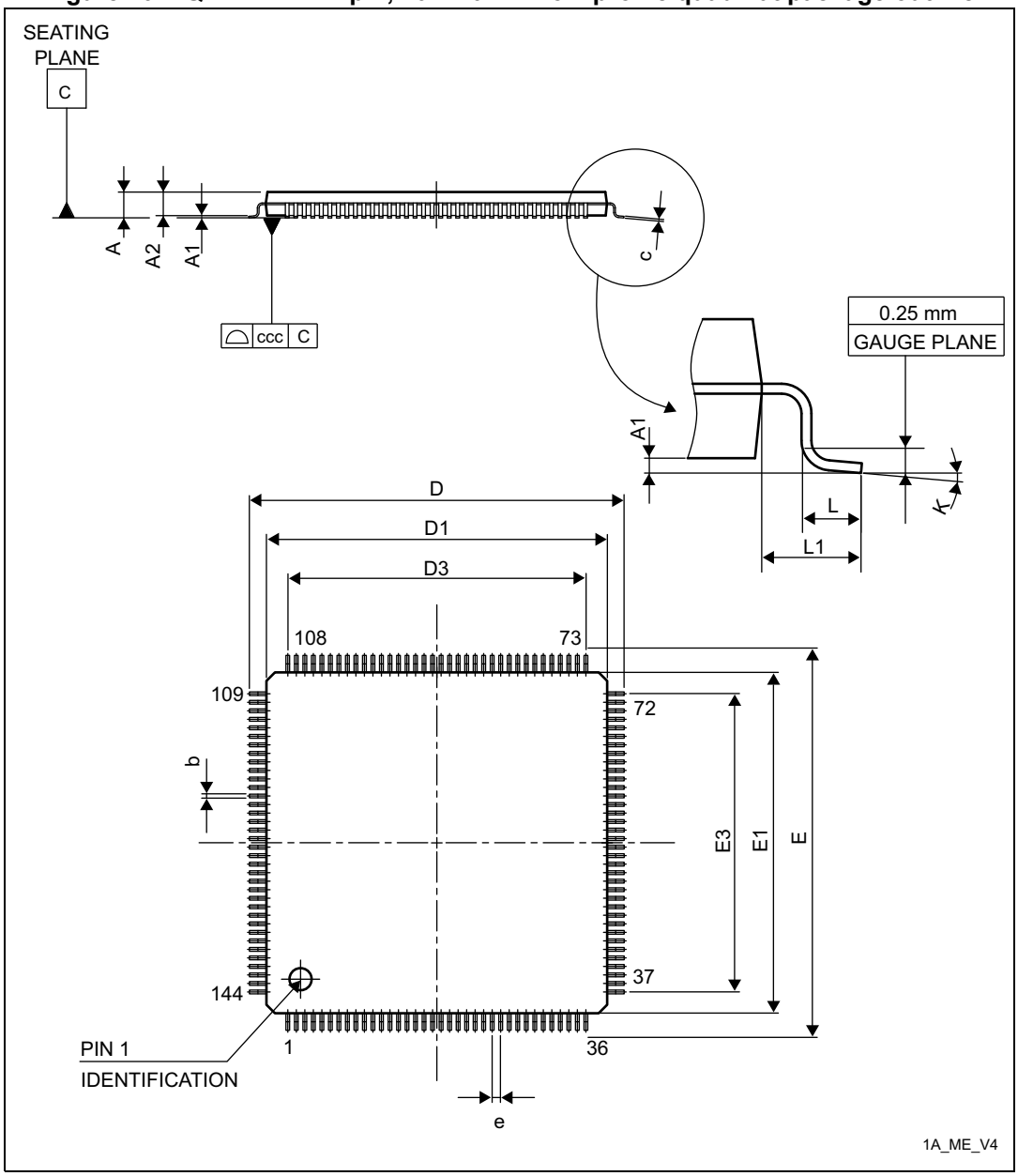

1. Drawing is not to scale.

Table 71. LQFP144 - 144-pin, 20 x 20 mm low-profile quad flat package mechanical data

Symbol	millimeters			inches[1]		
	Min	Typ	Max	Min	Typ	Max
A	-	-	1.600	-	-	0.0630
A1	0.050	-	0.150	0.0020	-	0.0059
A2	1.350	1.400	1.450	0.0531	0.0551	0.0571
b	0.170	0.220	0.270	0.0067	0.0087	0.0106
c	0.090	-	0.200	0.0035	-	0.0079
D	21.800	22.000	22.200	0.8583	0.8661	0.8740
D1	19.800	20.000	20.200	0.7795	0.7874	0.7953
D3	-	17.500	-	-	0.6890	-
E	21.800	22.000	22.200	0.8583	0.8661	0.8740
E1	19.800	20.000	20.200	0.7795	0.7874	0.7953
E3	-	17.500	-	-	0.6890	-
e	-	0.500	-	-	0.0197	-
L	0.450	0.600	0.750	0.0177	0.0236	0.0295
L1	-	1.000	-	-	0.0394	-
k	0°	3.5°	7°	0°	3.5°	7°
ccc	-	-	0.080	-	-	0.0031

1. Values in inches are converted from mm and rounded to 4 decimal digits.

Figure 71. LQFP144 - 144-pin,20 x 20 mm low-profile quad flat package recommended footprint

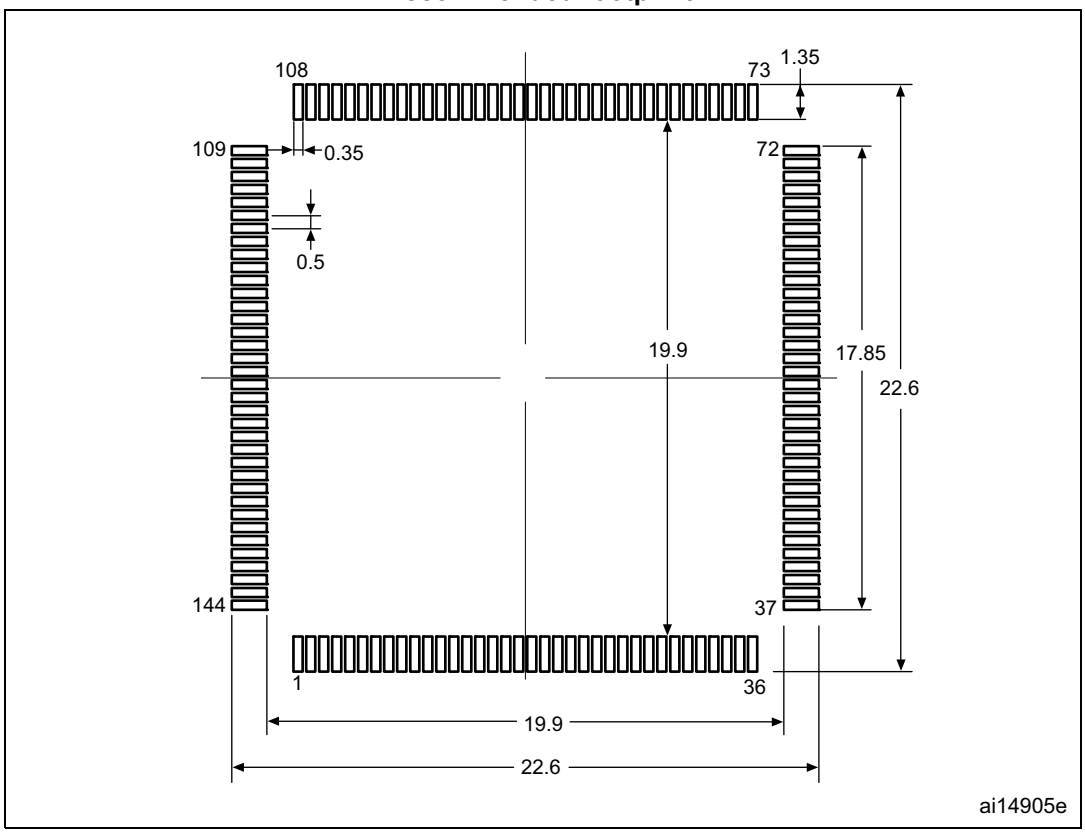

1. Dimensions are expressed in millimeters.

Device marking for LQFP144 package

The following figure gives an example of topside marking orientation versus pin 1 identifier location.

Figure 72. LQFP144 marking example (package top view)

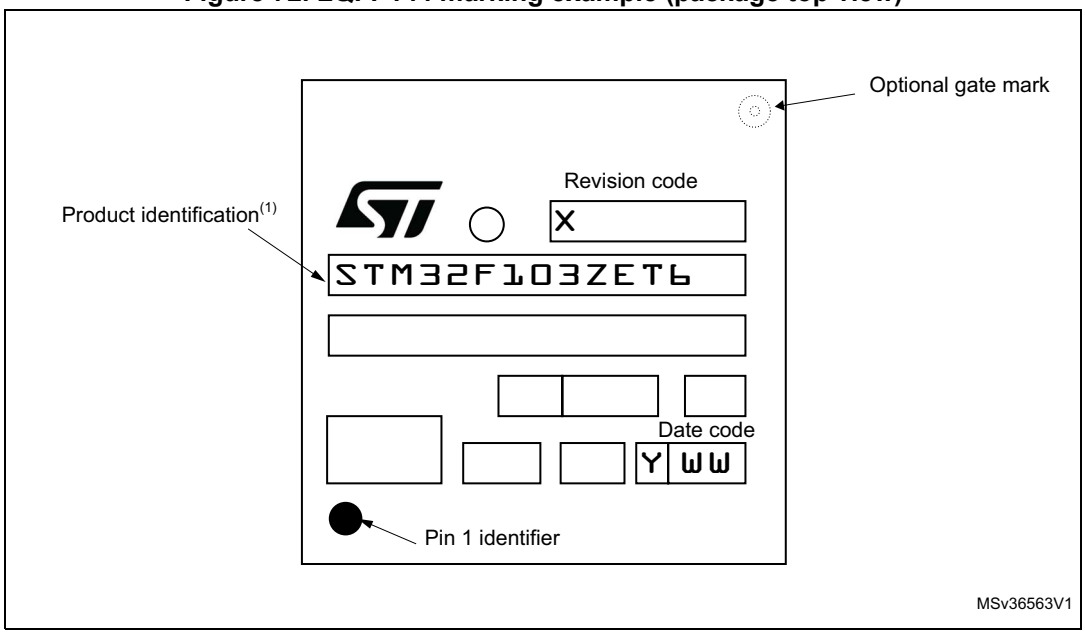

1. Parts marked as ES or E or accompanied by an Engineering Sample notification letter are not yet qualified and therefore not approved for use in production. ST is not responsible for any consequences resulting from such use. In no event will ST be liable for the customer using any of these engineering samples in production. ST's Quality department must be contacted prior to any decision to use these engineering samples to run a qualification activity

6.5 LQFP100 package information

Figure 73. LQFP100 – 14 x 14 mm 100 pin low-profile quad flat package outline

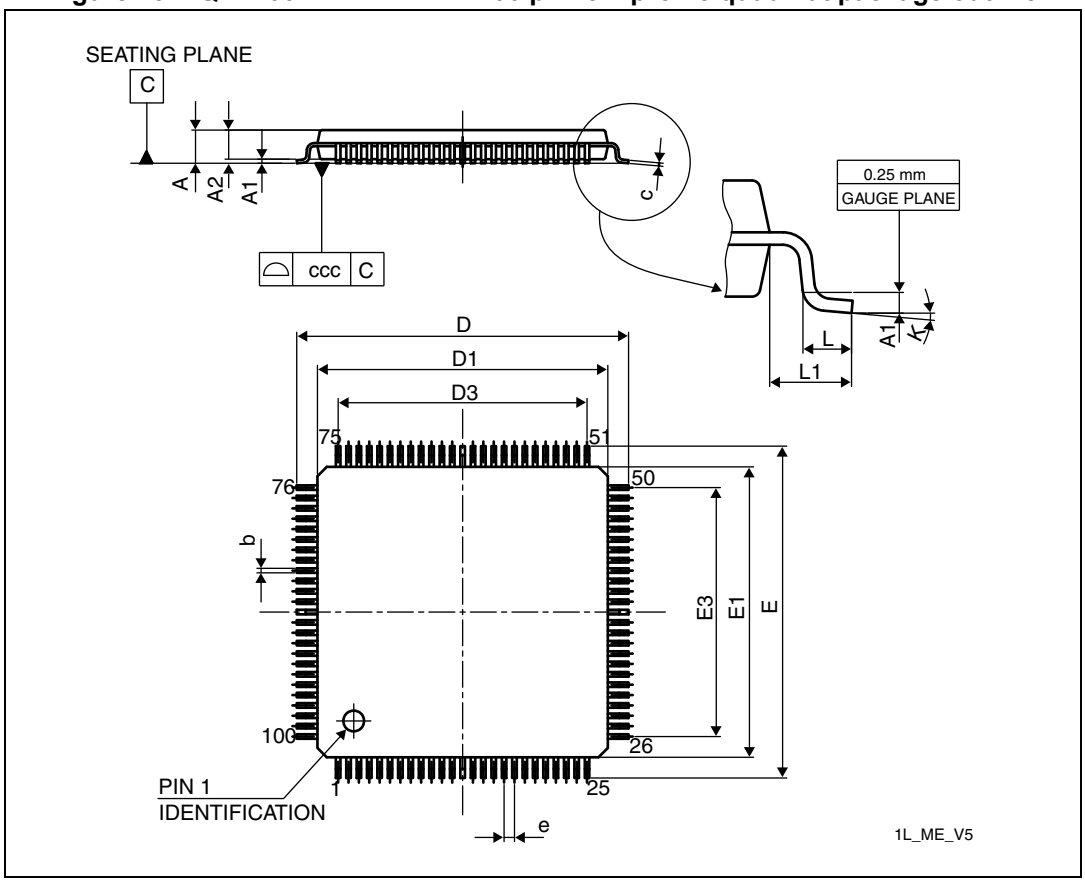

1. Drawing is not to scale.

Table 72. LQPF100 – 14 x 14 mm 100-pin low-profile quad flat package mechanical data

Symbol	millimeters			inches(1)		
	Min	Typ	Max	Min	Typ	Max
A	-	-	1.600	-	-	0.0630
A1	0.050	-	0.150	0.0020	-	0.0059
A2	1.350	1.400	1.450	0.0531	0.0551	0.0571
b	0.170	0.220	0.270	0.0067	0.0087	0.0106
c	0.090	-	0.200	0.0035	-	0.0079
D	15.800	16.000	16.200	0.6220	0.6299	0.6378
D1	13.800	14.000	14.200	0.5433	0.5512	0.5591
D3	-	12.000	-	-	0.4724	-
E	15.800	16.000	16.200	0.6220	0.6299	0.6378
E1	13.800	14.000	14.200	0.5433	0.5512	0.5591

Table 72. LQPF100 – 14 x 14 mm 100-pin low-profile quad flat package mechanical data (continued)

Symbol	millimeters			inches(1)		
	Min	Typ	Max	Min	Typ	Max
E3	-	12.000	-	-	0.4724	-
e	-	0.500	-	-	0.0197	-
L	0.450	0.600	0.750	0.0177	0.0236	0.0295
L1	-	1.000	-	-	0.0394	-
k	0°	3.5°	7°	0°	3.5°	7°
ccc	-	-	0.08	-	-	0.0031

1. Values in inches are converted from mm and rounded to 4 decimal digits.

Figure 74. LQFP100 recommended footprint

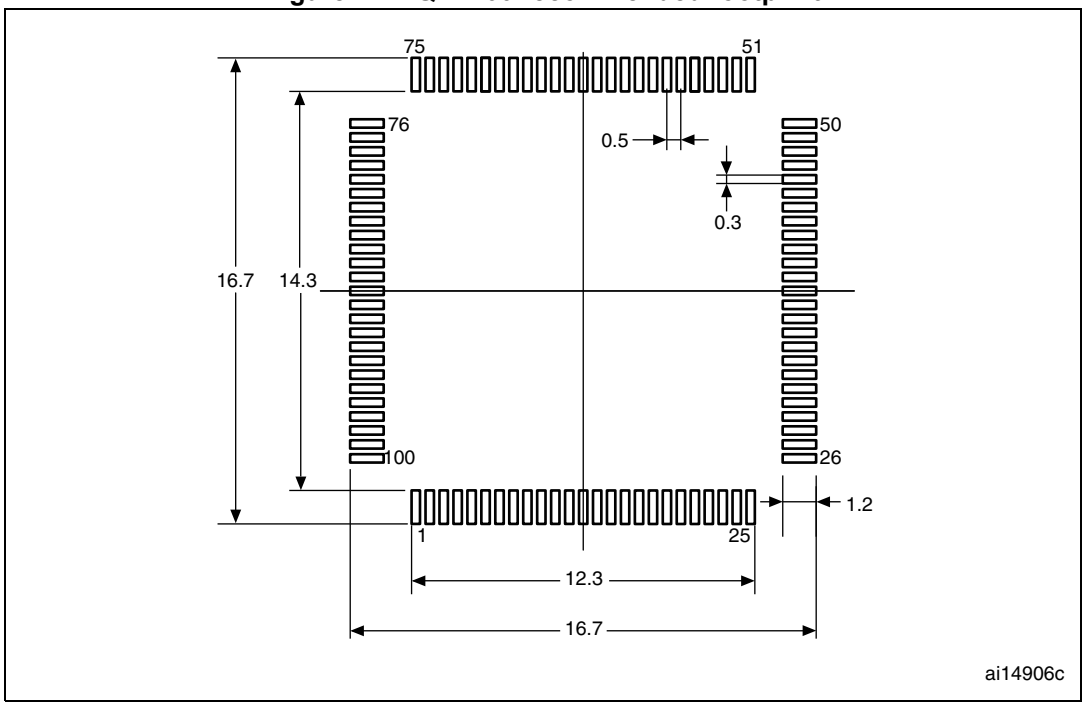

1. Dimensions are in millimeters.

Device marking for LQFP100 package

The following figure gives an example of topside marking orientation versus pin 1 identifier location.

Figure 75. LQFP100 marking example (package top view)

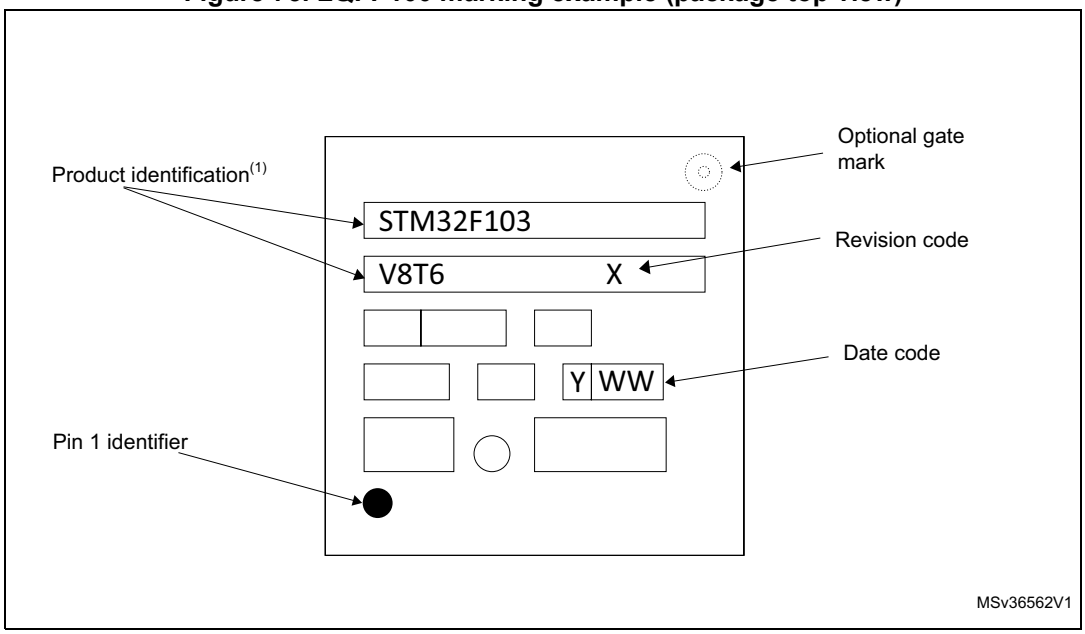

1. Parts marked as ES or E or accompanied by an Engineering Sample notification letter are not yet qualified and therefore not approved for use in production. ST is not responsible for any consequences resulting from such use. In no event will ST be liable for the customer using any of these engineering samples in production. ST's Quality department must be contacted prior to any decision to use these engineering samples to run a qualification activity

6.6 LQFP64 package information

Figure 76. LQFP64 – 10 x 10 mm 64 pin low-profile quad flat package outline

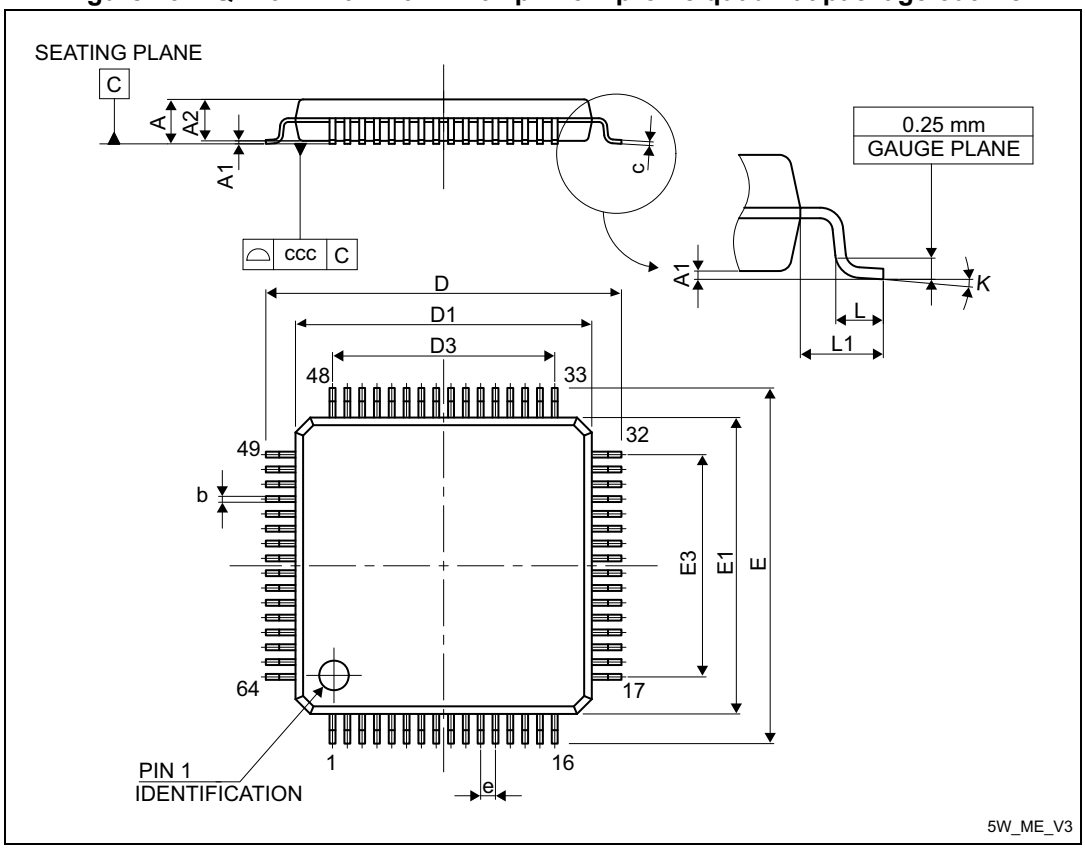

1. Drawing is not in scale.

Table 73. LQFP64 – 10 x 10 mm 64 pin low-profile quad flat package mechanical data

Symbol	millimeters			inches(1)		
	Min	Typ	Max	Min	Typ	Max
A	-	-	1.600	-	-	0.0630
A1	0.050	-	0.150	0.0020	-	0.0059
A2	1.350	1.400	1.450	0.0531	0.0551	0.0571
b	0.170	0.220	0.270	0.0067	0.0087	0.0106
c	0.090	-	0.200	0.0035	-	0.0079
D	-	12.000	-	-	0.4724	-
D1	-	10.000	-	-	0.3937	-
D3	-	7.500	-	-	0.2953	-
E	-	12.000	-	-	0.4724	-
E1	-	10.000	-	-	0.3937	-

Table 73. LQFP64 – 10 x 10 mm 64 pin low-profile quad flat package mechanical data (continued)

Symbol	millimeters			inches[1]		
	Min	Typ	Max	Min	Typ	Max
E3	-	7.500	-	-	0.2953	-
e	-	0.500	-	-	0.0197	-
θ	0°	3.5°	7°	0°	3.5°	7°
L	0.450	0.600	0.750	0.0177	0.0236	0.0295
L1	-	1.000	-	-	0.0394	-
ccc	-	-	0.080	-	-	0.0031

1. Values in inches are converted from mm and rounded to 4 decimal digits.

Figure 77. LQFP64 - 64-pin, 10 x 10 mm low-profile quad flat recommended footprint

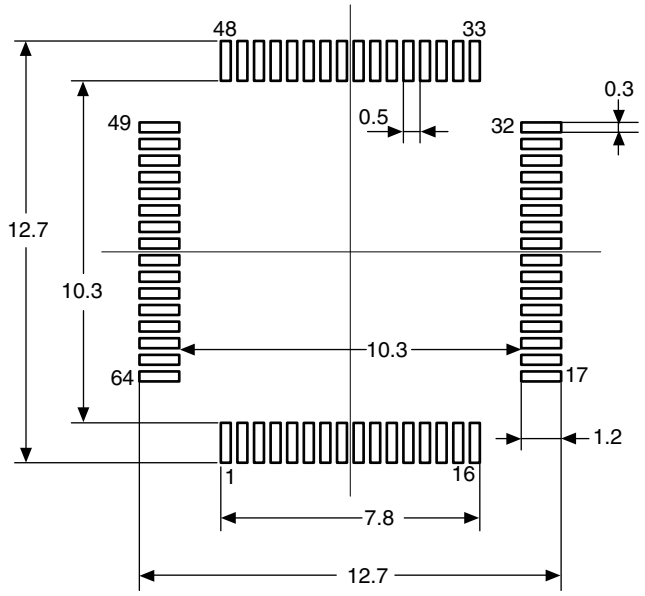

1. Dimensions are in millimeters.

Device marking for LQFP64 package

The following figure gives an example of topside marking orientation versus pin 1 identifier location.

Figure 78. LQFP64 marking example (package top view)

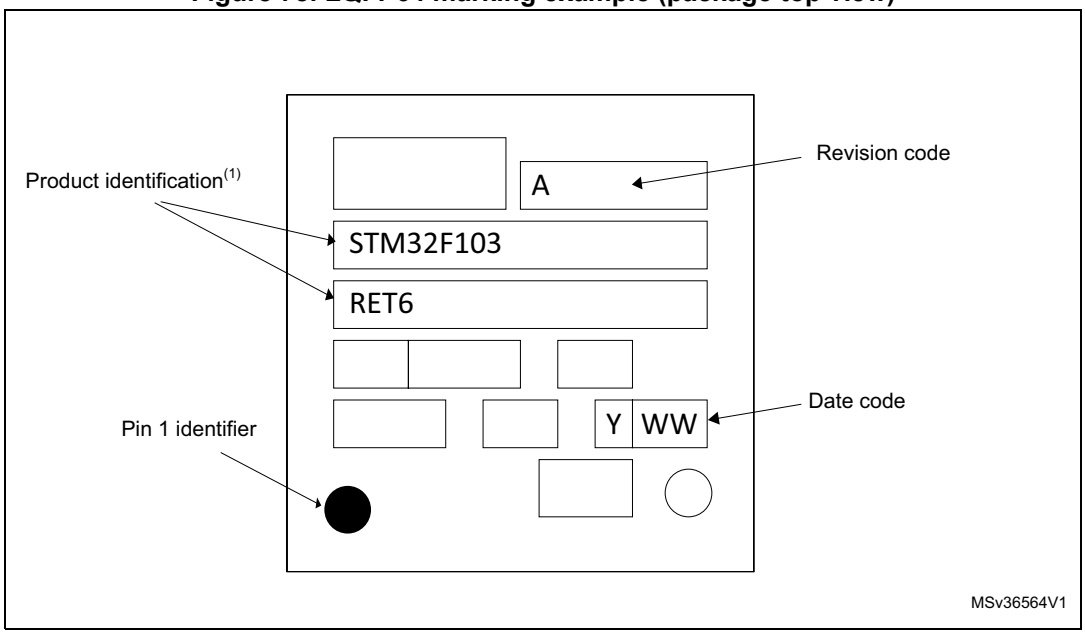

1. Parts marked as ES or E or accompanied by an Engineering Sample notification letter are not yet qualified and therefore not approved for use in production. ST is not responsible for any consequences resulting from such use. In no event will ST be liable for the customer using any of these engineering samples in production. ST's Quality department must be contacted prior to any decision to use these engineering samples to run a qualification activity

6.7 Thermal characteristics

The maximum chip junction temperature ($T_J$max) must never exceed the values given in *Table 10: General operating conditions on page 44*.

The maximum chip-junction temperature, T_J max, in degrees Celsius, may be calculated using the following equation:

T_J max = T_A max + (P_D max x Θ_{JA})

Where:

- T_A max is the maximum ambient temperature in °C,
- Θ_{JA} is the package junction-to-ambient thermal resistance, in °C/W,
- P_D max is the sum of P_{INT} max and $P_{I/O}$ max (P_D max = P_{INT} max + $P_{I/O}$max),
- P_{INT} max is the product of I_{DD} and V_{DD}, expressed in Watts. This is the maximum chip internal power.

$P_{I/O}$ max represents the maximum power dissipation on output pins where:

$$P_{I/O} \text{ max} = \Sigma (V_{OL} \times I_{OL}) + \Sigma((V_{DD} - V_{OH}) \times I_{OH}),$$

taking into account the actual V_{OL} / I_{OL} and V_{OH} / I_{OH} of the I/Os at low and high level in the application.

Table 74. Package thermal characteristics

Symbol	Parameter	Value	Unit
Θ_{JA}	**Thermal resistance junction-ambient** LFBGA144 - 10 × 10 mm / 0.8 mm pitch	40	°C/W
	Thermal resistance junction-ambient LQFP144 - 20 × 20 mm / 0.5 mm pitch	30	
	Thermal resistance junction-ambient LFBGA100 - 10 × 10 mm / 0.8 mm pitch	40	
	Thermal resistance junction-ambient LQFP100 - 14 × 14 mm / 0.5 mm pitch	46	
	Thermal resistance junction-ambient LQFP64 - 10 × 10 mm / 0.5 mm pitch	45	
	Thermal resistance junction-ambient WLCSP64	50	

6.7.1 Reference document

JESD51-2 Integrated Circuits Thermal Test Method Environment Conditions - Natural Convection (Still Air). Available from www.jedec.org

6.7.2 Selecting the product temperature range

When ordering the microcontroller, the temperature range is specified in the ordering information scheme shown in *Table 75: Ordering information scheme*.

Each temperature range suffix corresponds to a specific guaranteed ambient temperature at maximum dissipation and, to a specific maximum junction temperature.

As applications do not commonly use the STM32F103xC, STM32F103xD and STM32F103xE at maximum dissipation, it is useful to calculate the exact power consumption and junction temperature to determine which temperature range will be best suited to the application.

The following examples show how to calculate the temperature range needed for a given application.

Example 1: High-performance application

Assuming the following application conditions:

Maximum ambient temperature T_{Amax} = 82 °C (measured according to JESD51-2), I_{DDmax} = 50 mA, V_{DD} = 3.5 V, maximum 20 I/Os used at the same time in output at low level with I_{OL} = 8 mA, V_{OL}= 0.4 V and maximum 8 I/Os used at the same time in output at low level with I_{OL} = 20 mA, V_{OL}= 1.3 V

P_{INTmax} = 50 mA × 3.5 V= 175 mW

P_{IOmax} = 20 × 8 mA × 0.4 V + 8 × 20 mA × 1.3 V = 272 mW

This gives: P_{INTmax} = 175 mW and P_{IOmax} = 272 mW:

P_{Dmax} = 175 + 272 = 447 mW

Thus: P_{Dmax} = 447 mW

Using the values obtained in *Table 74* T_{Jmax} is calculated as follows:

– For LQFP100, 46 °C/W

T_{Jmax} = 82 °C + (46 °C/W × 447 mW) = 82 °C + 20.6 °C = 102.6 °C

This is within the range of the suffix 6 version parts (–40 < T_J < 105 °C).

In this case, parts must be ordered at least with the temperature range suffix 6 (see *Table 75: Ordering information scheme*).

Example 2: High-temperature application

Using the same rules, it is possible to address applications that run at high ambient temperatures with a low dissipation, as long as junction temperature T_J remains within the specified range.

Assuming the following application conditions:

Maximum ambient temperature T_{Amax} = 115 °C (measured according to JESD51-2), I_{DDmax} = 20 mA, V_{DD} = 3.5 V, maximum 20 I/Os used at the same time in output at low level with I_{OL} = 8 mA, V_{OL}= 0.4 V

P_{INTmax} = 20 mA × 3.5 V= 70 mW

P_{IOmax} = 20 × 8 mA × 0.4 V = 64 mW

This gives: P_{INTmax} = 70 mW and P_{IOmax} = 64 mW:

P_{Dmax} = 70 + 64 = 134 mW

Thus: P_{Dmax} = 134 mW

Using the values obtained in *Table 74* T_{Jmax} is calculated as follows:

– For LQFP100, 46 °C/W

T_{Jmax} = 115 °C + (46 °C/W × 134 mW) = 115 °C + 6.2 °C = 121.2 °C

This is within the range of the suffix 7 version parts (–40 < T_J < 125 °C).

In this case, parts must be ordered at least with the temperature range suffix 7 (see *Table 75: Ordering information scheme*).

Figure 79. LQFP100 P_D max vs. T_A

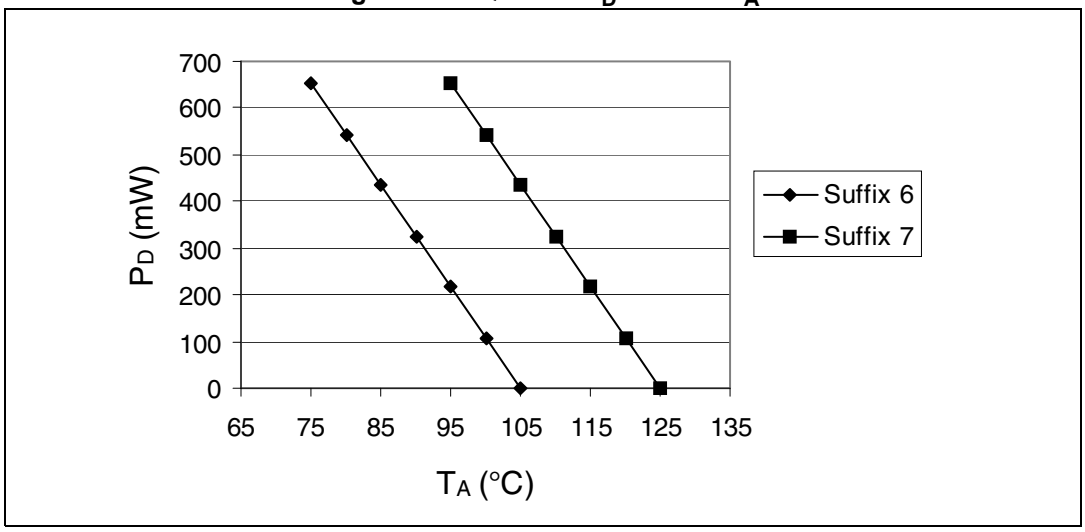

7 Ordering information

Table 75. Ordering information scheme

Example: STM32 F 103 R C T 6 xxx

Device family

STM32 = Arm-based 32-bit microcontroller

Product type

F = general-purpose

Device subfamily

103 = performance line

Pin count

R = 64 pins

V = 100 pins

Z = 144 pins

Flash memory size

C = 256 Kbytes of Flash memory

D = 384 Kbytes of Flash memory

E = 512 Kbytes of Flash memory

Package

H = BGA

T = LQFP

Y = WLCSP64

Temperature range

6 = Industrial temperature range, –40 to 85 °C.

7 = Industrial temperature range, –40 to 105 °C.

Options

xxx = programmed parts

TR = tape and real

For a list of available options (speed, package, etc.) or for further information on any aspect of this device, please contact your nearest ST sales office.

8 Revision history

Table 76.Document revision history

Date	Revision	Changes
07-Apr-2008	1	Initial release.
22-May-2008	2	Document status promoted from Target Specification to Preliminary Data. *Section 1: Introduction* and *Section 2.2: Full compatibility throughout the family* modified. Small text changes. *Note 2* added in *Table 2: STM32F103xC, STM32F103xD and STM32F103xE features and peripheral counts on page 11*. LQPF100/BGA100 column added to *Table 6: FSMC pin definition on page 38*. Values and Figures added to *Maximum current consumption on page 62* (see *Table 18*, *Table 19*, *Table 20* and *Table 21* and see *Figure 14*, *Figure 15*, *Figure 17*, *Figure 18* and *Figure 19*). Values added to *Typical current consumption on page 73* (see *Table 22*, *Table 23* and *Table 24*). *Table 19: Typical current consumption in Standby mode* removed. *Note 4* and *Note 1* added to *Table 65: USB DC electrical characteristics* and *Table 66: USB: full-speed electrical characteristics on page 129*, respectively. V_{USB} added to *Table 65: USB DC electrical characteristics on page 129*. *Figure 68: Recommended footprint(1) on page 143* corrected. *Equation 1* corrected. *Figure 73: LQFP100 PD max vs. TA on page 149* modified. Tolerance values corrected in *Table 74: LFBGA144 – 144-ball low profile fine pitch ball grid array, 10 x 10 mm, 0.8 mm pitch, package data on page 139*.

Table 76.Document revision history

Date	Revision	Changes
21-Jul-2008	3	Document status promoted from Preliminary Data to full datasheet. *FSMC (flexible static memory controller) on page 22* modified. Number of complementary channels corrected in *Figure 1: STM32F103xF, STM32F103xD and STM32F103xGSTM32F103xF and STM32F103xG performance line block diagram*. *Power supply supervisor on page 23* modified and V_{DDA} added to *Table 14: General operating conditions on page 59*. Table notes revised in *Section 5: Electrical characteristics*. Capacitance modified in *Figure 12: Power supply scheme on page 57*. *Table 60: SCL frequency (fPCLK1= 36 MHz.,VDD = 3.3 V)* updated. *Table 61: SPI characteristics* modified, $t_{h(NSS)}$ modified in *Figure 49: SPI timing diagram - slave mode and CPHA = 0 on page 123*. Minimum SDA and SCL fall time value for Fast mode removed from *Table 59: I2C characteristics on page 120*, note 1 modified. I_{DD_VBAT} values and some I_{DD} values with regulator in run mode added to *Table 21: Typical and maximum current consumptions in Stop and Standby modes on page 68*. *Table 34: Flash memory endurance and data retention on page 87* updated. $t_{su(NSS)}$ modified in *Table 61: SPI characteristics on page 122*. EO corrected in *Table 70: ADC accuracy on page 132*. *Figure 58: Typical connection diagram using the ADC on page 133* and note below corrected. Typical T_{S_temp} value removed from *Table 72: TS characteristics on page 137*. *Section 6.1: Package mechanical data on page 138* updated. Small text changes.

Table 76.Document revision history

Date	Revision	Changes
12-Dec-2008	4	Timers specified *on page 1* (motor control capability mentioned). *Section 2.2: Full compatibility throughout the family* updated. *Table 6: High-density timer feature comparison* added. *General-purpose timers (TIMx)* and *Advanced-control timers (TIM1 and TIM8) on page 27* updated. *Figure 1: STM32F103xF, STM32F103xD and STM32F103xGSTM32F103xF and STM32F103xG performance line block diagram* modified. *Note 10* added, main function after reset and *Note 5 on page 44* updated in *Table 8: High-density STM32F103xx pin definitions*. *Note 2* modified below *Table 11: Voltage characteristics on page 58*, $\|DV_{DDx}\|$ min and $\|DV_{DDx}\|$ min removed. *Note 2* and P_D values for LQFP144 and LFBGA144 packages added to *Table 14: General operating conditions on page 59*. Measurement conditions specified in *Section 5.3.5: Supply current characteristics on page 62*. Max values at T_A = 85 °C and T_A = 105 °C updated in *Table 21: Typical and maximum current consumptions in Stop and Standby modes on page 68*. *Section 5.3.10: FSMC characteristics on page 87* updated. Data added to *Table 50: EMI characteristics on page 111*. I_{VREF} added to *Table 67: ADC characteristics on page 130*. *Table 81: Package thermal characteristics on page 146* updated. Small text changes.

Table 76.Document revision history

Date	Revision	Changes
30-Mar-2009	5	I/O information clarified *on page 1*. *Figure 4: STM32F103xC and STM32F103xE performance line BGA100 ballout* corrected. I/O information clarified *on page 1*. In *Table 5: High-density STM32F103xx pin definitions*: – I/O level of pins PF11, PF12, PF13, PF14, PF15, G0, G1 and G15 updated – PB4, PB13, PB14, PB15, PB3/TRACESWO moved from Default column to Remap column PG14 pin description modified in *Table 6: FSMC pin definition*. *Figure 9: Memory map on page 54* modified. Note modified in *Table 18: Maximum current consumption in Run mode, code with data processing running from Flash* and *Table 20: Maximum current consumption in Sleep mode, code running from Flash or RAM*. *Figure 17*, *Figure 18* and *Figure 19* show typical curves (titles changed). *Table 25: High-speed external user clock characteristics* and *Table 26: Low-speed external user clock characteristics* modified. ACC_{HSI} max values modified in *Table 29: HSI oscillator characteristics*. FSMC configuration modified for *Asynchronous waveforms and timings*. Notes modified below *Figure 24: Asynchronous non-multiplexed SRAM/PSRAM/NOR read waveforms* and *Figure 25: Asynchronous non-multiplexed SRAM/PSRAM/NOR write waveforms*. $t_{w(NADV)}$ values modified in *Table 35: Asynchronous non-multiplexed SRAM/PSRAM/NOR read timings* and *Table 39: Asynchronous multiplexed PSRAM/NOR write timings*. $t_{h(Data_NWE)}$ modified in *Table 36: Asynchronous non-multiplexed SRAM/PSRAM/NOR write timings* In *Table 41: Synchronous multiplexed PSRAM write timings* and *Table 43: Synchronous non-multiplexed PSRAM write timings*: – $t_{v(Data-CLK)}$ renamed as $t_{d(CLKL-Data)}$ – $t_{d(CLKL-Data)}$ min value removed and max value added – $t_{h(CLKL-DV)}$ / $t_{h(CLKL-ADV)}$ removed *Figure 28: Synchronous multiplexed NOR/PSRAM read timings*, *Figure 29: Synchronous multiplexed PSRAM write timings* and *Figure 31: Synchronous non-multiplexed PSRAM write timings* modified. *Figure 52: I2S slave timing diagram (Philips protocol)(1)* and *Figure 53: I2S master timing diagram (Philips protocol)(1)* modified. WLCSP64 package added (see *Figure 8: STM32F103xC and STM32F103xE performance line WLCSP64 ballout, ball side*, *Table 8: High-density STM32F103xx pin definitions*, *Figure 65: WLCSP, 64-ball 4.466 × 4.395 mm, 0.500 mm pitch, wafer-level chip-scale package outline* and *Table 76: WLCSP, 64-ball 4.466 × 4.395 mm, 0.500 mm pitch, wafer-level chip-scale package mechanical data*). Small text changes.

Table 76.Document revision history

Date	Revision	Changes
21-Jul-2009	6	*Figure 1: STM32F103xC, STM32F103xD and STM32F103xE performance line block diagram* updated. *Note 5* updated and *Note 4* added in *Table 5: High-density STM32F103xC/D/E pin definitions*. V_{RERINT} and T_{Coeff} added to *Table 13: Embedded internal reference voltage*. *Table 16: Maximum current consumption in Sleep mode, code running from Flash or RAM* modified. f_{HSE_ext} min modified in *Table 21: High-speed external user clock characteristics*. C_{L1} and C_{L2} replaced by C in *Table 23: HSE 4-16 MHz oscillator characteristics* and *Table 24: LSE oscillator characteristics (f_{LSE} = 32.768 kHz)*, notes modified and moved below the tables. *Note 1* modified below *Figure 29: Synchronous multiplexed PSRAM write timings*. *Table 25: HSI oscillator characteristics* modified. Conditions removed from *Table 27: Low-power mode wakeup timings*. Jitter added to *Table 28: PLL characteristics*. *Figure 47: Recommended NRST pin protection* modified. In *Table 31: Asynchronous non-multiplexed SRAM/PSRAM/NOR read timings*: $t_{h(BL_NOE)}$ and $t_{h(A_NOE)}$ modified. In *Table 32: Asynchronous non-multiplexed SRAM/PSRAM/NOR write timings*: $t_{h(A_NWE)}$ and $t_{h(Data_NWE)}$ modified. In *Table 33: Asynchronous multiplexed PSRAM/NOR read timings*: $t_{h(AD_NADV)}$ and $t_{h(A_NOE)}$ modified. In *Table 34: Asynchronous multiplexed PSRAM/NOR write timings*: $t_{h(A_NWE)}$ modified. In *Table 35: Synchronous multiplexed NOR/PSRAM read timings*: $t_{h(CLKH-NWAITV)}$ modified. In *Table 40: Switching characteristics for NAND Flash read and write cycles*: $t_{h(NOE-D)}$ modified. *Table 53: SPI characteristics* modified. Values added to *Table 54: I^2S characteristics* and *Table 55: SD / MMC characteristics*. C_{ADC} and R_{AIN} parameters modified in *Table 59: ADC characteristics*. R_{AIN} max values modified in *Table 60: R_{AIN} max for f_{ADC} = 14 MHz*. *Table 71: DAC characteristics* modified. *Figure 61: 12-bit buffered /non-buffered DAC* added. *Figure 63: LFBGA100 - 10 x 10 mm low profile fine pitch ball grid array package outline* and *Table 75: LFBGA100 - 10 x 10 mm low profile fine pitch ball grid array package mechanical data* updated.
24-Sep-2009	7	Number of DACs corrected in *Table 3: STM32F103xx family*. I_{DD_VBAT} updated in *Table 17: Typical and maximum current consumptions in Stop and Standby modes*. *Figure 16: Typical current consumption on V_{BAT} with RTC on vs. temperature at different V_{BAT} values* added. IEC 1000 standard updated to IEC 61000 and SAE J1752/3 updated to IEC 61967-2 in *Section 5.3.11: EMC characteristics on page 86*. *Table 63: DAC characteristics* modified. Small text changes.

Table 76.Document revision history

Date	Revision	Changes
19-Apr-2011	8	Updated package choice for 103Rx in *Table 2* Updated footnotes below *Table 7: Voltage characteristics on page 43* and *Table 8: Current characteristics on page 43* Updated tw min in *Table 21: High-speed external user clock characteristics on page 58* Updated startup time in *Table 24: LSE oscillator characteristics (f_{LSE} = 32.768 kHz) on page 61* Updated note 2 in *Table 51: I^2C characteristics on page 96* Updated *Figure 48: I^2C bus AC waveforms and measurement circuit* Updated *Figure 47: Recommended NRST pin protection* Updated *Section 5.3.14: I/O port characteristics* Updated *Table 35: Synchronous multiplexed NOR/PSRAM read timings on page 72* Updated FSMC *Figure 26* thru *Figure 31* Updated *Figure 41.: NAND controller waveforms for common memory write access* and *Figure 48.: I^2C bus AC waveforms and measurement circuit* Added *Section 5.3.13: I/O current injection characteristics* Updated *Figure 67* and added *Table 69: WLCSP, 64-ball 4.466 × 4.395 mm, 0.500 mm pitch, wafer-level chip-scale package mechanical data on page 120* LQFP64 package mechanical data updated: see *Figure 73.: LQFP64 – 10 x 10 mm 64 pin low-profile quad flat package outline* and *Table 73: LQFP64 – 10 x 10 mm 64 pin low-profile quad flat package mechanical data on page 129*.
30-Sept-2014	9	Added *Note 7* in *Table 5: High-density STM32F103xC/D/E pin definitions on page 31*. Updated *Note 10* in *Table 5: High-density STM32F103xC/D/E pin definitions on page 31*. Modified *Note 2* in *Table 62: ADC accuracy on page 108* Modified *Note 3* in *Table 62: ADC accuracy on page 108* Modified notes in *Table 51: I^2C characteristics on page 96* Updated *Figure 51: SPI timing diagram - master mode(1) on page 100*
23-Feb-2015	10	Updated *Figure 66.: BGA pad footprint*, *Figure 70: LQFP144 - 144-pin, 20 x 20 mm low-profile quad flat package outline*, *Figure 73.: LQFP100 – 14 x 14 mm 100 pin low-profile quad flat package outline*, *Figure 74.: LQFP100 recommended footprint*, *Figure 76.: LQFP64 – 10 x 10 mm 64 pin low-profile quad flat package outline*, *Figure 77.: LQFP64 - 64-pin, 10 x 10 mm low-profile quad flat recommended footprint* Added *Figure 72.: LQFP144 marking example (package top view)*, *Figure 75.: LQFP100 marking example (package top view)*, *Figure 78.: LQFP64 marking example (package top view)* Updated *Table 72: LQPF100 – 14 x 14 mm 100-pin low-profile quad flat package mechanical data*, *Table 73: LQFP64 – 10 x 10 mm 64 pin low-profile quad flat package mechanical data*

Table 76.Document revision history

Date	Revision	Changes
31-08-2015	11	Replaced USBDP and USBDM by USB_DP and USB_DM in the whole document. Updated: – Introduction – Reference standard in *Table 43: ESD absolute maximum ratings*. – Updated I_{DDA} description in *Table 63: DAC characteristics*. – *Section : I2C interface characteristics* – *Figure 62: LFBGA144 – 144-ball low profile fine pitch ball grid array, 10 x 10 mm, 0.8 mm pitch, package outline* – Updated sentence before *Figure 78: LQFP64 marking example (package top view)*. – *Figure 65: LFBGA100 - 10 x 10 mm low profile fine pitch ball grid array package outline* and sentence before *Figure 75: LQFP100 marking example (package top view)* – *Figure 68: WLCSP, 64-ball 4.466 × 4.395 mm, 0.500 mm pitch, wafer-level chip-scale package outline* – *Figure 48: I^2C bus AC waveforms and measurement circuit on page 97* – *Section 6.1: LFBGA144 package information* and *Section 6.2: LFBGA100 package information*. – *Table 20: Peripheral current consumption* Added: – *Figure 63: LFBGA144 – 144-ball low profile fine pitch ball grid array, 10 x 10 mm, 0.8 mm pitch, package recommended footprint* – *Figure 64: LFBGA144 marking example (package top view)* – *Figure 66: LFBGA100 – 100-ball low profile fine pitch ball grid array, 10 x 10 mm, 0.8 mm pitch, package recommended footprintoutline* – *Figure 69: WLCSP64 - 64-ball, 4.4757 x 4.4049 mm, 0.5 mm pitch wafer level chip scale package recommended footprint* – *Table 66: LFBGA144 recommended PCB design rules (0.8 mm pitch BGA)* – *Table 68: LFBGA100 recommended PCB design rules (0.8 mm pitch BGA)* – *Table 70: WLCSP64 recommended PCB design rules (0.5 mm pitch)*.
26-Nov-2015	12	Updated: – *Table 59: ADC characteristics* – *Table 65: LFBGA144 – 144-ball low profile fine pitch ball grid array, 10 x 10 mm, 0.8 mm pitch, package mechanical data* – *Table 66: LFBGA144 recommended PCB design rules (0.8 mm pitch BGA)* Added: – *Note 3* on *Table 7: Voltage characteristics*
10-Jul-2018	13	Updated: – *Table 2: STM32F103xC, STM32F103xD and STM32F103xE features and peripheral counts* – *Section 7: Ordering information*

IMPORTANT NOTICE – PLEASE READ CAREFULLY

STMicroelectronics NV and its subsidiaries (“ST”) reserve the right to make changes, corrections, enhancements, modifications, and improvements to ST products and/or to this document at any time without notice. Purchasers should obtain the latest relevant information on ST products before placing orders. ST products are sold pursuant to ST’s terms and conditions of sale in place at the time of order acknowledgement.

Purchasers are solely responsible for the choice, selection, and use of ST products and ST assumes no liability for application assistance or the design of Purchasers’ products.

No license, express or implied, to any intellectual property right is granted by ST herein.

Resale of ST products with provisions different from the information set forth herein shall void any warranty granted by ST for such product.

ST and the ST logo are trademarks of ST. All other product or service names are the property of their respective owners.

Information in this document supersedes and replaces information previously supplied in any prior versions of this document.

© 2018 STMicroelectronics – All rights reserved