AAT3672

1.6A Dynamic Battery Charger and Power Manager

General Description

The AAT3672 BatteryManager is a highly integrated single-cell (4.2V) lithium-ion/polymer battery charger and system power management IC that enables simultaneous battery charging and system load management.

The AAT3672 provides charging current and system power management from a single input that may be supplied by an AC adapter or USB port power source. This device allows the user to program the battery charge current up to 1.6A depending on the current shared with the system output. A battery charge timeout timer is provided for charging safety and the charge termination current is also user-programmable.

The AAT3672 employs a battery charge current reduction function that enables continued system operation in the event the input source can not supply the required load current. When operated under excessive thermal conditions, the AAT3672 has a digitally controlled thermal loop which allows the maximum possible charging current for any given ambient temperature condition.

Battery temperature, voltage and charge state are monitored for fault conditions. The AAT3672-1/-2 has two status monitor output pins ($\overline{STAT1}$ and $\overline{STAT2}$), and the AAT3672-3 has one status monitor output ($\overline{STAT1}$) provided to indicate battery charge status by directly driving external LEDs.

The AAT3672 is available in a Pb-free, thermally enhanced, space-saving 14-pin 3 × 3mm TDFN package.

Features

- System Load Power Control from Either ADP or Battery
- ADP Presence Automatically Routes Power from Source to Load and Charges Battery
- Automatic Charge Reduction Loop to Minimize Charge Time
- Digitally Controlled Thermal Protection
- Battery Power Enable
- Programmable Battery Charge Timer
- Battery Cell Temperature Sensing
- Charge Status Reporting (LEDs)
- Automatic Recharge Sequencing
- Battery Over-Voltage, Over-Current, and Over-Temperature Protection
- System Load Current Limiting
- 14-pin 3 × 3mm TDFN Package

Applications

- Cellular Phones
- Digital Still Cameras
- Digital Video Cameras
- Global Positioning Systems (GPS)
- MP3 Players
- Handheld PCs

Typical Application

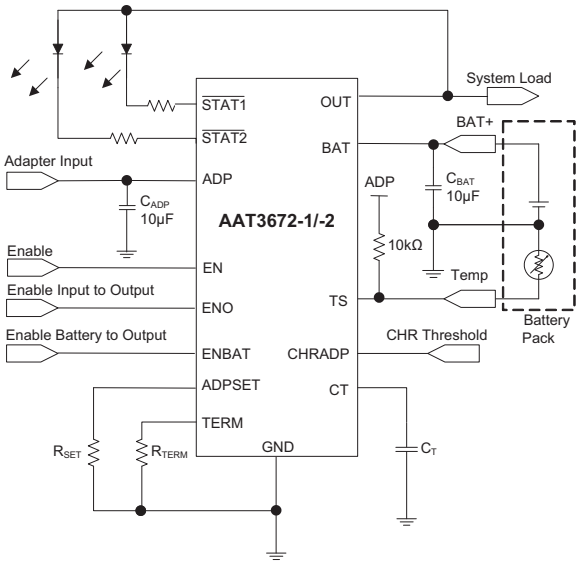

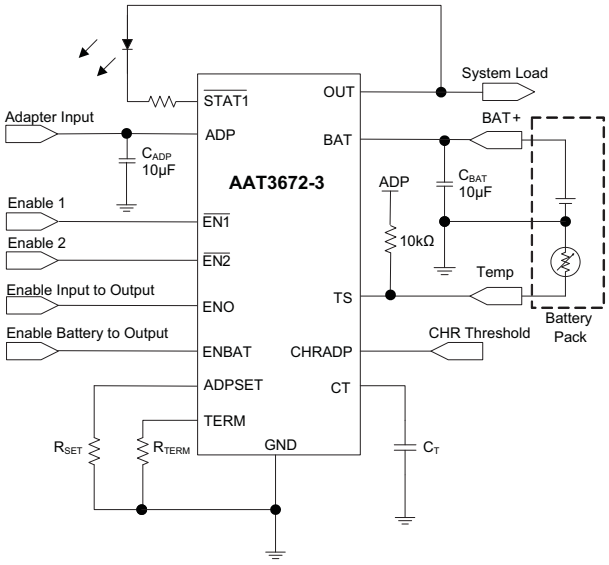

Pin Descriptions

Pin #	Name	Type	Function
1	ADPSET	I	Connect a resistor from this pin to GND set the ADP fast charge constant current. The programmed constant current level should be less than the ADP current limit set by ADPLIM specification (I_{LIM_ADP}).
2	ADP	I	Adapter input, source of system load and battery charging. Connect a 1µF (minimum) ceramic capacitor as close as possible between ADP and GND.
3	$\overline{STAT1}$	O	This open-drain MOSFET device is for charger status reporting. If used for status indication display, connect an LED Cathode to this node with a series ballast resistor. Connect the LED anode to OUT or ADP.
4	GND	I/O	Common ground connection.
5	$\overline{STAT2}$	O	AAT3672-1/-2: This open-drain MOSFET device is for charger status reporting. If used for status indication display, connect an LED cathode to this node with a series ballast resistor. Connect the LED anode to OUT or ADP.
	$\overline{EN2}$	I	AAT3672-3: The $\overline{EN2}$ pin (internal pull-down) is used together with the $\overline{EN1}$ pin; see Table 2 in the "Functional Description" section of this datasheet.
6	EN	I	AAT3672-1/-2: Input enable (internal pull-down). High to enable the ADP switch and battery charging path; low or floating to disable the ADP switch and battery charging function. See Table 1 in the "Functional Description" section of this datasheet.
	$\overline{EN1}$	I	AAT3672-3: This $\overline{EN1}$ pin (internal pull-down) is used together with the $\overline{EN2}$ pin; see Table 2 in the "Functional Description" section of this datasheet.
7	ENO	I	Enable Input power to OUT, the dynamic power path from the ADP input to the system load. Active high input (internal pull down).
8	ENBAT	I	Battery load switch enable, active high. Battery load switch control the power path between the battery cell and OUT (internal pull down).
9	CHRADP	I	Adaptor mode charge reduction voltage threshold programming pin. The ADP charge reduction threshold may be adjusted from the default value by placing a voltage divider between this pin to VADP and GND to this pin.
10	TERM	I	Connect a resistor between this pin and GND to program the charge termination current threshold. The charge termination current level can be disabled by connecting this pin to a logic high level.
11	TS	I	Battery temperature sensing input. For typical applications, connect a 10kΩ resistor from ADP to this pin and a 10kΩ NTC thermistor located inside the battery pack under charge to this pin and GND to sense battery over temperature conditions during the charge cycle. To disable the TS function, connect with a 10kΩ resistor between this pin and GND.
12	BAT	I/O	Battery pack (+) connection. For best operation, a 1µF (minimum) ceramic capacitor should be placed as close as possible between BAT and GND.
13	OUT	O	System dynamic power output supplied from the ADP input, BAT or both. Connect a 10µF capacitor between this pin and GND for best system stability. If the system load circuit contains a reasonable bulk capacitance, the output capacitor value may be reduced.
14	CT	I	Battery charge timer input pin, connect a capacitor on this pin to set the ADP charge timers. Typically, a 0.1µF ceramic capacitor is connected between this pin and GND. To disable the timer circuit function, connect this pin directly to GND.
EP	EP	I/O	Exposed paddle (package bottom). Connect to GND as closely to the device as possible.

Pin Configuration

TDFN33-14
(Top View)

AAT3672-1/2

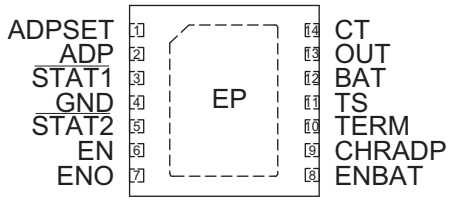

AAT3672-3

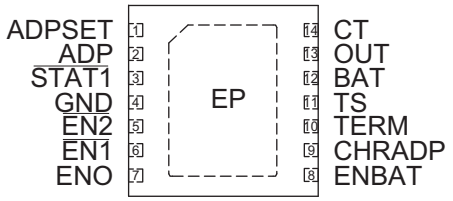

Absolute Maximum Ratings

Symbol	Description	Value	Units
V_P	ADP, BAT, OUT <30ms, Duty Cycle < 10%	-0.3 to 7.5	V
	EN/$\overline{EN1}$, ENO, ENBAT, $\overline{STAT1}$, $\overline{STAT2}$/$\overline{EN2}$	-0.3 to 7.5	
V_N	TS, CT, ADPSET, TERM, CHRADP	-0.3 to V_P + 0.3	
T_J	Junction Temperature Range	-40 to 150	°C
T_{LEAD}	Maximum Soldering Temperature (at Leads)	300	
T_A	Operating Temperature Range	-25 to 85	

Thermal Information[1, 2]

Symbol	Description	Value	Units
θ_{JA}	Maximum Thermal Resistance	50	°C/W
θ_{JC}	Maximum Thermal Resistance	37	
P_D	Maximum Power Dissipation	2.0	W

1. Mounted on 1.6mm thick FR4 circuit board.
2. Derate 50mW/°C above 25°C ambient temperature.

Electrical Characteristics[1]

V_{ADP} = 5V, T_A = -25°C to +85°C; unless otherwise noted, typical values are T_A = 25°C.

Symbol	Description	Conditions	Min	Typ	Max	Units
Operation						
V_{ADP}	AC Adapter Operating Voltage Range		4.0		6.5	V
V_{BAT}	Battery Operating Voltage Range		3.0		$V_{CO(REG)}$	
V_{UVLO_ADP}	ADP Under-Voltage Lockout	Rising Edge		3.4	3.9	
		Hysteresis		0.1		
V_{UVLO_BAT}	BAT Under-Voltage Lockout	Rising Edge	2.8	2.9	3.0	
		Hysteresis		0.1		
I_{ADP_OP}	ADP Normal Operating Current	$V_{ADP} = V_{EN}$ = 5V, I_{CC} = 1A		0.5	1	mA
$I_{ADP_SHDN1/2}$	ADP Shutdown Mode Current for AAT3672-1/-2	V_{ADP} = 5V, V_{EN} = 0V, V_{ENBAT} = 0V, No Load			1	µA
I_{ADP_SHDN3}	ADP Shutdown Mode Current for AAT3673-3	$V_{ADP} = V_{\overline{EN1}} = V_{\overline{EN2}}$ = 5V, V_{ENO} = 0V, V_{ENBAT} = 0V			5	
I_{BAT_OP}	Battery Operating Current	$V_{BAT} = V_{CO(REG)}$, V_{ADP} = GND, V_{USB} = GND, V_{ENBAT} = 5V, No Load		60	120	
I_{BAT_SLP}	Battery Sleep Current	$V_{BAT} = V_{CO(REG)}$, V_{ADP} = 5V, $V_{EN} = V_{ENBAT}$ = 5V		4	10	
I_{BAT_SHDN}	Leakage Current from BAT Pin	$V_{BAT} = V_{CO(REG)}$, V_{ENBAT} = 0V			1	
Power Switches						
$R_{DS(ON)_SWA}$	ADP-to-OUT FET On Resistance	V_{ADP} = 5.0V			600	mΩ
$R_{DS(ON)_SWB}$	BAT-to-OUT FET On Resistance	V_{BAT} = 4.1V		80		
$R_{DS(ON)_CHA}$	ADP Battery Charging FET On Resistance	V_{ADP} = 5.0V		600		
Battery Charge Voltage Regulation						
$V_{CO(REG)}$	Output Charge Voltage Regulation		4.158	4.20	4.242	V
V_{MIN}	Preconditioning Voltage Threshold		2.8	2.9	3.0	
V_{RCH}	Battery Recharge Voltage Threshold		$V_{CO(REG)}$ - 0.17	$V_{CO(REG)}$ - 0.1	$V_{CO(REG)}$ - 0.05	
V_{CHR_TH}	Default ADP Charge Reduction Threshold	CHRADP Open; Reduce Charge Current When ADP is Below V_{CHR_TH}		4.5		
V_{CHR_REG}	CHRADP and CHRUSB Pin Voltage Accuracy		1.9	2.0	2.1	
Current Regulation						
I_{LIM_ADP}	ADP Current Limit (Fixed)		1.6			A
I_{LIM_BAT}	BAT_OUT Current Limit (Fixed)		2.3			
$I_{CH_CC_ADP}$	ADP Charge Constant Current Charge Range		100		1600	mA
$\Delta I_{CH_CC}/I_{CH_CC}$	Constant Current Charge Current Regulation Tolerance	$I_{CH_CC_ADP}$ = 1A	-12		12	%
$I_{CH_TKL_ADP}$	ADP Charge Trickle Charge			10		% $I_{CH_CC_ADP}$
V_{ADPSET}	ADPSET Pin Voltage Regulation			2		V
V_{TERM}	TERM Pin Voltage Regulation			2		
$K_{I_CC_ADP}$	Constant Current Charge Current Set Factor: $I_{CH_CC_ADP}/I_{ADPSET}$			29300		
K_{I_TERM}	Termination Current Set Factor: I_{CH_TERM}/I_{TERM}			2000		
AAT3672-3 Only						
I_{CH_LO}	USB Low Level Charge Current (Fixed)	$V_{\overline{EN1}} = V_{\overline{EN2}}$ = 0	70	85	100	mA
I_{CH_HI}	USB High Level Charge Current (Fixed)	$V_{\overline{EN1}}$ = 0; $V_{\overline{EN2}}$ = 5V	400	450	500	

1. The AAT3672 is guaranteed to meet performance specifications over the -25°C to +85°C operating temperature range and is assured by design, characterization, and correlation with statistical process controls.

Electrical Characteristics (continued)[1]

V_{ADP} = 5V, T_A = -25°C to +85°C; unless otherwise noted, typical values are T_A = 25°C.

Symbol	Description	Conditions	Min	Typ	Max	Units
Logic Control/Protection						
V_{EN}	Input High Threshold		1.6			V
V_{EN}	Input Low Threshold				0.4	
$V_{\overline{STATx}}$	Output Low Voltage	$\overline{STATx}$ Pin Sinks 8mA			0.4	
T_C	Fast Charge (Trickle Charge + Constant Current + Constant Voltage Charges Together) Timeout	C_{CT} = 0.1µF			7	hour
T_{TKL}	Trickle Charge Timeout				T_C/8	
V_{BOVP}	Battery Over-Voltage Protection Threshold		$V_{CO(REG)}$ + 0.1	$V_{CO(REG)}$ + 0.15	$V_{CO(REG)}$ + 0.2	V
I_{OCP}	Battery Charge Over-Current Protection Threshold	In All Modes		100		% I_{CH_CC}
TS1	High Temperature Threshold		28	30	32	% V_{ADP}
TS2	Low Temperature Threshold		58	60	62	% V_{ADP}
T_{LOOP_IN}	Digital Thermal Loop Entry Threshold			115		ºC
T_{LOOP_OUT}	Digital Thermal Loop Exit Threshold			95		
T_{LOOP_REG}	Digital Thermal Loop Regulated Temperature			100		
T_{SHDN}	Chip Thermal Shutdown Temperature	Threshold		140		
		Hysteresis		15		

1. The AAT3672 is guaranteed to meet performance specifications over the -25°C to +85°C operating temperature range and is assured by design, characterization, and correlation with statistical process controls.

Typical Characteristics

Adapter Supply Operating Current vs. R_{SET}

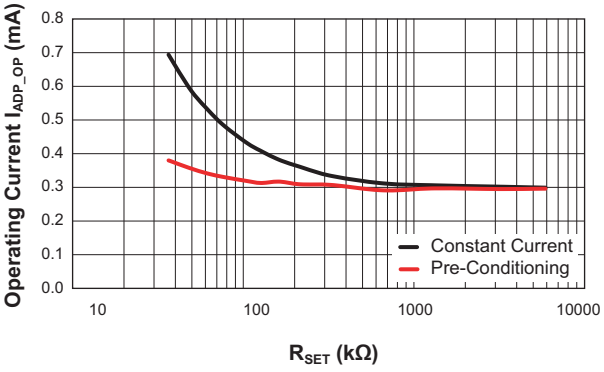

Constant Charge Current vs. R_{ADP}

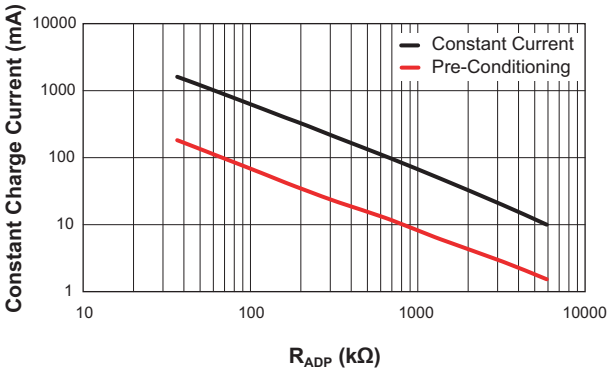

Output Charge Voltage Regulation Accuracy vs. Adapter Voltage

($V_{CO(REG)}$ = 4.2V)

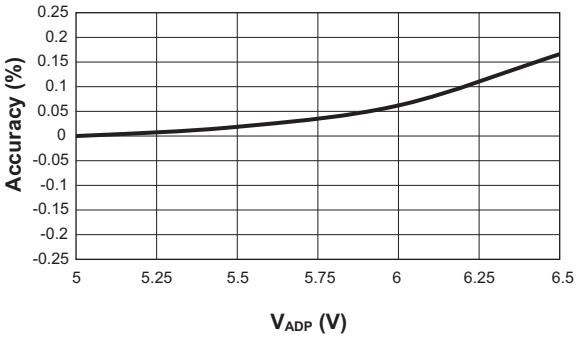

Output Charge Voltage vs. Temperature

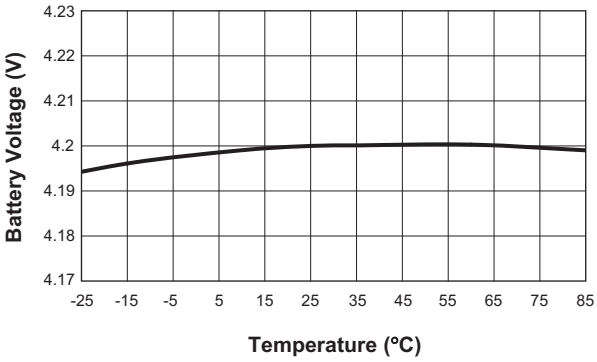

Battery Sleep Current vs. Temperature

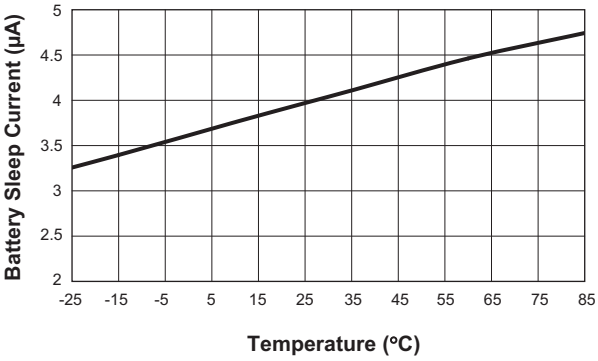

Operating Current vs. Temperature

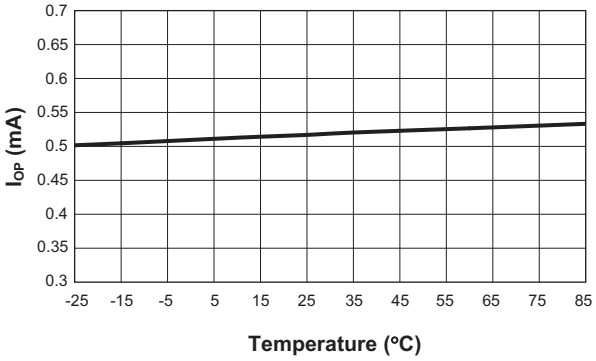

Typical Characteristics

Constant Charging Current vs. Adapter Voltage

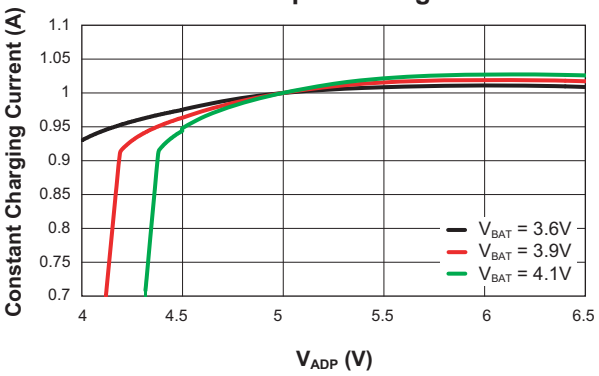

Recharge Voltage Threshold vs. Temperature
(V_{ADP} = 5V; R_{SET} = 56.7kΩ)

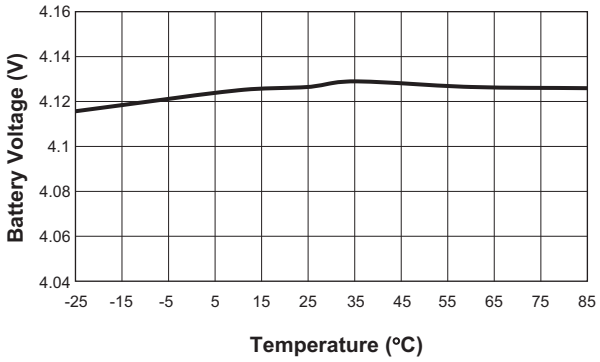

Constant Charge Current vs. Temperature

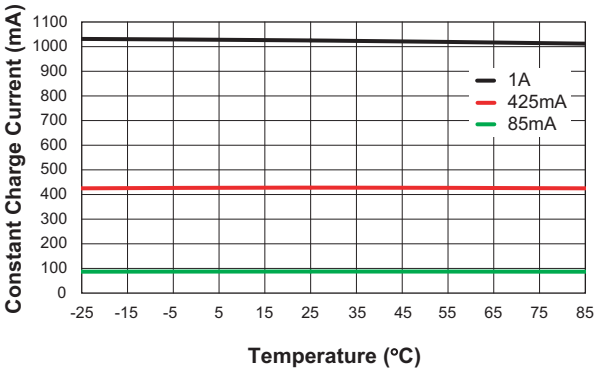

Constant Charge Current vs. Battery Voltage

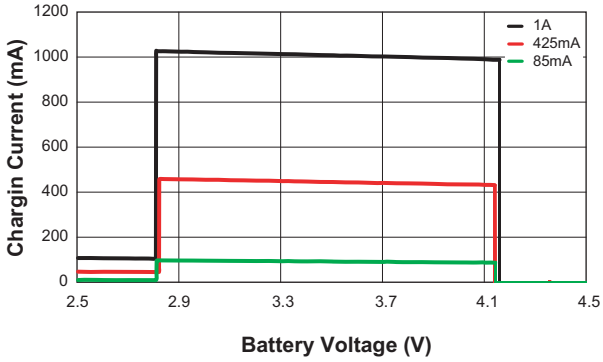

Preconditioning Voltage Threshold vs. Adapter Voltage

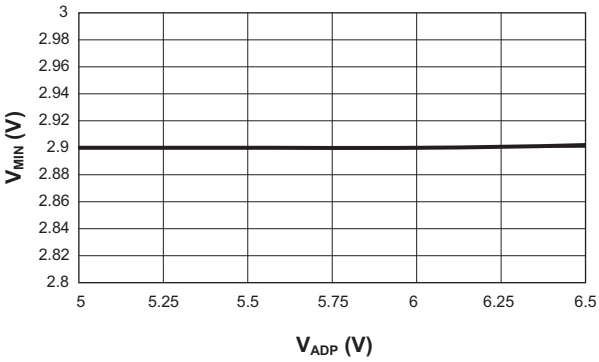

Preconditioning Voltage Threshold vs. Temperature

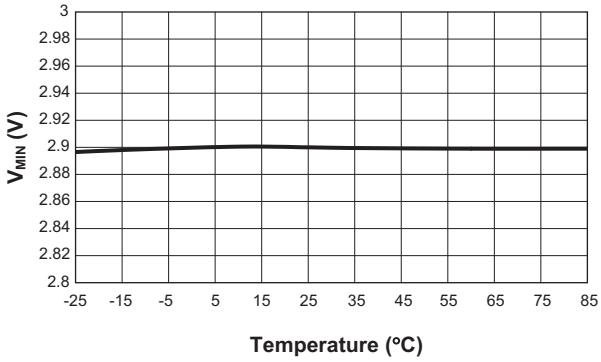

Typical Characteristics

Adapter and Charging Current vs. Output Current
(V_{ADP} = 5V; V_{BAT} = 3.6V; V_{ENO} = V_{ENBAT} = 5V)

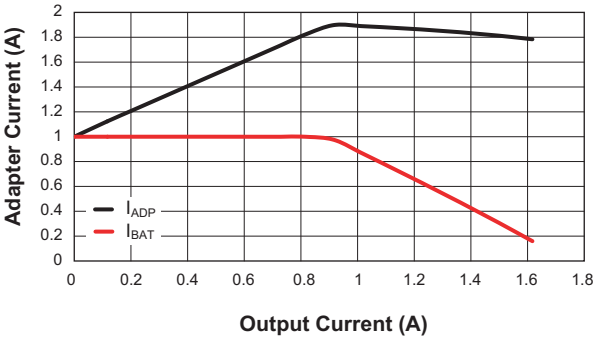

Adapter and Charging Current vs. Output Current
(V_{ADP} = 5V; V_{BAT} = 3.6V; V_{ENO} = V_{ENBAT} = 5V; AAT3672-3 $V_{\overline{EN1}}$ = $V_{\overline{EN2}}$ = 0V)

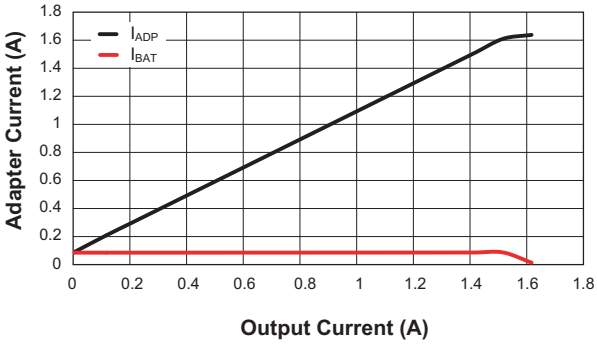

Adapter and Charging Current vs. Output Current
(V_{ADP} = 5V; V_{BAT} = 3.6V; V_{ENO} = V_{ENBAT} = 5V; AAT3672-3 $V_{\overline{EN1}}$ = 0V; $V_{\overline{EN2}}$ = 5V)

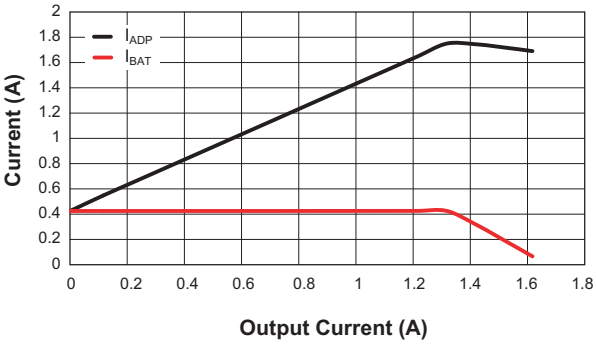

CT Pin Capacitance vs. Counter Timeout

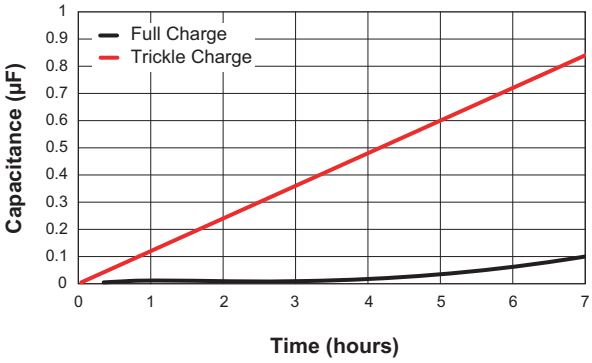

ADP Charge Current
(1A Charging Setting)

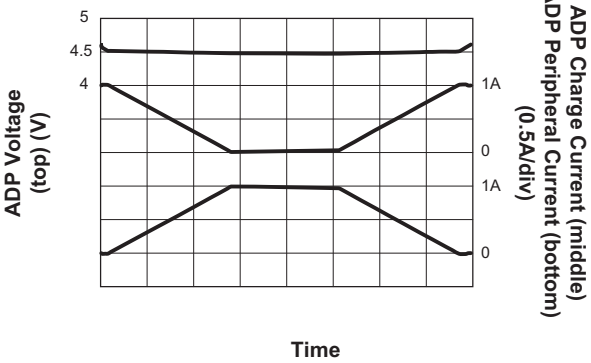

ADP Charge Current
(500mA Charging Setting)

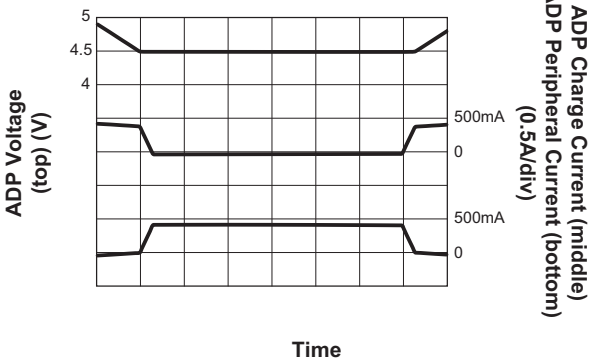

Typical Characteristics

Response of Out when Switching from V_{BAT} to V_{ADP}
(V_{ADP} = 0V→ 5V; V_{BAT} = 3.6V; R_{LOAD} = 50Ω)

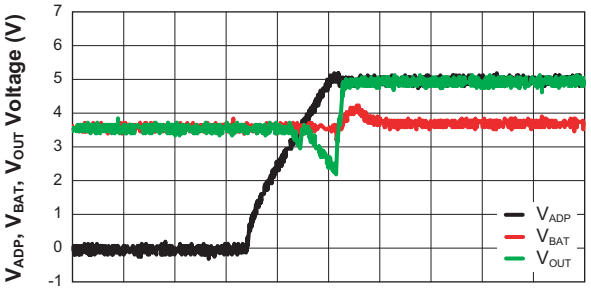

Response of Out when Switching from V_{ADP} to V_{BAT}
(V_{ADP} = 5V→ 0V; V_{BAT} = 3.6V; V_{ENBAT} = 5V; V_{ENO} = 5V; R_{LOAD} = 50Ω)

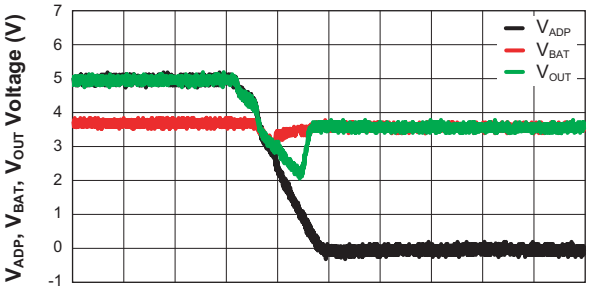

Response of Out when Switching from V_{BAT} to V_{ADP}
(V_{ADP} = 0V→ 5V; V_{BAT} = 3.6V; V_{ENBAT} = 0V; V_{ENO} = 5V; R_{LOAD} = 50Ω)

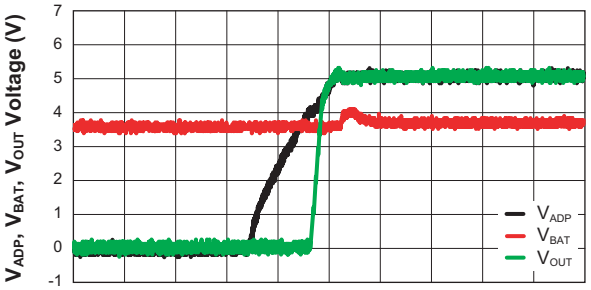

Response of Out when Switching from V_{ADP} to V_{BAT}
(V_{ADP} = 5V→ 0V; V_{BAT} = 3.6V; V_{ENBAT} = 0V; V_{ENO} = 5V; R_{LOAD} = 50Ω)

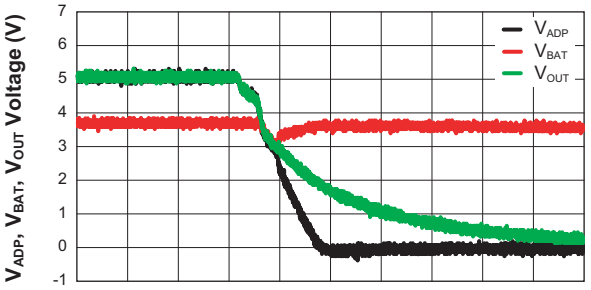

Response of Out when V_{ENO} = 0V
(V_{ADP} = 0V→ 5V; V_{BAT} = 3.6V; V_{ENBAT} = 5V; R_{LOAD} = 50Ω)

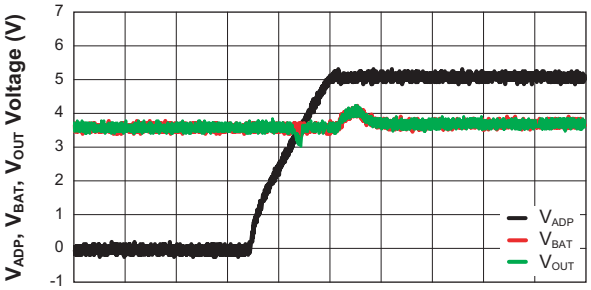

Response of Out when V_{ENO} = 0V
(V_{ADP} = 5V→ 0V; V_{BAT} = 3.6V; V_{ENBAT} = 5V; R_{LOAD} = 50Ω)

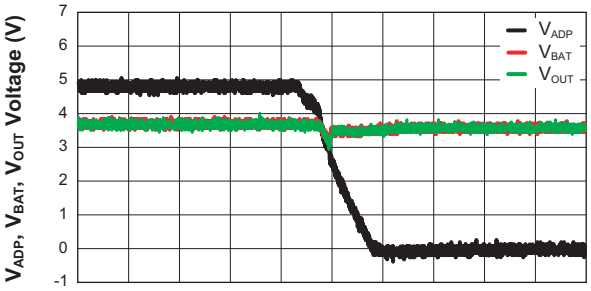

Typical Characteristics

Response of Out when V_{ENBAT} = 0V
(V_{BAT} = 0V→ 3.6V; V_{ADP} = 5V; V_{ENO} = 5V; R_{LOAD} = 50Ω)

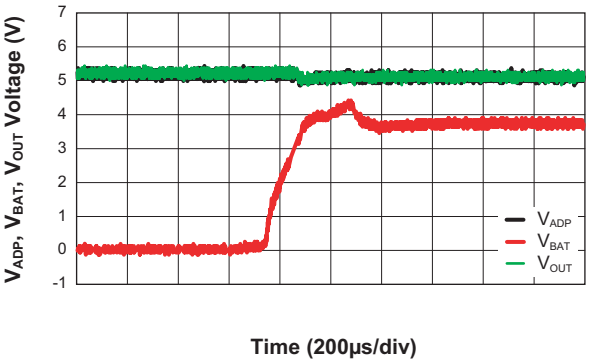

Response of Out when V_{ENBAT} = 0V
(V_{BAT} = 3.6V→ 0V; V_{ADP} = 5V; V_{ENO} = 5V; R_{LOAD} = 50Ω)

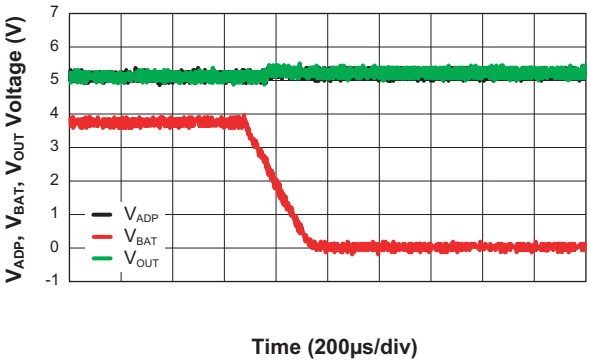

Response of Out when Inserting Battery
(V_{BAT} = 0V→ 3.6V; V_{ADP} = 5V; V_{ENBAT} = 5V; V_{ENO} = 0V; R_{LOAD} = 50Ω)

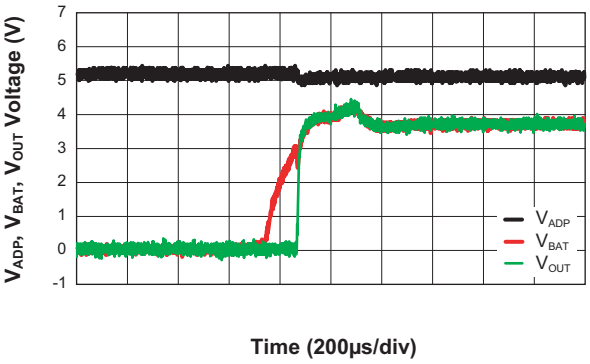

Response of Out when Removing Battery
(V_{BAT} = 3.6V→ 0V; V_{ADP} = 5V; V_{ENBAT} = 5V; V_{ENO} = 0V; R_{LOAD} = 50Ω)

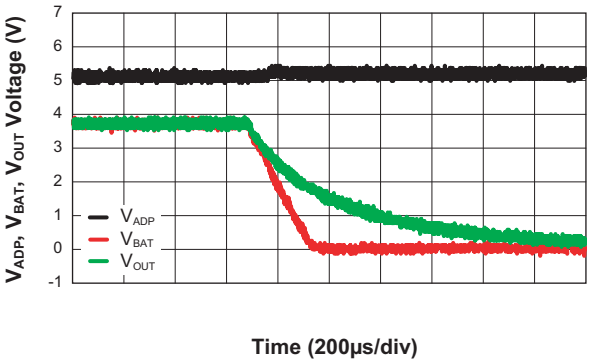

Input High Threshold vs. Adapter Voltage

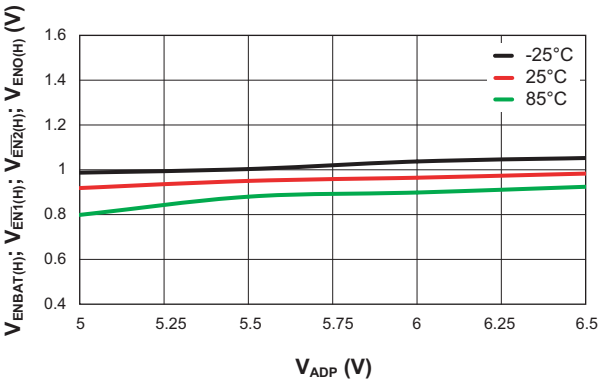

Input Low Threshold vs. Adapter Voltage

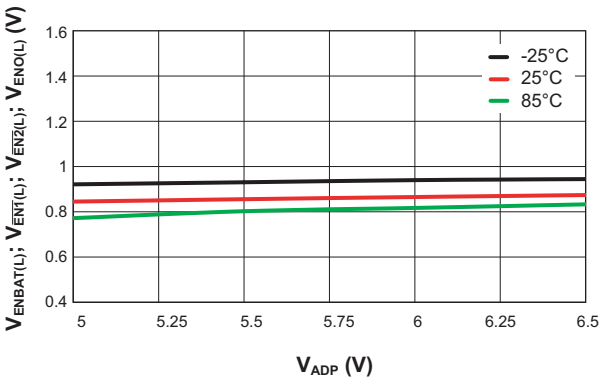

Typical Characteristics

High Temperature Threshold
(V_{ADP} = 5V)

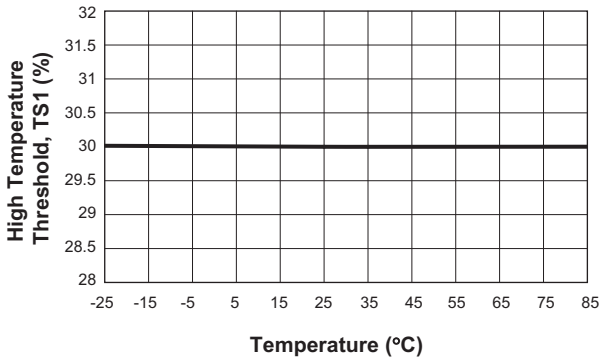

Low Temperature Threshold
(V_{ADP} = 5V)

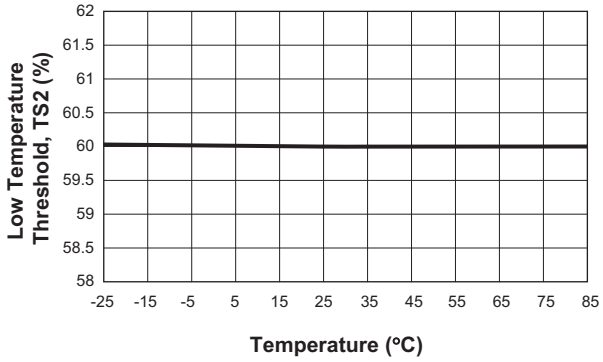

Functional Block Diagram

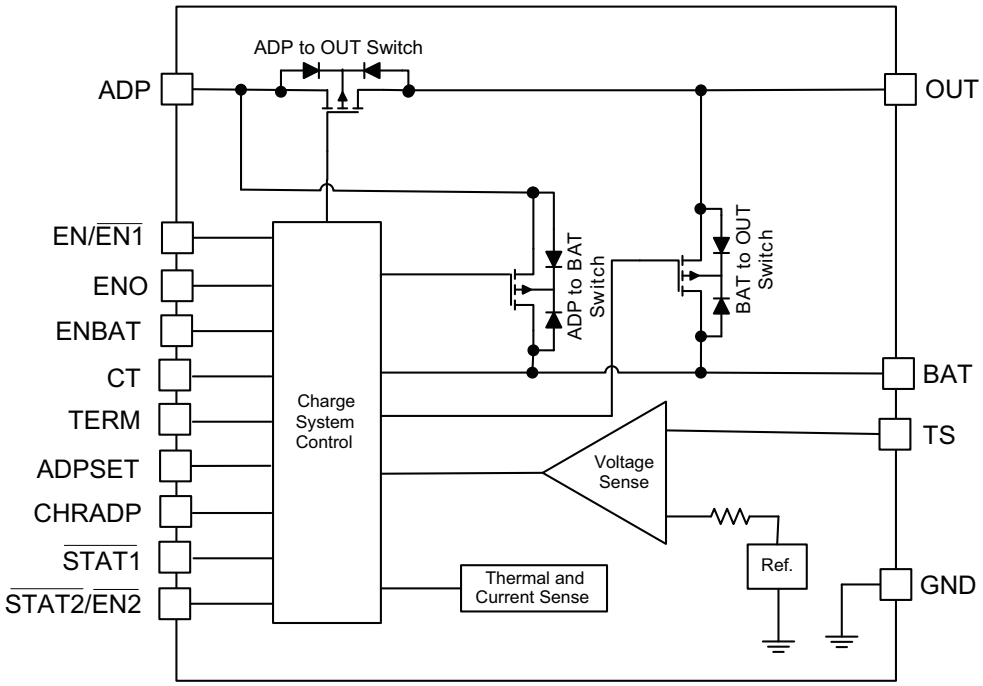

Functional Description

The AAT3672 is a single input dynamic battery charger and power control IC. The input power control is designed to be compatible with either AC power adapter or USB port power sources. In addition, this device also provides dynamic power control to charge a single cell Li-ion battery and power a system load simultaneously.

The device contains three pass devices to control the charge current or voltage from the adapter input power to the battery and system load. It also contains an additional load switch to control and manage power from the battery to the system load. This charge control and switch array permits dynamic charging of the battery cell and control of power to the system load simultaneously.

When an input power source is applied to the AAT3672, the adapter input will provide power to the system load and charge the battery. Without a valid supply present on the ADP pin, the battery will power the system load as long as the battery voltage is greater than 2.9V. The internal battery voltage sense circuit will disconnect the battery from the load if the cell voltage falls below 2.9V to protect the battery cell from over-discharge which results in shorter battery life.

The system load current drawn from the battery is limited internally. The AAT3672 precisely regulates battery charge current and voltage for 4.2V Li-ion battery cells. The battery charge current can be programmed up to 1.6A. During battery charge, the AAT3672 pre-conditions (trickle charge) the battery with a lower current when the battery voltage is less than 2.9V, the system then charges the battery in a constant current fast charge mode when the battery voltage is above 2.9V. When the battery voltage rises to 4.2V, the charger will automatically switch to a constant voltage mode until the charge current is reduced to the programmed charge termination current threshold.

The internal arrangement of load switches and the charge regulation device provide dynamic power sourcing to the system load. If the system load exceeds the input current supply from the input source, additional current can be supplied from the battery cell. At all times, the device will manage distribution of power between the source, the battery and the system simultaneously in order to support system power needs and charge the battery cell with the maximum amount of current possible. The AAT3672 has a unique internal charge current reduction loop control that will prevent an input source from overload. In the

case of USB charging from a USB port V_{USB} supply, there are two events which need to be guarded against. The first is charging from a defective or inadequate USB host supply; the second problem could arise if the programmed charge current plus the system supply demand through the AAT3672 exceeds the ability of a given USB port. In either case, the AAT3672 charge reduction (CHR) loop will activate when the input source drops below the V_{CHR_TH} threshold of 4.5V. The CHR loop will automatically reduce the charge current to the battery until the supply voltage recovers to a point above the V_{CHR_TH} threshold. This unique feature protects the charger, system and source supply in the event an adapter or power source does not meet the programmed ADP charging mode current demand. The resulting CHR system will permit the charging of a battery cell with the maximum possible amount of charge current for any given source fault condition.

During battery charging, the device temperature can rise due to power dissipation within the charge current control device and the load switches. In some cases, the power dissipation in the device may cause the junction temperature to rise up to its thermal shutdown threshold. In the event of an internal over-temperature condition caused by excessive ambient operating temperature or an excessive power dissipation condition, the AAT3672 utilizes a digitally controlled thermal loop system that will reduce the charging current to prevent the device from thermal shutdown. The digital thermal loop will maintain the maximum possible battery charging current for the given set of input to output power dissipation and ambient temperature conditions.

The digital thermal loop control is dynamic in the sense that it will continue to adjust the battery charging current as operating conditions change. The digital thermal loop will reset and resume normal operation when the power dissipation or over temperature conditions are removed.

Battery temperature and charge state are fully monitored for fault conditions. In the event of an over voltage, overcurrent, or over-temperature failure, the device will automatically shut down, thus protecting the charging device, control system, and the battery under charge. In addition to internal charge controller thermal protection, the AAT3672 also provides a temperature sense feedback function (TS pin) from the battery to shut down the device in the event the battery exceeds its own thermal limit during charging. All fault events are reported to the user by the simple status LED(s) which is (are) internally controlled by open drain NMOS switch(es).

Charging Operation

The AAT3672 has four basic modes for the battery charge cycle: pre-conditioning/trickle charge, constant current fast charge, constant voltage, and end of charge/sleep state.

Battery Preconditioning

Before the start of charging, the AAT3672 checks several conditions in order to assure a safe charging environment. The input supply must be above the minimum operating voltage, or under-voltage lockout threshold (V_{UVLO}), for the charging sequence to begin. Also, the cell temperature, as reported by a thermistor connected to the TS pin from the battery, must be within the proper window for safe charging. When these conditions have been met and a battery is connected to the BAT pin, the AAT3672 checks the state of the battery by sensing the cell voltage. If the cell voltage is below the preconditioning voltage threshold (V_{MIN}), the AAT3672 begins preconditioning the battery cell.

Fast Charge/Constant Current Charging

Battery cell preconditioning continues until the voltage measured by the internal sense circuit exceeds the preconditioning voltage threshold (V_{MIN}). At this point, the AAT3672 begins the fast charge constant current phase. The fast charge constant current (I_{CH_CC}) level is programmed by the user via the R_{SET} resistor. The AAT3672 remains in constant current charge mode until the battery reaches the voltage regulation point, $V_{CO(REG)}$. The formula for fast charge current as a function of current setting resistor is:

$$I_{CH_CC} = K_{I_CC_ADP} \cdot \left(\frac{2V}{R_{SET}}\right)$$

Alternately, to select the resistor value for a given charging current use:

$$R_{SET} = K_{I_CC_ADP} \cdot \left(\frac{2V}{I_{CH_CC}}\right)$$

where $K_{I_CC_ADP}$ = 29300 (typical).

Control Inputs			Pass Devices		
EN	ENO	ENBAT	ADP - OUT	ADP - BAT	BAT - OUT
0	0	0	OFF	OFF	OFF
1	0	0	OFF	ON	OFF
0	1	0	OFF	OFF	OFF
1	1	0	ON	ON	OFF
0	0	1	OFF	OFF	ON
1	0	1	OFF	ON	ON
0	1	1	OFF	OFF	ON
1	1	1	ON	ON	ON

Table 1: AAT3672-1 and AAT3672-2 Battery and Adapter Dynamic Path Control Table.

Control Inputs				Pass Devices		
EN1	EN2	ENO	ENBAT	ADP-OUT	ADP-BAT	BAT-OUT
1	1	0	0	OFF	OFF	OFF
0	0	0	0	OFF	ON	OFF
0	1	0	0	OFF	ON	OFF
1	0	0	0	OFF	ON	OFF
1	1	1	0	OFF	OFF	OFF
0	0	1	0	ON	ON	OFF
0	1	1	0	ON	ON	OFF
1	0	1	0	ON	ON	OFF
1	1	0	1	OFF	OFF	ON
0	0	0	1	OFF	ON	ON
0	1	0	1	OFF	ON	ON
1	0	0	1	OFF	ON	ON
1	1	1	1	OFF	OFF	ON
0	0	1	1	ON	ON	ON
0	1	1	1	ON	ON	ON
1	0	1	1	ON	ON	ON

Table 2: AAT3672-3 Battery and Adapter Dynamic Path Control Table.

Constant Voltage Charging

The charge control system transitions to a regulated constant voltage phase from the constant current fast charge mode when the battery voltage reaches the end of charge regulation threshold ($V_{CO(REG)}$). The regulation voltage level is factory programmed to 4.2V (±1%). The charge current in the constant voltage mode drops as the battery cell under charge reaches its maximum capacity.

End of Charge Cycle Termination and Recharge Sequence

When the charge current drops to the user programmed charge termination current at the end of the constant voltage charging phase, the device terminates charging, enables the recharge control circuit and enters the sleep state. The charger will remain in the sleep state until the battery voltage decreases to a level below the battery recharge voltage threshold (V_{RCH}). The charge termination current is programmed via the R_{TERM} resistor which is connected between the TERM pin and ground. Use the values listed in Table 3 to set the desired charge termination current. The programmed charge termination current will remain at the same set level regardless of which fast charge ADP, USBH or USBL constant current mode is selected.

If the desired end of charge termination current level is not listed in Table 3, the TERM resistor value may be calculated by the following equation:

$$I_{CH_TERM} = K_{I_TERM} \cdot \left(\frac{2V}{R_{TERM}}\right)$$

or

$$R_{TERM} = K_{I_TERM} \cdot \left(\frac{2V}{I_{CH_TERM}}\right)$$

K_{I_TERM} = 2000 (typical).

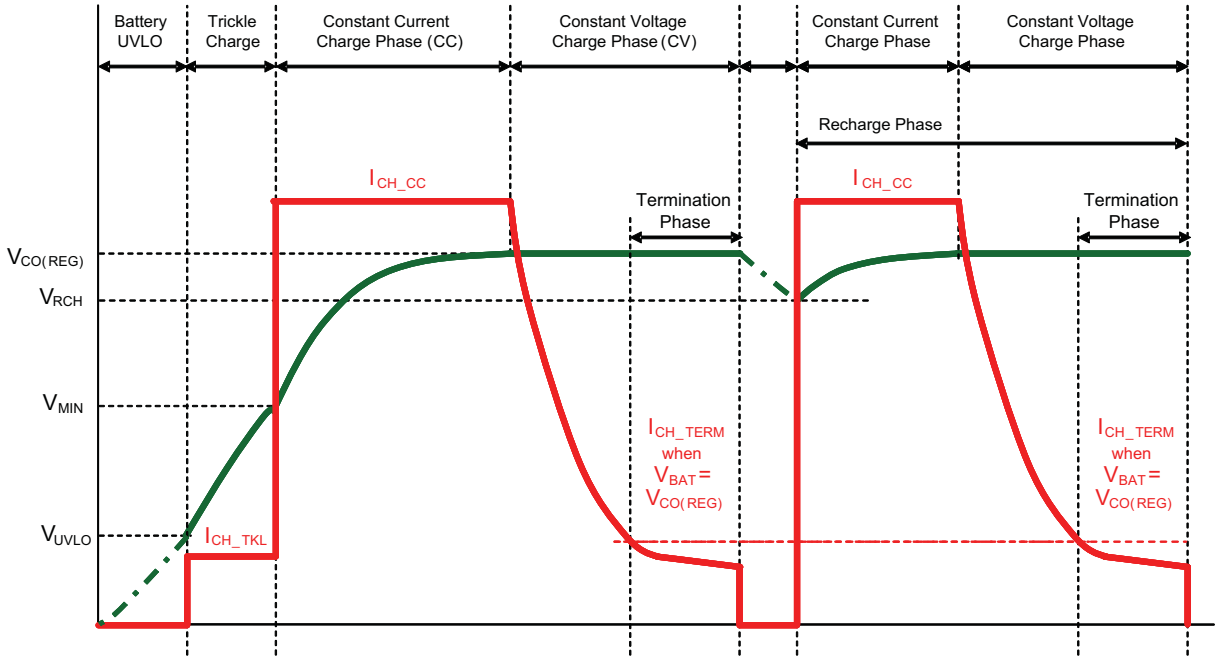

Figure 1: Current vs. Voltage and Charger Time Profile.

I_{TERM} (mA)	R_{TERM} (kΩ)
320	11.0
174	21.0
125	30.9
95	41.2
77	51.1
64	61.9
58	71.5
50	80.6
49	90.9
42	100.0
37	110.0

Table 3: Charge Termination Current Programming Resistor Values.

When the input supply is disconnected, the charger also automatically enters power-saving sleep mode. Consuming less than 1µA in sleep mode, the AAT3672 minimizes battery drain when not charging. This feature is particularly useful in applications where the input supply level may fall below the usable range of the charge reduction control or under-voltage lockout level. In such cases where the AAT3672 input voltage drops, the device will enter the sleep mode and automatically resume charging once the input supply has recovered from its fault condition.

When the input supply is disconnected, the charger also automatically enters power-saving sleep mode. Only consuming less than 1µA in sleep mode, the AAT3672 minimizes battery drain when not charging. This feature is particularly useful in applications where the input supply level may fall below the usable range of the charge reduction control or under-voltage lockout level. In such cases where the AAT3672 input voltage drops, the device will enter the sleep mode and automatically resume charging once the input supply has recovered from its fault condition.

Dynamic Current Regulation

There are two possible configurations where the system load current and charge current are dynamically controlled. In the first case, the ADP-BAT switch and the BAT-OUT switch are enabled, and the ADP-OUT switch is disabled. Under this condition, the adapter input current is set by the R_{SET} resistor (fast charge current setting, I_{CH_CC}) and is split between the system load ($I_{BAT-OUT}$) and the battery charge current (I_{BAT}). The charge current is dynamically adjusted as the system load

varies in order to maintain the adapter input current.

$$I_{CH_CC} = I_{BAT} + I_{BAT\text{-}OUT}$$

For example: If R_{SET} = 57.6kΩ, the fast charge current is set for 1A. For a system load of 0mA, the battery charge current is 1A. As the system load is increased the battery charge current is reduced, until the system load is equal to 1A and the battery charge current is 0A. Further increases in the system load will result in the battery supplying the balance of the current; a system load of 1.2A requires the battery to supply 0.2A.

In the second case, the ADP-BAT switch, the BAT-OUT switch and the ADP-OUT switch are all enabled. Under this condition, the adapter input current is limited internally to 1.6A minimum (I_{LIM_ADP}) and is split between the system load ($I_{ADP\text{-}OUT}$) and the battery charge current (I_{CH_CC}). The charge current is dynamically adjusted as the system load varies in order to maintain the adapter input current at or below the 1.6A minimum.

$$I_{LIM_ADP} \geq I_{CH_CC} + I_{ADP\text{-}OUT}$$

For example: If R_{SET} = 57.6kΩ, the fast charge current is set for 1A. For a system load of 0mA, the battery charge current is 1A and the adapter current is less than 1.6A. As the system load is increased the battery charge current is 1A, until the system load is equal to 0.6A and the adapter input current is 1.6A. Increasing the system load above 0.6A causes the battery charge current to be reduced, until the system load is equal to 1.6A and the battery charge current is 0A. Further increases in the system load will result in the battery supplying the balance of the current; a system load of 1.8A requires the battery to supply 0.2A.

Temperature Sense (TS)

Inside the AAT3672, the internal battery temperature sensing system is comprised of two comparators which establish a voltage window for safe operation. The thresholds for the TS operating window are bounded by the TS1 and TS2 specifications. Referring to the electrical characteristics table in this datasheet, the TS1 threshold = 0.30 · V_{ADP} and the TS2 threshold = 0.60 · V_{ADP}. If the use of the TS pin function is not required by the system, it should be terminated to ground using a 10kΩ resistor.

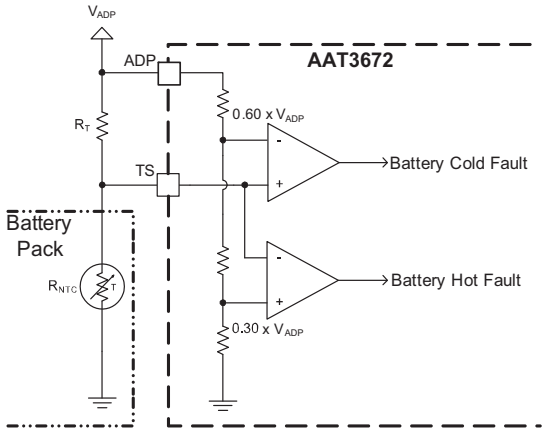

Figure 2: AAT3672 Battery Temperature Sense Circuit.

Charge Safety Timer (CT)

While monitoring the charge cycle, the AAT3672 utilizes a charge safety timer to help identify damaged cells and to ensure that the cell is charged safely. Operation is as follows: upon initiating a charging cycle, the AAT3672 charges the cell at 10% of the programmed maximum charge until V_{BAT} >2.9V. If the cell voltage fails to the precondition threshold of 2.9V (typ) before the safety timer expires, the cell is assumed to be damaged and the charge cycle terminates. If the cell voltage exceeds 2.9V prior to the expiration of the timer, the charge cycle proceeds into fast charge. There are two timeout periods: about 50 minutes for Trickle Charge mode, 6 hours for Constant Current (CC) mode and Constant Voltage (CV) mode altogether.

The timeout is 7 hours (typical) for a C_T = 100nF capacitor. Timeout is directly proportional to capacitor value, so for a 200nF capacitor it would be 14 hours, and for a 50nF capacitor it would be 3.5 hours.

For a given target delay time T_D (in hours) calculate:

$$C_T = \frac{(T_D \cdot 100nF)}{7}$$

The CT pin is driven by a constant current source and provides a linear response to increases in the timing capacitor value.

If the programmable watchdog timer function is not needed, it can be disabled by terminating the CT pin to ground. The CT pin should not be left floating or unterminated, as this will cause errors in the internal timing

control circuit. The constant current provided to charge the timing capacitor is very small, and this pin is susceptible to noise and changes in capacitance value. Therefore, the timing capacitor should be physically located on the printed circuit board layout as close as possible to the CT pin. Since the accuracy of the internal timer is dominated by the capacitance value, a 10% tolerance or better ceramic capacitor is recommended. Ceramic capacitor materials, such as X7R and X5R types, are a good choice for this application.

System Operation Flowchart

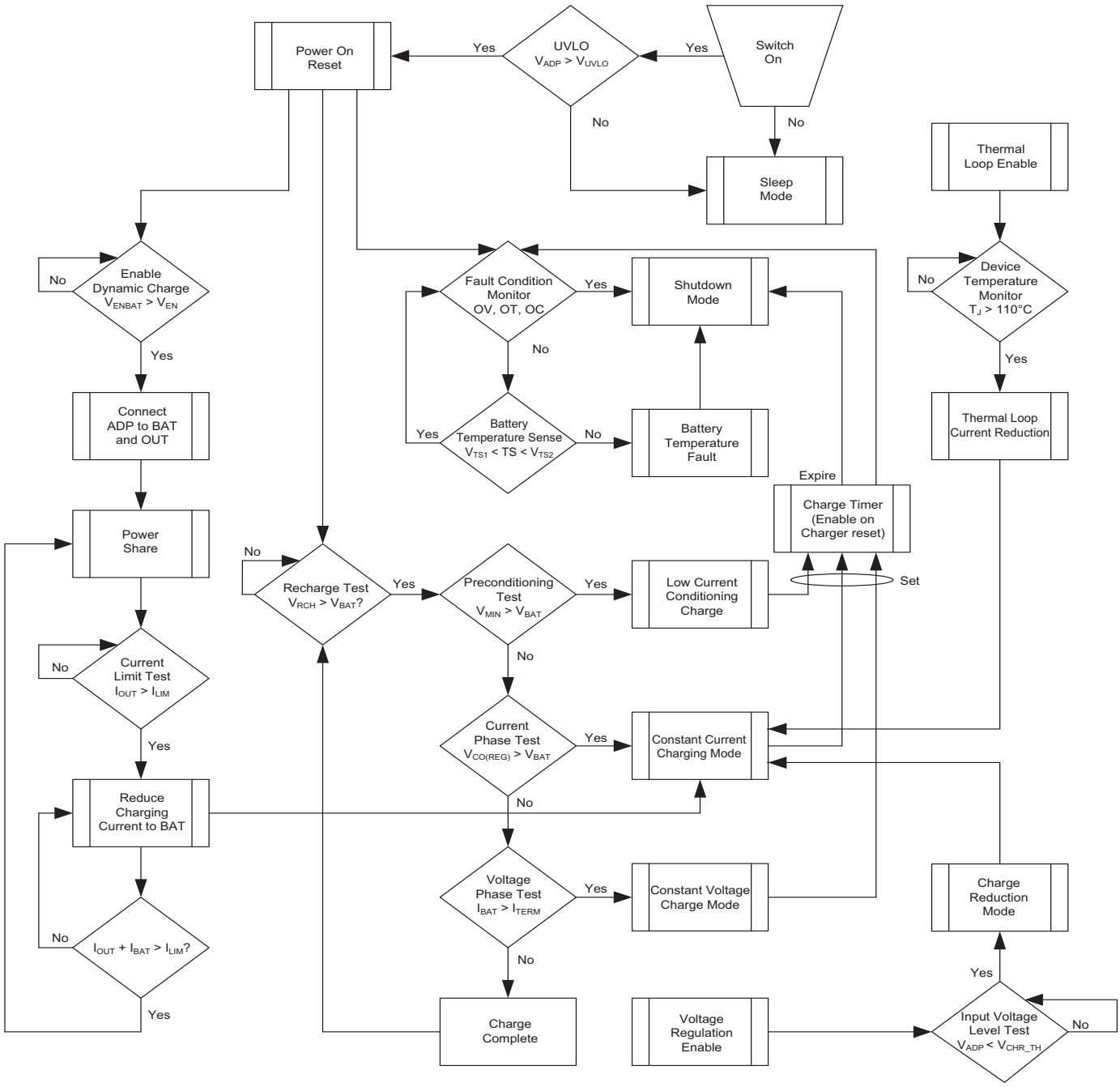

Applications Information

Adapter or USB Port Power Source

In the adapter mode, constant current charge levels up to 1.6A may be programmed by the user. The ADP input will operate over a range from 4.35V to 5.5V.

The constant fast charge current for the adapter input mode is set by the R_{SET} resistor connected between the ADPSET pin and ground. The battery preconditioning or trickle charge current is fixed at 10% of the programmed fast charge constant current level. Refer to Table 3 for recommended R_{SET} values for a desired constant current charge level. Battery charging states will be indicated via the $\overline{STAT1}$ and $\overline{STAT2}$ display LEDs for the AAT3672-1 and -2, and via $\overline{STAT1}$ for the AAT3672-3. Please refer to the Battery Charge Status Indication discussion on page 19 of this datasheet for further details.

Charge Reduction

Under normal operation, the AAT3672 should be operated from an adapter power source with a sufficient capacity to supply the desired constant charge current plus any additional load which may be placed on the source by the operating system. In the event that the power source to the ADP pin is unable to provide the programmed fast charge constant current, or if the system under charge must also share supply current with other functions, the AAT3672 will automatically reduce the ADP fast charge current level to maintain the integrity of the source supply, power the operating system, and charge the battery cell with the remaining available current.

The ADP charge reduction system becomes active when the voltage on the ADP input falls below the ADP charge reduction threshold (V_{CHR_TH}), which is preset to 4.5V. Should the input supply drop below the V_{CHR_TH} threshold, the charge reduction system will reduce the fast charge current level in a linear fashion until the voltage sensed on the ADP input recovers to a point above the charge reduction threshold voltage. The ADP charge reduction threshold (V_{CHR_TH}) may be externally set to a value other than 4.5V by placing a resistor divider network between the ADP pin and ground with the center connected to the CHRADP pin. The ADP charge reduction feature may be disabled by shorting the CHRADP pin directly to the ADP input pin.

The following equation may be used to approximate the ADP charge reduction threshold above or below 4.5V:

$$V_{CHR_TH} = \frac{2.0V}{(R4/[R4 + R3])}$$

where R4 and R3 < 500kΩ.

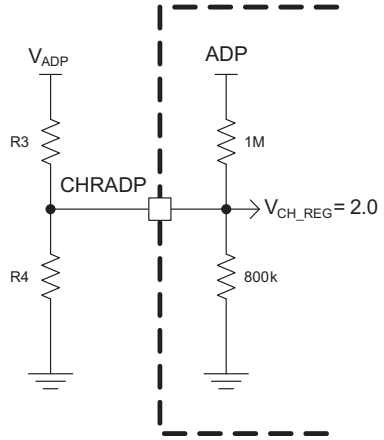

Figure 3: Internal Equivalent Circuit for the CHRADP Pin.

Adapter Input Charge Inhibit and Resume

The AAT3672 has an under-voltage lockout (UVLO) and power on reset feature to protect the charger IC in the event the input supply to the adapter pin drops below the UVLO threshold. Under a UVLO condition, the charger will suspend the charging process. When power is re-applied to the adapter pin or the UVLO condition recovers, the system charge control will asses the state of charge on the battery cell and will automatically resume charging in the appropriate mode for the condition of the battery.

Programming Fast Charge Current

The constant current charge level is user programmed with a set resistor connected between the ADPSET pin and ground. The accuracy of the constant charge current, as well as the preconditioning trickle charge current, is dominated by the tolerance of the set resistor used. For this reason, a 1% tolerance metal film resistor is recommended for the set resistor function. The constant charge current levels from 100mA to 1.6A may be set by selecting the appropriate value from Table 3.

Charge current setting formula:

$$I_{CH_CC_ADP}\ (typ) = \frac{V_{ADP}}{R_{SET}} \cdot KI_{I_CC_ADP}$$

Constant Charge Current (mA)	Set Resistor Value (kΩ)
100	665
200	324
300	215
400	162
500	127
800	76.8
1000	57.6
1600	36.5

Table 3: R_{SET} Values.

For the AAT3672-3, the two enable inputs select between four possible operating modes: two internally fixed charging current modes (USB Low =100mA or USB high = 500mA), an externally programmable charging current mode, and a shutdown mode. The STAT1 functionality is identical for all three options.

$\overline{EN1}$	$\overline{EN2}$	Operating Mode
0	0	USB Low, 100mA charging current
0	1	USB High, 500mA charging current
1	0	Using R_{ADP} to program charging current
1	1	Shutdown mode

Table 4: AAT3672-3 Operating Modes.

Figure 4 shows the relationship of constant charging current and set resistor values for the AAT3672.

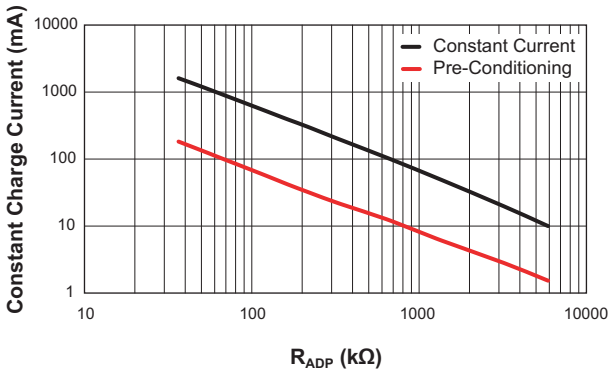

Figure 4: Constant Charging Current vs. Set Resistor Values.

Battery Connection (BAT)

A single cell Li-Ion/Polymer battery should be connected between BAT input and ground.

Battery Charge Status Indication

Charge Status Indicator Outputs

There are three device options. All options include recharge sequence after adapter is inserted. The AAT3672-1 and AAT3672-2 have two status ($\overline{STAT1}$ and $\overline{STAT2}$) pins and one enable pin (EN); the AAT3672-3 has one status pin ($\overline{STAT1}$) and two enable pins ($\overline{EN1}$ and $\overline{EN2}$)

Charge State	$\overline{STAT1}$	$\overline{STAT2}$
Pre-Charge	ON	ON
Fast-Charge	ON	OFF
End of Charge (Charge complete)	OFF	ON
Charge Disabled, Sleep Mode or Fault Condition	OFF	OFF
No Battery (with Charge Enabled)	Flash (1Hz, 40% duty)	Flash (1Hz, 40% duty)

Table 5: AAT3672-1 LED Status Indicators.

Charge State	$\overline{STAT1}$	$\overline{STAT2}$
Pre-Charge or Fast-Charge	ON	OFF
End of Charge (Charge Complete, Charge Disabled, or Sleep Mode)	OFF	OFF
Fault Condition	OFF	ON
No Battery (with Charge Enabled)	Flash (1Hz, 40% duty)	OFF

Table 6: AAT3672-2 LED Status Indicators.

Charge State	$\overline{STAT1}$
Pre-Charge or Fast-Charge	ON
End of Charge (Charge Complete, Charge Disabled, Sleep Mode, or Fault Condition)	OFF
No Battery (with Charge Enabled)	Flash (1Hz, 40% duty)

Table 7: AAT3672-3 LED Status Indicators.

Fault condition can be one of the following:

- Battery over-voltage (OV)
- Battery temperature sense hot or cold
- Battery charge timer time-out
- Chip thermal shutdown

Status Indicator Display

Simple system charging status states can be displayed using one LED each in conjunction with the $\overline{STAT1}$ and $\overline{STAT2}$ pins of the AAT3672-1/-2 and the $\overline{STAT1}$ pin of the AAT3672-3. These pins have simple switches connecting the LED's cathodes to ground. Refer to Tables 5, 6, and 7 for LED display definitions. The LED anodes should be connected to V_{ADP}, depending upon system design requirements. The LED should be biased with as little current as necessary to create reasonable illumination; therefore, a ballast resistor should be placed between the LED cathode and the $\overline{STAT1}$ and $\overline{STAT2}$ pins of the AAT3672-1/-2 and the $\overline{STAT1}$ pin of the AAT3672-3. A 2mA bias current should be sufficient to drive most low cost green or red LEDs. It is not recommended to exceed 8mA when driving an individual status LED.

The required ballast resistor value can be estimated using the following formulas:

When connecting to the adapter supply with a red LED:

$$R_{B(\overline{STAT1,2})} = \frac{V_{ADP} - V_{FLED}}{I_{LED(\overline{STAT1,2})}}$$

Example:

$$R_{B(\overline{STAT1,2})} = \frac{5.5V - 2.0V}{2mA} = 1.75k\Omega$$

Red LED forward voltage (V_F) is typically 2.0V @ 2mA.

When connecting to the USB supply with a green LED:

$$R_{B(\overline{STAT1,2})} = \frac{V_{USB} - V_{FLED}}{I_{LED(\overline{STAT1,2})}}$$

Example:

$$R_{B(\overline{STAT1,2})} = \frac{5.0V - 3.2V}{2mA} = 900\Omega$$

Green LED forward voltage (V_F) is typically 3.2V @ 2mA.

Protection Circuitry

Thermal Loop Control

Due to the integrated nature of the linear charging control pass devices for both the adapter and USB modes, a special thermal loop control system has been employed to maximize charging current under all operating conditions.

The thermal management system measures the internal circuit die temperature and reduces the charge current when the device exceeds a preset internal temperature control threshold. Once the thermal loop control becomes active, the constant charge current is initially reduced by a factor of 0.44.

The initial thermal loop current can be estimated by the following equation:

$$\text{Constant Charging: } I_{TLOOP} = I_{CCADP} \cdot 0.44$$

The thermal loop control re-evaluates the internal die temperature every three seconds and adjusts the fast charge current back up in small steps up to the full fast charge current level or until an equilibrium current is discovered and maximized for the given ambient temperature condition. In this manner, the thermal loop controls the system charge level. The AAT3672 will always provide the highest possible level of constant current in the fast charge mode for any given ambient temperature condition.

Programmable Watchdog Timer

The AAT3672 contains a watchdog timing circuit which operates in all charging modes. Typically a 0.1µF ceramic capacitor is connected between the CT pin and ground. When a 0.1µF ceramic capacitor is used, the device will time a shutdown condition if the trickle charge mode exceeds 50 minutes. When the device transitions to the trickle charge to the fast charge constant current mode and then to the constant voltage mode, the timing counter is reset and will time out after 6 hours.

Summary for a 0.1µF used for the timing capacitor:

Trickle Charge (TC) time out = 50 minutes
Fast Charge Constant Current (CC) + Constant Voltage (VC) mode time out = 6 hours

The CT pin is driven by a constant current source and will provide a linear response to increases in the timing capacitor value. Thus, if the timing capacitor were to be doubled from the nominal 0.1µF value, the time out time of the CC + CV modes would be doubled. The corresponding trickle charge time out time would be the combined CC + VC time divided by 8.

If the programmable watchdog timer function is not needed it may be disabled the terminating the CT pin to ground. The CT pin should not be left floating or not terminated; this will cause errors in the internal timing control circuit.

The charge timer control will suspend the timing count in any given mode in the event a fault condition occurs. Such fault conditions include digital thermal loop charge current reduction, battery charge reduction, battery tem-

perature fault, and battery current sharing with the output during the charging cycle. When the fault condition recovers, the counter will resume the timing function.

The charge timer will automatically reset when the AAT3672 enable pin is reset or cycled off and on. The constant current provided to charge the timing capacitor is very small and this pin is susceptible to noise and changes in capacitance value. Therefore, the timing capacitor should be physically located on the printed circuit board layout as close as possible to the CT pin. Since the accuracy of the internal timer is determined by the capacitance value, a 10% tolerance or better ceramic capacitor is recommended. Ceramic capacitor materials such as X7R and X5R type are a good choice for this application.

Battery Over-Voltage Protection

An over-voltage event is defined as a condition where the voltage on the BAT pin exceeds the maximum battery charge voltage and is set by the over-voltage protection threshold (V_{BOVP}). If an over-voltage condition occurs, the AAT3672 charge control will shutdown the device until voltage on the BAT pin drops below the over-voltage protection threshold (V_{BOVP}). The AAT3672 will resume normal charging operation once the battery over-voltage condition is removed.

Over-Temperature Shutdown

The AAT3672 has a thermal protection control circuit which will shut down charging functions should the internal die temperature exceed the preset thermal limit threshold.

Battery Temperature Fault Monitoring

In the event of a battery over-temperature condition, the charge control will turn off the internal charge path regulation device and disable the BAT-OUT dynamic path. After the system recovers from a temperature fault, the device will resume charging operation. The AAT3672 checks battery temperature before starting the charge cycle, as well as during all stages of charging. Typically, batteries employ the use of a negative temperature coefficient (NTC) thermistor that is integrated into the battery.

Capacitor Selection

Input Capacitor

A 1μF or larger capacitor is typically recommended for C_{ADP}. C_{ADP} should be located as close to the device ADP pin as practically possible. Ceramic, tantalum, or aluminum electrolytic capacitors may be selected for C_{ADP}. There is no specific capacitor equivalent series resistance (ESR) requirement for C_{ADP}. However, for higher current operation, ceramic capacitors are recommended for C_{ADP} due to their inherent capability over tantalum capacitors to withstand input current surges from low impedance sources such as batteries in portable devices.

Typically, 50V rated capacitors are required for most of the application to prevent any surge voltage. Ceramic capacitors selected as small as 1206 are available which can meet these requirements. Other voltage rating capacitor can also be used for the known input voltage application.

Charger Output Capacitor

The AAT3672 only requires a 1μF ceramic capacitor on the BAT pin to maintain circuit stability. This value should be increased to 10μF or more if the battery connection is made any distance from the charger output.

System Power Output Capacitor

For proper load voltage regulation and operational stability, a capacitor is required between OUT and GND. The output capacitor connection to the ground pin should be made as directly as practically possible for maximum device performance. Since the regulator has been designed to function with very low ESR capacitors, ceramic capacitors in the 1.0μF to 10μF range are recommended or best performance. Applications utilizing the exceptionally low output noise and optimum power supply ripple rejection of the AAT3672 should use 2.2μF or greater values for the system power output capacitor.

Printed Circuit Board Layout Recommendations

For proper thermal management and to take advantage of the low $R_{DS(ON)}$ of the AAT3672, a few circuit board layout rules should be followed: IN and BAT should be routed using wider than normal traces, and GND should be connected to a ground plane. To maximize package thermal dissipation and power handling capacity of the AAT3672 TDFN33 package, solder the exposed paddle of the IC onto the thermal landing of the PCB, where the thermal landing is connected to the ground plane. If heat is still an issue, multi-layer boards with dedicated ground planes are recommended. Also, adding more thermal vias on the thermal landing would help transfer heat to the PCB effectively.

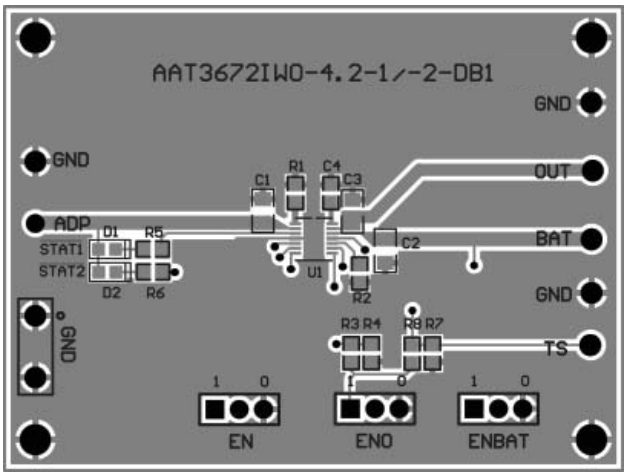

Figure 4: AAT3672-1/-2 Evaluation Board Top Layer.

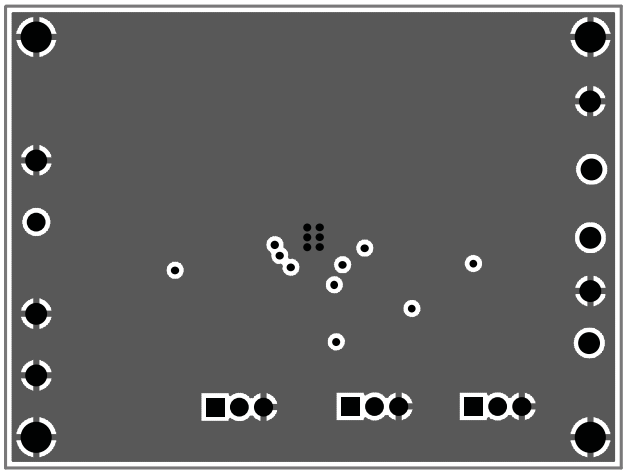

Figure 5: AAT3672-1/-2 Evaluation Board Mid1 Layer.

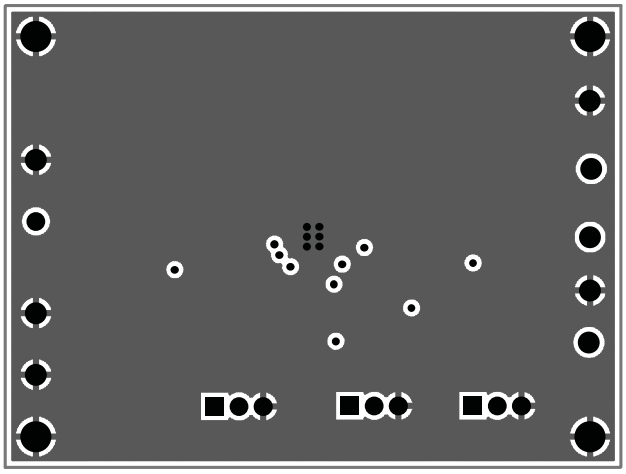

Figure 6: AAT3672-1/-2 Evaluation Board Mid2 Layer.

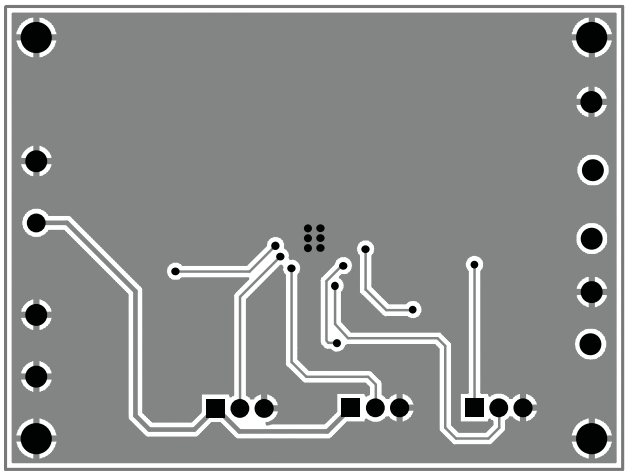

Figure 7: AAT3672-1/-2 Evaluation Board Bottom Layer.

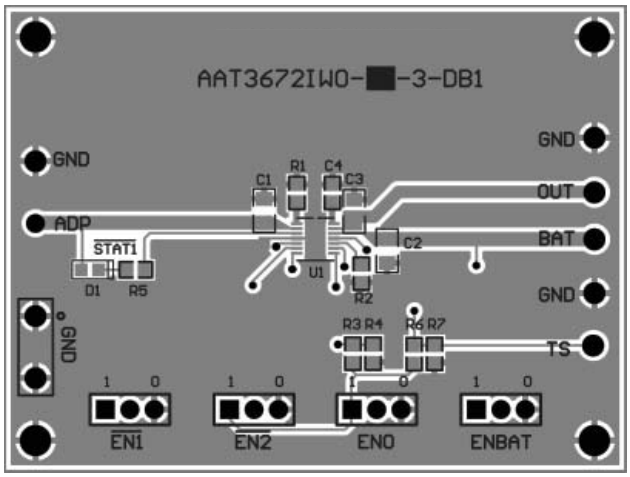

Figure 8: AAT3672-3 Evaluation Board Top Layer.

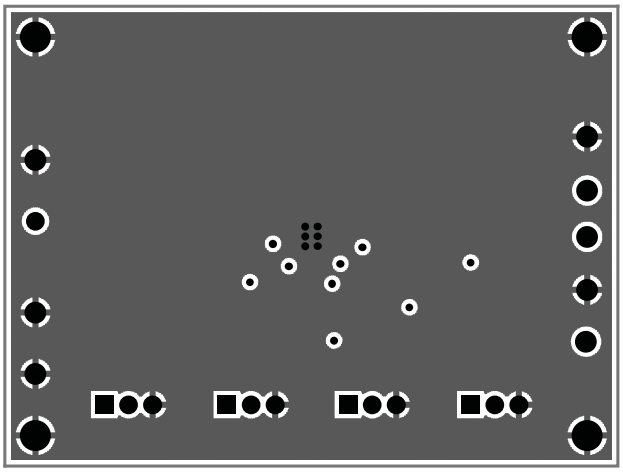

Figure 9: AAT3672-3 Evaluation Board Mid1 Layer.

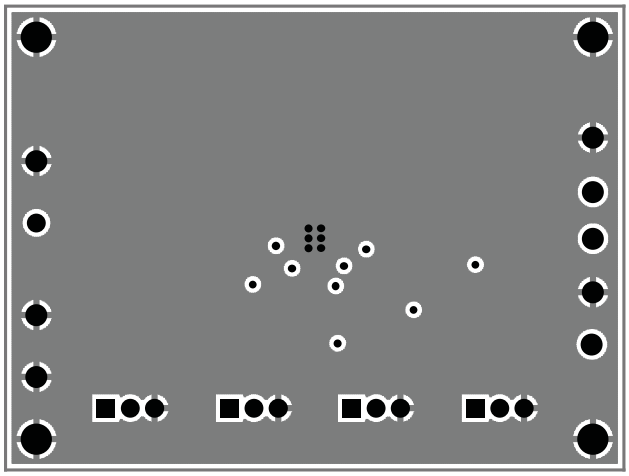

Figure 10: AAT3672-3 Evaluation Board Mid2 Layer.

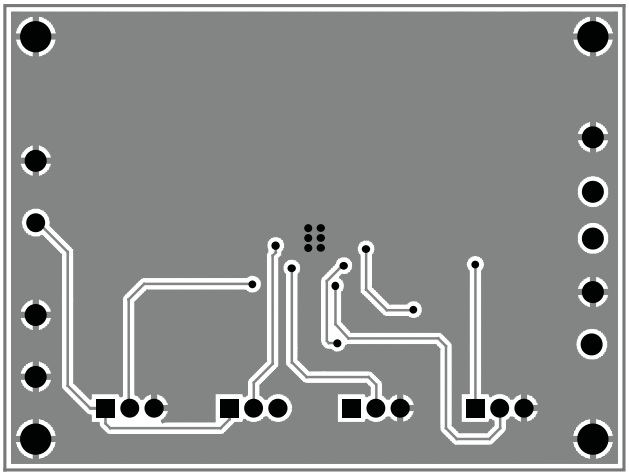

Figure 11: AAT3672-3 Evaluation Board Bottom Layer.

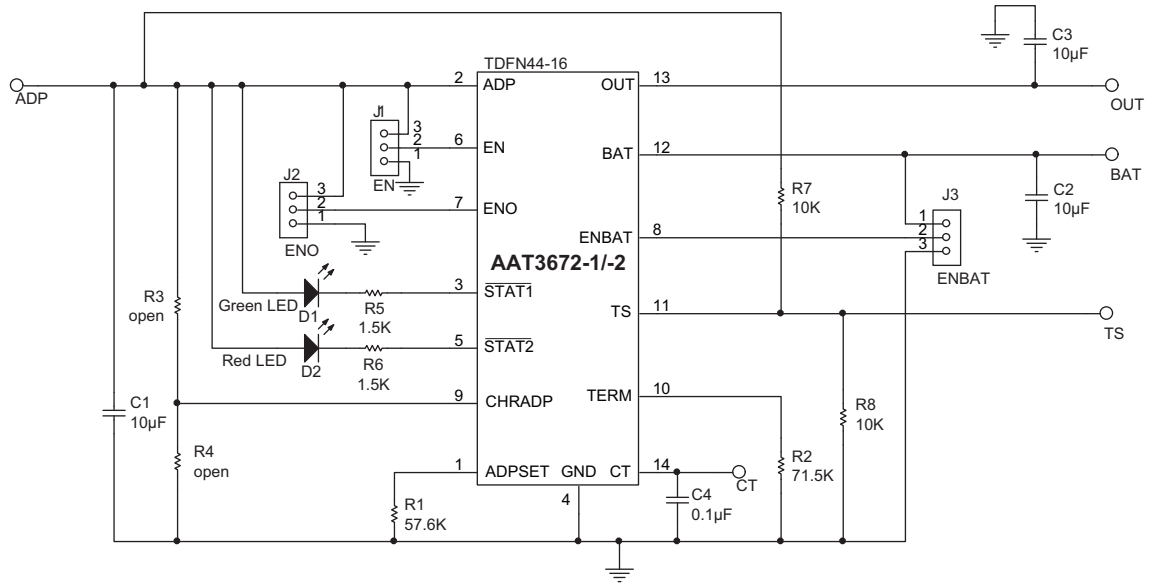

Figure 12: AAT3672-1/-2 Evaluation Board Schematic.

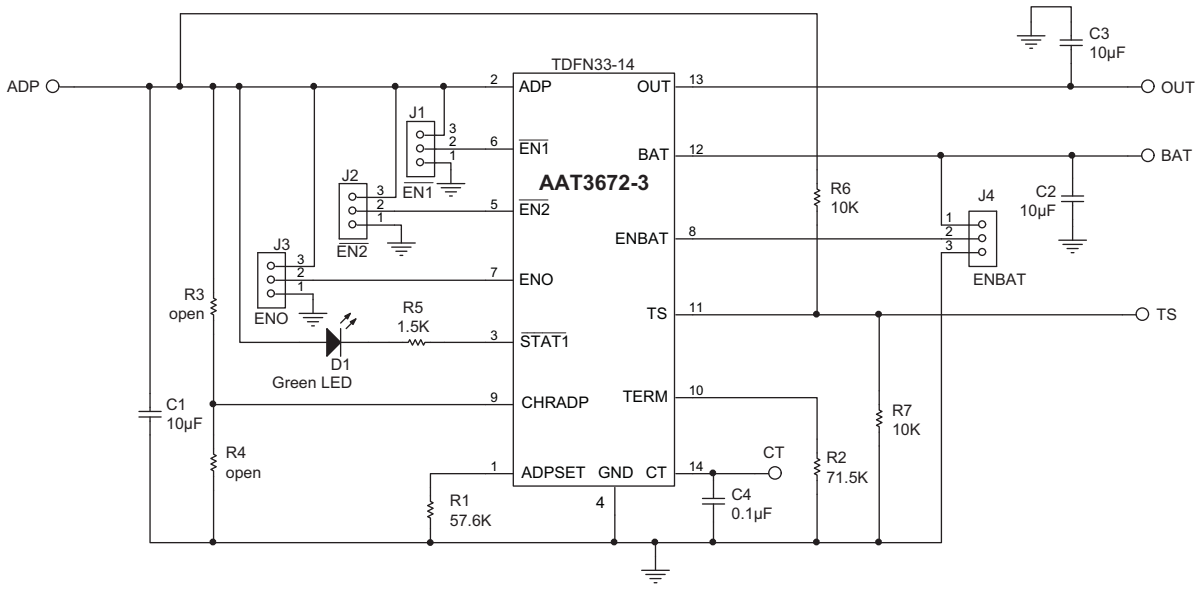

Figure 13: AAT3672-3 Evaluation Board Schematic.

Component	Part Number	Description	Manufacturer
U1	AAT3672-1/-2IWP	1.6A Linear Li-Ion/Polymer Battery Charger in TDFN33-12 Package	Skyworks
R1	Chip Resistor	57.6kΩ, 1%, 1/4W; 0603	Vishay
R2	Chip Resistor	71.5kΩ, 5%, 1/4W; 0603	
R5, R6	Chip Resistor	1.5kΩ, 5%, 1/4W; 0603	
R7, R8	Chip Resistor	10kΩ, 5%, 1/4W; 0603	
C4	GRM188R61A225KE34	0.1μF 10V 10% X5R 0603	Murata
C1, C2, C3	GRM21BR71A106KE51L	10μF 10V 10% X7R 0805	
J1, J2, J3	PRPN401PAEN	Conn. Header, 2mm zip	Sullins Electronics
D1	LTST-C190GKT	Green LED; 0603	Lite-On Inc.
D2	LTST-C190CKT	Red LED; 0603	

Table 8: AAT3672-1/-2 Evaluation Board Bill of Materials (BOM).

Component	Part Number	Description	Manufacturer
U1	AAT3672-3IWP	1.6A Linear Li-Ion/Polymer Battery Charger in TDFN33-12 Package	Skyworks
R1	Chip Resistor	57.6kΩ, 1%, 1/4W; 0603	Vishay
R2	Chip Resistor	71.5kΩ, 5%, 1/4W; 0603	
R5	Chip Resistor	1.5kΩ, 5%, 1/4W; 0603	
R6, R7	Chip Resistor	10kΩ, 5%, 1/4W; 0603	
C4	GRM188R61A225KE34	0.1μF 10V 10% X5R 0603	Murata
C1, C2, C3	GRM21BR71A106KE51L	10μF 10V 10% X7R 0805	
J1, J2, J3, J4	PRPN401PAEN	Conn. Header, 2mm zip	Sullins Electronics
D1	LTST-C190GKT	Green LED; 0603	Lite-On Inc.

Table 9: AAT3672-3 Evaluation Board Bill of Materials (BOM).

Ordering Information

Package	Marking[1]	Part Number (Tape and Reel)[2]
TDFN33-14	4RXYY	**AAT3672IWO-4.2-1-T1**
TDFN33-14	3SXYY	**AAT3672IWO-4.2-2-T1**
TDFN33-14	4QXYY	**AAT3672IWO-4.2-3-T1**

Skyworks Green™ products are compliant with all applicable legislation and are halogen-free. For additional information, refer to *Skyworks Definition of Green™*, document number SQ04-0074.

Packaging Information

TDFN33-14[3]

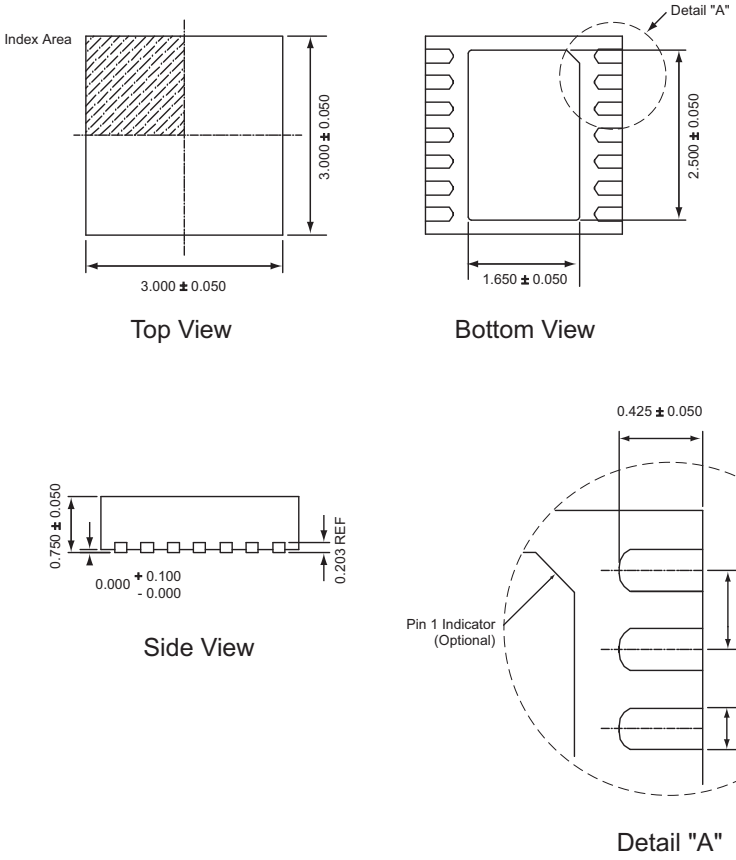

1. XYY = assembly and date code.
2. Sample stock is generally held on part numbers listed in **BOLD**.
3. The leadless package family, which includes QFN, TQFN, DFN, TDFN and STDFN, has exposed copper (unplated) at the end of the lead terminals due to the manufacturing process. A solder fillet at the exposed copper edge cannot be guaranteed and is not required to ensure a proper bottom solder connection.

Copyright © 2012 Skyworks Solutions, Inc. All Rights Reserved.

Information in this document is provided in connection with Skyworks Solutions, Inc. ("Skyworks") products or services. These materials, including the information contained herein, are provided by Skyworks as a service to its customers and may be used for informational purposes only by the customer. Skyworks assumes no responsibility for errors or omissions in these materials or the information contained herein. Skyworks may change its documentation, products, services, specifications or product descriptions at any time, without notice. Skyworks makes no commitment to update the materials or information and shall have no responsibility whatsoever for conflicts, incompatibilities, or other difficulties arising from any future changes.

No license, whether express, implied, by estoppel or otherwise, is granted to any intellectual property rights by this document. Skyworks assumes no liability for any materials, products or information provided hereunder, including the sale, distribution, reproduction or use of Skyworks products, information or materials, except as may be provided in Skyworks Terms and Conditions of Sale.

THE MATERIALS, PRODUCTS AND INFORMATION ARE PROVIDED "AS IS" WITHOUT WARRANTY OF ANY KIND, WHETHER EXPRESS, IMPLIED, STATUTORY, OR OTHERWISE, INCLUDING FITNESS FOR A PARTICULAR PURPOSE OR USE, MERCHANTABILITY, PERFORMANCE, QUALITY OR NON-INFRINGEMENT OF ANY INTELLECTUAL PROPERTY RIGHT; ALL SUCH WARRANTIES ARE HEREBY EXPRESSLY DISCLAIMED. SKYWORKS DOES NOT WARRANT THE ACCURACY OR COMPLETENESS OF THE INFORMATION, TEXT, GRAPHICS OR OTHER ITEMS CONTAINED WITHIN THESE MATERIALS. SKYWORKS SHALL NOT BE LIABLE FOR ANY DAMAGES, INCLUDING BUT NOT LIMITED TO ANY SPECIAL, INDIRECT, INCIDENTAL, STATUTORY, OR CONSEQUENTIAL DAMAGES, INCLUDING WITHOUT LIMITATION, LOST REVENUES OR LOST PROFITS THAT MAY RESULT FROM THE USE OF THE MATERIALS OR INFORMATION, WHETHER OR NOT THE RECIPIENT OF MATERIALS HAS BEEN ADVISED OF THE POSSIBILITY OF SUCH DAMAGE.

Skyworks products are not intended for use in medical, lifesaving or life-sustaining applications, or other equipment in which the failure of the Skyworks products could lead to personal injury, death, physical or environmental damage. Skyworks customers using or selling Skyworks products for use in such applications do so at their own risk and agree to fully indemnify Skyworks for any damages resulting from such improper use or sale.

Customers are responsible for their products and applications using Skyworks products, which may deviate from published specifications as a result of design defects, errors, or operation of products outside of published parameters or design specifications. Customers should include design and operating safeguards to minimize these and other risks. Skyworks assumes no liability for applications assistance, customer product design, or damage to any equipment resulting from the use of Skyworks products outside of stated published specifications or parameters.

Skyworks, the Skyworks symbol, and "Breakthrough Simplicity" are trademarks or registered trademarks of Skyworks Solutions, Inc., in the United States and other countries. Third-party brands and names are for identification purposes only, and are the property of their respective owners. Additional information, including relevant terms and conditions, posted at www.skyworksinc.com, are incorporated by reference.